# CD74HC4538-Q1 Automotive High-Speed CMOS Logic Dual Retriggerable Precision Monostable Multivibrator

## 1 Features

- Qualified for automotive applications
- Qualified for automotive applications retriggerable/ resettable capability
- Trigger and reset propagation delays independent of $R_X$, $C_X$
- Triggering from the leading or trailing edge
- Q and $\overline{Q}$ buffered outputs available
- Separate resets
- Wide range of output pulse widths
- Schmitt-Trigger input on A and $\overline{B}$ inputs
- Retrigger time is independent of $C_X$
- Fanout (over temperature range)
  - Standard outputs 10 LSTTL loads
  - Bus driver outputs 15 LSTTL loads
- Balanced propagation delay and transition times
- Significant power reduction compared to LSTTL logic ICs
- $V_{CC}$ voltage = 2V to 6V
- High noise immunity $N_{IL}$ or $N_{IH}$ = 30% of $V_{CC}$, $V_{CC}$ = 5V

## 2 Description

The CD74HC4538 is a dual retriggerable/resettable precision monostable multivibrator for fixed-voltage timing applications.

**Package Information**

| PART NUMBER | PACKAGE(1) | PACKAGE SIZE(2) | BODY SIZE |
|---|---|---|---|
| CD74HC4538-Q1 | D (SOIC, 16) | 9.9mm × 6mm | 9.9mm x 3.90mm |
| | PW (TSSOP, 16) | 5mm × 6.4mm | 5.00mm x 4.40mm |

(1) For more information, see Mechanical, Packaging, and Orderable Information.
(2) The package size (length × width) is a nominal value and includes pins, where applicable.
(3) The body size (length × width) is a nominal value and does not include pins.

An IMPORTANT NOTICE at the end of this data sheet addresses availability, warranty, changes, use in safety-critical applications, intellectual property matters and other important disclaimers. PRODUCTION DATA.

# Table of Contents

**1 Features**....1
**2 Description**....1
**3 Pin Configuration and Functions**....3
**4 Specifications**....4
4.1 Absolute Maximum Ratings....4
4.2 ESD Ratings....4
4.3 Recommended Operating Conditions....4
4.4 Thermal Information....5
4.5 Electrical Characteristics....5
4.6 Timing Requirements....5
4.7 Switching Characteristics....6
4.8 Operating Characteristics....6
4.9 Typical Characteristics....6
**5 Parameter Measurement Information**....8
**6 Detailed Description**....9
6.1 Overview....9
6.2 Functional Block Diagram....9
6.3 Device Functional Modes....10
**7 Application and Implementation**....11
7.1 Typical Application....11
7.2 Power Supply Recommendations....11
7.3 Layout....11
**8 Device and Documentation Support**....13
8.1 Documentation Support (Analog)....13
8.2 Receiving Notification of Documentation Updates....13
8.3 Support Resources....13
8.4 Trademarks....13
8.5 Electrostatic Discharge Caution....13
8.6 Glossary....13
**9 Revision History**....13
**10 Mechanical, Packaging, and Orderable Information**....13


Copyright © 2024 Texas Instruments Incorporated

## 3 Pin Configuration and Functions

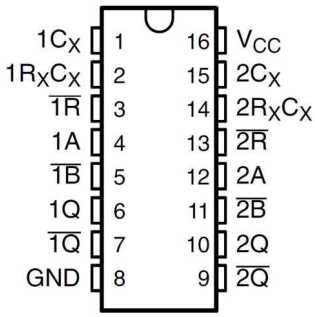


**Figure 3-1. D or PW Package; 16-Pin SOIC or TSSOP (Top View)**

**Table 3-1. Pin Functions**

| PIN | | TYPE | DESCRIPTION |
|---|---|---|---|
| NAME | NO. | | |
| $1C_X$ | 1 | — | Connects to external capacitor |
| $1R_XC_X$ | 2 | — | Connects to external capacitor and resistor |
| 1 $\overline{1R}$ | 3 | — | Connects to external resistor |
| 1A | 4 | I | Ch1 Rising edge input |
| 1B | 5 | I | Ch1 Falling edge input |
| 1Q | 6 | O | Ch1 Output |
| $\overline{1Q}$ | 7 | O | Ch1 Inverted Output |
| GND | 8 | — | Ground |
| $\overline{2Q}$ | 9 | O | Ch2 Inverted Output |
| 2Q | 10 | O | Ch2 Output |
| $\overline{2B}$ | 11 | I | Ch2 Falling edge input |
| 2A | 12 | I | Ch2 Rising edge input |
| 2R | 13 | — | Connects to external resistor |
| $2R_XC_X$ | 14 | — | Connects to external capacitor and resistor |
| $2C_X$ | 15 | — | Connects to external capacitor |
| $V_{CC}$ | 16 | — | Power Pin |

Copyright © 2024 Texas Instruments Incorporated

# 4 Specifications

## 4.1 Absolute Maximum Ratings

over operating free-air temperature (unless otherwise noted)[1]

| | | | MIN | MAX | UNIT |
|---|---|---|---|---|---|
| $V_{CC}$ | Supply voltage[2] | | –0.5 | 7 | V |
| $I_{IK}$ | Input clamp current | ($V_I$ < −0.5V or $V_I$ > $V_{CC}$ + 0.5V) | | ±20 | mA |
| $I_{OK}$ | Output clamp current | ($V_O$ < −0.5V or $V_O$ > $V_{CC}$ + 0.5V) | | ±20 | mA |
| $I_O$ | Switch current per output pin | ($V_O$ > −0.5V or $V_O$ < $V_{CC}$ + 0.5V) | | ±25 | mA |
| | Continuous current through $V_{CC}$ or GND | | | ±50 | mA |
| $T_J$ | Maximum junction temperature | | | 150 | °C |
| $T_{stg}$ | Storage temperature range | | –65 | 150 | °C |

(1) Stresses beyond those listed under "absolute maximum ratings" may cause permanent damage to the device. These are stress ratings only, and functional operation of the device at these or any other conditions beyond those indicated under "recommended operating conditions" is not implied. Exposure to absolute-maximum-rated conditions for extended periods may affect device reliability.
(2) All voltages are referenced to GND, unless otherwise specified.

## 4.2 ESD Ratings

| | | | VALUE | UNIT |
|---|---|---|---|---|
| $V_{(ESD)}$ | Electrostatic discharge | Human body model (HBM), per AEC Q100-002[1] | ±1500 | V |
| | | Charged device model (CDM), per AEC Q100-011 | ±250 | |

(1) AEC Q100-002 indicates that HBM stressing must be in accordance with the ANSI/ESDA/JEDEC JS-001 specification.

## 4.3 Recommended Operating Conditions

over operating free-air temperature (unless otherwise noted)

| | | | | MIN | MAX | UNIT |
|---|---|---|---|---|---|---|
| $V_{CC}$ | Supply voltage | | | 2 | 6 | V |
| $V_{IH}$ | High-level input voltage | | $V_{CC}$ = 2V | 1.5 | | V |
| | | | $V_{CC}$ = 4.5V | 3.15 | | |
| | | | $V_{CC}$ = 6V | 4.2 | | |
| $V_{IL}$ | Low-level input voltage | | $V_{CC}$ = 2V | | 0.5 | V |
| | | | $V_{CC}$ = 4.5V | | 1.35 | |
| | | | $V_{CC}$ = 6V | | 1.8 | |
| $V_I$ | Input voltage | | | 0 | $V_{CC}$ | V |
| $V_O$ | Output voltage | | | 0 | $V_{CC}$ | V |
| $t_t$ | Input transition (rise and fall) time | Reset input | $V_{CC}$ = 2V | 0 | 1000 | ns |
| | | | $V_{CC}$ = 4.5V | 0 | 500 | |
| | | | $V_{CC}$ = 6V | 0 | 400 | |
| | | Trigger inputs A or $\overline{B}$ | $V_{CC}$ = 2V | 0 | Unlimited | |
| | | | $V_{CC}$ = 4.5V | 0 | Unlimited | |
| | | | $V_{CC}$ = 6V | 0 | Unlimited | |
| $R_X$ | External timing resistor[1] | | | 5 | | kΩ |
| $C_X$ | External timing capacitor[1] | | | 0 | | F |
| $T_A$ | Operating free-air temperature | | | –40 | 125 | °C |

(1) All unused inputs of the device must be held at $V_{CC}$ or GND to ensure proper device operation. Refer to the TI application report, *Implications of Slow or Floating CMOS Inputs*, literature number SCBA004.


Copyright © 2024 Texas Instruments Incorporated

## 4.4 Thermal Information

| THERMAL METRIC[1] | | CD74HC4538-Q1 | | UNIT |
|---|---|---|---|---|
| | | D | PW | |
| | | 16 PINS | | |
| $R_{\theta JA}$ | Junction-to-ambient thermal resistance | 73 | 108 | °C/W |

(1) For more information about traditional and new thermal metrics, see the *IC Package Thermal Metrics* application report (SPRA953).

## 4.5 Electrical Characteristics

over recommended operating free-air temperature range (unless otherwise noted)

| PARAMETER | TEST CONDITIONS | | $I_O$mA | $V_{CC}$ | $T_A$ = 25°C | | $T_A$ = −40°C TO 85°C | | $T_A$ = −40°C TO 125°C | | UNIT |
|---|---|---|---|---|---|---|---|---|---|---|---|
| | | | | | MIN | MAX | MIN | MAX | MIN | MAX | |
| $V_{OH}$ | $V_I = V_{IH}$ or $V_{IL}$ | CMOS loads | −0.02 | 2 V | 1.9 | | 1.9 | | 1.9 | | V |
| | | | | 4.5 V | 4.4 | | 4.4 | | 4.4 | | |
| | | | | 6 V | 5.9 | | 5.9 | | 5.9 | | |
| | | TTL loads | − 4 | 4.5 V | 3.98 | | 3.84 | | 3.7 | | |
| | | | −5.2 | 6 V | 5.48 | | 5.34 | | 5.2 | | |
| $V_{OL}$ | $V_I = V_{IH}$ or $V_{IL}$ | CMOS loads | 0.02 | 2 V | | 0.1 | | 0.1 | | 0.1 | V |
| | | | | 4.5 V | | 0.1 | | 0.1 | | 0.1 | |
| | | | | 6 V | | 0.1 | | 0.1 | | 0.1 | |
| | | TTL loads | 4 | 4.5 V | | 0.26 | | 0.33 | | 0.4 | |
| | | | 5.2 | 6 V | | 0.26 | | 0.33 | | 0.4 | |
| $I_I$ | $V_I = V_{CC}$ or GND | A, $\overline{B}$, R | | 6 V | | ±1 | | ±1 | | ±1 | µA |
| | | $R_XC_X$ [1] | | 6 V | | ±0.05 | | ±0.05 | | ±0.05 | |
| $I_{CC}$ | $V_I = V_{CC}$ or GND | Quiescent | 0 | 6 V | | 8 | | 80 | | 160 | µA |
| | | Active, Q = high, Pins 2 and 14 at $V_{CC}/4$ | 0 | 6 V | | 0.6 | | 0.8 | | 1 | mA |
| $C_{IN}$ | $C_L$ = 50 pF | | | | | 10 | | 10 | | 10 | pF |

(1) When testing $I_{IL}$, the Q output must be high. If Q is low (device not triggered), the pullup P device is ON and the low-resistance path from $V_{DD}$ to the test pin causes a current far exceeding the specification.

## 4.6 Timing Requirements

over recommended operating free-air temperature range, $V_{CC}$ = 5 V ± 0.5 V (unless otherwise noted) (see Load Circuit and Voltage Waveforms)

| PARAMETER | | $V_{CC}$ | $T_A$ = 25°C | | | $T_A$ = −40°C TO 85°C | | $T_A$ = −40°C TO 125°C | | UNIT |
|---|---|---|---|---|---|---|---|---|---|---|
| | | | MIN | TYP | MAX | MIN | MAX | MIN | MAX | |
| $t_w$ | Input pulse width | 2 V | 80 | | | 100 | | 120 | | ns |
| | | 4.5 V | 16 | | | 20 | | 24 | | |
| | | 6 V | 14 | | | 17 | | 20 | | |
| $t_{su}$ | Reset setup time | 2 V | 5 | | | 5 | | 5 | | ns |
| | | 4.5 V | 5 | | | 5 | | 5 | | |
| | | 6 V | 5 | | | 5 | | 5 | | |
| $t_{rr}$ | Retrigger time | 5 V | | 175 | | | | | | ns |
| | Output pulse-width match, same package | | | ± 1 | | | | | | % |

## 4.7 Switching Characteristics

over recommended operating free-air temperature range, $V_{CC}$ = 5 V ± 0.5 V (unless otherwise noted) (see Load Circuit and Voltage Waveforms)

| PARAMETER | FROM (INPUT) | TO (OUTPUT) | LOAD CAPACITANCE | $V_{CC}$ | $T_A$ = 25°C | | | $T_A$ = −40°C TO 85°C | | $T_A$ = −40°C TO 125°C | | UNIT |
|---|---|---|---|---|---|---|---|---|---|---|---|---|
| | | | | | MIN | TYP | MAX | MIN | MAX | MIN | MAX | |
| $t_{pd}$ | A, $\overline{B}$ | Q or $\overline{Q}$ | $C_L$ = 50 pF | 2 V | | | 250 | | 315 | | 375 | ns |
| | | | | 4.5 V | | | 50 | | 63 | | 75 | |
| | | | | 6 V | | | 43 | | 54 | | 64 | |
| | | | $C_L$ = 15 pF | 5 V | | 21 | | | | | | |
| | $\overline{R}$ | Q or $\overline{Q}$ | $C_L$ = 50 pF | 2 V | | | 250 | | 315 | | 375 | ns |
| | | | | 4.5 V | | | 50 | | 63 | | 75 | |
| | | | | 6 V | | | 43 | | 54 | | 64 | |
| | | | $C_L$ = 15 pF | 5 V | | 21 | | | | | | |
| $t_t$ | | | $C_L$ = 50 pF | 2 V | | | 75 | | 95 | | 110 | ns |
| | | | | 4.5 V | | | 15 | | 19 | | 22 | |
| | | | | 6 V | | | 13 | | 16 | | 19 | |
| $\tau$(1) | | | $C_L$ = 50 pF | 3 V | 0.64 | | 0.78 | 0.612 | 0.812 | 0.605 | 0.819 | ms |
| | | | | 5 V | 0.63 | | 0.77 | 0.602 | 0.798 | 0.595 | 0.805 | |

(1) Output pulse width with $R_X$ = 10 kΩ and $C_X$ = 0.1 µF

## 4.8 Operating Characteristics

$V_{CC}$ = 5 V, $T_A$ = 25°C, input $t_r$, $t_f$ = 6 ns, $C_L$ = 15 pF

| PARAMETER | | TYP | UNIT |
|---|---|---|---|
| $C_{pd}$ | Power dissipation capacitance | 136 | pF |

**Note**

- $C_{pd}$ is used to determine the dynamic power consumption, per one shot.
- $P_D = (C_{pd} + C_X)\ V_{CC}\ 2\ f_I\ \Sigma(C_L\ V_{CC}\ 2\ f_O)$
- $f_I$ = input frequency
- $f_O$ = output frequency
- $C_L$ = output load capacitance
- $C_X$ = external capacitance
- $V_{CC}$ = supply voltage, assuming $f_I$ l/τ

## 4.9 Typical Characteristics

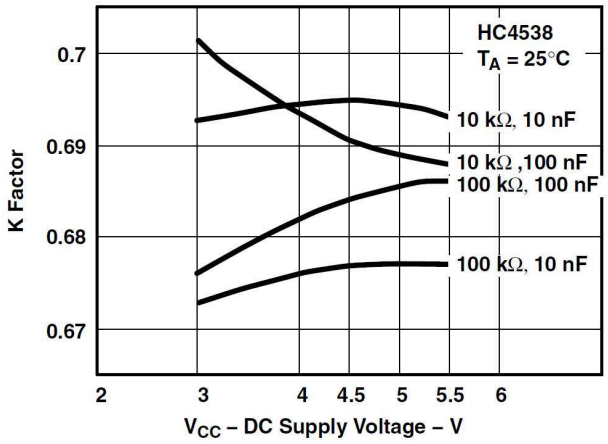


Figure 4-1. K Factor vs DC Supply Voltage

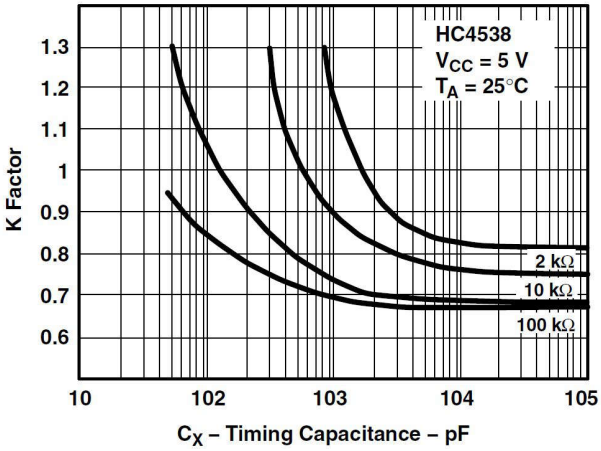


Figure 4-2. K Factor vs $C_X$


Copyright © 2024 Texas Instruments Incorporated

## 4.9 Typical Characteristics (continued)

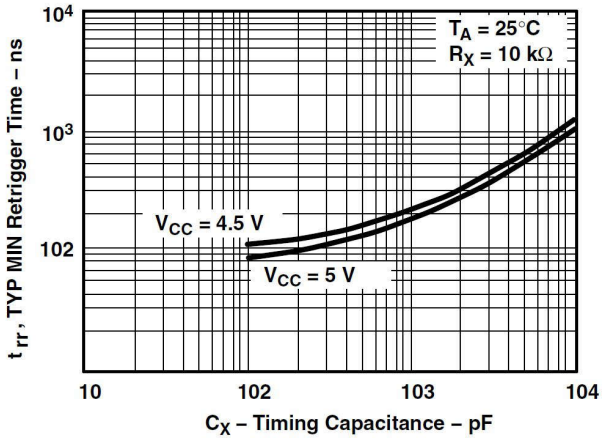


**Figure 4-3. Minimum Retrigger Time vs Timing Capacitance**

# 5 Parameter Measurement Information

## Load Circuit and Voltage Waveforms

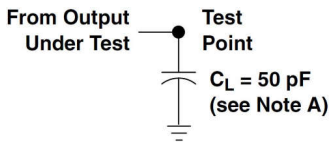


**Figure 5-1. Load Circuit**

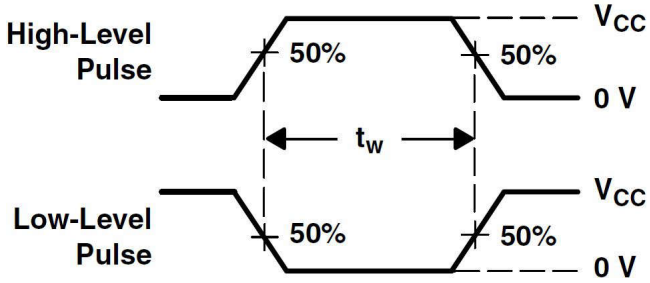


**Figure 5-2. Voltage Waveforms Pulse Durations**

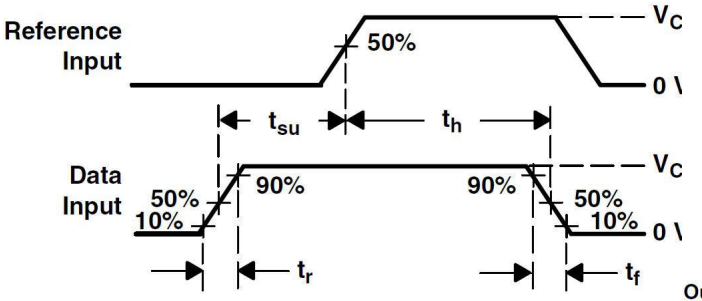


**Figure 5-3. Voltage Waveforms Setup and Hold and Input Rise and Fall Times**

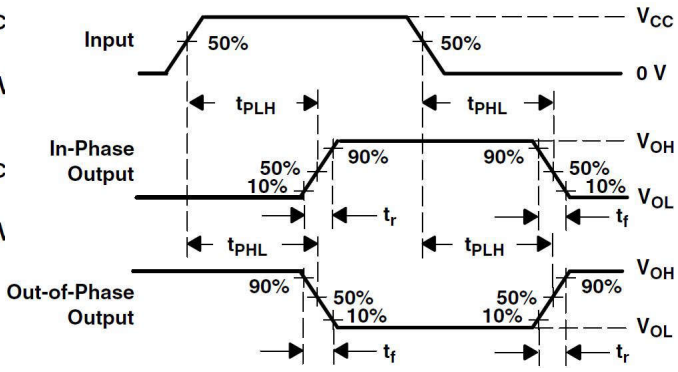


**Figure 5-4. Voltage Waveforms Propagation Delay and Output Transition Times**

**Note**

- $C_L$ includes probe and test-fixture capacitance.
- Phase relationships between waveforms were chosen arbitrarily. All input pulses are supplied by generators having the following characteristics: PRR ≤ 1 MHz, $Z_O$ = 50 Ω, $t_r$ = 6 ns, $t_f$ = 6 ns.
- For clock inputs, $f_{max}$ is measured when the input duty cycle is 50%.
- The outputs are measured one at a time, with one input transition per measurement.
- $t_{PLH}$ and $t_{PHL}$ are the same as $t_{pd}$.


Copyright © 2024 Texas Instruments Incorporated

# 6 Detailed Description

## 6.1 Overview

An external resistor ($R_X$) and external capacitor ($C_X$) control the timing and accuracy for the circuit. Adjustment of $R_X$ and $C_X$ provides a wide range of output pulse widths from the Q and $\overline{Q}$ terminals. The propagation delay from trigger input-to-output transition and the propagation delay from reset input-to-output transition are independent of $R_X$ and $C_X$.

Leading-edge triggering (A) and trailing-edge triggering ($\overline{B}$) inputs are provided for triggering from either edge of the input pulse. An unused A input should be tied to GND and an unused $\overline{B}$ input should be tied to $V_{CC}$. On power up, the IC is reset. Unused resets and sections must be terminated. In normal operation, the circuit retriggers on the application of each new trigger pulse. To operate in the nontriggerable mode, $\overline{Q}$ is connected to $\overline{B}$ when leading-edge triggering (A) is used, or Q is connected to A when trailing-edge triggering ($\overline{B}$) is used. The period (τ) can be calculated from $\tau = (0.7)\ R_X, C_X$; $R_{MIN}$ is 5 kΩ. $C_{MIN}$ is 0 pF.

## 6.2 Functional Block Diagram

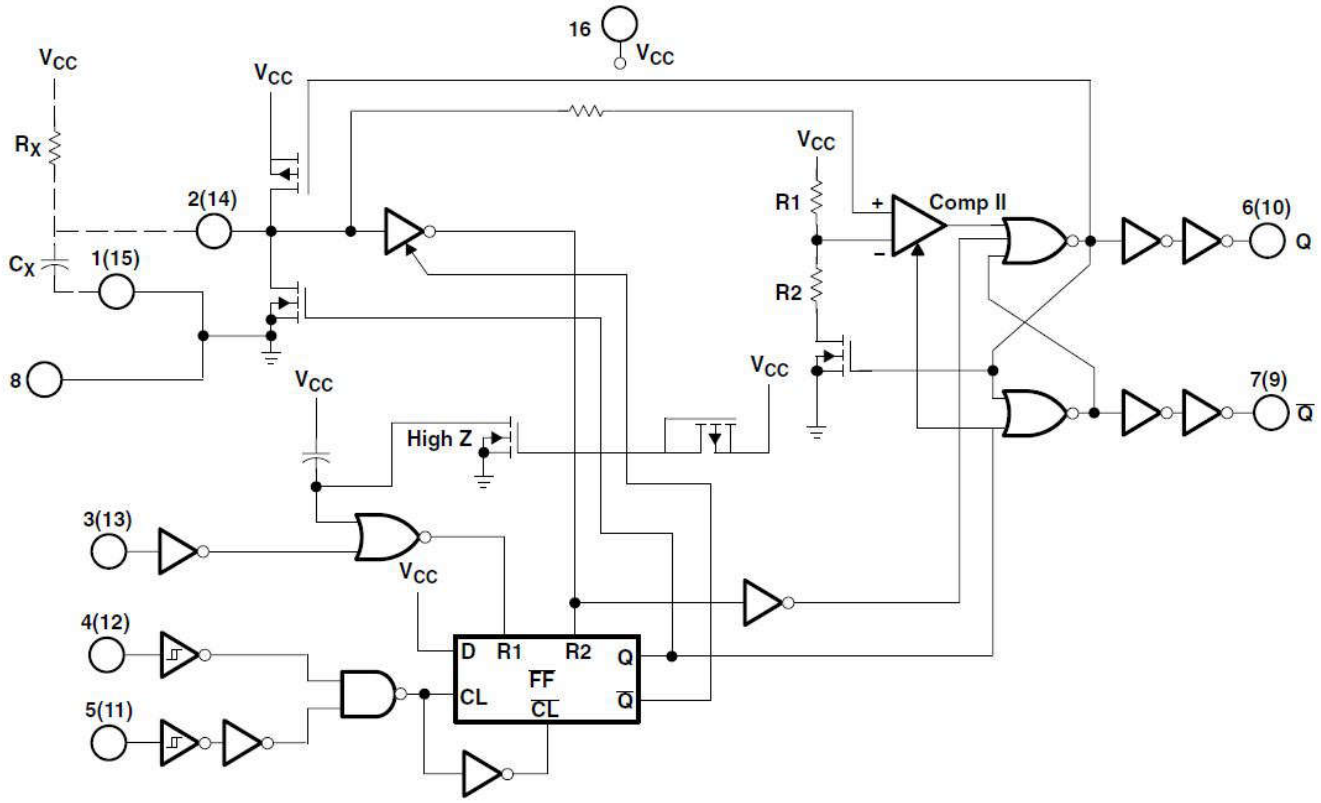


**Figure 6-1. Logic Diagram (Positive Logic)**

## 6.3 Device Functional Modes

**Table 6-1. Function Table**

| INPUTS | | | OUTPUTS | |
|---|---|---|---|---|
| $\overline{R}$ | A | $\overline{B}$ | Q | $\overline{Q}$ |
| L | X | X | L | H |
| X | H | X | L | H |
| X | X | L | L | H |
| H | L | ↓ | ⎍ | ⎏ |
| H | ↑ | H | ⎍ | ⎏ |

**Table 6-2. Functional Terminal Connections**

| FUNCTION | $V_{CC}$ TO TERMINAL NUMBER | | GND TO TERMINAL NUMBER | | INPUT PULSE TO TERMINAL NUMBER | | OTHER CONNECTIONS | |
|---|---|---|---|---|---|---|---|---|
| | MONO(1) | MONO(2) | MONO(1) | MONO(2) | MONO(1) | MONO(2) | MONO(1) | MONO(2) |
| Leading-edge trigger/ retriggerable | 3, 5 | 11, 13 | | | 4 | 12 | | |
| Leading-edge trigger/ nonretriggerable | 3 | 13 | | | 4 | 12 | 5−7 | 11−9 |
| Trailing-edge trigger/ retriggerable | 3 | 13 | 4 | 12 | 5 | 11 | | |
| Trailing-edge trigger/ nonretriggerable | 3 | 13 | | | 5 | 11 | 4−6 | 12−10 |

(1) A retriggerable one-shot multivibrator has an output pulse width that is extended one full time period (T) after application of the last trigger pulse.
(2) A nontriggerable one-shot multivibrator has a time period (T) referenced from the application of the first trigger pulse.

**Input Pulse Train**

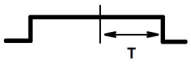


**Retriggerable Mode Pulse Width (A Mode)**

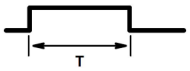


**Nonretriggerable Mode Pulse Width (A Mode)**


Copyright © 2024 Texas Instruments Incorporated

# 7 Application and Implementation

**Note**

Information in the following applications sections is not part of the TI component specification, and TI does not warrant its accuracy or completeness. TI's customers are responsible for determining suitability of components for their purposes, as well as validating and testing their design implementation to confirm system functionality.

## 7.1 Typical Application

### Power-Down Mode

During a rapid power-down condition (as would occur with a power-supply short circuit with a poorly filtered power supply), the energy stored in $C_X$ could discharge into pin 2 or pin 14. To avoid possible device damage in this mode when $C_X$ is \u0001 0.5 µF, a protection diode with a 1-A rating or higher (1N5395 or equivalent) and a separate ground return for $C_X$ should be provided. Rapid-Power-Down Protection Circuit

An alternate protection method is shown in Alternative Rapid-Power-Down Protection Circuit, where a 51-Ω current-limiting resistor is inserted in series with $C_X$ . Note that a small pulse-duration decrease occurs, however, and $R_X$ must be increased appropriately to obtain the originally desired pulse duration.

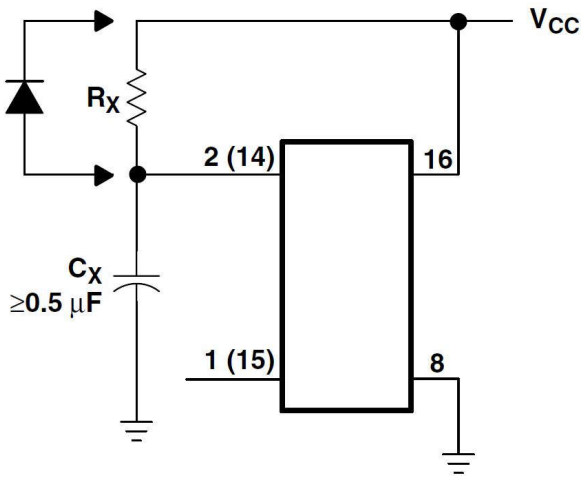


**Figure 7-1. Rapid-Power-Down Protection Circuit**

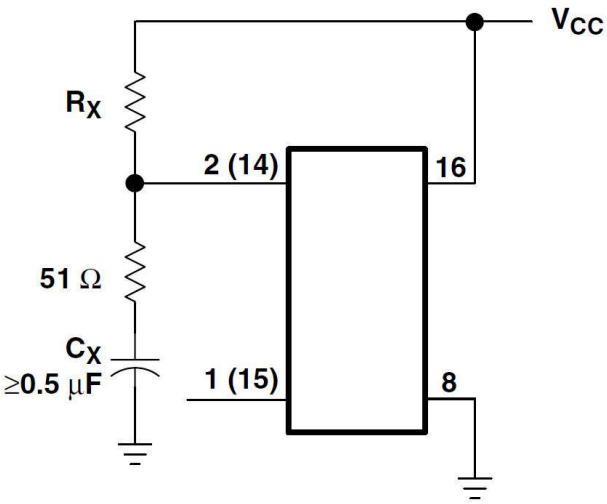


**Figure 7-2. Alternative Rapid-Power-Down Protection Circuit**

## 7.2 Power Supply Recommendations

The power supply can be any voltage between the minimum and maximum supply voltage rating located in the *Recommended Operating Conditions*. Each $V_{CC}$ terminal should have a good bypass capacitor to prevent power disturbance. A 0.1-µF capacitor is recommended for this device. It is acceptable to parallel multiple bypass capacitors to reject different frequencies of noise. The 0.1-µF and 1-µF capacitors are commonly used in parallel. The bypass capacitor should be installed as close to the power terminal as possible for best results, as shown in the following layout example.

## 7.3 Layout

### *7.3.1 Layout Guidelines*

When using multiple bit logic devices, inputs should not float. In many cases, functions or parts of functions of digital logic devices are unused. Some examples are when only two inputs of a triple-input AND gate are used,

or when only 3 of the 4-buffer gates are used. Such input pins should not be left unconnected because the undefined voltages at the outside connections result in undefined operational states.

Specified are rules that must be observed under all circumstances. All unused inputs of digital logic devices must be connected to a high or low bias to prevent them from floating. The logic level that should be applied to any particular unused input depends on the function of the device. Generally they will be tied to GND or $V_{CC}$, whichever makes more sense or is more convenient. It is acceptable to float outputs unless the part is a transceiver. If the transceiver has an output enable pin, it will disable the outputs section of the part when asserted. This will not disable the input section of the I/Os so they also cannot float when disabled.


Copyright © 2024 Texas Instruments Incorporated

# 8 Device and Documentation Support

## 8.1 Documentation Support (Analog)

### *8.1.1 Related Links*

The table below lists quick access links. Categories include technical documents, support and community resources, tools and software, and quick access to sample or buy.

**Table 8-1. Related Links**

| PARTS | PRODUCT FOLDER | SAMPLE & BUY | TECHNICAL DOCUMENTS | TOOLS & SOFTWARE | SUPPORT & COMMUNITY |
|---|---|---|---|---|---|
| CD74HC4538-Q1 | Click here | Click here | Click here | Click here | Click here |

## 8.2 Receiving Notification of Documentation Updates

To receive notification of documentation updates, navigate to the device product folder on ti.com. Click on *Notifications* to register and receive a weekly digest of any product information that has changed. For change details, review the revision history included in any revised document.

## 8.3 Support Resources

TI E2E™ support forums are an engineer's go-to source for fast, verified answers and design help — straight from the experts. Search existing answers or ask your own question to get the quick design help you need.

Linked content is provided "AS IS" by the respective contributors. They do not constitute TI specifications and do not necessarily reflect TI's views; see TI's Terms of Use.

## 8.4 Trademarks

TI E2E™ is a trademark of Texas Instruments.
All trademarks are the property of their respective owners.

## 8.5 Electrostatic Discharge Caution

This integrated circuit can be damaged by ESD. Texas Instruments recommends that all integrated circuits be handled with appropriate precautions. Failure to observe proper handling and installation procedures can cause damage.

ESD damage can range from subtle performance degradation to complete device failure. Precision integrated circuits may be more susceptible to damage because very small parametric changes could cause the device not to meet its published specifications.

## 8.6 Glossary

TI Glossary — This glossary lists and explains terms, acronyms, and definitions.

# 9 Revision History

**Changes from Revision A (April 2008) to Revision B (August 2024)** **Page**

- Added *Package Information* table, *Pin Functions* table, *ESD Ratings* table, *Thermal Information* table, *Device Functional Modes,*Application and Implementation section, *Device and Documentation Support* section, and *Mechanical, Packaging, and Orderable Information* section ..... 1

# 10 Mechanical, Packaging, and Orderable Information

The following pages include mechanical, packaging, and orderable information. This information is the most current data available for the designated devices. This data is subject to change without notice and revision of this document. For browser-based versions of this data sheet, refer to the left-hand navigation.

## PACKAGING INFORMATION

| Orderable part number | Status (1) | Material type (2) | Package \| Pins | Package qty \| Carrier | RoHS (3) | Lead finish/ Ball material (4) | MSL rating/ Peak reflow (5) | Op temp (°C) | Part marking (6) |
|---|---|---|---|---|---|---|---|---|---|
| CD74HC4538QM96G4Q1 | Active | Production | SOIC (D) \| 16 | 2500 \| LARGE T&R | Yes | NIPDAU | Level-1-260C-UNLIM | -40 to 125 | HC4538M |
| CD74HC4538QM96G4Q1.A | Active | Production | SOIC (D) \| 16 | 2500 \| LARGE T&R | Yes | NIPDAU | Level-1-260C-UNLIM | -40 to 125 | HC4538M |
| CD74HC4538QPWRG4Q1 | Active | Production | TSSOP (PW) \| 16 | 2000 \| LARGE T&R | Yes | NIPDAU | Level-1-260C-UNLIM | -40 to 125 | HC4538M |
| CD74HC4538QPWRG4Q1.A | Active | Production | TSSOP (PW) \| 16 | 2000 \| LARGE T&R | Yes | NIPDAU | Level-1-260C-UNLIM | -40 to 125 | HC4538M |
| CD74HC4538QPWRQ1 | Active | Production | TSSOP (PW) \| 16 | 2000 \| LARGE T&R | Yes | NIPDAU | Level-1-260C-UNLIM | -40 to 125 | HC4538M |
| CD74HC4538QPWRQ1.A | Active | Production | TSSOP (PW) \| 16 | 2000 \| LARGE T&R | Yes | NIPDAU | Level-1-260C-UNLIM | -40 to 125 | HC4538M |

(1) **Status:** For more details on status, see our product life cycle.

(2) **Material type:** When designated, preproduction parts are prototypes/experimental devices, and are not yet approved or released for full production. Testing and final process, including without limitation quality assurance, reliability performance testing, and/or process qualification, may not yet be complete, and this item is subject to further changes or possible discontinuation. If available for ordering, purchases will be subject to an additional waiver at checkout, and are intended for early internal evaluation purposes only. These items are sold without warranties of any kind.

(3) **RoHS values:** Yes, No, RoHS Exempt. See the TI RoHS Statement for additional information and value definition.

(4) **Lead finish/Ball material:** Parts may have multiple material finish options. Finish options are separated by a vertical ruled line. Lead finish/Ball material values may wrap to two lines if the finish value exceeds the maximum column width.

(5) **MSL rating/Peak reflow:** The moisture sensitivity level ratings and peak solder (reflow) temperatures. In the event that a part has multiple moisture sensitivity ratings, only the lowest level per JEDEC standards is shown. Refer to the shipping label for the actual reflow temperature that will be used to mount the part to the printed circuit board.

(6) **Part marking:** There may be an additional marking, which relates to the logo, the lot trace code information, or the environmental category of the part.

Multiple part markings will be inside parentheses. Only one part marking contained in parentheses and separated by a "~" will appear on a part. If a line is indented then it is a continuation of the previous line and the two combined represent the entire part marking for that device.

**Important Information and Disclaimer:**The information provided on this page represents TI's knowledge and belief as of the date that it is provided. TI bases its knowledge and belief on information provided by third parties, and makes no representation or warranty as to the accuracy of such information. Efforts are underway to better integrate information from third parties. TI has taken and continues to take reasonable steps to provide representative and accurate information but may not have conducted destructive testing or chemical analysis on incoming materials and chemicals. TI and TI suppliers consider certain information to be proprietary, and thus CAS numbers and other limited information may not be available for release.

In no event shall TI's liability arising out of such information exceed the total purchase price of the TI part(s) at issue in this document sold by TI to Customer on an annual basis.

**OTHER QUALIFIED VERSIONS OF CD74HC4538-Q1 :**

- Catalog : CD74HC4538
- Military : CD54HC4538

NOTE: Qualified Version Definitions:

- Catalog - TI's standard catalog product
- Military - QML certified for Military and Defense Applications

## TAPE AND REEL INFORMATION

**REEL DIMENSIONS**

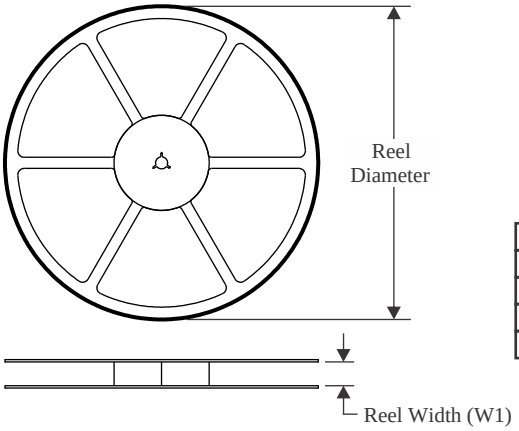


**TAPE DIMENSIONS**

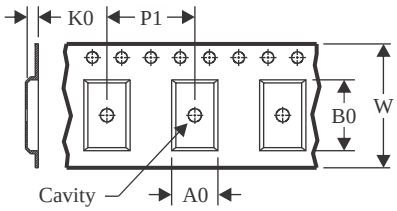


| | |
|---|---|
| A0 | Dimension designed to accommodate the component width |
| B0 | Dimension designed to accommodate the component length |
| K0 | Dimension designed to accommodate the component thickness |
| W | Overall width of the carrier tape |
| P1 | Pitch between successive cavity centers |

**QUADRANT ASSIGNMENTS FOR PIN 1 ORIENTATION IN TAPE**

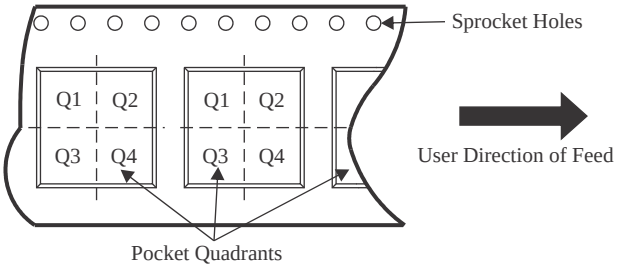


*All dimensions are nominal

| Device | Package Type | Package Drawing | Pins | SPQ | Reel Diameter (mm) | Reel Width W1 (mm) | A0 (mm) | B0 (mm) | K0 (mm) | P1 (mm) | W (mm) | Pin1 Quadrant |
|---|---|---|---|---|---|---|---|---|---|---|---|---|
| CD74HC4538QPWRG4Q1 | TSSOP | PW | 16 | 2000 | 330.0 | 12.4 | 6.9 | 5.6 | 1.6 | 8.0 | 12.0 | Q1 |
| CD74HC4538QPWRQ1 | TSSOP | PW | 16 | 2000 | 330.0 | 12.4 | 6.9 | 5.6 | 1.6 | 8.0 | 12.0 | Q1 |

TAPE AND REEL BOX DIMENSIONS

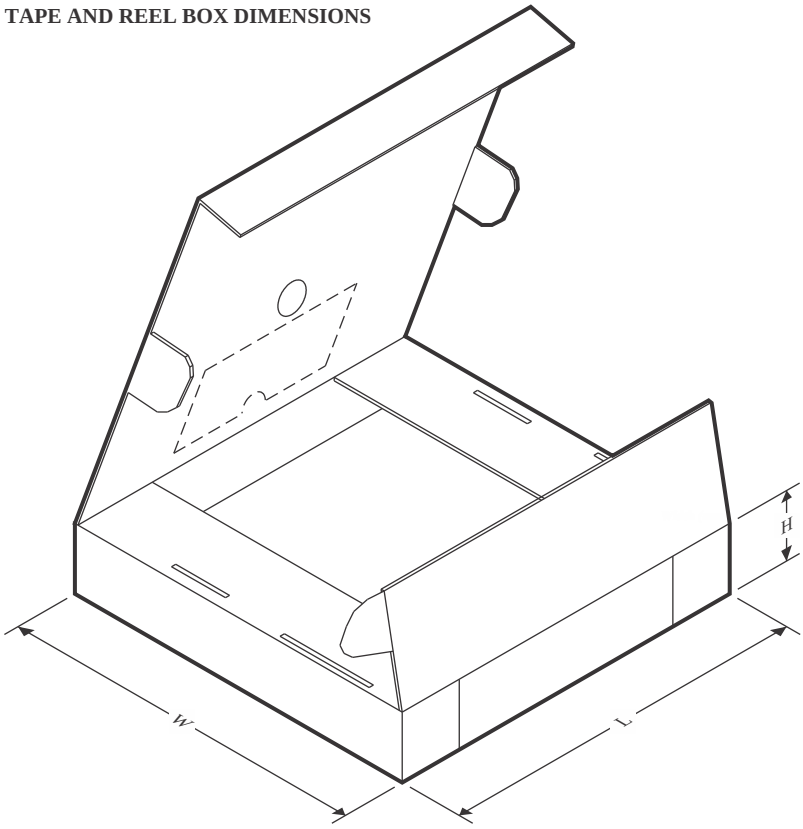


*All dimensions are nominal

| Device | Package Type | Package Drawing | Pins | SPQ | Length (mm) | Width (mm) | Height (mm) |
|---|---|---|---|---|---|---|---|
| CD74HC4538QPWRG4Q1 | TSSOP | PW | 16 | 2000 | 356.0 | 356.0 | 35.0 |
| CD74HC4538QPWRQ1 | TSSOP | PW | 16 | 2000 | 356.0 | 356.0 | 35.0 |

D (R–PDSO–G16) PLASTIC SMALL OUTLINE

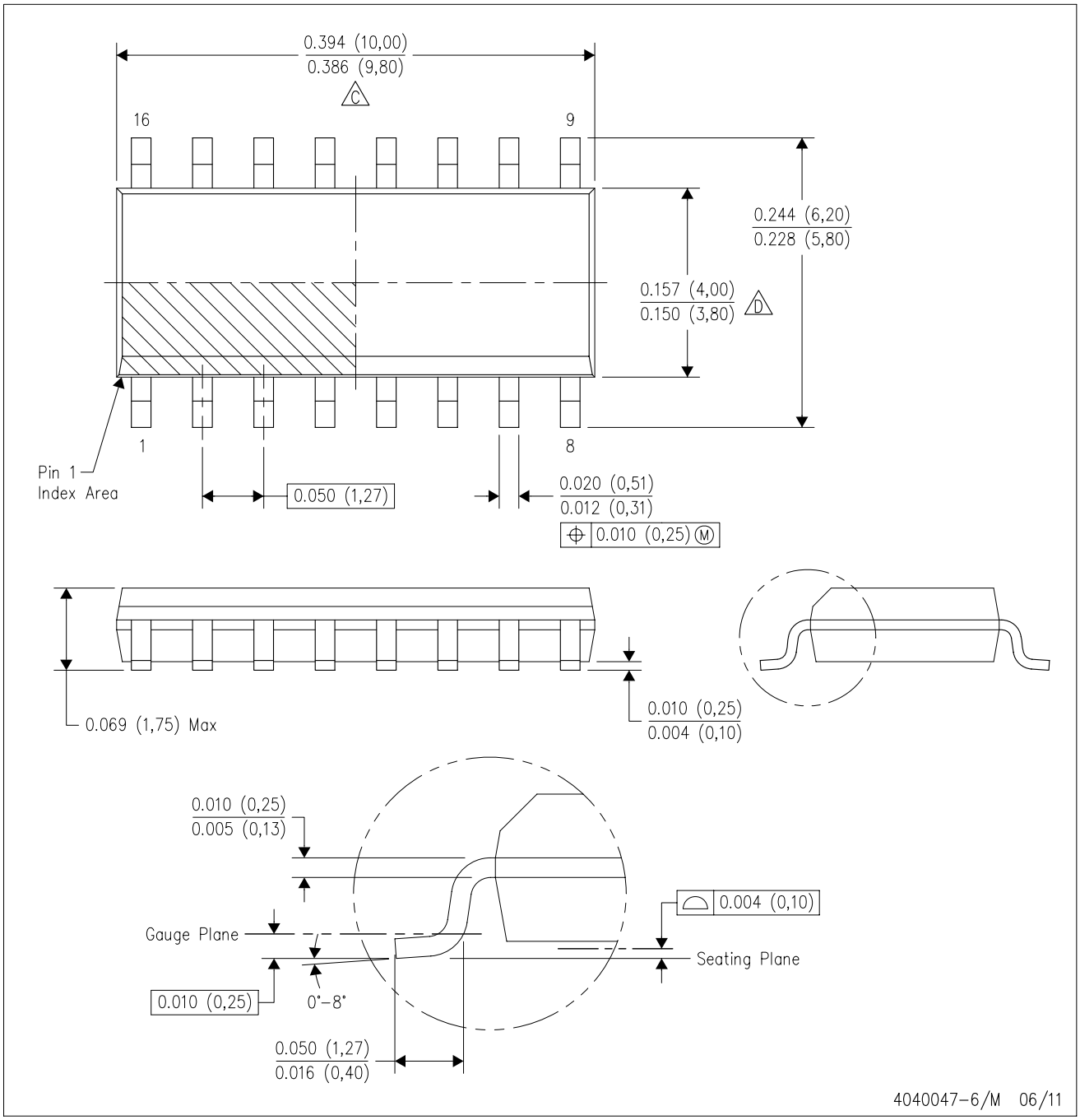


NOTES:
A. All linear dimensions are in inches (millimeters).
B. This drawing is subject to change without notice.
C. Body length does not include mold flash, protrusions, or gate burrs. Mold flash, protrusions, or gate burrs shall not exceed 0.006 (0,15) each side.
D. Body width does not include interlead flash. Interlead flash shall not exceed 0.017 (0,43) each side.
E. Reference JEDEC MS–012 variation AC.

# PW0016A

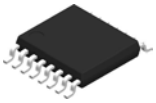

# PACKAGE OUTLINE

## TSSOP - 1.2 mm max height

SMALL OUTLINE PACKAGE

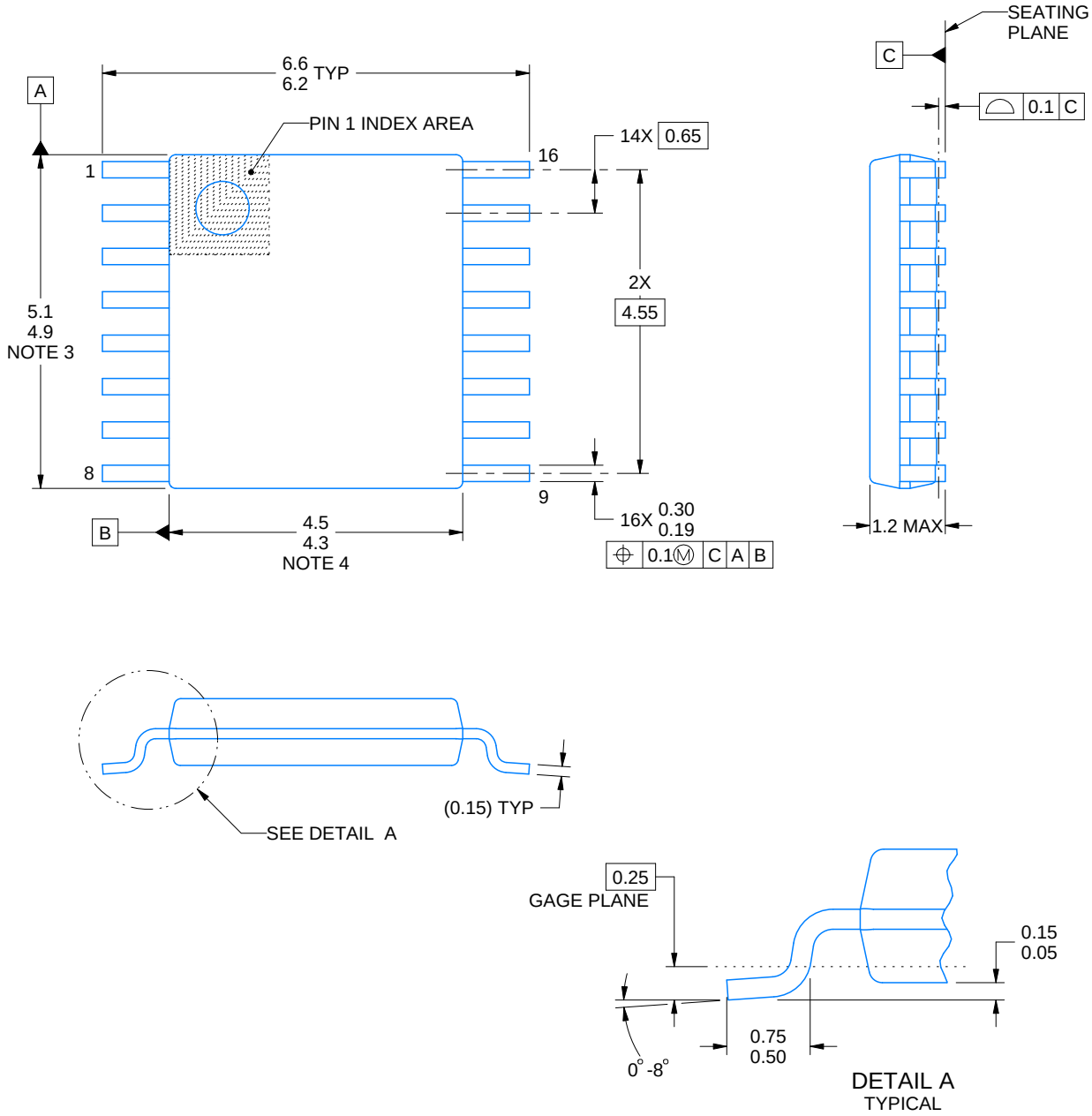


NOTES:

1. All linear dimensions are in millimeters. Any dimensions in parenthesis are for reference only. Dimensioning and tolerancing per ASME Y14.5M.
2. This drawing is subject to change without notice.
3. This dimension does not include mold flash, protrusions, or gate burrs. Mold flash, protrusions, or gate burrs shall not exceed 0.15 mm per side.
4. This dimension does not include interlead flash. Interlead flash shall not exceed 0.25 mm per side.
5. Reference JEDEC registration MO-153.

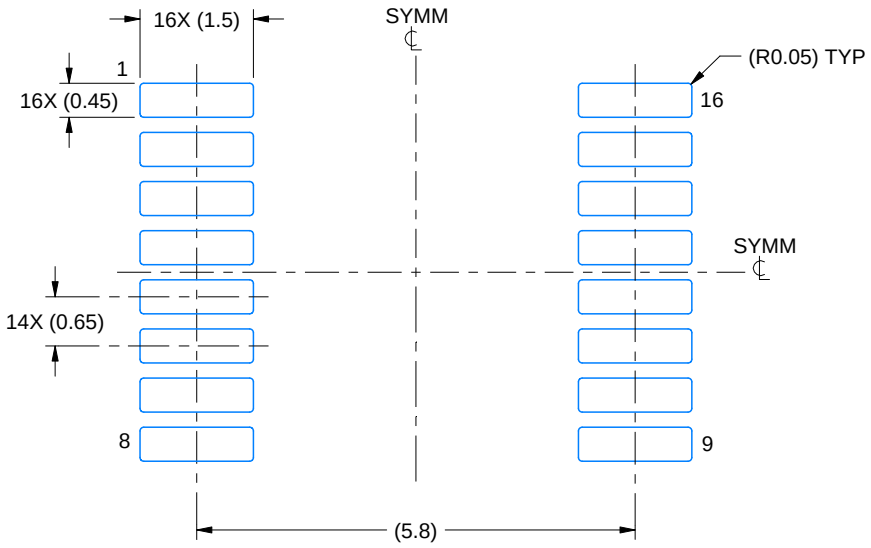


LAND PATTERN EXAMPLE
EXPOSED METAL SHOWN
SCALE: 10X

NON-SOLDER MASK DEFINED (PREFERRED)

SOLDER MASK DEFINED

SOLDER MASK DETAILS

4220204/A 02/2017

NOTES: (continued)

6. Publication IPC-7351 may have alternate designs.
7. Solder mask tolerances between and around signal pads can vary based on board fabrication site.

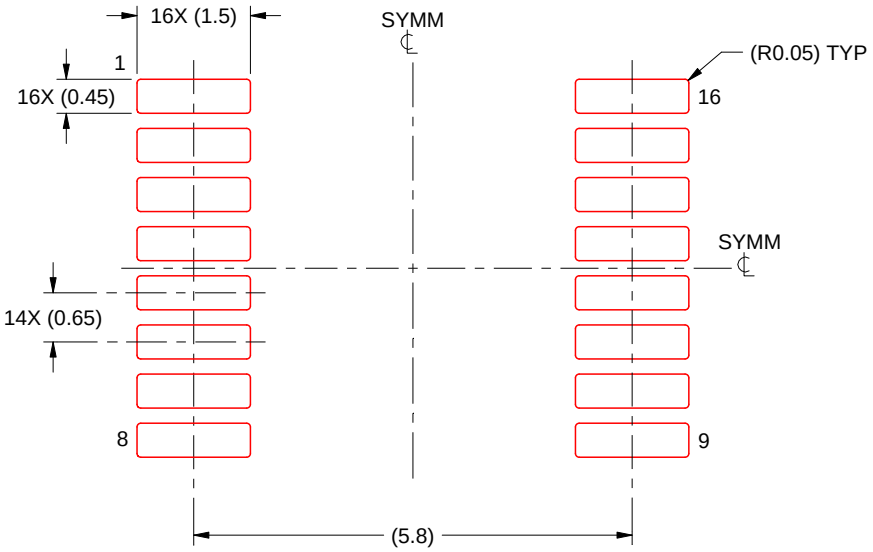


SOLDER PASTE EXAMPLE
BASED ON 0.125 mm THICK STENCIL
SCALE: 10X

4220204/A 02/2017

NOTES: (continued)

8. Laser cutting apertures with trapezoidal walls and rounded corners may offer better paste release. IPC-7525 may have alternate design recommendations.
9. Board assembly site may have different recommendations for stencil design.

# IMPORTANT NOTICE AND DISCLAIMER

TI PROVIDES TECHNICAL AND RELIABILITY DATA (INCLUDING DATA SHEETS), DESIGN RESOURCES (INCLUDING REFERENCE DESIGNS), APPLICATION OR OTHER DESIGN ADVICE, WEB TOOLS, SAFETY INFORMATION, AND OTHER RESOURCES “AS IS” AND WITH ALL FAULTS, AND DISCLAIMS ALL WARRANTIES, EXPRESS AND IMPLIED, INCLUDING WITHOUT LIMITATION ANY IMPLIED WARRANTIES OF MERCHANTABILITY, FITNESS FOR A PARTICULAR PURPOSE OR NON-INFRINGEMENT OF THIRD PARTY INTELLECTUAL PROPERTY RIGHTS.

These resources are intended for skilled developers designing with TI products. You are solely responsible for (1) selecting the appropriate TI products for your application, (2) designing, validating and testing your application, and (3) ensuring your application meets applicable standards, and any other safety, security, regulatory or other requirements.

These resources are subject to change without notice. TI grants you permission to use these resources only for development of an application that uses the TI products described in the resource. Other reproduction and display of these resources is prohibited. No license is granted to any other TI intellectual property right or to any third party intellectual property right. TI disclaims responsibility for, and you will fully indemnify TI and its representatives against, any claims, damages, costs, losses, and liabilities arising out of your use of these resources.

TI’s products are provided subject to TI’s Terms of Sale or other applicable terms available either on ti.com or provided in conjunction with such TI products. TI’s provision of these resources does not expand or otherwise alter TI’s applicable warranties or warranty disclaimers for TI products.

TI objects to and rejects any additional or different terms you may have proposed.

Mailing Address: Texas Instruments, Post Office Box 655303, Dallas, Texas 75265
Copyright © 2025, Texas Instruments Incorporated