TPS56320x 4.5V to 17V Input, 3A Synchronous Step-Down Voltage Regulator in SOT-23

1 Features

- TPS563201 and TPS563208 3A converter integrated 95mΩ and 57mΩ FETs
- D-CAP2™ control scheme with fast transient response
- Input voltage range: 4.5V to 17V
- Output voltage range: 0.76V to 7V
- Pulse-skip mode (TPS563201) or continuous current mode (TPS563208)
- 580kHz switching frequency
- Low shutdown current less than 20µA
- 2% feedback voltage accuracy (25°C)
- Startup from prebiased output voltage
- Cycle-by-cycle overcurrent limit
- Hiccup-mode overcurrent protection
- Non-latch UVP and TSD protections
- Fixed soft start: 1.0ms
- Create a custom design using the TPS56320x with the WEBENCH® Power Designer

2 Applications

- Digital TV power supply
- High definition Blu-ray™ disc players
- Networking home terminal
- Digital Set Top Box (STB)
- Surveillance

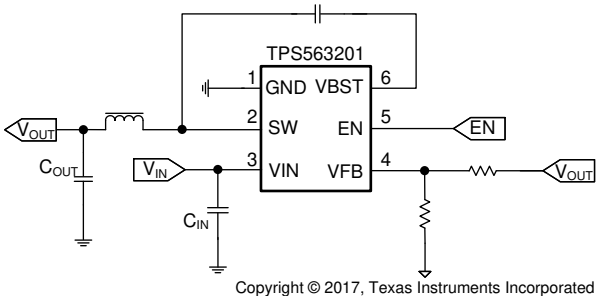

Simplified Schematic

3 Description

The TPS563201 and TPS563208 are simple, easy-to-use, 3A synchronous step-down converters in SOT-23 package.

The devices are designed to operate with minimum external component counts and also designed to achieve low standby current.

These switch mode power supply (SMPS) devices employ D-CAP2 control scheme providing a fast transient response and supporting both low equivalent series resistance (ESR) output capacitors such as specialty polymer and ultra-low ESR ceramic capacitors with no external compensation components.

The TPS563201 operates in pulse skip mode, which maintains high efficiency during light load operation. The TPS563201 and TPS563208 are available in a 6-pin 1.6mm × 2.9mm SOT (DDC) package, and specified from a –40°C to 125°C junction temperature.

Device Information

PART NUMBER	MODE	PACKAGE(1)	PACKAGE SIZE(2)
TPS563201	ECO	DDC (SOT, 6)	1.6mm × 2.9mm
TPS563208	FCCM		

(1) For more information, see Section 10.
(2) The package size (length × width) is a nominal value and includes pins, where applicable.

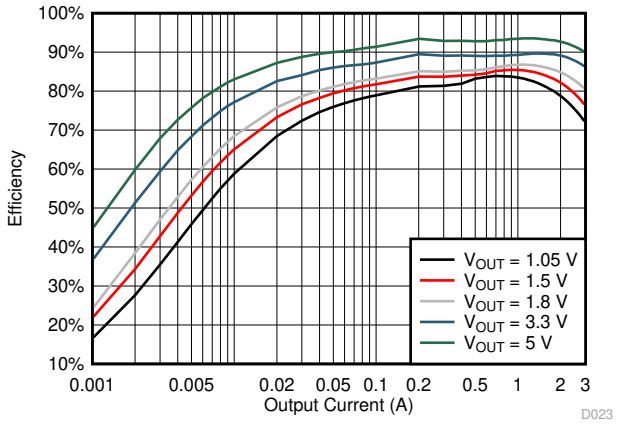

TPS563201 Efficiency

An IMPORTANT NOTICE at the end of this data sheet addresses availability, warranty, changes, use in safety-critical applications, intellectual property matters and other important disclaimers. PRODUCTION DATA.

Table of Contents

1 Features....1
2 Applications....1
3 Description....1
4 Pin Configuration and Functions....3
5 Specifications....4
5.1 Absolute Maximum Ratings....4
5.2 ESD Ratings....4
5.3 Recommended Operating Conditions....4
5.4 Thermal Information....5
5.5 Electrical Characteristics....6
5.6 Typical Characteristics....7
6 Detailed Description....10
6.1 Overview....10
6.2 Functional Block Diagram....10
6.3 Feature Description....10
6.4 Device Functional Modes....12
7 Application and Implementation....13
7.1 Application Information....13
7.2 Typical Application....13
7.3 Power Supply Recommendations....19
7.4 Layout....19
8 Device and Documentation Support....21
8.1 Device Support....21
8.2 Receiving Notification of Documentation Updates....21
8.3 Support Resources....21
8.4 Trademarks....21
8.5 Electrostatic Discharge Caution....21
8.6 Glossary....21
9 Revision History....22
10 Mechanical, Packaging, and Orderable Information....22
10.1 Tape and Reel Information....23

Copyright © 2024 Texas Instruments Incorporated

4 Pin Configuration and Functions

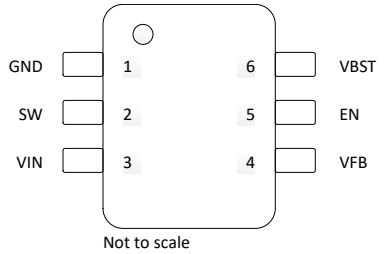

Figure 4-1. DDC Package 6-Pin SOT Top View

Table 4-1. Pin Functions

PIN		TYPE[(1)]	DESCRIPTION
NAME	NO.		
GND	1	—	Ground pin Source terminal of low-side power NFET as well as the ground terminal for controller circuit. Connect sensitive VFB to this GND at a single point.
SW	2	O	Switch node connection between high-side NFET and low-side NFET.
VIN	3	I	Input voltage supply pin. The drain terminal of high-side power NFET.
VFB	4	I	Converter feedback input. Connect to output voltage with feedback resistor divider.
EN	5	I	Enable input control. Active high and must be pulled up to enable the device.
VBST	6	O	Supply input for the high-side NFET gate drive circuit. Connect 0.1 µF capacitor between VBST and SW pins.

(1) I = input, O = output

Copyright © 2024 Texas Instruments Incorporated

5 Specifications

5.1 Absolute Maximum Ratings

over operating free-air temperature range (unless otherwise noted)[1]

		MIN	MAX	UNIT
Input voltage	VIN, EN	–0.3	19	V
	VBST	–0.3	25	V
	VBST (10 ns transient)	–0.3	27	V
	VBST (vs SW)	–0.3	6	V
	VFB	–0.3	6	V
	SW	–2	19	V
	SW (10 ns transient)	–3.5	21	V
Operating junction temperature, T_J		–40	150	°C
Storage temperature, T_{stg}		–55	150	°C

(1) Stresses beyond those listed under *Absolute Maximum Ratings* may cause permanent damage to the device. These are stress ratings only, which do not imply functional operation of the device at these or any other conditions beyond those indicated under *Recommended Operating Conditions*. Exposure to absolute-maximum-rated conditions for extended periods may affect device reliability.

5.2 ESD Ratings

			VALUE	UNIT
$V_{(ESD)}$	Electrostatic discharge	Human-body model (HBM), per ANSI/ESDA/JEDEC JS-001[1]	±2000	V
		Charged-device model (CDM), per JEDEC specification JESD22-C101[2]	±1500	

(1) JEDEC document JEP155 states that 500-V HBM allows safe manufacturing with a standard ESD control process.
(2) JEDEC document JEP157 states that 250-V CDM allows safe manufacturing with a standard ESD control process.

5.3 Recommended Operating Conditions

over operating free-air temperature range (unless otherwise noted)

			MIN	NOM	MAX	UNIT
V_{IN}	Supply input voltage range		4.5		17	V
V_I	Input voltage range	VBST	–0.1		23	V
		VBST (10 ns transient)	–0.1		26	
		VBST (vs SW)	–0.1		5.5	
		EN	–0.1		17	
		VFB	–0.1		5.5	
		SW	–1.8		17	
		SW (10 ns transient)	–3.5		20	
T_J	Operating junction temperature		–40		125	°C

Copyright © 2024 Texas Instruments Incorporated

5.4 Thermal Information

THERMAL METRIC[1]		TPS56320x DDC (SOT) 6 PINS	UNIT
$R_{\theta JA}$	Junction-to-ambient thermal resistance	92.6	°C/W
$R_{\theta JC(top)}$	Junction-to-case (top) thermal resistance	48.5	°C/W
$R_{\theta JB}$	Junction-to-board thermal resistance	15.5	°C/W
ψ_{JT}	Junction-to-top characterization parameter	2.5	°C/W
ψ_{JB}	Junction-to-board characterization parameter	15.5	°C/W

(1) For more information about traditional and new thermal metrics, see the *Semiconductor and IC Package Thermal Metrics* application note.

5.5 Electrical Characteristics

T_J = –40°C to 125°C, V_{IN} = 12 V (unless otherwise noted)

PARAMETER		TEST CONDITIONS		MIN	TYP	MAX	UNIT
SUPPLY CURRENT							
I_{VIN}	Operating – non-switching supply current	V_{IN} current, EN = 5 V, V_{FB} = 0.9 V	TPS563201		120	200	μA
			TPS563208		350	500	
I_{VINSDN}	Shutdown supply current	V_{IN} current, EN = 0 V			8	20	μA
LOGIC THRESHOLD							
V_{ENH}	EN high-level input voltage			1.6			V
V_{ENL}	EN low-level input voltage					0.8	V
R_{EN}	EN pin resistance to GND	V_{EN} = 1.5 V		600	1500	2400	kΩ
I_{EN}	EN pulldown current	V_{EN} = 1.5 V			1		μA
V_{FB} VOLTAGE AND DISCHARGE RESISTANCE							
V_{FBTH}	V_{FB} threshold voltage (1)	V_O = 1.05 V, I_O = 10 mA, Eco-mode operation			774		mV
	V_{FB} threshold voltage	V_O = 1.05 V, continuous mode operation		749	768	787	mV
I_{VFB}	V_{FB} input current	V_{FB} = 0.8 V			0	±0.1	μA
MOSFET							
$R_{DS(on)h}$	High-side switch resistance	T_A = 25°C, V_{BST} – SW = 5 V			95		mΩ
$R_{DS(on)l}$	Low-side switch resistance	T_A = 25°C			57		mΩ
CURRENT LIMIT							
I_{ocl}	Current limit	DC current, V_{OUT} = 1.05 V, L_1 = 1.5 μH		3.3	4.2	5.1	A
THERMAL SHUTDOWN							
T_{SDN}	Thermal shutdown threshold (1)	Shutdown temperature			172		°C
		Hysteresis			37		
ON-TIME TIMER CONTROL							
$t_{OFF(MIN)}$	Minimum off time	V_{FB} = 0.5 V			220	310	ns
SOFT START							
Tss	Soft-start time	Internal soft-start time			1.0		ms
FREQUENCY							
F_{sw}	Switching frequency	V_{IN} = 12 V, V_O = 3.3 V, I_O = 1 A			580		kHz
OUTPUT UNDERVOLTAGE AND OVERVOLTAGE PROTECTION							
V_{UVP}	Output UVP threshold	Hiccup detect (H > L)			65%		
T_{HICCUP_WAIT}	Hiccup on time				1.2		ms
T_{HICCUP_RE}	Hiccup time before restart				10		ms
UVLO							
UVLO	UVLO threshold	Wake up VIN voltage			3.8	4.3	V
		Shutdown VIN voltage		3.3	3.4		
		Hysteresis VIN voltage			0.4		

(1) Not production tested.

Copyright © 2024 Texas Instruments Incorporated

5.6 Typical Characteristics

V_{IN} = 12 V (unless otherwise noted)

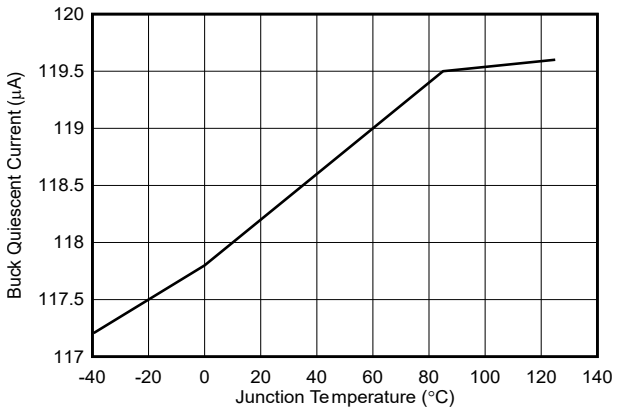

Figure 5-1. TPS563201 Supply Current vs Junction Temperature

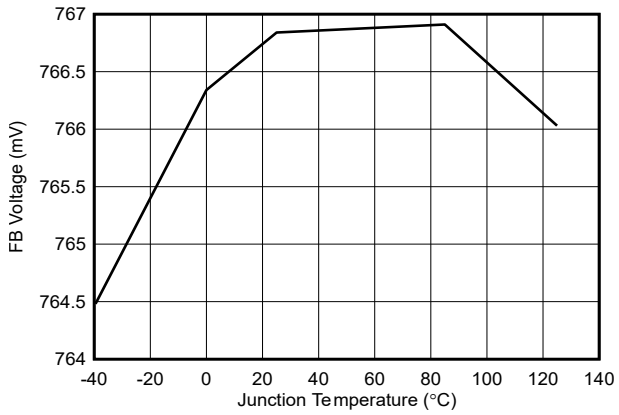

Figure 5-2. VFB Voltage vs Junction Temperature

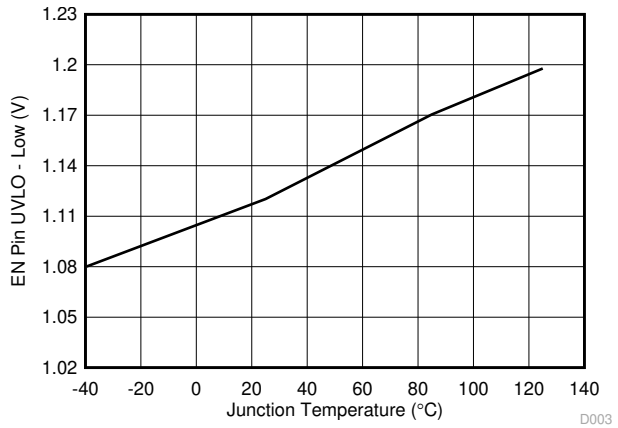

Figure 5-3. EN Pin UVLO Low Voltage vs Junction Temperature

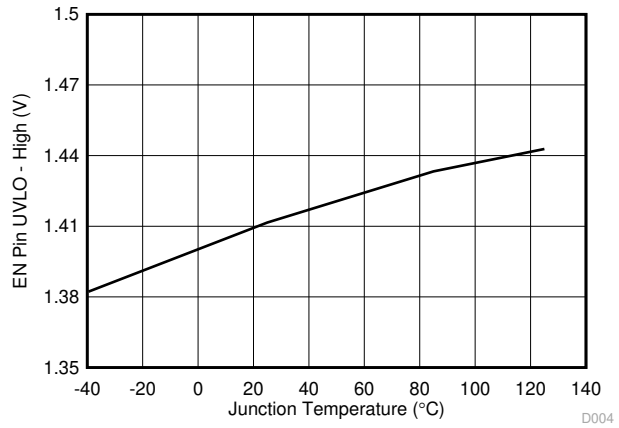

Figure 5-4. EN Pin UVLO High Voltage vs Junction Temperature

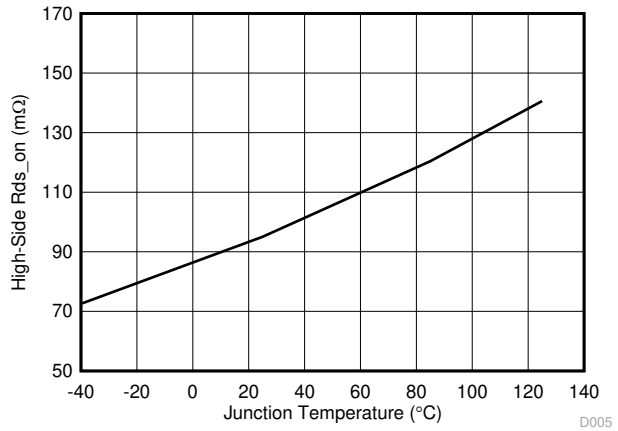

Figure 5-5. High-Side $R_{ds\text{-}On}$ vs Junction Temperature

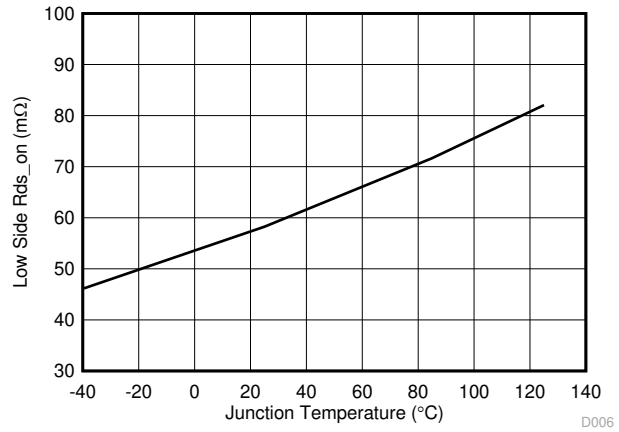

Figure 5-6. Low-Side $R_{ds\text{-}On}$ vs Junction Temperature

5.6 Typical Characteristics (continued)

V_{IN} = 12 V (unless otherwise noted)

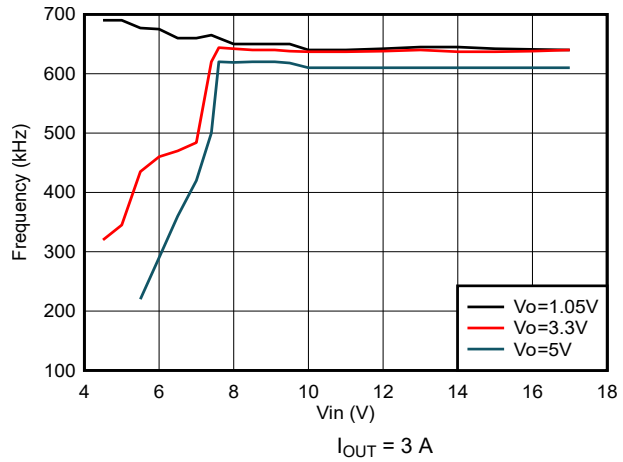

Figure 5-7. TPS563208 Switching Frequency vs Input Voltage

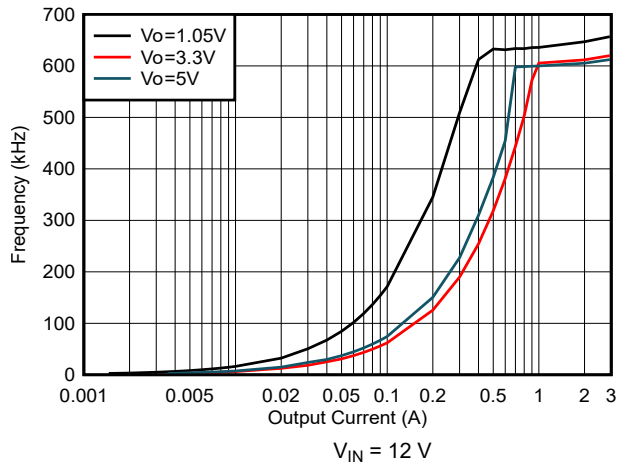

Figure 5-8. TPS563201 Switching Frequency vs Output Current

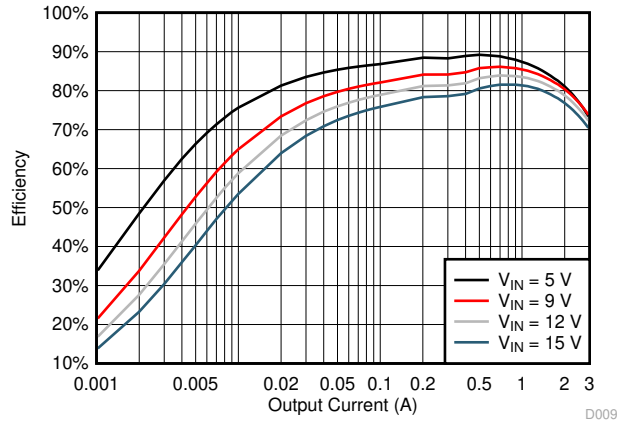

Figure 5-9. TPS563201 V_{OUT} = 1.05 V Efficiency, L = 2.2 µH

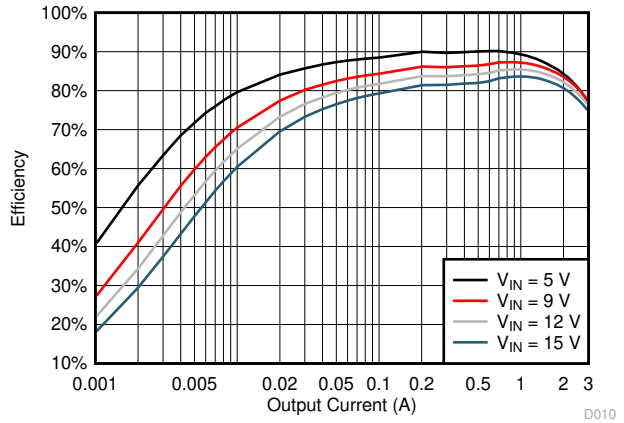

Figure 5-10. TPS563201 V_{OUT} = 1.5 V Efficiency, L = 2.2 µH

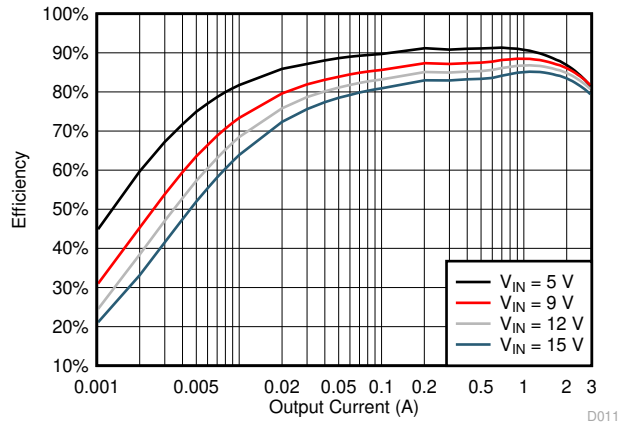

Figure 5-11. TPS563201 V_{OUT} = 1.8 V Efficiency, L = 2.2 µH

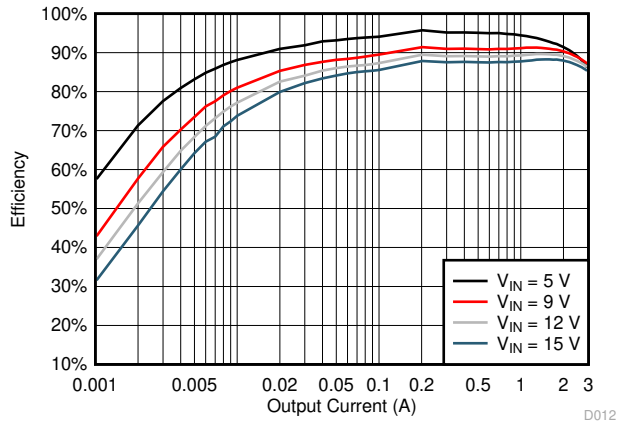

Figure 5-12. TPS563201 V_{OUT} = 3.3 V Efficiency, L = 2.2 µH

Copyright © 2024 Texas Instruments Incorporated

5.6 Typical Characteristics (continued)

V_{IN} = 12 V (unless otherwise noted)

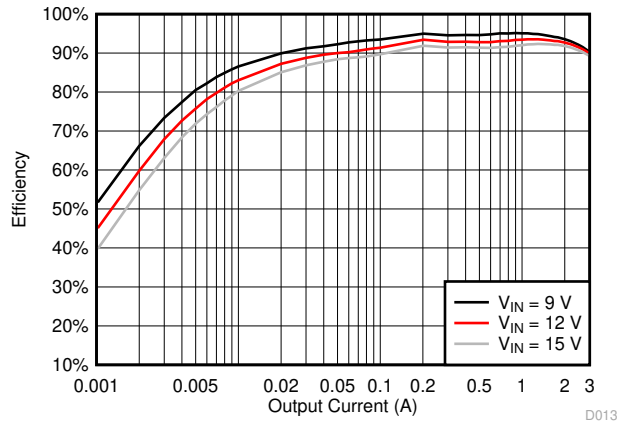

Figure 5-13. TPS563201 V_{OUT} = 5 V Efficiency, L = 3.3 µH

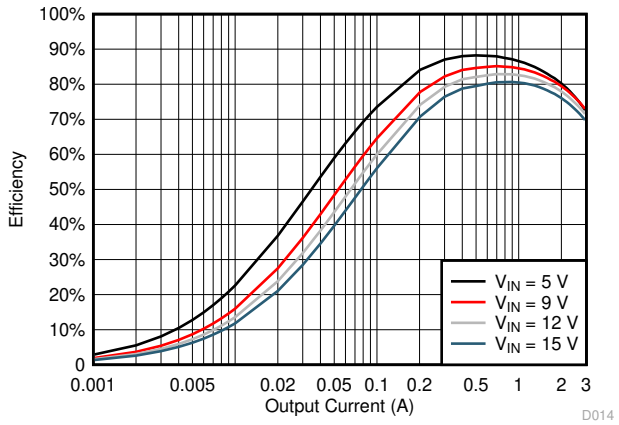

Figure 5-14. TPS563208 V_{OUT} = 1.05 V Efficiency, L = 2.2 µH

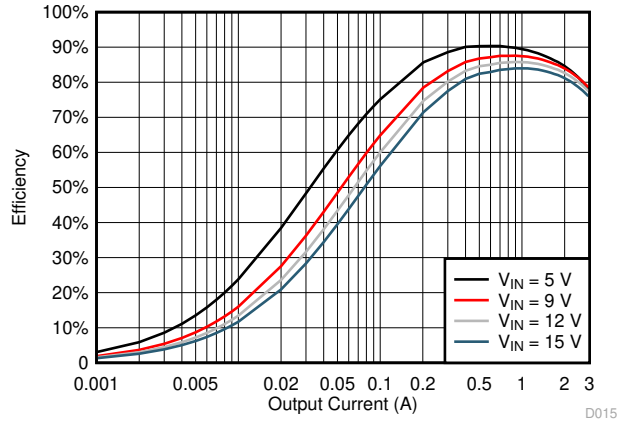

Figure 5-15. TPS563208 V_{OUT} = 1.5 V Efficiency, L = 2.2 µH

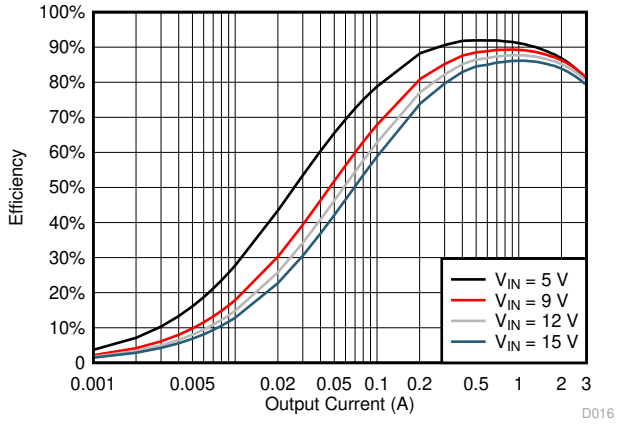

Figure 5-16. TPS563208 V_{OUT} = 1.8 V Efficiency, L = 2.2 µH

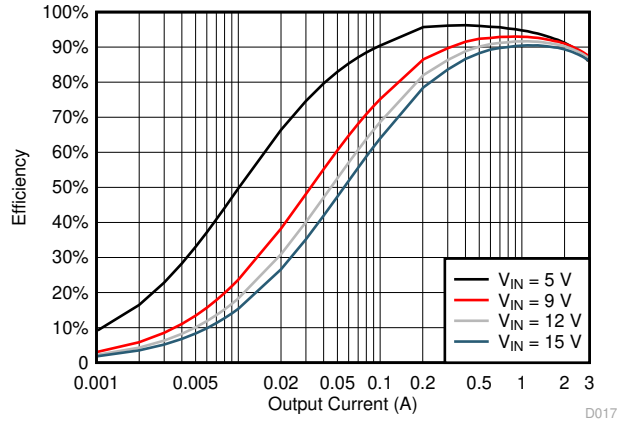

Figure 5-17. TPS563208 V_{OUT} = 3.3 V Efficiency, L = 2.2 µH

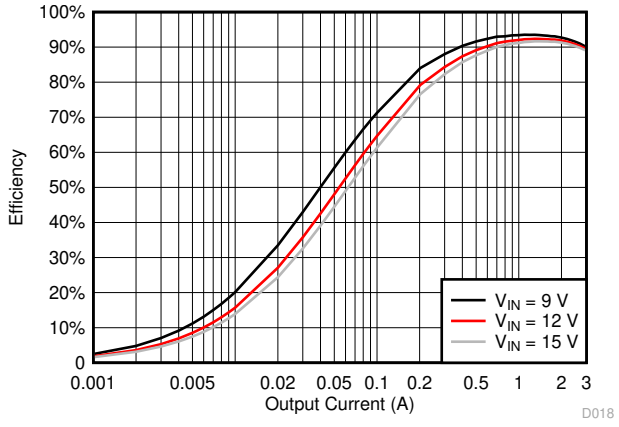

Figure 5-18. TPS563208 V_{OUT} = 5 V Efficiency, L = 3.3 µH

Copyright © 2024 Texas Instruments Incorporated

6 Detailed Description

6.1 Overview

The TPS563201 and TPS563208 are 3-A synchronous step-down converters. The proprietary D-CAP2 control scheme supports low ESR output capacitors such as specialty polymer capacitors and multi-layer ceramic capacitors without complex external compensation circuits. The fast transient response of D-CAP2 control scheme can reduce the output capacitance required to meet a specific level of performance.

6.2 Functional Block Diagram

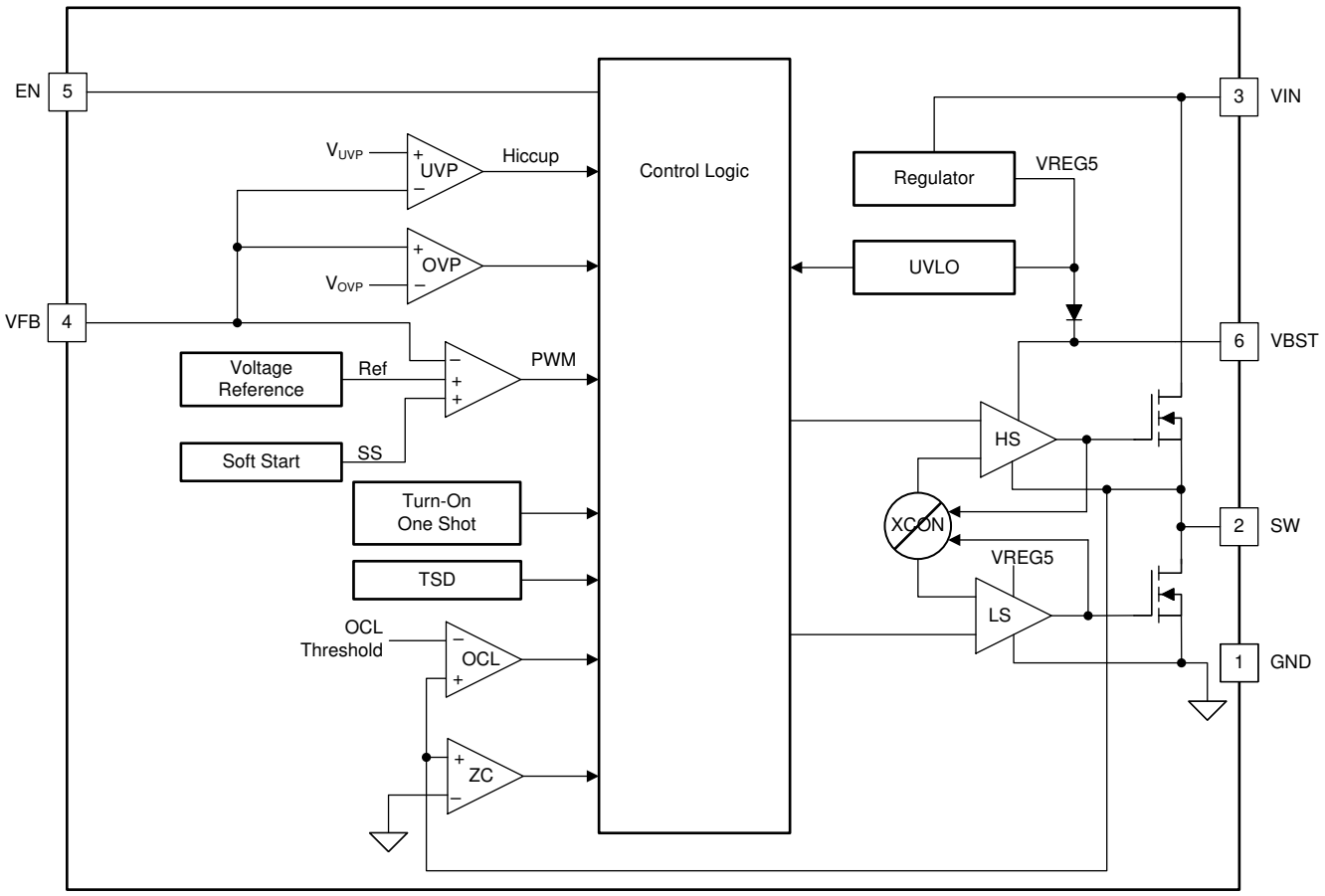

Copyright © 2017, Texas Instruments Incorporated

6.3 Feature Description

6.3.1 Adaptive On-Time Control and PWM Operation

The main control loop of the TPS563201 and TPS563208 is adaptive on-time pulse width modulation (PWM) controller that supports a proprietary D-CAP2 control scheme. The D-CAP2 control scheme combines adaptive on-time control with an internal compensation circuit for pseudo-fixed frequency and low external component count configuration with both low-ESR and ceramic output capacitors. It is stable even with virtually no ripple at the output.

At the beginning of each cycle, the high-side MOSFET is turned on. This MOSFET is turned off after internal one shot timer expires. This one shot duration is set proportional to the converter input voltage, VIN, and inversely proportional to the output voltage, V_O, to maintain a pseudo-fixed frequency over the input voltage range, hence it is called adaptive on-time control. The one-shot timer is reset and the high-side MOSFET is turned on again when the feedback voltage falls below the reference voltage. An internal ramp is added to reference voltage to simulate output ripple, eliminating the need for ESR induced output ripple from D-CAP2 control scheme.

Copyright © 2024 Texas Instruments Incorporated

6.3.2 Pulse Skip Control (TPS563201)

The TPS563201 is designed with advanced Eco-mode to maintain high light load efficiency. As the output current decreases from heavy load condition, the inductor current is also reduced and eventually comes to point that its rippled valley touches zero level, which is the boundary between continuous conduction and discontinuous conduction modes. The rectifying MOSFET is turned off when the zero inductor current is detected. As the load current further decreases the converter runs into discontinuous conduction mode. The on-time is kept almost the same as it was in the continuous conduction mode so that it takes longer time to discharge the output capacitor with smaller load current to the level of the reference voltage. This makes the switching frequency lower, proportional to the load current, and keeps the light load efficiency high. The transition point to the light load operation $I_{OUT(LL)}$ current can be calculated in Equation 1.

$$I_{OUT(LL)} = \frac{1}{2 \times L \times f_{SW}} \times \frac{(V_{IN} - V_{OUT}) \times V_{OUT}}{V_{IN}} \quad (1)$$

6.3.3 Soft Start and Pre-Biased Soft Start

The TPS563201 and TPS563208 have an internal 1-ms soft-start. When the EN pin becomes high, the internal soft-start function begins ramping up the reference voltage to the PWM comparator.

If the output capacitor is pre-biased at startup, the devices initiate switching and start ramping up only after the internal reference voltage becomes greater than the feedback voltage V_{FB}. This scheme ensures that the converters ramp up smoothly into regulation point.

6.3.4 Current Protection

The output over-current limit (OCL) is implemented using a cycle-by-cycle valley detect control circuit. The switch current is monitored during the OFF state by measuring the low-side FET drain to source voltage. This voltage is proportional to the switch current. To improve accuracy, the voltage sensing is temperature compensated.

During the on time of the high-side FET switch, the switch current increases at a linear rate determined by Vin, Vout, the on-time and the output inductor value. During the on time of the low-side FET switch, this current decreases linearly. The average value of the switch current is the load current I_{out}. If the monitored current is above the OCL level, the converter maintains low-side FET on and delays the creation of a new set pulse, even the voltage feedback loop requires one, until the current level becomes OCL level or lower. In subsequent switching cycles, the on-time is set to a fixed value and the current is monitored in the same manner.

There are some important considerations for this type of over-current protection. The load current is higher than the over-current threshold by one half of the peak-to-peak inductor ripple current. Also, when the current is being limited, the output voltage tends to fall as the demanded load current may be higher than the current available from the converter. This may cause the output voltage to fall. When the VFB voltage falls below the UVP threshold voltage, the UVP comparator detects it. And then, the device will shut down after the UVP delay time (typically 256 µs) and re-start after the hiccup time (typically 10 ms).

When the over current condition is removed, the output voltage returns to the regulated value.

6.3.5 Undervoltage Lockout (UVLO) Protection

UVLO protection monitors the internal regulator voltage. When the voltage is lower than UVLO threshold voltage, the device is shut off. This protection is non-latching.

6.3.6 Thermal Shutdown

The device monitors the temperature of itself. If the temperature exceeds the threshold value (typically 172°C), the device is shut off. This is a non-latch protection.

Copyright © 2024 Texas Instruments Incorporated

6.4 Device Functional Modes

6.4.1 Normal Operation

When the input voltage is above the UVLO threshold and the EN voltage is above the enable threshold, the TPS563201 and TPS563208 can operate in the normal switching modes. The TPS563201 and TPS563208 operate at a quasi-fixed frequency of about 580kHz under CCM mode when T_{ON} extension is not triggered. When input voltage V_{IN} < 7V and V_{FB} is lower than internal reference voltage, the switching frequency is allowed to smoothly drop to make T_{ON} extended to keep output voltage and improve the load transient performance. The minimum switching frequency is limited to about 200kHz.

6.4.2 Eco-mode Operation

When the TPS563201 and TPS563208 are in the normal CCM operating mode and the switch current falls to 0 A, the TPS563201 begins operating in pulse skipping Eco-mode. Each switching cycle is followed by a period of energy saving sleep time. The sleep time ends when the VFB voltage falls below the Eco-mode threshold voltage. As the output current decreases, the perceived time between switching pulses increases.

6.4.3 Standby Operation

When the TPS563201 and TPS563208 are operating in either normal CCM or Eco-mode, they may be placed in standby by asserting the EN pin low.

Copyright © 2024 Texas Instruments Incorporated

7 Application and Implementation

Note

Information in the following applications sections is not part of the TI component specification, and TI does not warrant its accuracy or completeness. TI's customers are responsible for determining suitability of components for their purposes, as well as validating and testing their design implementation to confirm system functionality.

7.1 Application Information

The devices are typical step-down DC-DC converters. The devices are typically used to convert a higher dc voltage to a lower dc voltage with a maximum available output current of 3 A. The following design procedure can be used to select component values for the TPS563201 and TPS563208. Alternately, the WEBENCH software can be used to generate a complete design. The WEBENCH software uses an iterative design procedure and accesses a comprehensive database of components when generating a design. This section presents a simplified discussion of the design process.

7.2 Typical Application

The application schematic in Figure 7-1 was developed to meet the previous requirements. This circuit is available as the evaluation module (EVM). The sections provide the design procedure.

Figure 7-1 shows the TPS563201 and TPS563208 4.5-V to 17-V input, 1.05-V output converter schematics.

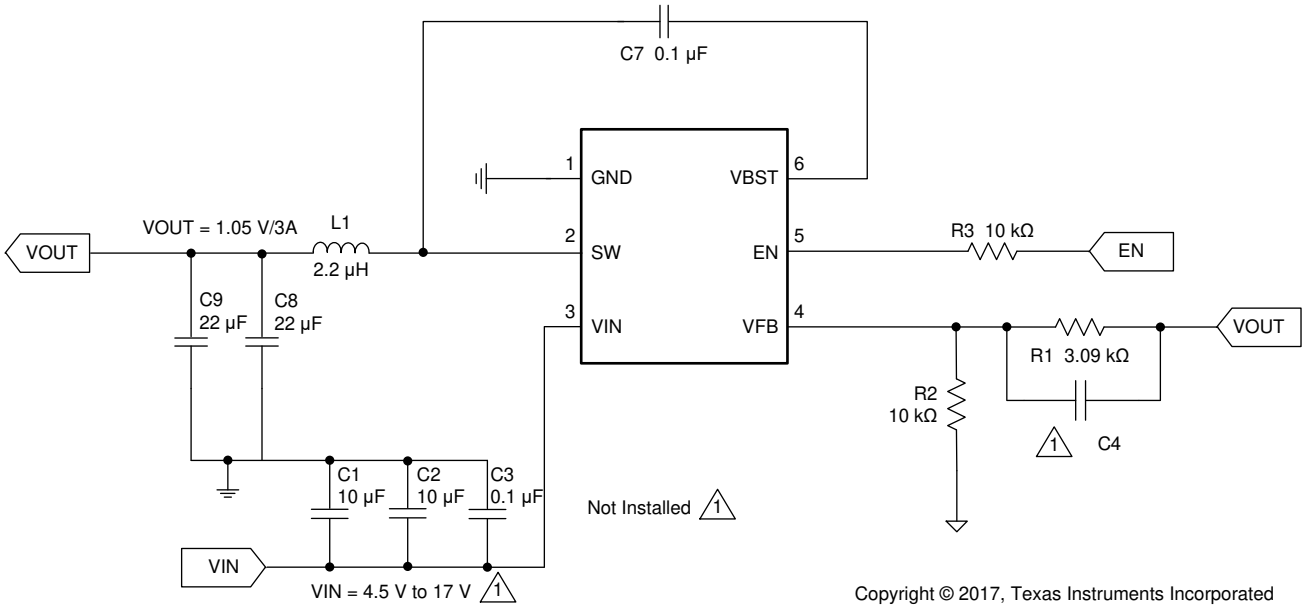

Figure 7-1. TPS563201 and TPS563208 1.05-V/3-A Reference Design

7.2.1 Design Requirements

Table 7-1 shows the design parameters for this application.

Table 7-1. Design Parameters

PARAMETER	EXAMPLE VALUE
Input voltage range	4.5 to 17 V
Output voltage	1.05 V
Transient response, 1.5-A load step	ΔVout = ±5%
Input ripple voltage	400 mV
Output ripple voltage	30 mV
Output current rating	3 A
Operating frequency	580 kHz

7.2.2 Detailed Design Procedure

7.2.2.1 Custom Design with WEBENCH® Tools

Click here to create a custom design using the TPS56320x device with the WEBENCH® Power Designer.

1. Start by entering the input voltage (V_{IN}), output voltage (V_{OUT}), and output current (I_{OUT}) requirements.
2. Optimize the design for key parameters such as efficiency, footprint, and cost using the optimizer dial.
3. Compare the generated design with other possible solutions from Texas Instruments.

The WEBENCH Power Designer provides a customized schematic along with a list of materials with real-time pricing and component availability.

In most cases, these actions are available:

- Run electrical simulations to see important waveforms and circuit performance
- Run thermal simulations to understand board thermal performance
- Export customized schematic and layout into popular CAD formats
- Print PDF reports for the design, and share the design with colleagues

Get more information about WEBENCH tools at www.ti.com/WEBENCH.

7.2.2.2 Output Voltage Resistors Selection

The output voltage is set with a resistor divider from the output node to the VFB pin. TI recommends to use 1% tolerance or better divider resistors. Start by using Equation 2 to calculate V_{OUT}.

To improve efficiency at very light loads consider using larger value resistors, too high of resistance will be more susceptible to noise and voltage errors from the VFB input current will be more noticeable.

$$V_{OUT} = 0.768 \times \left(1 + \frac{R1}{R2}\right) \tag{2}$$

7.2.2.3 Output Filter Selection

The LC filter used as the output filter has double pole at:

$$f_P = \frac{1}{2\pi\sqrt{L_{OUT} \times C_{OUT}}} \tag{3}$$

At low frequencies, the overall loop gain is set by the output set-point resistor divider network and the internal gain of the device. The low frequency phase is 180°. At the output filter pole frequency, the gain rolls off at a –40 dB per decade rate and the phase drops rapidly. D-CAP2 control scheme introduces a high frequency zero that reduces the gain roll off to –20 dB per decade and increases the phase to 90° one decade above the zero frequency. The inductor and capacitor for the output filter must be selected so that the double pole of Equation 3

Copyright © 2024 Texas Instruments Incorporated

is located below the high frequency zero but close enough that the phase boost provided be the high frequency zero provides adequate phase margin for a stable circuit. To meet this requirement use the values recommended in Table 7-2.

Table 7-2. Recommended Component Values

OUTPUT VOLTAGE (V)	R1 (kΩ)	R2 (kΩ)	L1 (µH)			C8 + C9 (µF)
			MIN	TYP	MAX	
1	3.09	10.0	1.5	2.2	4.7	20 to 68
1.05	3.74	10.0	1.5	2.2	4.7	20 to 68
1.2	5.76	10.0	1.5	2.2	4.7	20 to 68
1.5	9.53	10.0	1.5	2.2	4.7	20 to 68
1.8	13.7	10.0	1.5	2.2	4.7	20 to 68
2.5	22.6	10.0	2.2	2.2	4.7	20 to 68
3.3	33.2	10.0	2.2	2.2	4.7	20 to 68
5	54.9	10.0	3.3	3.3	4.7	20 to 68
6.5	75	10.0	3.3	3.3	4.7	20 to 68

The inductor peak-to-peak ripple current, peak current and RMS current are calculated using Equation 4, Equation 5, and Equation 6. The inductor saturation current rating must be greater than the calculated peak current and the RMS or heating current rating must be greater than the calculated RMS current.

$$I_{P-P} = \frac{V_{OUT}}{V_{IN(MAX)}} \times \frac{V_{IN(MAX)} - V_{OUT}}{L_O \times f_{SW}} \tag{4}$$

$$I_{PEAK} = I_O + \frac{I_{P-P}}{2} \tag{5}$$

$$I_{LO(RMS)} = \sqrt{I_O^2 + \frac{1}{12} I_{P-P}^2} \tag{6}$$

For this design example, the calculated peak current is 3.5 A and the calculated RMS current is 3.01 A. The inductor used is a WE 74431122 with a peak current rating of 13 A and an RMS current rating of 9 A.

The capacitor value and ESR determines the amount of output voltage ripple. The TPS563201 and TPS563208 are intended for use with ceramic or other low ESR capacitors. Recommended values range from 20 µF to 68 µF. Use Equation 7 to determine the required RMS current rating for the output capacitor.

$$I_{CO(RMS)} = \frac{V_{OUT} \times (V_{IN} - V_{OUT})}{\sqrt{12} \times V_{IN} \times L_O \times f_{SW}} \tag{7}$$

For this design two TDK C3216X5R0J226M 22-µF output capacitors are used. The typical ESR is 2 mΩ each. The calculated RMS current is 0.286 A and each output capacitor is rated for 4 A.

7.2.2.4 Input Capacitor Selection

The TPS563201 and TPS563208 require an input decoupling capacitor and a bulk capacitor is needed depending on the application. TI recommends a ceramic capacitor over 10 µF for the decoupling capacitor. An additional 0.1-µF capacitor (C3) from pin 3 to ground is optional to provide additional high frequency filtering. The capacitor voltage rating needs to be greater than the maximum input voltage.

7.2.2.5 Bootstrap Capacitor Selection

A 0.1-µF ceramic capacitor must be connected between the VBST to SW pin for proper operation. TI recommends to use a ceramic capacitor.

Copyright © 2024 Texas Instruments Incorporated

7.2.3 Application Curves

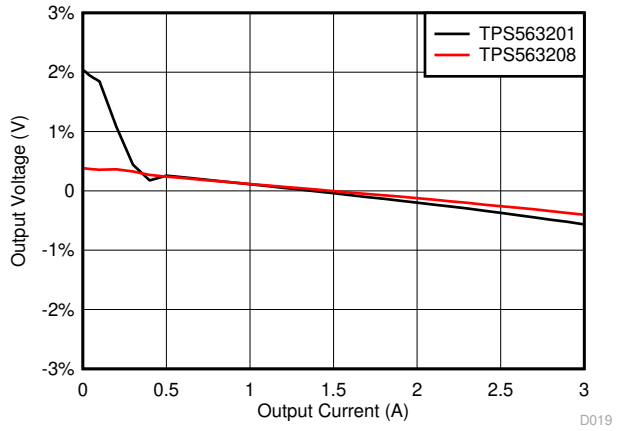

Figure 7-2. TPS563201 and TPS563208 Load Regulation, V_{IN} = 5 V

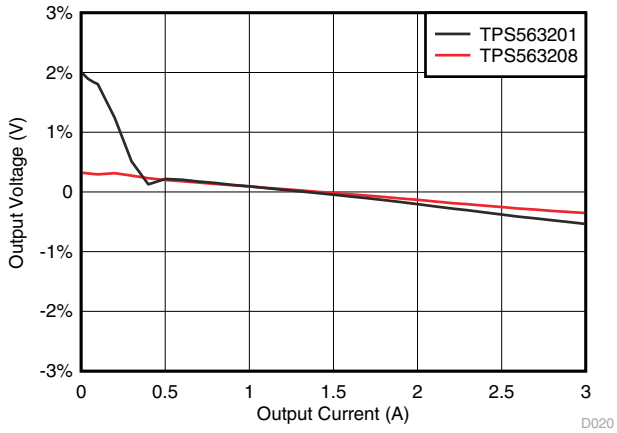

Figure 7-3. TPS563201 and TPS563208 Load Regulation, V_{IN} = 12 V

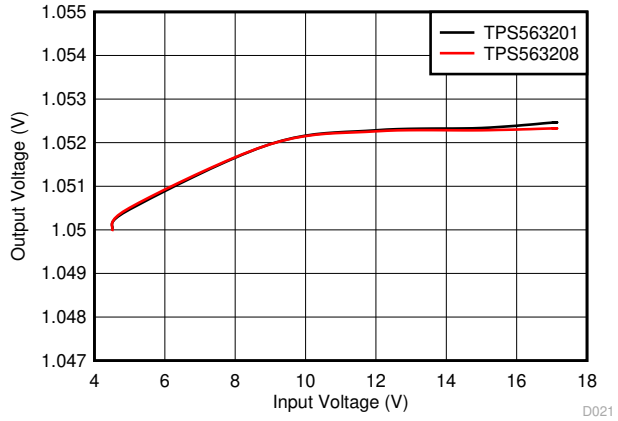

I_{OUT} of TPS563201: 1 A
I_{OUT} of TPS563208: 10 mA

Figure 7-4. TPS563201 and TPS563208 Line Regulation

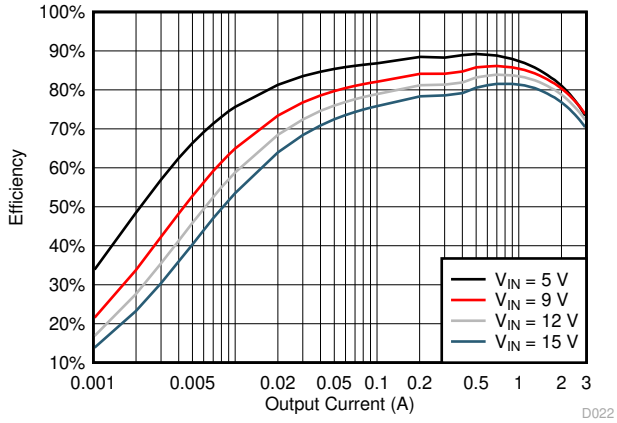

Figure 7-5. TPS563201 Efficiency

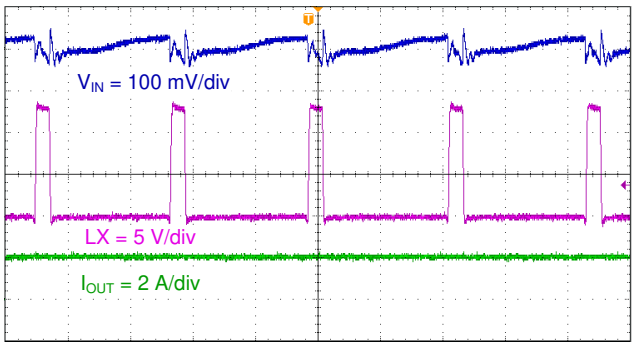

800 ns/div

Figure 7-6. TPS563201 Input Voltage Ripple

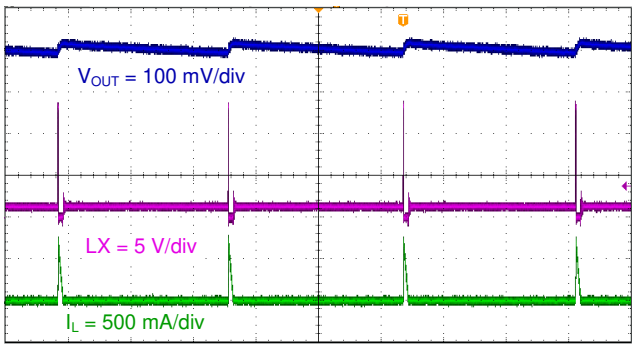

20 µs/div

Figure 7-7. TPS563201 Output Voltage Ripple, 10 mA

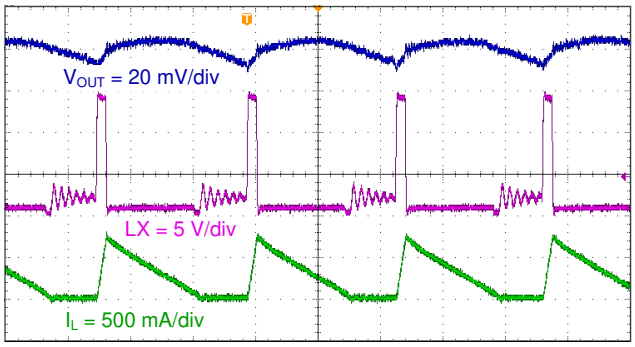

1 µs/div

Figure 7-8. TPS563201 Output Voltage Ripple, I_{out} = 0.25 A

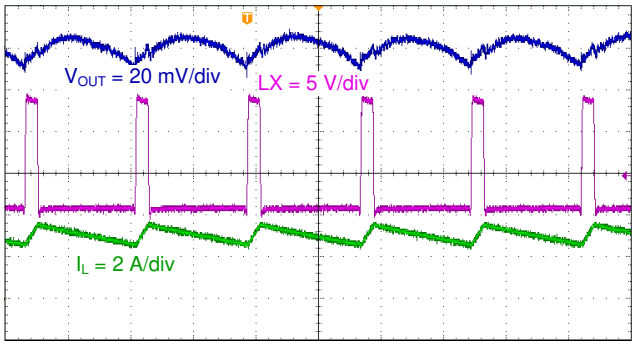

1 µs/div

Figure 7-9. TPS563201 Output Voltage Ripple, I_{out} = 2 A

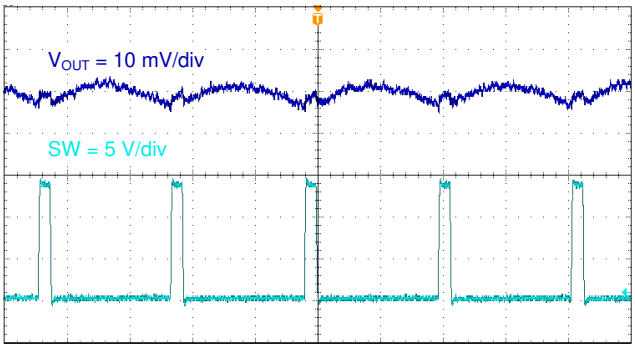

800 ns/div

Figure 7-10. TPS563208 Output Voltage Ripple, I_{OUT} = 0 A

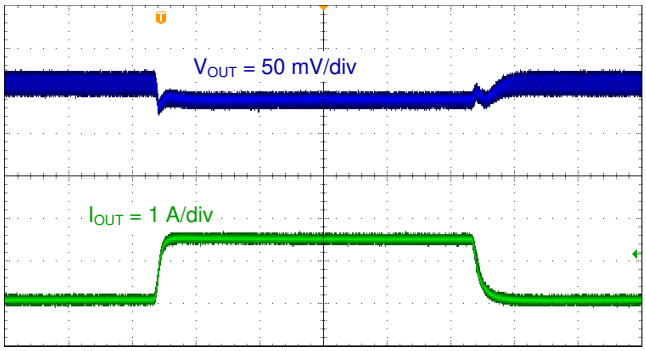

100 µs/div

Figure 7-11. TPS563201 Transient Response, 0.1 to 1.5 A

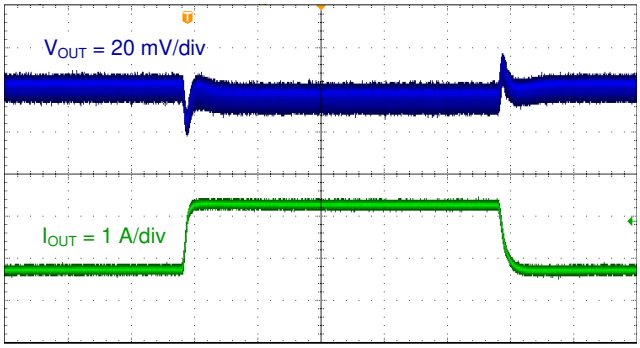

100 µs/div

Figure 7-12. TPS563201 Transient Response, 0.75 to 2.25 A

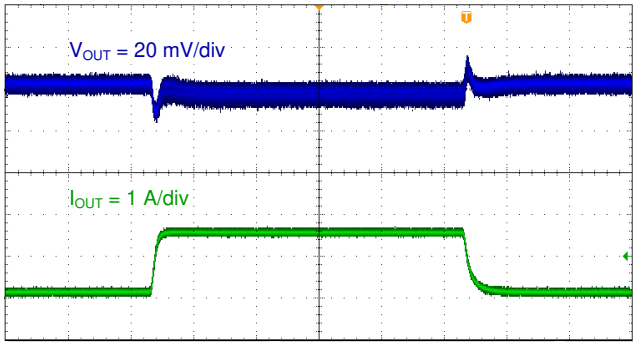

100 µs/div

Figure 7-13. TPS563208 Transient Response 0.1 to 2 A

Copyright © 2024 Texas Instruments Incorporated

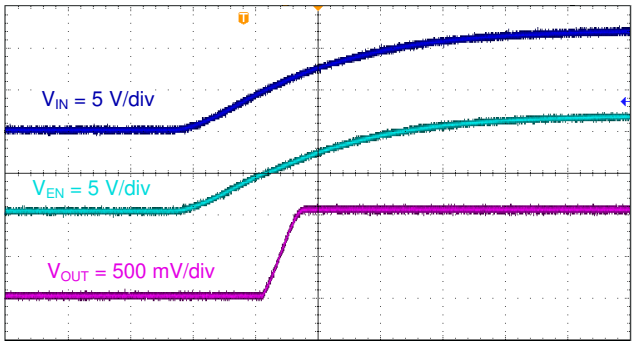

Figure 7-14. TPS563201 Start Up Relative to V_I

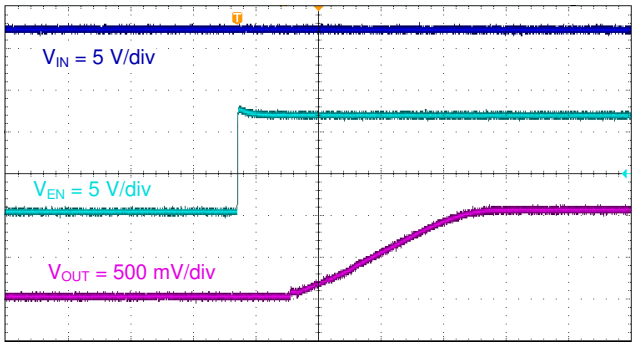

Figure 7-15. TPS563201 Start-Up Relative to EN

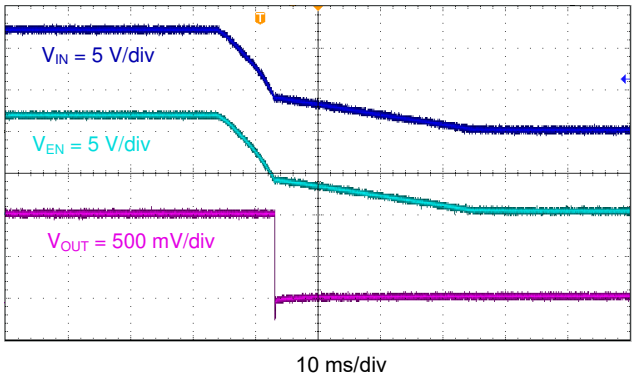

Figure 7-16. TPS563201 Shutdown Relative to V_I

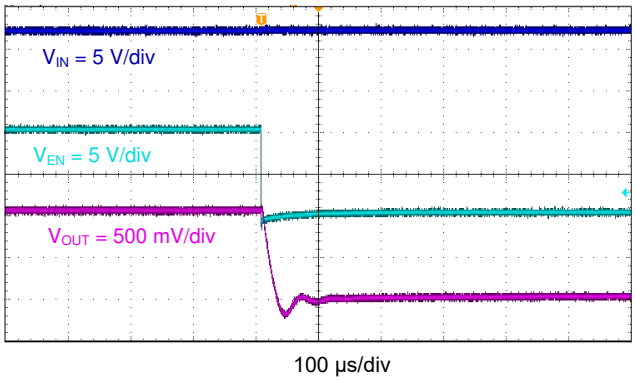

Figure 7-17. TPS563201 Shutdown Relative to EN

7.3 Power Supply Recommendations

TPS563201 and TPS563208 are designed to operate from input supply voltage in the range of 4.5 V to 17 V. Buck converters require the input voltage to be higher than the output voltage for proper operation. The maximum recommended operating duty cycle is 75%. Using that criteria, the minimum recommended input voltage is V_O / 0.75.

7.4 Layout

7.4.1 Layout Guidelines

1. VIN and GND traces must be as wide as possible to reduce trace impedance. The wide areas are also of advantage from the view point of heat dissipation.
2. The input capacitor and output capacitor must be placed as close to the device as possible to minimize trace impedance.
3. Provide sufficient vias for the input capacitor and output capacitor.
4. Keep the SW trace as physically short and wide as practical to minimize radiated emissions.
5. Do not allow switching current to flow under the device.
6. A separate VOUT path must be connected to the upper feedback resistor.
7. Make a Kelvin connection to the GND pin for the feedback path.
8. Voltage feedback loop must be placed away from the high-voltage switching trace, and preferably has ground shield.
9. The trace of the VFB node must be as small as possible to avoid noise coupling.
10. The GND trace between the output capacitor and the GND pin must be as wide as possible to minimize its trace impedance.

Copyright © 2024 Texas Instruments Incorporated

7.4.2 Layout Example

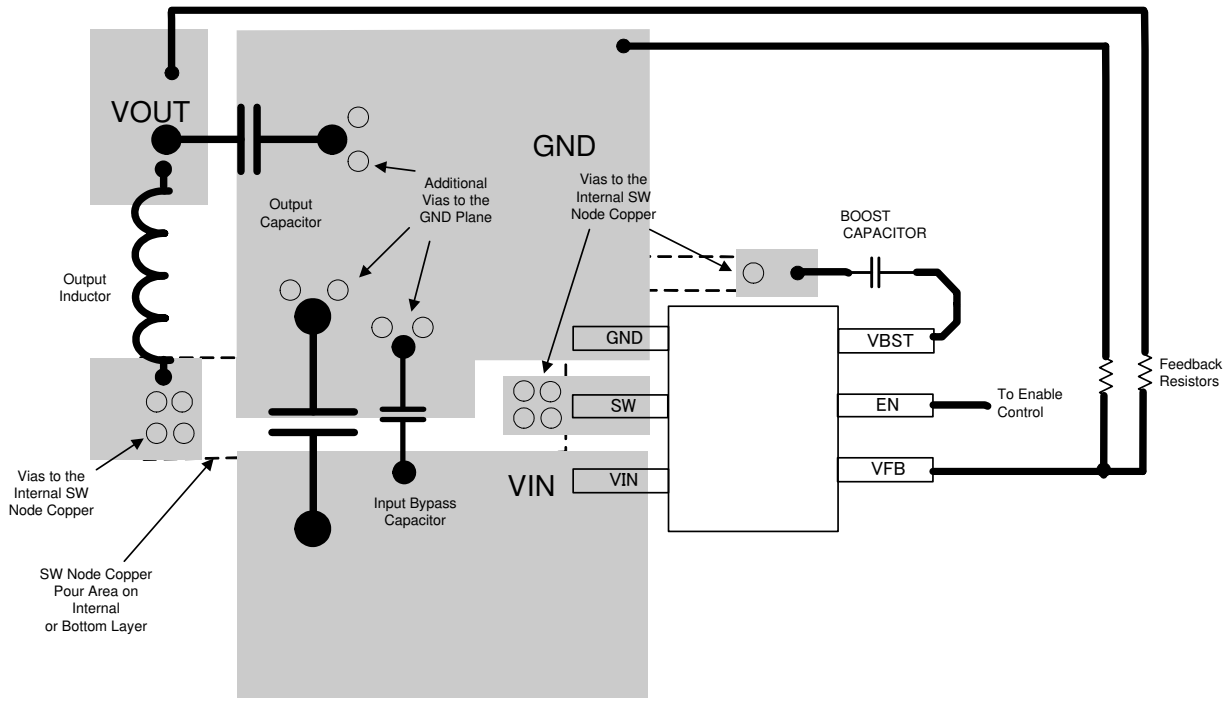

Figure 7-18. TPS563201 and TPS563208 Layout

Copyright © 2024 Texas Instruments Incorporated

8 Device and Documentation Support

8.1 Device Support

8.1.1 Development Support

8.1.1.1 Custom Design with WEBENCH® Tools

Click here to create a custom design using the TPS56320x device with the WEBENCH® Power Designer.

1. Start by entering the input voltage (V_{IN}), output voltage (V_{OUT}), and output current (I_{OUT}) requirements.
2. Optimize the design for key parameters such as efficiency, footprint, and cost using the optimizer dial.
3. Compare the generated design with other possible solutions from Texas Instruments.

The WEBENCH Power Designer provides a customized schematic along with a list of materials with real-time pricing and component availability.

In most cases, these actions are available:

- Run electrical simulations to see important waveforms and circuit performance
- Run thermal simulations to understand board thermal performance
- Export customized schematic and layout into popular CAD formats
- Print PDF reports for the design, and share the design with colleagues

Get more information about WEBENCH tools at www.ti.com/WEBENCH.

8.2 Receiving Notification of Documentation Updates

To receive notification of documentation updates, navigate to the device product folder on ti.com. Click on *Notifications* to register and receive a weekly digest of any product information that has changed. For change details, review the revision history included in any revised document.

8.3 Support Resources

TI E2E™ support forums are an engineer's go-to source for fast, verified answers and design help — straight from the experts. Search existing answers or ask your own question to get the quick design help you need.

Linked content is provided "AS IS" by the respective contributors. They do not constitute TI specifications and do not necessarily reflect TI's views; see TI's Terms of Use.

8.4 Trademarks

D-CAP2™ and TI E2E™ are trademarks of Texas Instruments.
Blu-ray™ is a trademark of Blu-ray Disc Association.
WEBENCH® is a registered trademark of Texas Instruments.
All trademarks are the property of their respective owners.

8.5 Electrostatic Discharge Caution

This integrated circuit can be damaged by ESD. Texas Instruments recommends that all integrated circuits be handled with appropriate precautions. Failure to observe proper handling and installation procedures can cause damage.

ESD damage can range from subtle performance degradation to complete device failure. Precision integrated circuits may be more susceptible to damage because very small parametric changes could cause the device not to meet its published specifications.

8.6 Glossary

TI Glossary	This glossary lists and explains terms, acronyms, and definitions.

9 Revision History

Changes from Revision A (April 2024) to Revision B (September 2024)	Page
• Updated specifications in the *Electrical Characteristics* table	6
• Updated Figure 5-7 and Figure 5-8	7
• Updated the *Normal Operation* description	12

Changes from Revision * (December 2015) to Revision A (April 2024)	Page
• Updated the numbering format for tables, figures, and cross-references throughout the document	1
• Changed low shutdown current from less than 10µA to 20µA	1
• Added WEBENCH information throughout the document	1
• Updated trademark information	1
• Updated *Device Information* table format	1
• Changed VBST (vs SW) and VFB MAX from 6.5 to 6	4
• Changed Human-body model (HBM) value from 3000 to 2000	4
• Changed VBST (vs SW) MAX from 6.0 to 5.5	4
• Updated specifications in the *Electrical Characteristics* table	6
• Updated Figure 5-1 and Figure 5-2	7
• Updated the *Current Protection* section	11

10 Mechanical, Packaging, and Orderable Information

The following pages include mechanical, packaging, and orderable information. This information is the most current data available for the designated devices. This data is subject to change without notice and revision of this document. For browser-based versions of this data sheet, refer to the left-hand navigation.

Copyright © 2024 Texas Instruments Incorporated

10.1 Tape and Reel Information

REEL DIMENSIONS

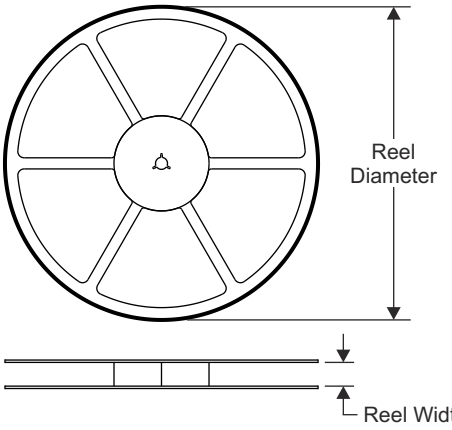

TAPE DIMENSIONS

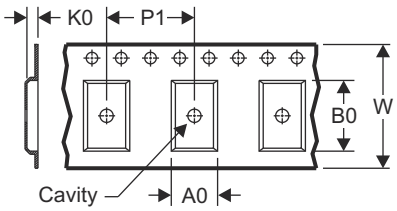

A0	Dimension designed to accommodate the component width
B0	Dimension designed to accommodate the component length
K0	Dimension designed to accommodate the component thickness
W	Overall width of the carrier tape
P1	Pitch between successive cavity centers

QUADRANT ASSIGNMENTS FOR PIN 1 ORIENTATION IN TAPE

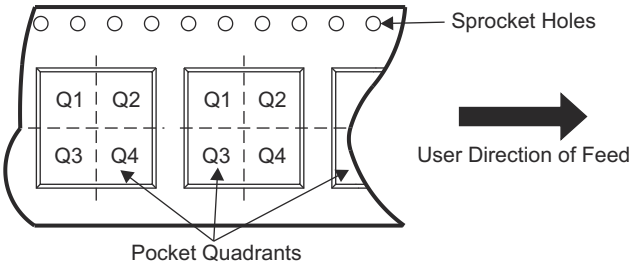

Device	Package Type	Package Drawing	Pins	SPQ	Reel Diameter (mm)	Reel Width W1 (mm)	A0 (mm)	B0 (mm)	K0 (mm)	P1 (mm)	W (mm)	Pin1 Quadrant
TPS563201DDCR	SOT-23-THIN	DDC	6	3000	180.0	8.4	3.2	3.2	1.4	4.0	8.0	Q3
TPS563201DDCR	SOT-23-THIN	DDC	6	3000	180.0	8.4	3.2	3.2	1.4	4.0	8.0	Q3
TPS563201DDCT	SOT-23-THIN	DDC	6	250	180.0	8.4	3.2	3.2	1.4	4.0	8.0	Q3
TPS563201DDCT	SOT-23-THIN	DDC	6	250	180.0	8.4	3.2	3.2	1.4	4.0	8.0	Q3
TPS563208DDCR	SOT-23-THIN	DDC	6	3000	180.0	8.4	3.2	3.2	1.4	4.0	8.0	Q3
TPS563208DDCR	SOT-23-THIN	DDC	6	3000	180.0	8.4	3.2	3.2	1.4	4.0	8.0	Q3
TPS563208DDCT	SOT-23-THIN	DDC	6	250	180.0	8.4	3.2	3.2	1.4	4.0	8.0	Q3

Copyright © 2024 Texas Instruments Incorporated

TAPE AND REEL BOX DIMENSIONS

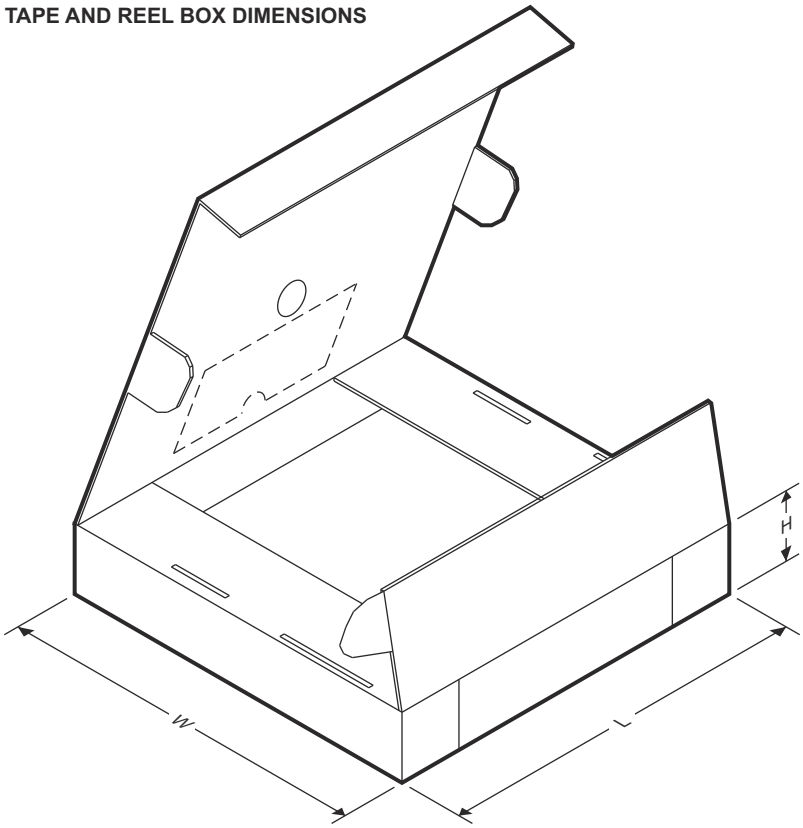

Device	Package Type	Package Drawing	Pins	SPQ	Length (mm)	Width (mm)	Height (mm)
TPS563201DDCR	SOT-23-THIN	DDC	6	3000	210.0	185.0	35.0
TPS563201DDCR	SOT-23-THIN	DDC	6	3000	210.0	185.0	35.0
TPS563201DDCT	SOT-23-THIN	DDC	6	250	210.0	185.0	35.0
TPS563201DDCT	SOT-23-THIN	DDC	6	250	210.0	185.0	35.0
TPS563208DDCR	SOT-23-THIN	DDC	6	3000	210.0	185.0	35.0
TPS563208DDCR	SOT-23-THIN	DDC	6	3000	210.0	185.0	35.0
TPS563208DDCT	SOT-23-THIN	DDC	6	250	210.0	185.0	35.0

Copyright © 2024 Texas Instruments Incorporated

PACKAGE OUTLINE

DDC0006A

SOT-23 - 1.1 max height

SMALL OUTLINE TRANSISTOR

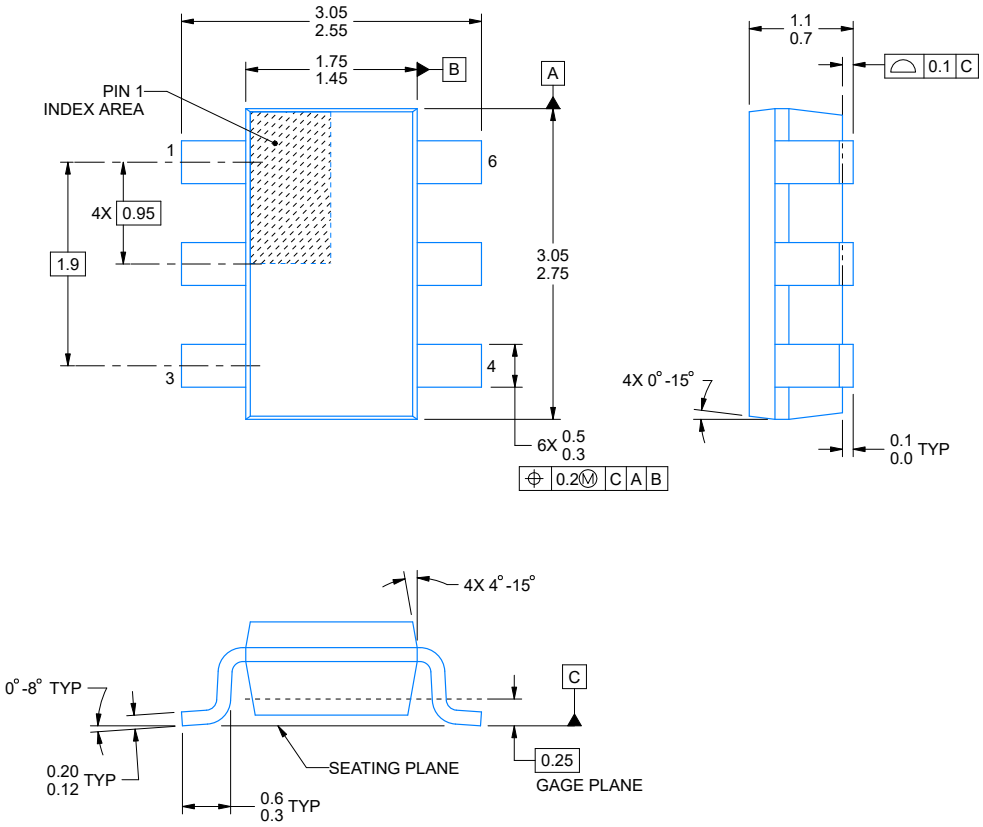

NOTES:

1. All linear dimensions are in millimeters. Any dimensions in parenthesis are for reference only. Dimensioning and tolerancing per ASME Y14.5M.
2. This drawing is subject to change without notice.
3. Reference JEDEC MO-193.

Copyright © 2024 Texas Instruments Incorporated

EXAMPLE BOARD LAYOUT

DDC0006A **SOT-23 - 1.1 max height**

SMALL OUTLINE TRANSISTOR

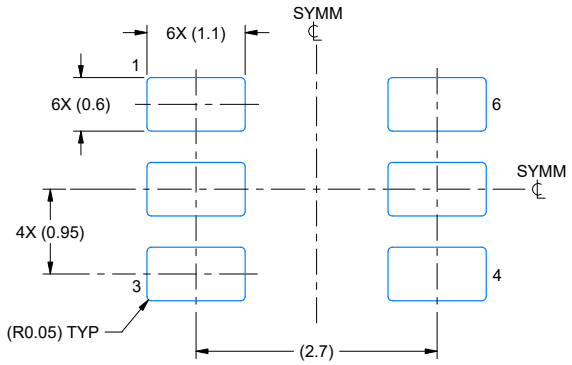

LAND PATTERN EXAMPLE
EXPLOSED METAL SHOWN
SCALE:15X

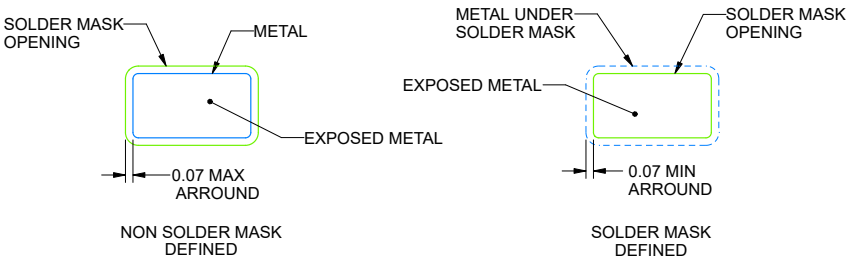

SOLDERMASK DETAILS

4214841/E 08/2024

NOTES: (continued)

4. Publication IPC-7351 may have alternate designs.
5. Solder mask tolerances between and around signal pads can vary based on board fabrication site.

Copyright © 2024 Texas Instruments Incorporated

EXAMPLE STENCIL DESIGN

DDC0006A **SOT-23 - 1.1 max height**

SMALL OUTLINE TRANSISTOR

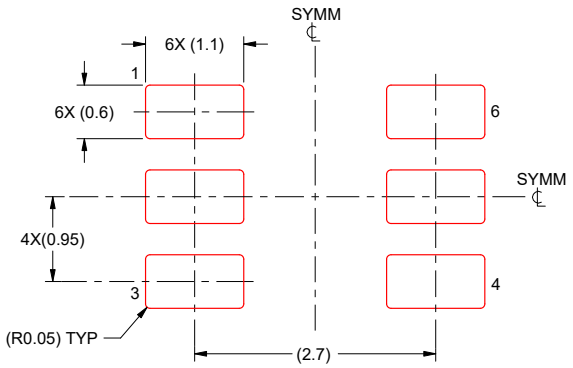

SOLDER PASTE EXAMPLE
BASED ON 0.125 THICK STENCIL
SCALE:15X

4214841/E 08/2024

NOTES: (continued)

6. Laser cutting apertures with trapezoidal walls and rounded corners may offer better paste release. IPC-7525 may have alternate design recommendations.
7. Board assembly site may have different recommendations for stencil design.

Copyright © 2024 Texas Instruments Incorporated

PACKAGING INFORMATION

Orderable part number	Status (1)	Material type (2)	Package | Pins	Package qty | Carrier	RoHS (3)	Lead finish/ Ball material (4)	MSL rating/ Peak reflow (5)	Op temp (°C)	Part marking (6)
TPS563201DDCR	Active	Production	SOT-23-THIN (DDC) | 6	3000 | LARGE T&R	Yes	Call TI | Sn	Level-1-260C-UNLIM	-40 to 125	3201
TPS563201DDCR.A	Active	Production	SOT-23-THIN (DDC) | 6	3000 | LARGE T&R	Yes	SN	Level-1-260C-UNLIM	-40 to 125	3201
TPS563201DDCR.B	Active	Production	SOT-23-THIN (DDC) | 6	3000 | LARGE T&R	Yes	SN	Level-1-260C-UNLIM	-40 to 125	3201
TPS563201DDCT	Active	Production	SOT-23-THIN (DDC) | 6	250 | SMALL T&R	Yes	Call TI | Sn	Level-1-260C-UNLIM	-40 to 125	3201
TPS563201DDCT.A	Active	Production	SOT-23-THIN (DDC) | 6	250 | SMALL T&R	Yes	SN	Level-1-260C-UNLIM	-40 to 125	3201
TPS563201DDCT.B	Active	Production	SOT-23-THIN (DDC) | 6	250 | SMALL T&R	Yes	SN	Level-1-260C-UNLIM	-40 to 125	3201
TPS563208DDCR	Active	Production	SOT-23-THIN (DDC) | 6	3000 | LARGE T&R	Yes	Call TI | Sn	Level-1-260C-UNLIM	-40 to 125	3208
TPS563208DDCR.A	Active	Production	SOT-23-THIN (DDC) | 6	3000 | LARGE T&R	Yes	SN	Level-1-260C-UNLIM	-40 to 125	3208
TPS563208DDCR.B	Active	Production	SOT-23-THIN (DDC) | 6	3000 | LARGE T&R	Yes	SN	Level-1-260C-UNLIM	-40 to 125	3208
TPS563208DDCT	Active	Production	SOT-23-THIN (DDC) | 6	250 | SMALL T&R	Yes	Call TI | Sn	Level-1-260C-UNLIM	-40 to 125	3208
TPS563208DDCT.A	Active	Production	SOT-23-THIN (DDC) | 6	250 | SMALL T&R	Yes	SN	Level-1-260C-UNLIM	-40 to 125	3208
TPS563208DDCT.B	Active	Production	SOT-23-THIN (DDC) | 6	250 | SMALL T&R	Yes	SN	Level-1-260C-UNLIM	-40 to 125	3208

(1) **Status:** For more details on status, see our product life cycle.

(2) **Material type:** When designated, preproduction parts are prototypes/experimental devices, and are not yet approved or released for full production. Testing and final process, including without limitation quality assurance, reliability performance testing, and/or process qualification, may not yet be complete, and this item is subject to further changes or possible discontinuation. If available for ordering, purchases will be subject to an additional waiver at checkout, and are intended for early internal evaluation purposes only. These items are sold without warranties of any kind.

(3) **RoHS values:** Yes, No, RoHS Exempt. See the TI RoHS Statement for additional information and value definition.

(4) **Lead finish/Ball material:** Parts may have multiple material finish options. Finish options are separated by a vertical ruled line. Lead finish/Ball material values may wrap to two lines if the finish value exceeds the maximum column width.

(5) **MSL rating/Peak reflow:** The moisture sensitivity level ratings and peak solder (reflow) temperatures. In the event that a part has multiple moisture sensitivity ratings, only the lowest level per JEDEC standards is shown. Refer to the shipping label for the actual reflow temperature that will be used to mount the part to the printed circuit board.

(6) **Part marking:** There may be an additional marking, which relates to the logo, the lot trace code information, or the environmental category of the part.

Multiple part markings will be inside parentheses. Only one part marking contained in parentheses and separated by a "~" will appear on a part. If a line is indented then it is a continuation of the previous line and the two combined represent the entire part marking for that device.

Important Information and Disclaimer: The information provided on this page represents TI's knowledge and belief as of the date that it is provided. TI bases its knowledge and belief on information provided by third parties, and makes no representation or warranty as to the accuracy of such information. Efforts are underway to better integrate information from third parties. TI has taken and continues to take reasonable steps to provide representative and accurate information but may not have conducted destructive testing or chemical analysis on incoming materials and chemicals. TI and TI suppliers consider certain information to be proprietary, and thus CAS numbers and other limited information may not be available for release.

In no event shall TI's liability arising out of such information exceed the total purchase price of the TI part(s) at issue in this document sold by TI to Customer on an annual basis.

IMPORTANT NOTICE AND DISCLAIMER

TI PROVIDES TECHNICAL AND RELIABILITY DATA (INCLUDING DATA SHEETS), DESIGN RESOURCES (INCLUDING REFERENCE DESIGNS), APPLICATION OR OTHER DESIGN ADVICE, WEB TOOLS, SAFETY INFORMATION, AND OTHER RESOURCES “AS IS” AND WITH ALL FAULTS, AND DISCLAIMS ALL WARRANTIES, EXPRESS AND IMPLIED, INCLUDING WITHOUT LIMITATION ANY IMPLIED WARRANTIES OF MERCHANTABILITY, FITNESS FOR A PARTICULAR PURPOSE OR NON-INFRINGEMENT OF THIRD PARTY INTELLECTUAL PROPERTY RIGHTS.

These resources are intended for skilled developers designing with TI products. You are solely responsible for (1) selecting the appropriate TI products for your application, (2) designing, validating and testing your application, and (3) ensuring your application meets applicable standards, and any other safety, security, regulatory or other requirements.

These resources are subject to change without notice. TI grants you permission to use these resources only for development of an application that uses the TI products described in the resource. Other reproduction and display of these resources is prohibited. No license is granted to any other TI intellectual property right or to any third party intellectual property right. TI disclaims responsibility for, and you will fully indemnify TI and its representatives against, any claims, damages, costs, losses, and liabilities arising out of your use of these resources.

TI’s products are provided subject to TI’s Terms of Sale or other applicable terms available either on ti.com or provided in conjunction with such TI products. TI’s provision of these resources does not expand or otherwise alter TI’s applicable warranties or warranty disclaimers for TI products.

TI objects to and rejects any additional or different terms you may have proposed.

Mailing Address: Texas Instruments, Post Office Box 655303, Dallas, Texas 75265
Copyright © 2025, Texas Instruments Incorporated