LM4666 Boomer® Audio Power Amplifier Series Filterless High Efficiency Stereo 1.2W Switching Audio Amplifier

Check for Samples: LM4666, LM4666SDBD

FEATURES

- **No Output Filter Required for Inductive Transducers**
- **Selectable Gain of 6dB or 12dB**
- **Very Fast Turn On Time: 6ms (typ)**
- **Minimum External Components**
- **"Click and Pop" Suppression Circuitry**
- **Micro-Power Shutdown Mode**
- **Short Circuit Protection**
- **Available in Space-Saving NHK0014A Package**

APPLICATIONS

- **Mobile Phones**
- **PDAs**
- **Portable Electronic Devices**

KEY SPECIFICATIONS

- **Efficiency at 3V, 100mW into 8Ω Transducer: 79% (typ)**
- **Efficiency at 3V, 450mW into 8Ω Transducer: 84% (typ)**
- **Efficiency at 5V, 1W into 8Ω Transducer: 85% (typ)**
- **Total Quiescent Power Supply Current: 7.0mA (typ)**
- **Total Shutdown Power Supply Current: 0.02μA (typ)**
- **Single supply range: 2.8V to 5.5V**

DESCRIPTION

The LM4666 is a fully integrated single-supply high efficiency switching audio amplifier. It features an innovative modulator that eliminates the LC output filter used with typical switching amplifiers. Eliminating the output filter reduces parts count, simplifies circuit design, and reduces board area. The LM4666 processes analog inputs with a delta-sigma modulation technique that lowers output noise and THD when compared to conventional pulse width modulators.

The LM4666 is designed to meet the demands of mobile phones and other portable communication devices. Operating on a single 3V supply, it is capable of driving 8Ω transducer loads at a continuous average output of 450mW with less than 1%THD+N. Its flexible power supply requirements allow operation from 2.8V to 5.5V.

The LM4666 has high efficiency with an 8Ω transducer load compared to a typical Class AB amplifier. With a 3V supply, the IC's efficiency for a 100mW power level is 79%, reaching 84% at 450mW output power.

The LM4666 features a low-power consumption shutdown mode. Shutdown may be enabled by driving the Shutdown pin to a logic low (GND).

The LM4666 has fixed selectable gain of either 6dB or 12dB. The LM4666 has short circuit protection against a short from the outputs to V_{DD} or GND.

Please be aware that an important notice concerning availability, standard warranty, and use in critical applications of Texas Instruments semiconductor products and disclaimers thereto appears at the end of this data sheet.

All trademarks are the property of their respective owners.

PRODUCTION DATA information is current as of publication date. Products conform to specifications per the terms of the Texas Instruments standard warranty. Production processing does not necessarily include testing of all parameters.

Copyright © 2004–2013, Texas Instruments Incorporated

Typical Application

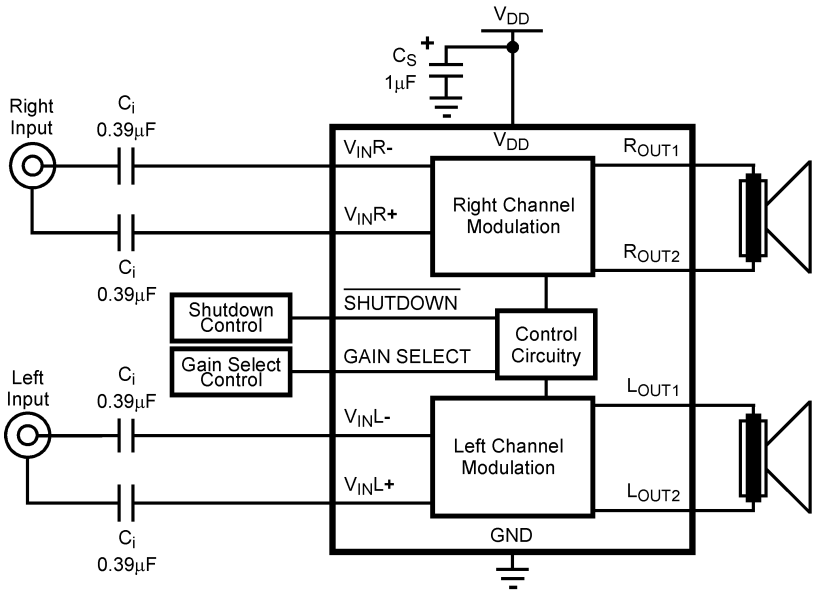

Figure 1. Typical Audio Amplifier Application Circuit

Connection Diagram

Top View

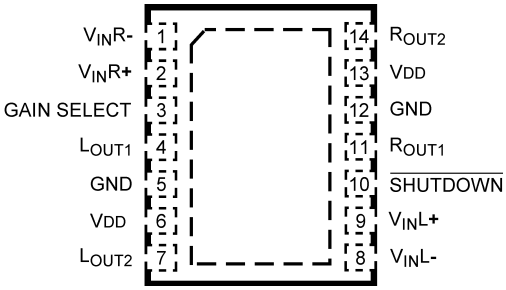

Figure 2. WSON Package
See Package Number NHK0014A

Copyright © 2004–2013, Texas Instruments Incorporated

These devices have limited built-in ESD protection. The leads should be shorted together or the device placed in conductive foam during storage or handling to prevent electrostatic damage to the MOS gates.

Absolute Maximum Ratings[1][2][3]

Supply Voltage[1]		6.0V
Storage Temperature		−65°C to +150°C
Voltage at Any Input Pin		V_{DD} + 0.3V ≥ V ≥ GND - 0.3V
Power Dissipation[4]		Internally Limited
ESD Susceptibility, pins 4, 7, 11, 14[5]		1kV
ESD Susceptibility, all other pins[5]		2.0kV
ESD Susceptibility[6]		200V
Junction Temperature (T_J)		150°C
Thermal Resistance	θ_{JA} (NHK0014A)	63°C/W
	θ_{JC} (NHK0014A)	12°C/W
Soldering Information: See AN-1112 (SNVA009) "microSMD Wafers Level Chip Scale Package."		

(1) All voltages are measured with respect to the ground pin, unless otherwise specified.
(2) Absolute Maximum Ratings indicate limits beyond which damage to the device may occur. Operating Ratings indicate conditions for which the device is functional, but do not ensure specific performance limits. Electrical Characteristics state DC and AC electrical specifications under particular test conditions which ensure specific performance limits. This assumes that the device is within the Operating Ratings. Specifications are not specified for parameters where no limit is given, however, the typical value is a good indication of device performance.
(3) If Military/Aerospace specified devices are required, please contact the Texas Instruments Sales Office/ Distributors for availability and specifications.
(4) The maximum power dissipation must be derated at elevated temperatures and is dictated by T_{JMAX}, θ_{JA}, and the ambient temperature T_A. The maximum allowable power dissipation is $P_{DMAX} = (T_{JMAX}–T_A)/\theta_{JA}$ or the number given in Absolute Maximum Ratings, whichever is lower. For the LM4666, T_{JMAX} = 150°C. The typical θ_{JA} is 63°C/W and the typical θ_{JC} is 12°C/W for the NHK0014A package.
(5) Human body model, 100pF discharged through a 1.5kΩ resistor.
(6) Machine Model, 220pF – 240pF discharged through all pins.

Operating Ratings[1][2]

Temperature Range	$T_{MIN} \le T_A \le T_{MAX}$	−40°C ≤ T_A ≤ 85°C
Supply Voltage		2.8V ≤ V_{DD} ≤ 5.5V

(1) All voltages are measured with respect to the ground pin, unless otherwise specified.
(2) Absolute Maximum Ratings indicate limits beyond which damage to the device may occur. Operating Ratings indicate conditions for which the device is functional, but do not ensure specific performance limits. Electrical Characteristics state DC and AC electrical specifications under particular test conditions which ensure specific performance limits. This assumes that the device is within the Operating Ratings. Specifications are not specified for parameters where no limit is given, however, the typical value is a good indication of device performance.

Copyright © 2004–2013, Texas Instruments Incorporated

Electrical Characteristics V_{DD} = 5V(1)(2)

The following specifications apply for V_{DD} = 5V and R_L = 15µH + 8Ω + 15µH unless otherwise specified. Limits apply for T_A = 25°C.

Parameter		Test Conditions	LM4666		Units (Limits)
			Typ(3)	Limit(4)(5)	
I_{DD}	Quiescent Power Supply Current	V_{IN} = 0V, No Load V_{IN} = 0V, R_L = 15µH + 8Ω + 15µH	15 16		mA mA
I_{SD}	Shutdown Current	V_{SD} = GND(6)	0.02		µA
V_{SDIH}	Shutdown Voltage Input High		1.2		V
V_{SDIL}	Shutdown Voltage Input Low		1.1		V
V_{GSIH}	Gain Select Input High		1.2		V
V_{GSIL}	Gain Select Input Low		1.1		V
A_V	Closed Loop Gain	$V_{Gain\ Select}$ = V_{DD}	6		dB
A_V	Closed Loop Gain	$V_{Gain\ Select}$ = GND	12		dB
V_{OS}	Output Offset Voltage		10		mV
T_{WU}	Wake-up Time		6		ms
P_o	Output Power	THD = 1% (max), f = 1kHz, 22kHz BW	1.2		W
THD+N	Total Harmonic Distortion+Noise	P_O = 100mW$_{RMS}$/Channel, f_{IN} = 1kHz, 22kHz BW, Both channels in phase	0.65		%
X_{TALK}	Channel Separation	P_O = 100mW$_{RMS}$, f = 1kHz	57		dB
R_{IN}	Differential Input Resistance	$V_{Gain\ Select}$ = V_{DD}	90		kΩ
		$V_{Gain\ Select}$ = GND	60		kΩ
PSRR	Power Supply Rejection Ratio	V_{Ripple} = 100mV$_{RMS}$ sine wave, f_{RIPPLE} = 217Hz Inputs terminated to AC GND	60		dB
		V_{Ripple} = 100mV$_{RMS}$ sine wave, f_{RIPPLE} = 217Hz P_{OUT} = 10mW,1kHz	65		dB
CMRR	Common Mode Rejection Ratio	V_{Ripple} = 100mV$_{RMS}$, f_{Ripple} = 217Hz, Input referred	48		dB
SNR	Signal to Noise Ratio	P_O = 1W$_{RMS}$; A-Weighted Filter	83		dB
ε_{OUT}	Output Noise	A-Weighted filter, V_{in} = 0V	200		µV

(1) All voltages are measured with respect to the ground pin, unless otherwise specified.
(2) Absolute Maximum Ratings indicate limits beyond which damage to the device may occur. Operating Ratings indicate conditions for which the device is functional, but do not ensure specific performance limits. Electrical Characteristics state DC and AC electrical specifications under particular test conditions which ensure specific performance limits. This assumes that the device is within the Operating Ratings. Specifications are not specified for parameters where no limit is given, however, the typical value is a good indication of device performance.
(3) Typical specifications are specified at 25°C and represent the parametric norm.
(4) Tested limits are specified to AOQL (Average Outgoing Quality Level).
(5) Datasheet min/max specification limits are specified by design, test, or statistical analysis.
(6) Shutdown current is measured in a normal room environment. Exposure to direct sunlight will increase I_{SD} by a maximum of 2µA. The Shutdown pin should be driven as close as possible to GND for minimal shutdown current and to V_{DD} for the best THD performance in PLAY mode. See the Application Information section under SHUTDOWN FUNCTION for more information.

Copyright © 2004–2013, Texas Instruments Incorporated

Electrical Characteristics V_{DD} = 3V(1)(2)

The following specifications apply for V_{DD} = 3V and R_L = 15µH + 8Ω + 15µH unless otherwise specified. Limits apply for T_A = 25°C.

Parameter		Test Conditions	LM4666		Units (Limits)
			Typ(3)	Limit(4)(5)	
I_{DD}	Quiescent Power Supply Current	V_{IN} = 0V, No Load V_{IN} = 0V, R_L = 15µH + 8Ω + 15µH	6.5 7.0	10	mA (max)
I_{SD}	Shutdown Current	V_{SD} = GND(6)	0.02	2.0	µA (max)
V_{SDIH}	Shutdown Voltage Input High		1.0	1.4	V (min)
V_{SDIL}	Shutdown Voltage Input Low		0.8	0.4	V (max)
V_{GSIH}	Gain Select Input High		1.0	1.4	V (min)
V_{GSIL}	Gain Select Input Low		0.8	0.4	V (max)
A_V	Closed Loop Gain	$V_{Gain\ Select}$ = V_{DD}	6	5.25 6.75	dB (min) dB (max)
A_V	Closed Loop Gain	$V_{Gain\ Select}$ = GND	12	11.25 12.75	dB (min) dB (max)
V_{OS}	Output Offset Voltage		10	35	mV (max)
T_{WU}	Wake-up Time		6		ms
P_o	Output Power	THD = 1% (max); f = 1kHz, 22kHz BW	450	400	mW (min)
THD+N	Total Harmonic Distortion+Noise	P_O = 100mW$_{RMS}$/Channel, f_{IN} = 1kHz, 22kHz BW, Both channels in phase	0.65		%
X_{TALK}	Channel Separation	P_O = 100mW$_{RMS}$, f = 1kHz	57		dB
R_{IN}	Differential Input Resistance	$V_{Gain\ Select}$ = V_{DD}	90		kΩ
		$V_{Gain\ Select}$ = GND	60		kΩ
PSRR	Power Supply Rejection Ratio	V_{ripple} = 100mV$_{RMS}$ sine wave, f_{RIPPLE} = 217Hz, Inputs terminated to AC GND	60		dB
		V_{Ripple} = 100mV$_{RMS}$ sine wave, f_{RIPPLE} = 217Hz, P_{OUT} = 10mW,1kHz	65		dB
CMRR	Common Mode Rejection Ratio	V_{Ripple} = 100mV$_{RMS}$, f_{Ripple} = 217Hz, Input referred	48		dB
SNR	Signal to Noise Ratio	P_O = 400mW$_{RMS}$, A-Weighted Filter	83		dB
ε_{OUT}	Output Noise	A-Weighted filter, V_{in} = 0V	125		µV

(1) All voltages are measured with respect to the ground pin, unless otherwise specified.
(2) Absolute Maximum Ratings indicate limits beyond which damage to the device may occur. Operating Ratings indicate conditions for which the device is functional, but do not ensure specific performance limits. Electrical Characteristics state DC and AC electrical specifications under particular test conditions which ensure specific performance limits. This assumes that the device is within the Operating Ratings. Specifications are not specified for parameters where no limit is given, however, the typical value is a good indication of device performance.
(3) Typical specifications are specified at 25°C and represent the parametric norm.
(4) Tested limits are specified to AOQL (Average Outgoing Quality Level).
(5) Datasheet min/max specification limits are specified by design, test, or statistical analysis.
(6) Shutdown current is measured in a normal room environment. Exposure to direct sunlight will increase I_{SD} by a maximum of 2µA. The Shutdown pin should be driven as close as possible to GND for minimal shutdown current and to V_{DD} for the best THD performance in PLAY mode. See the Application Information section under SHUTDOWN FUNCTION for more information.

External Components Description

(Figure 1)

Components		Functional Description
1.	C_S	Supply bypass capacitor which provides power supply filtering. Refer to the POWER SUPPLY BYPASSING section for information concerning proper placement and selection of the supply bypass capacitor.
2.	C_I	Input AC coupling capacitor which blocks the DC voltage at the amplifier's input terminals.

Copyright © 2004–2013, Texas Instruments Incorporated

Typical Performance Characteristics[1]

THD+N vs Frequency
V_{DD} = 5V, R_L = 15µH + 8Ω + 15µH
P_{OUT} = 100mW/Channel, 30kHz BW

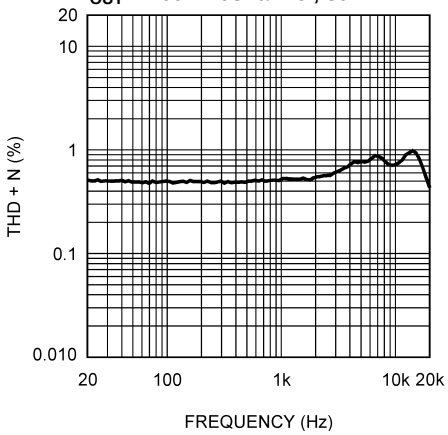

Figure 3.

THD+N vs Frequency
V_{DD} = 3V, R_L = 15µH + 8Ω + 15µH
P_{OUT} = 100mW/Channel, 30kHz BW

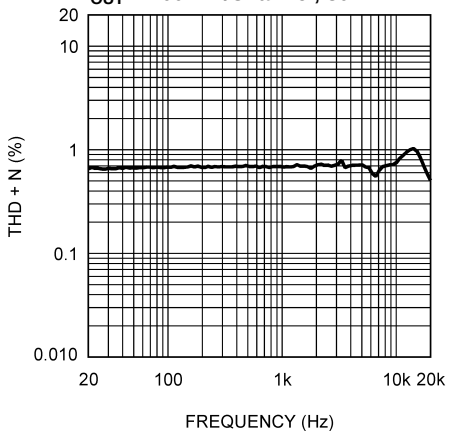

Figure 4.

THD+N vs Frequency
V_{DD} = 3V, R_L = 15µH + 4Ω + 15µH
P_{OUT} = 100mW/Channel, 30kHz BW

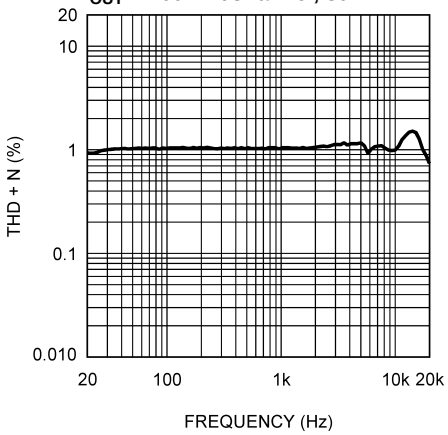

Figure 5.

THD+N vs Output Power/Channel
V_{DD} = 5V, R_L = 15µH + 8Ω + 15µH
f = 1kHz, 22kHz BW

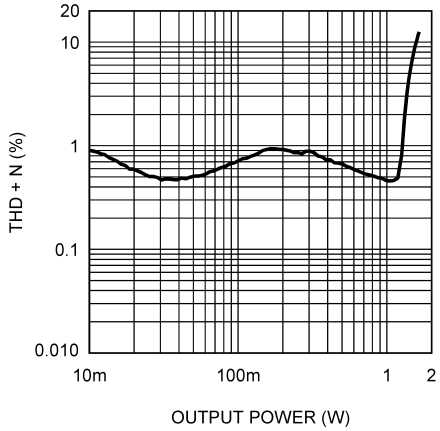

Figure 6.

THD+N vs Output Power/Channel
V_{DD} = 3V, R_L = 15µH + 4Ω + 15µH
f = 1kHz, 22kHz BW

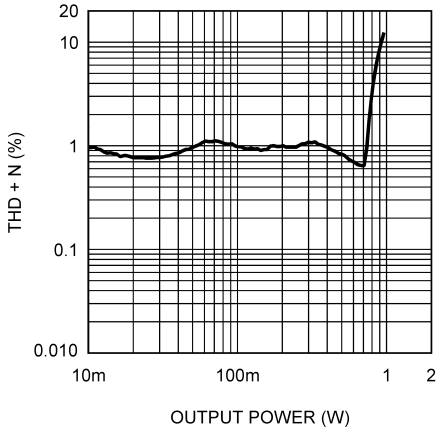

Figure 7.

THD+N vs Output Power/Channel
V_{DD} = 3V, R_L = 15µH + 8Ω + 15µH
f = 1kHz, 22kHz BW

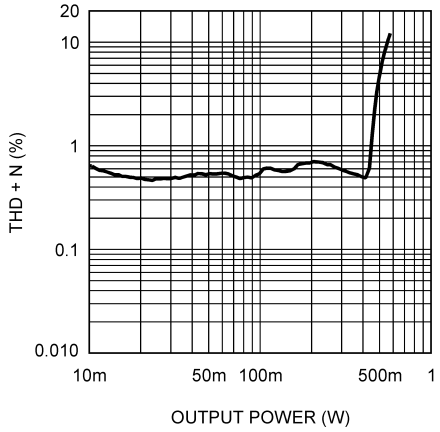

Figure 8.

(1) The performance graphs were taken using the Audio Precision AUX–0025 Switching Amplifier Measurement Filter in series with the LC filter on the demo board.

Copyright © 2004–2013, Texas Instruments Incorporated

Typical Performance Characteristics[1] (continued)

CMRR vs Frequency
V_{DD} = 5V, R_L = 15µH + 8Ω + 15µH
V_{CM} = 100mV_{RMS} Sine Wave, 30kHz BW

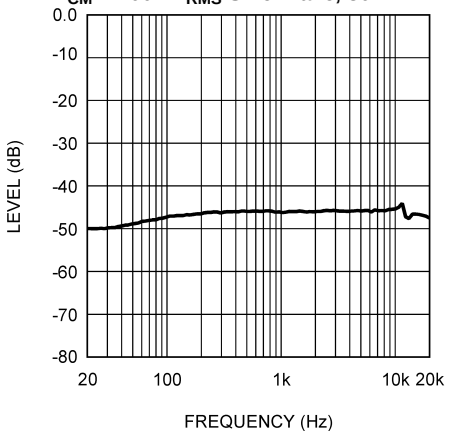

Figure 9.

CMRR vs Frequency
V_{DD} = 3V, R_L = 15µH + 8Ω + 15µH
V_{CM} = 100mV_{RMS} Sine Wave, 30kHz BW

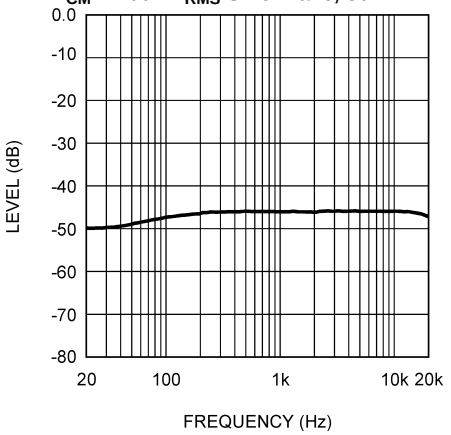

Figure 10.

PSRR vs Frequency
V_{DD} = 5V, R_L = 15µH + 8Ω + 15µH
V_{Ripple} = 100mV_{RMS} Sine Wave, 22kHz BW

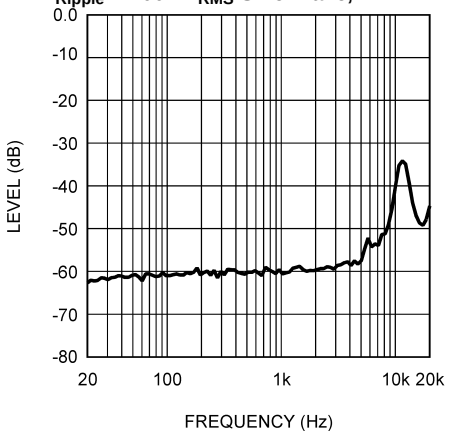

Figure 11.

PSRR vs Frequency
V_{DD} = 3V, R_L = 15µH + 8Ω + 15µH
V_{Ripple} = 100mV_{RMS} Sine Wave, 22kHz BW

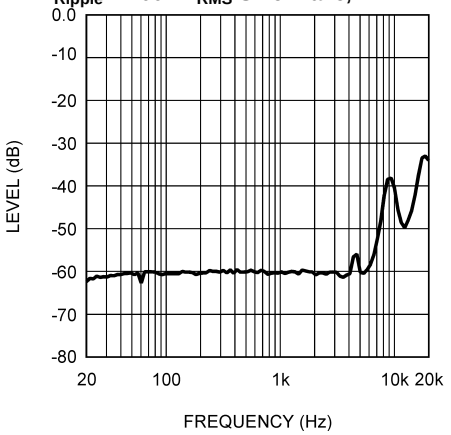

Figure 12.

Efficiency and Power Dissipation vs Output Power
V_{DD} = 5V, R_L = 15µH + 8Ω + 15µH, f = 1kHz, THD ≤ 1%

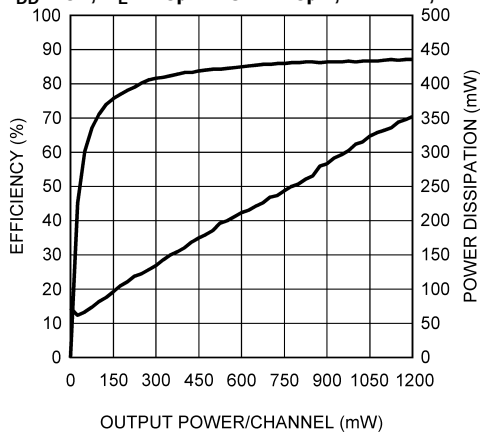

Figure 13.

Efficiency and Power Dissipation vs Output Power
V_{DD} = 3V, R_L = 15µH + 8Ω + 15µH, f = 1kHz, THD ≤ 1%

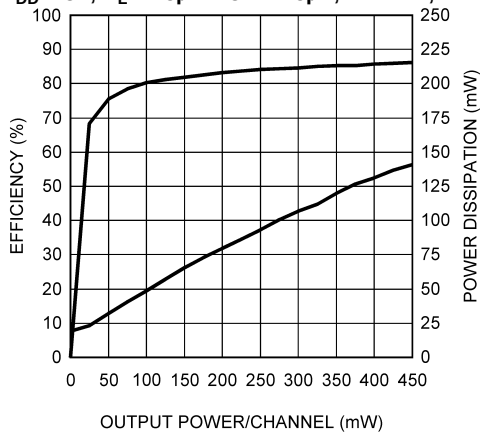

Figure 14.

Copyright © 2004–2013, Texas Instruments Incorporated

Typical Performance Characteristics[1] (continued)

Efficiency and Power Dissipation vs Output Power
V_{DD} = 3V, R_L = 15µH + 4Ω + 15µH, f = 1kHz, THD ≤ 1%

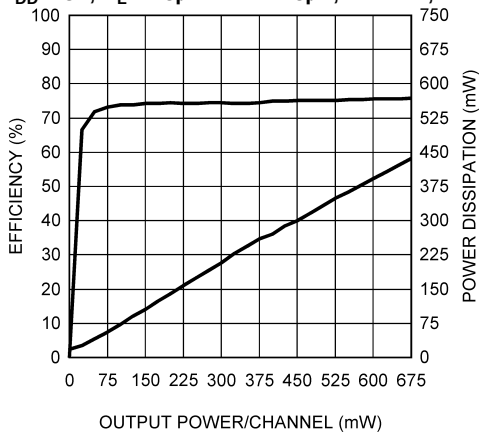

Figure 15.

Gain Select Threshold
V_{DD} = 3V

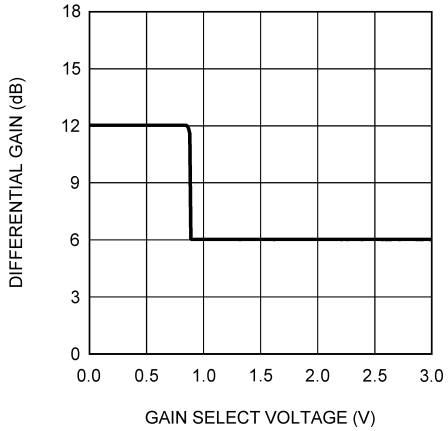

Figure 16.

Gain Select Threshold
V_{DD} = 5V

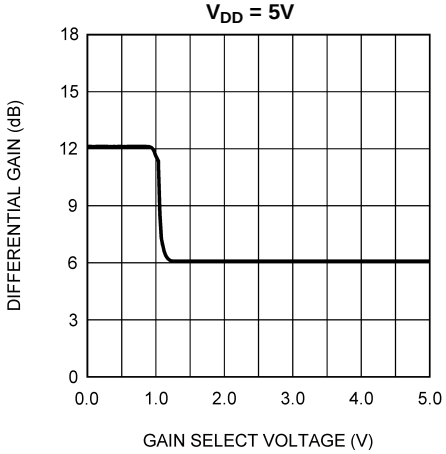

Figure 17.

Gain Select Threshold vs Supply Voltage
R_L = 15µH + 8Ω + 15µH

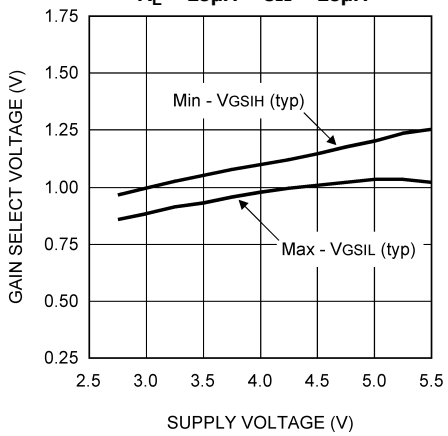

Figure 18.

Output Power/Channel vs Supply Voltage
R_L = 15µH + 8Ω + 15µH, f = 1kHz
22kHz BW

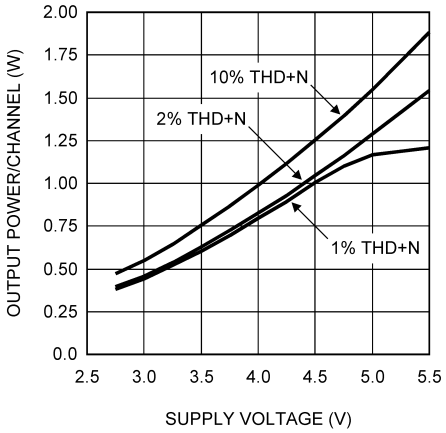

Figure 19.

Output Power/Channel vs Supply Voltage
R_L = 15µH + 4Ω + 15µH, f = 1kHz
22kHz BW

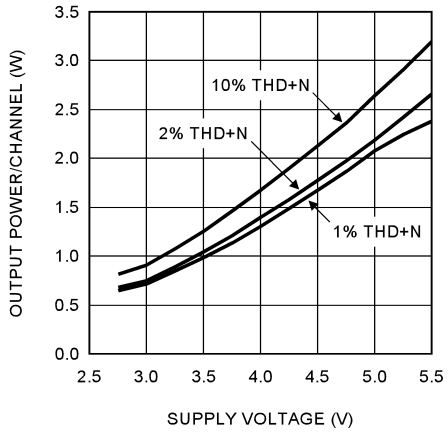

Figure 20.

Copyright © 2004–2013, Texas Instruments Incorporated

Typical Performance Characteristics[1] (continued)

Shutdown Threshold
V_{DD} = 5V

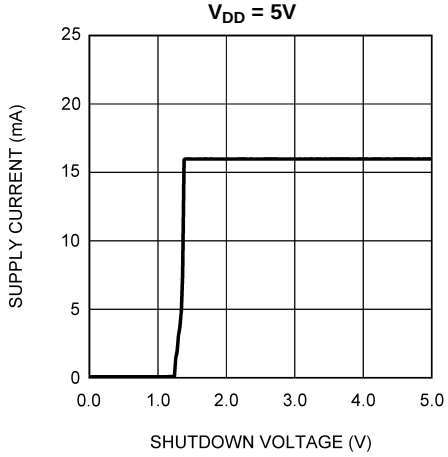

Figure 21.

Shutdown Threshold
V_{DD} = 3V

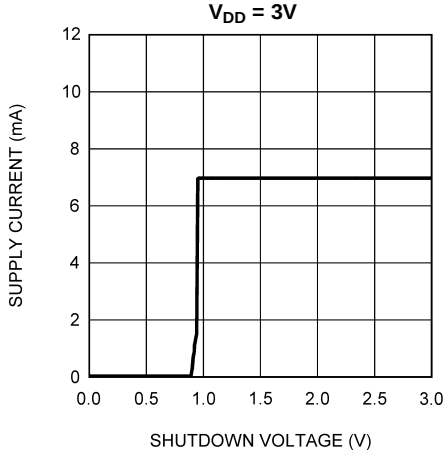

Figure 22.

Shutdown Threshold vs Supply Voltage
R_L = 15µH + 8Ω + 15µH

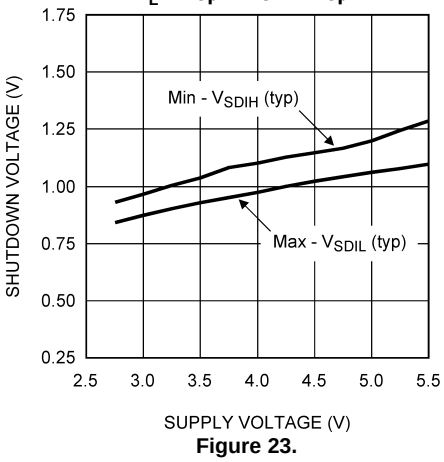

Figure 23.

Supply Current vs Shutdown Voltage
R_L = 15µH + 8Ω + 15µH

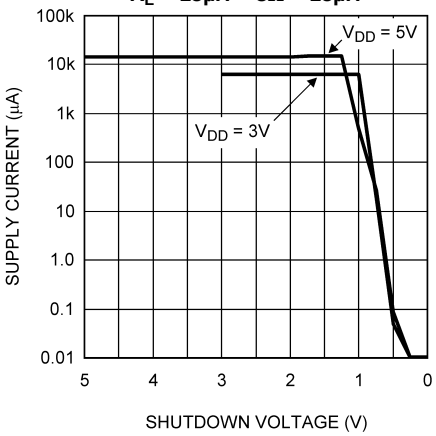

Figure 24.

Supply Current vs Supply Voltage
R_L = 15µH + 8Ω + 15µH

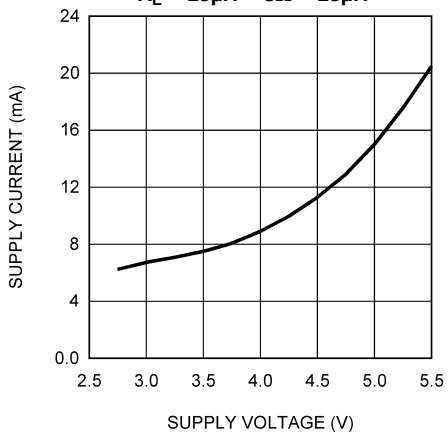

Figure 25.

Copyright © 2004–2013, Texas Instruments Incorporated

APPLICATION INFORMATION

GENERAL AMPLIFIER FUNCTION

The output signals generated by the LM4666 consist of two, BTL connected, output signals that pulse momentarily from near ground potential to V_{DD} on each channel. The two outputs on a given channel can pulse independently with the exception that they both may never pulse simultaneously as this would result in zero volts across the BTL connected load. The minimum width of each pulse is approximately 160ns. However, pulses on the same output can occur sequentially, in which case they are concatenated and appear as a single wider pulse to achieve an effective 100% duty cycle. This results in maximum audio output power for a given supply voltage and load impedance. The LM4666 can achieve much higher efficiencies than class AB amplifiers while maintaining acceptable THD performance.

The short (160ns) drive pulses emitted at the LM4666 outputs means that good efficiency can be obtained with minimal load inductance. The typical transducer load on an audio amplifier is quite reactive (inductive). For this reason, the load can act as it's own filter, so to speak. This "filter-less" switching amplifier/transducer load combination is much more attractive economically due to savings in board space and external component cost by eliminating the need for a filter.

POWER DISSIPATION AND EFFICIENCY

In general terms, efficiency is considered to be the ratio of useful work output divided by the total energy required to produce it with the difference being the power dissipated, typically, in the IC. The key here is “useful” work. For audio systems, the energy delivered in the audible bands is considered useful including the distortion products of the input signal. Sub-sonic (DC) and super-sonic components (>22kHz) are not useful. The difference between the power flowing from the power supply and the audio band power being transduced is dissipated in the LM4666 and in the transducer load. The amount of power dissipation in the LM4666 is very low. This is because the ON resistance of the switches used to form the output waveforms is typically less than 0.25Ω. This leaves only the transducer load as a potential "sink" for the small excess of input power over audio band output power. The LM4666 dissipates only a fraction of the excess power requiring no additional PCB area or copper plane to act as a heat sink.

DIFFERENTIAL AMPLIFIER EXPLANATION

As logic supply voltages continue to shrink, designers are increasingly turning to differential analog signal handling to preserve signal to noise ratios with restricted voltage swing. The LM4666 is a fully differential amplifier that features differential input and output stages. A differential amplifier amplifies the difference between the two input signals. Traditional audio power amplifiers have typically offered only single-ended inputs resulting in a 6dB reduction in signal to noise ratio relative to differential inputs. The LM4666 also offers the possibility of DC input coupling which eliminates the two external AC coupling, DC blocking capacitors. The LM4666 can be used, however, as a single ended input amplifier while still retaining it's fully differential benefits. In fact, completely unrelated signals may be placed on the input pins. The LM4666 simply amplifies the difference between the signals. A major benefit of a differential amplifier is the improved common mode rejection ratio (CMRR) over single input amplifiers. The common-mode rejection characteristic of the differential amplifier reduces sensitivity to ground offset related noise injection, especially important in high noise applications.

PCB LAYOUT CONSIDERATIONS

As output power increases, interconnect resistance (PCB traces and wires) between the amplifier, load and power supply create a voltage drop. The voltage loss on the traces between the LM4666 and the load results is lower output power and decreased efficiency. Higher trace resistance between the supply and the LM4666 has the same effect as a poorly regulated supply, increase ripple on the supply line also reducing the peak output power. The effects of residual trace resistance increases as output current increases due to higher output power, decreased load impedance or both. To maintain the highest output voltage swing and corresponding peak output power, the PCB traces that connect the output pins to the load and the supply pins to the power supply should be as wide as possible to minimize trace resistance.

Copyright © 2004–2013, Texas Instruments Incorporated

The rising and falling edges are necessarily short in relation to the minimum pulse width (160ns), having approximately 2ns rise and fall times, typical, depending on parasitic output capacitance. The inductive nature of the transducer load can also result in overshoot on one or both edges, clamped by the parasitic diodes to GND and V_{DD} in each case. From an EMI standpoint, this is an aggressive waveform that can radiate or conduct to other components in the system and cause interference. It is essential to keep the power and output traces short and well shielded if possible. Use of ground planes, beads, and micro-strip layout techniques are all useful in preventing unwanted interference.

As the distance from the LM4666 and the speakers increase the amount of EMI radiation will increase since the output wires or traces acting as antenna become more efficient with length. What is acceptable EMI is highly application specific. Ferrite chip inductors placed close to the LM4666 may be needed to reduce EMI radiation. The value of the ferrite chip is very application specific.

POWER SUPPLY BYPASSING

As with any power amplifier, proper supply bypassing is critical for low noise performance and high power supply rejection ratio (PSRR). The capacitor (C_S) location should be as close as possible to the LM4666. Typical applications employ a voltage regulator with a 10µF and a 0.1µF bypass capacitors that increase supply stability. These capacitors do not eliminate the need for bypassing on the supply pin of the LM4666. A 1µF tantalum capacitor is recommended.

SHUTDOWN FUNCTION

In order to reduce power consumption while not in use, the LM4666 contains shutdown circuitry that reduces current draw to less than 0.01µA. The trigger point for shutdown is shown as a typical value in the Electrical Characteristics Tables and in the Shutdown Hysteresis Voltage graphs found in the Typical Performance Characteristics section. It is best to switch between ground and supply for minimum current usage while in the shutdown state. While the LM4666 may be disabled with shutdown voltages in between ground and supply, the idle current will be greater than the typical value. Increased THD may also be observed with voltages less than V_{DD} on the Shutdown pin when in PLAY mode.

The LM4666 has an internal resistor connected between GND and Shutdown pins. The purpose of this resistor is to eliminate any unwanted state changes when the Shutdown pin is floating. The LM4666 will enter the shutdown state when the Shutdown pin is left floating or if not floating, when the shutdown voltage has crossed the threshold. To minimize the supply current while in the shutdown state, the Shutdown pin should be driven to GND or left floating. If the Shutdown pin is not driven to GND, the amount of additional resistor current due to the internal shutdown resistor can be found by Equation 1 below.

$$(V_{SD} - GND) / 60k\Omega \quad (1)$$

With only a 0.5V difference, an additional 8.3µA of current will be drawn while in the shutdown state.

GAIN SELECTION FUNCTION

The LM4666 has fixed selectable gain to minimize external components, increase flexibility and simplify design. For a differential gain of 6dB, the Gain Select pin should be permanently connected to V_{DD} or driven to a logic high level. For a differential gain of 12dB, the Gain Select pin should be permanently connected to GND or driven to a logic low level. The gain of the LM4666 can be switched while the amplifier is in PLAY mode driving a load with a signal without damage to the IC. The voltage on the Gain Select pin should be switched quickly between GND (logic low) and V_{DD} (logic high) to eliminate any possible audible artifacts from appearing at the output. For typical threshold voltages for the Gain Select function, refer to the Gain Threshold Voltages graph in the Typical Performance Characteristics section.

Copyright © 2004–2013, Texas Instruments Incorporated

CIRCUIT CONFIGURATIONS

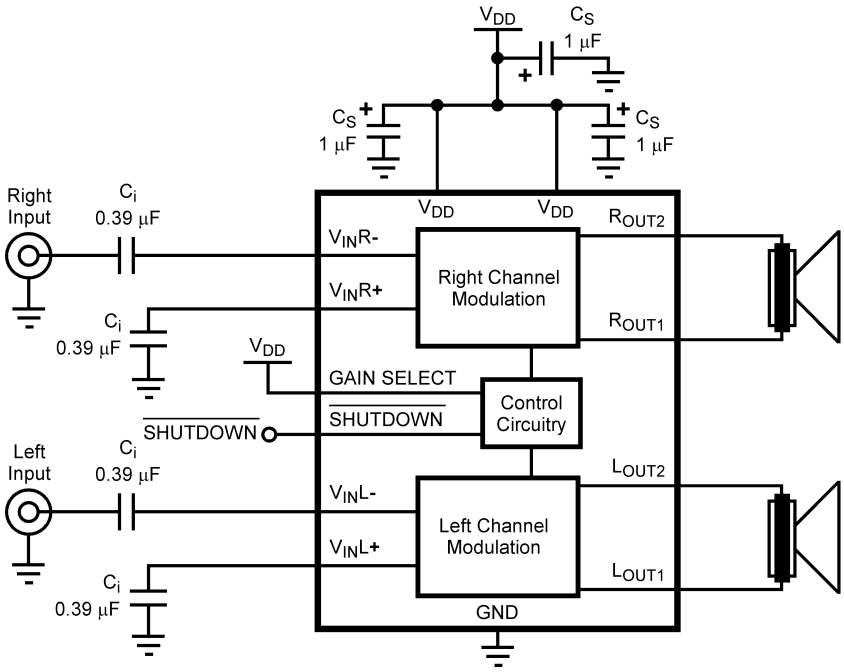

Figure 26. Single-Ended Input with Low Gain Selection Configuration

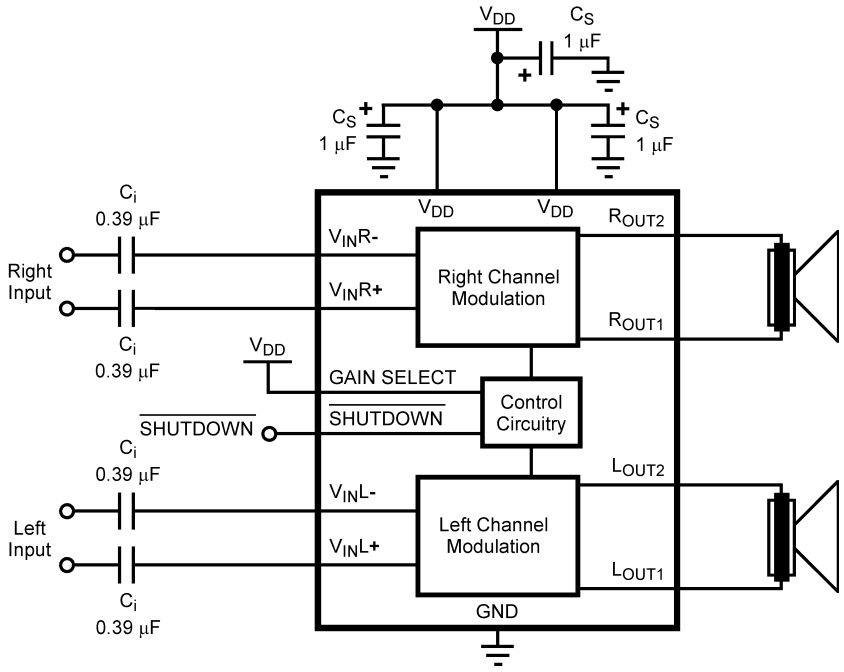

Figure 27. Differential Input with Low Gain Selection Configuration

Copyright © 2004–2013, Texas Instruments Incorporated

REFERENCE DESIGN BOARD SCHEMATIC

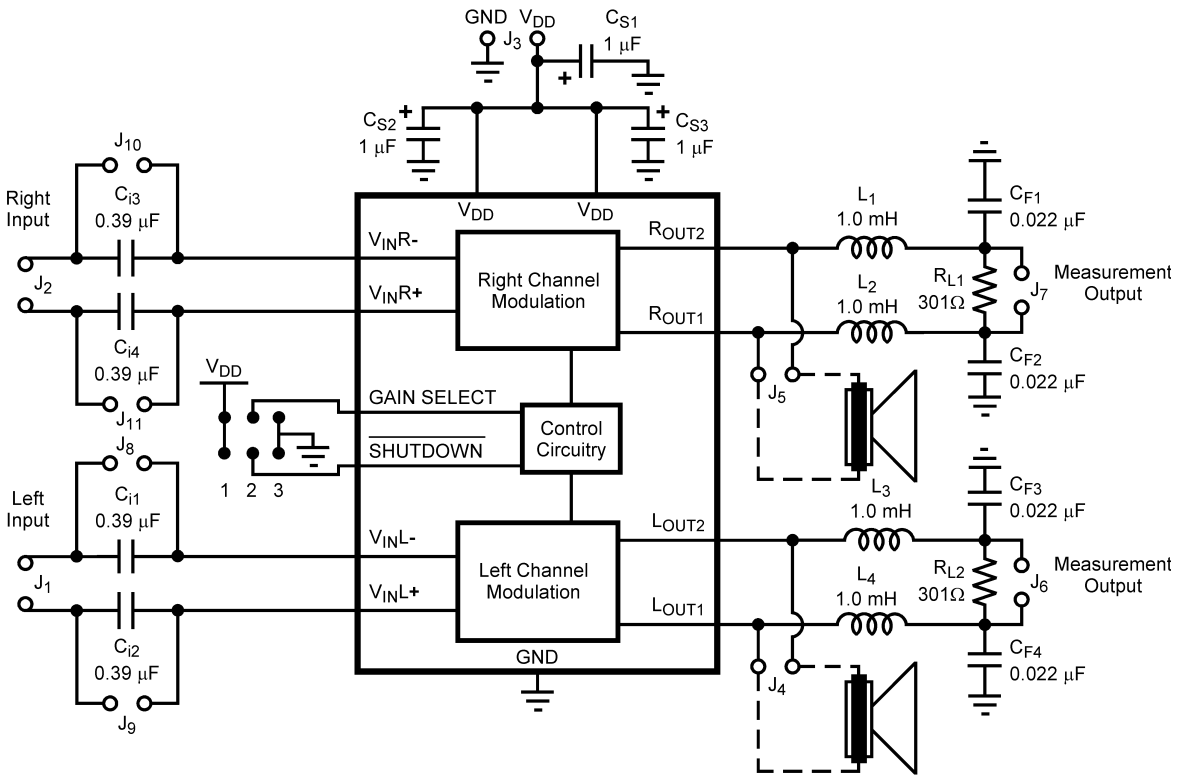

Figure 28.

In addition to the minimal parts required for the application circuit, a measurement filter is provided on the evaluation circuit board so that conventional audio measurements can be conveniently made without additional equipment. This is a balanced input, grounded differential output low pass filter with a 3dB frequency of approximately 35kHz and an on board termination resistor of 300Ω (see Figure 28). Note that the capacitive load elements are returned to ground. This is not optimal for common mode rejection purposes, but due to the independent pulse format at each output there is a significant amount of high frequency common mode component on the outputs. The grounded capacitive filter elements attenuate this component at the board to reduce the high frequency CMRR requirement placed on the analysis instruments.

Even with the grounded filter the audio signal is still differential necessitating a differential input on any analysis instrument connected to it. Most lab instruments that feature BNC connectors on their inputs are **NOT** differential responding because the ring of the BNC is usually grounded.

The commonly used Audio Precision analyzer is differential but its ability to accurately reject fast pulses of 160ns width is questionable necessitating the on board measurement filter. When the signal needs to be single-ended, use an audio signal transformer to convert the differential output to a single ended output. Depending on the audio transformer's characteristics, there may be some attenuation of the audio signal which needs to be taken into account for correct measurement of performance.

Measurements made at the output of the measurement filter suffer attenuation relative to the primary, unfiltered outputs even at audio frequencies. This is due to the resistance of the inductors interacting with the termination resistor (300Ω) and is typically about -0.35dB (4%). In other words, the voltage levels and corresponding power levels indicated through the measurement filter are slightly lower than those that actually occur at the load placed on the unfiltered outputs. This small loss in the filter for measurement gives a lower output power reading than what is really occurring on the unfiltered outputs and its load.

Copyright © 2004–2013, Texas Instruments Incorporated

The AUX-0025 Switching Amplifier Measurement Filter from Audio Precision may be used instead of the on board measurement filter. The AUX-0025 filter should be connected to the high current direct outputs on the evaluation board and in series with the measurement equipment. Attaching oscilloscope probes on the outputs of the AUX-0025 filter will display the audio waveforms. The AUX-0025 filter may also be connected to the on board filter without any adverse effects.

LM4666 NHK0014A BOARD ARTWORK

Figure 29. Composite View

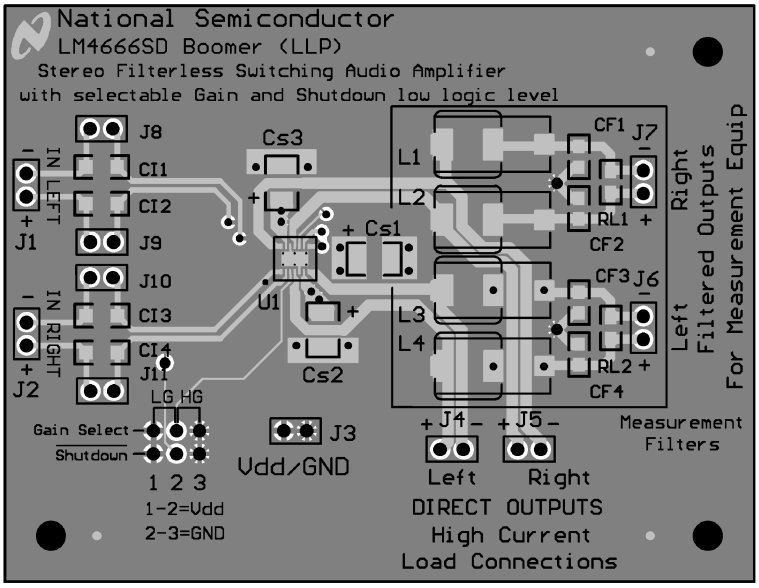

Figure 30. Silk Screen

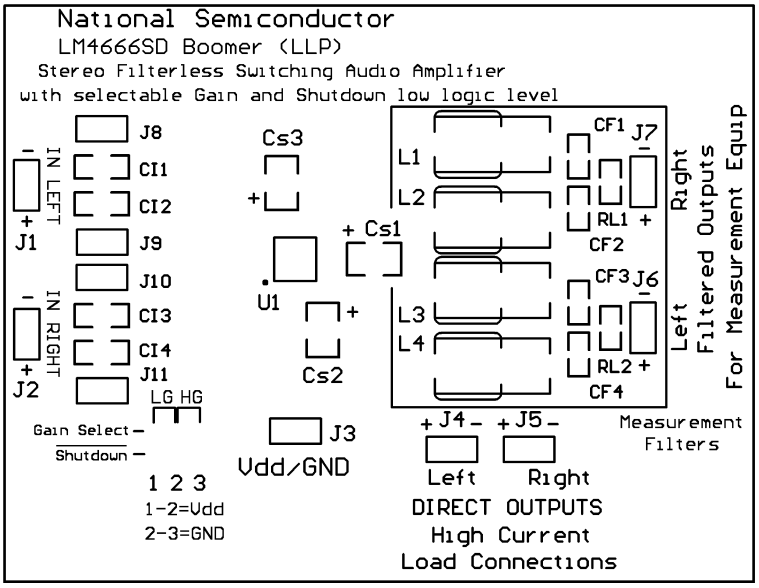

Copyright © 2004–2013, Texas Instruments Incorporated

Figure 31. Top Layer

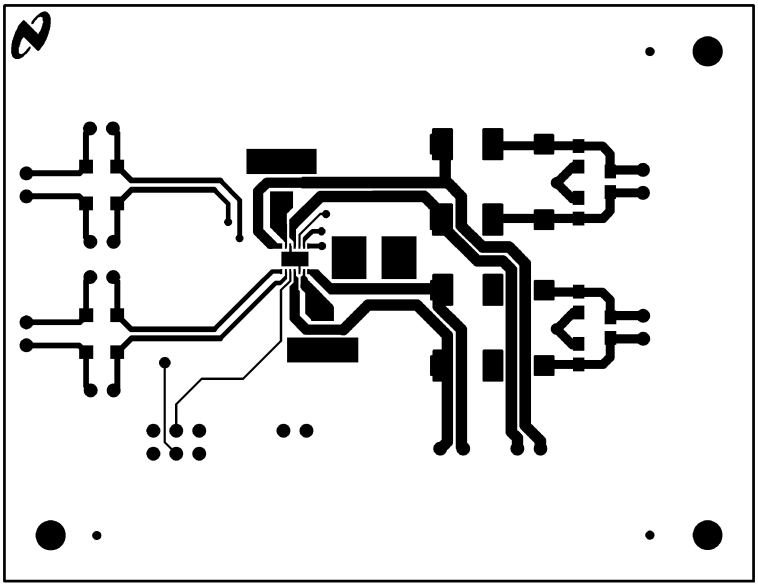

Figure 32. Internal Layer 1, GND

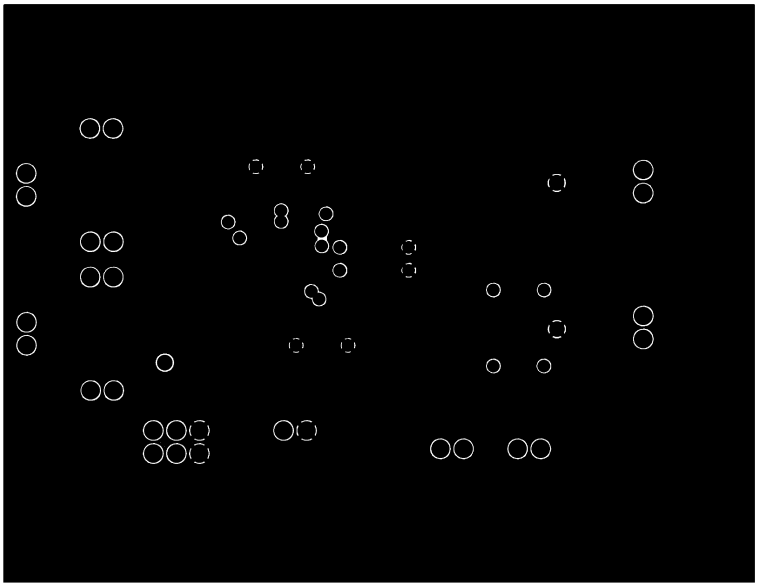

Figure 33. Internal Layer 2, V_{DD}

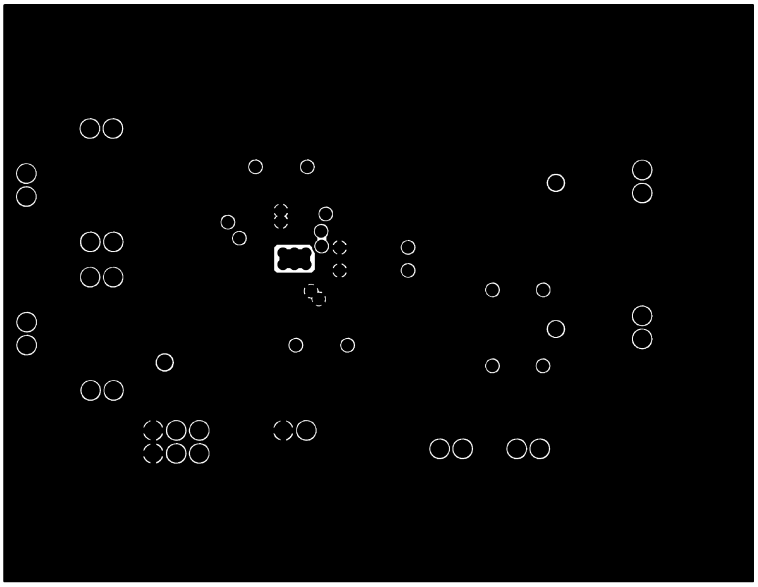

Figure 34. Bottom Layer

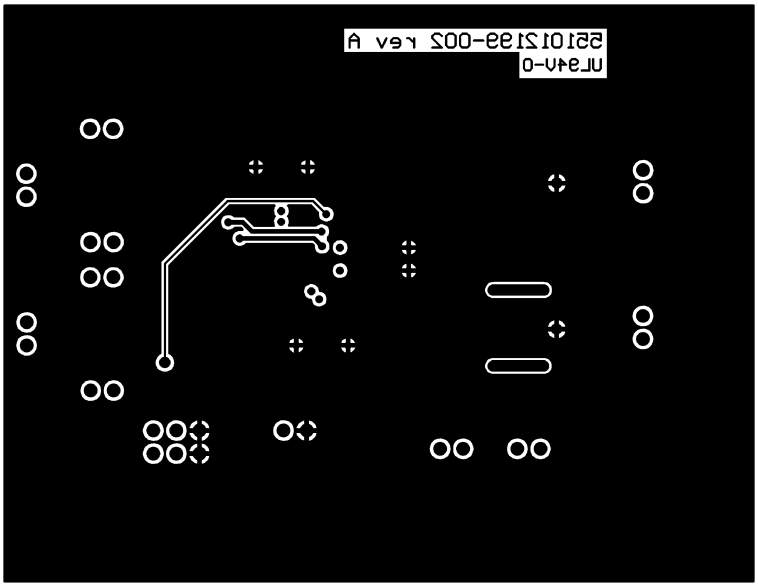

Copyright © 2004–2013, Texas Instruments Incorporated

REVISION HISTORY

Changes from Original (May 2013) to Revision A	Page
• Changed layout of National Data Sheet to TI format	16

PACKAGING INFORMATION

Orderable part number	Status (1)	Material type (2)	Package | Pins	Package qty | Carrier	RoHS (3)	Lead finish/ Ball material (4)	MSL rating/ Peak reflow (5)	Op temp (°C)	Part marking (6)
LM4666SD/NOPB	Active	Production	WSON (NHK) | 14	1000 | LARGE T&R	Yes	SN	Level-1-260C-UNLIM	-40 to 85	L4666
LM4666SD/NOPB.A	Active	Production	WSON (NHK) | 14	1000 | LARGE T&R	Yes	SN	Level-1-260C-UNLIM	-40 to 85	L4666

(1) **Status:** For more details on status, see our product life cycle.

(2) **Material type:** When designated, preproduction parts are prototypes/experimental devices, and are not yet approved or released for full production. Testing and final process, including without limitation quality assurance, reliability performance testing, and/or process qualification, may not yet be complete, and this item is subject to further changes or possible discontinuation. If available for ordering, purchases will be subject to an additional waiver at checkout, and are intended for early internal evaluation purposes only. These items are sold without warranties of any kind.

(3) **RoHS values:** Yes, No, RoHS Exempt. See the TI RoHS Statement for additional information and value definition.

(4) **Lead finish/Ball material:** Parts may have multiple material finish options. Finish options are separated by a vertical ruled line. Lead finish/Ball material values may wrap to two lines if the finish value exceeds the maximum column width.

(5) **MSL rating/Peak reflow:** The moisture sensitivity level ratings and peak solder (reflow) temperatures. In the event that a part has multiple moisture sensitivity ratings, only the lowest level per JEDEC standards is shown. Refer to the shipping label for the actual reflow temperature that will be used to mount the part to the printed circuit board.

(6) **Part marking:** There may be an additional marking, which relates to the logo, the lot trace code information, or the environmental category of the part.

Multiple part markings will be inside parentheses. Only one part marking contained in parentheses and separated by a "~" will appear on a part. If a line is indented then it is a continuation of the previous line and the two combined represent the entire part marking for that device.

Important Information and Disclaimer: The information provided on this page represents TI's knowledge and belief as of the date that it is provided. TI bases its knowledge and belief on information provided by third parties, and makes no representation or warranty as to the accuracy of such information. Efforts are underway to better integrate information from third parties. TI has taken and continues to take reasonable steps to provide representative and accurate information but may not have conducted destructive testing or chemical analysis on incoming materials and chemicals. TI and TI suppliers consider certain information to be proprietary, and thus CAS numbers and other limited information may not be available for release.

In no event shall TI's liability arising out of such information exceed the total purchase price of the TI part(s) at issue in this document sold by TI to Customer on an annual basis.

TAPE AND REEL INFORMATION

REEL DIMENSIONS

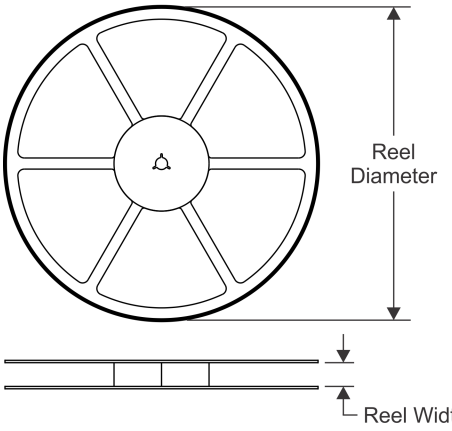

TAPE DIMENSIONS

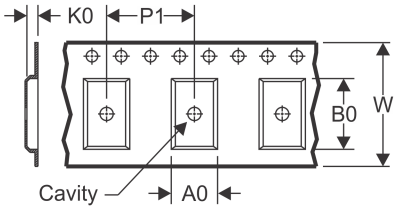

A0	Dimension designed to accommodate the component width
B0	Dimension designed to accommodate the component length
K0	Dimension designed to accommodate the component thickness
W	Overall width of the carrier tape
P1	Pitch between successive cavity centers

QUADRANT ASSIGNMENTS FOR PIN 1 ORIENTATION IN TAPE

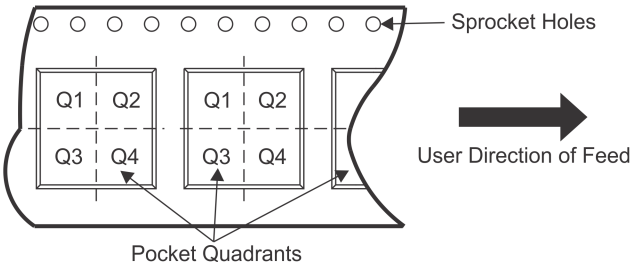

*All dimensions are nominal

Device	Package Type	Package Drawing	Pins	SPQ	Reel Diameter (mm)	Reel Width W1 (mm)	A0 (mm)	B0 (mm)	K0 (mm)	P1 (mm)	W (mm)	Pin1 Quadrant
LM4666SD/NOPB	WSON	NHK	14	1000	178.0	12.4	3.3	4.3	1.0	8.0	12.0	Q1

TAPE AND REEL BOX DIMENSIONS

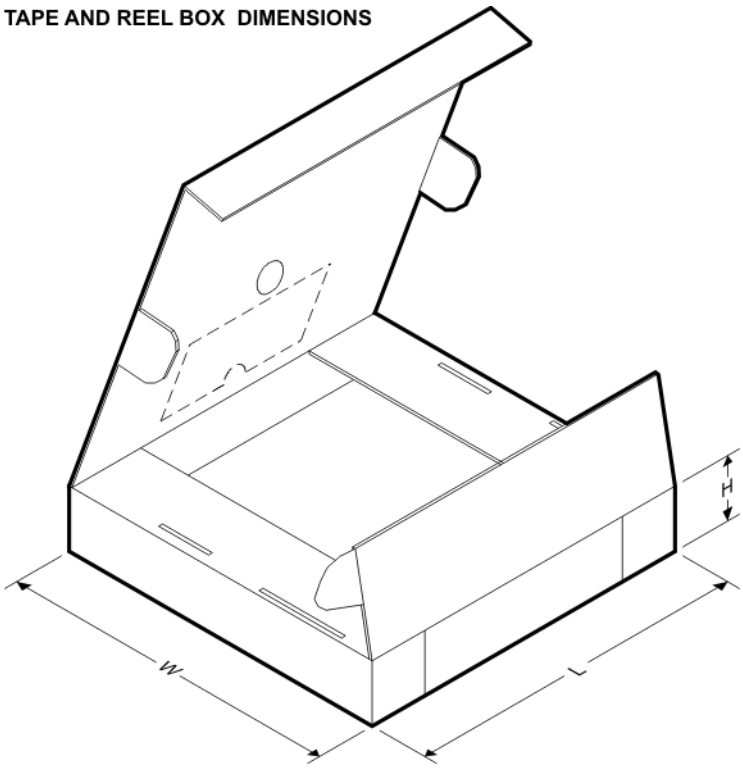

*All dimensions are nominal

Device	Package Type	Package Drawing	Pins	SPQ	Length (mm)	Width (mm)	Height (mm)
LM4666SD/NOPB	WSON	NHK	14	1000	208.0	191.0	35.0

NHK0014A

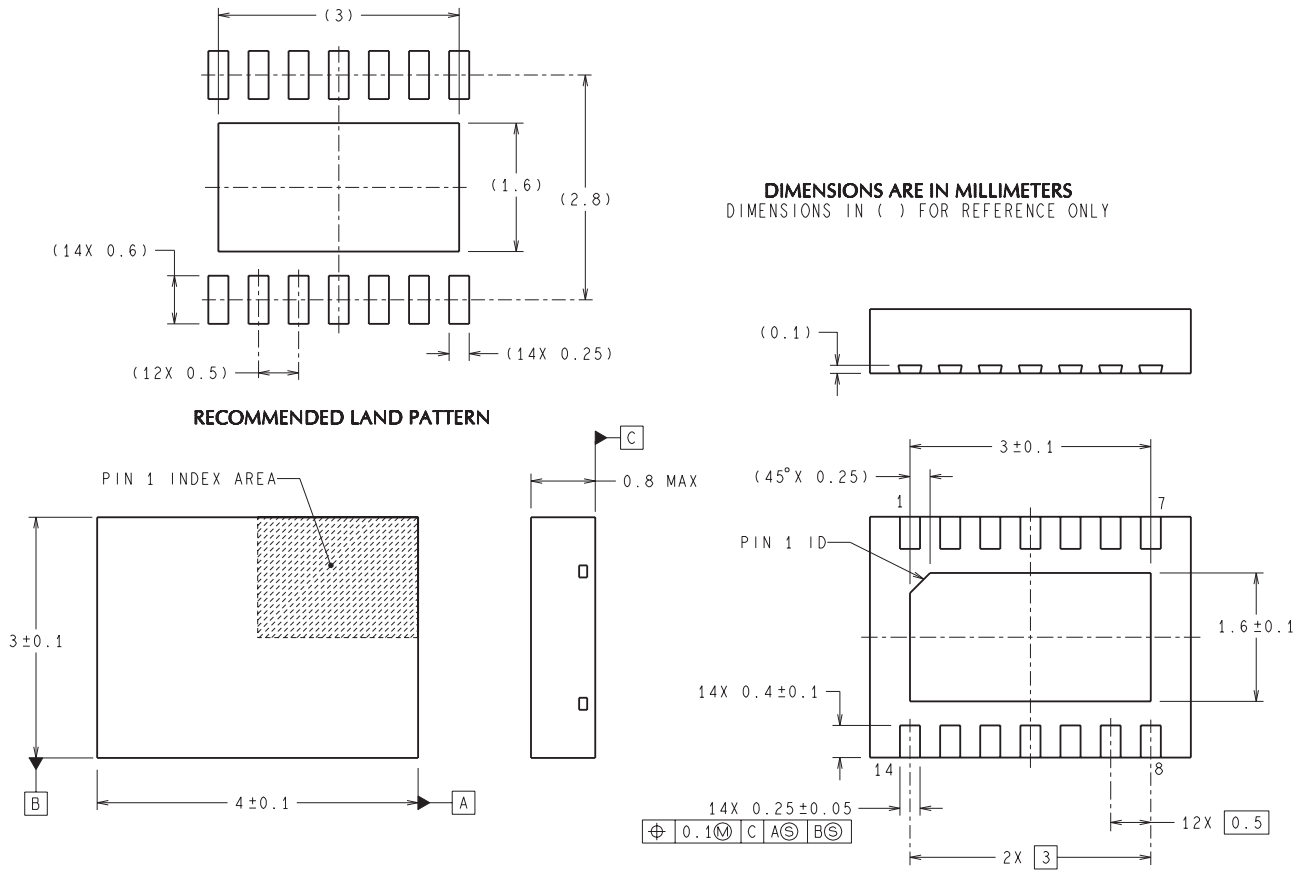

SDA14A (Rev A)

IMPORTANT NOTICE AND DISCLAIMER

TI PROVIDES TECHNICAL AND RELIABILITY DATA (INCLUDING DATA SHEETS), DESIGN RESOURCES (INCLUDING REFERENCE DESIGNS), APPLICATION OR OTHER DESIGN ADVICE, WEB TOOLS, SAFETY INFORMATION, AND OTHER RESOURCES “AS IS” AND WITH ALL FAULTS, AND DISCLAIMS ALL WARRANTIES, EXPRESS AND IMPLIED, INCLUDING WITHOUT LIMITATION ANY IMPLIED WARRANTIES OF MERCHANTABILITY, FITNESS FOR A PARTICULAR PURPOSE OR NON-INFRINGEMENT OF THIRD PARTY INTELLECTUAL PROPERTY RIGHTS.

These resources are intended for skilled developers designing with TI products. You are solely responsible for (1) selecting the appropriate TI products for your application, (2) designing, validating and testing your application, and (3) ensuring your application meets applicable standards, and any other safety, security, regulatory or other requirements.

These resources are subject to change without notice. TI grants you permission to use these resources only for development of an application that uses the TI products described in the resource. Other reproduction and display of these resources is prohibited. No license is granted to any other TI intellectual property right or to any third party intellectual property right. TI disclaims responsibility for, and you will fully indemnify TI and its representatives against, any claims, damages, costs, losses, and liabilities arising out of your use of these resources.

TI’s products are provided subject to TI’s Terms of Sale or other applicable terms available either on ti.com or provided in conjunction with such TI products. TI’s provision of these resources does not expand or otherwise alter TI’s applicable warranties or warranty disclaimers for TI products.

TI objects to and rejects any additional or different terms you may have proposed.

Mailing Address: Texas Instruments, Post Office Box 655303, Dallas, Texas 75265
Copyright © 2025, Texas Instruments Incorporated