TPS53632 3-2-1 Phase D-CAP+™ Step-Down Driverless Controller for Low-Voltage Applications with I²C Interface Control

1 Features

- Selectable Phase Count: (3, 2, or 1)
- I²C Interface for VID Control and Telemetry with Eight Device Addresses
- D-CAP+™ Control for Fast Transient Response
- Dynamic Phase Add and Drop Operation
- Switching Frequency: 300 kHz to 1 MHz
- Digital Current Monitor
- 7-Bit, DAC Output Range: 0.50 V to 1.52 V
- Optimized Efficiency at Light and Heavy Loads
- Accurate, Adjustable Voltage Positioning or Zero Slope Load-Line
- Patented AutoBalance™ Phase Balancing
- Selectable, 8-Level Current Limit
- 2.5-V to 24-V Conversion Voltage Range
- Default Boot Voltage: 1.00 V
- Small, 4-mm x 4-mm, 32-Pin, VQFN PowerPAD Package

2 Applications

- High-Current, Low-Voltage Applications
- Core Power for Microservers, Custom Microcontrollers, ASICs

3 Description

The TPS53632 device is a driverless step-down controller with serial control. Advanced features such as D-CAP+ architecture provide fast transient response, lowest output capacitance and high efficiency. The TPS53632 device supports the standard I²C Rev 3.0 interface for dynamic control of the output voltage and current monitor telemetry. It also has dynamic phase add and drop control and enters single-phase, discontinuous-current-mode operation to maximize light-load efficiency.

Other features include adjustable control of V_{CORE} slew rate and voltage positioning. The TPS51604 device driver is designed specifically for this generation of controllers. In addition, the TPS53632 device can be used along with the TI power stage devices (driver MOSFETs). The TPS53632 device is packaged in a space saving, thermally enhanced, 32-pin VQFN package and is rated to operate at a range between –10°C and 105°C.

Device Information

PART NUMBER	PACKAGE	BODY SIZE
TPS53632	VQFN	4 mm × 4 mm

Simplified Schematic

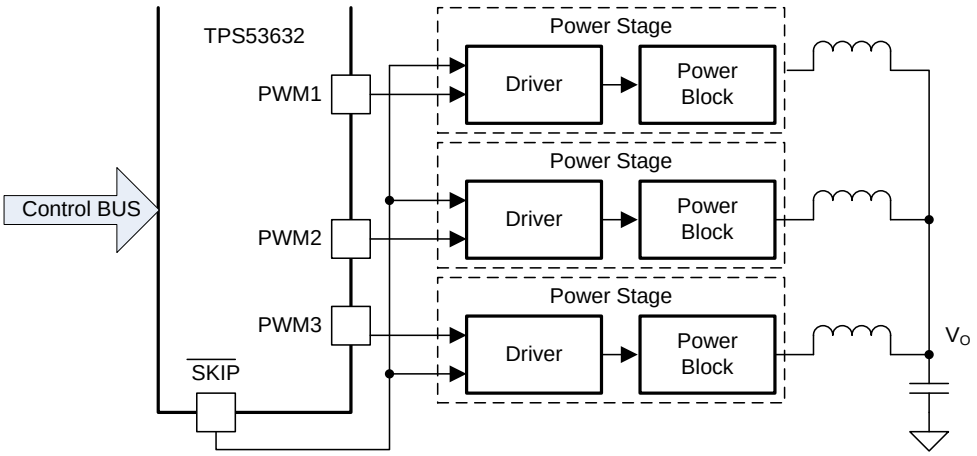

An IMPORTANT NOTICE at the end of this data sheet addresses availability, warranty, changes, use in safety-critical applications, intellectual property matters and other important disclaimers. PRODUCTION DATA.

Table of Contents

1 Features ... 1
2 Applications ... 1
3 Description ... 1
4 Revision History ... 2
5 Pin Configuration and Functions ... 3
6 Specifications ... 4
6.1 Absolute Maximum Ratings ... 4
6.2 Handling Ratings ... 4
6.3 Recommended Operating Conditions ... 5
6.4 Thermal Information ... 5
6.5 Electrical Characteristics ... 6
6.6 Timing Requirements ... 8
6.7 Switching Characteristics ... 8
6.8 Typical Characteristics (2-Phase Operation) ... 9
6.9 Typical Characteristics (3-Phase Operation) ... 10
7 Detailed Description ... 11
7.1 Overview ... 11
7.2 Functional Block Diagram ... 12
7.3 Feature Description ... 12
7.4 Device Functional Modes ... 20
7.5 Configuration and Programming ... 20
7.6 Register Maps ... 21
8 Applications and Implementation ... 23
8.1 Application Information ... 23
8.2 Typical Application ... 23
9 Power Supply Recommendations ... 31
10 Layout ... 32
10.1 Layout Guidelines ... 32
10.2 Layout Example ... 35
11 Device and Documentation Support ... 35
11.1 Trademarks ... 35
11.2 Electrostatic Discharge Caution ... 35
11.3 Glossary ... 35
12 Mechanical, Packaging, and Orderable Information ... 35

4 Revision History

NOTE: Page numbers for previous revisions may differ from page numbers in the current version.

DATE	REVISION	NOTES
September 2014	*	Initial release.

Copyright © 2014, Texas Instruments Incorporated

5 Pin Configuration and Functions

RSM (QFN) PACKAGE
32 PINS
(TOP VIEW)

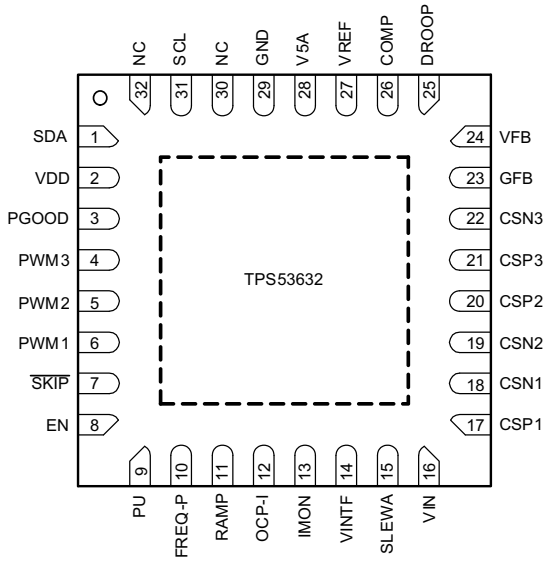

Pin Functions

PIN		I/O	DESCRIPTION
NAME	NO.		
COMP	26	I	Error amplifier summing node. Resistors between the VREF pin and the COMP pin (R_{COMP}) and between the COMP pin and the DROOP pin (R_{DROOP}) set the droop gain.
CSP1 CSP2 CSP3	17 20 21	I	Positive current sense inputs. Connect to the most positive node of current sense resistor or inductor DCR sense network. Tie CSP3, CSP2 or CSP1 (in that order) to a 3.3-V supply to disable the phase.
CSN1 CSN2 CSN3	18 19 22	I	Negative current sense inputs. Connect to the most negative node of current sense resistor or inductor DCR sense network. CSN1 has a secondary OVP comparator and includes the soft-stop, pull-down transistor.
DROOP	25	O	Error amplifier output. A resistor pair between this pin and the VREF pin and between the COMP pin and this pin sets the droop gain. $A_{DROOP} = 1 + R_{DROOP} / R_{COMP}$.
EN	8	I	Enable. 100-ns de-bounce. Regulator enters low-power mode, but retains start-up settings when brought low.
FREQ-P	10	I	A resistor between this pin and GND sets the per-phase switching frequency. Add a resistor to VREF to disable dynamic phase add and drop operation.
GFB	23	I	Voltage sense return. Tie to GND on PCB with a 10-Ω resistor to provide feedback when the microprocessor is not populated.
GND	29	–	Analog circuit reference. Tie this pin to a quiet point on the ground plane.
IMON	13	O	Analog current monitor output. $V_{IMON} = \Sigma V_{ISENSE} \times (1 + R_{IMON}/R_{OCP})$.
OCP-I	12	I/O	Voltage divider to IMON. Resistor ratio sets the IMON gain (see IMON pin). A resistor between this pin and GND (R_{OCP}) selects 1 of 8 OCP levels (per phase, latched at start-up).
PU	9	I	Pull-up to VREF through 10-kΩ resistor.
PGOOD	3	O	Power good output. Open-drain.
PWM1 PWM2 PWM3	4 5 6	O	PWM controls for the external driver; 5-V logic level. Controller forces signal to the tri-state level when needed.
NC	30 32	–	No connect.

Pin Functions (continued)

PIN		I/O	DESCRIPTION
NAME	NO.		
RAMP	11	I	Voltage divider to VREF. A resistor to GND sets the ramp setting voltage. The RAMP setting can be used to override the factory ramp setting.
SCL	31	I	Serial digital clock line.
SDA	1	I/O	Serial digital I/O line.
$\overline{\text{SKIP}}$	7	O	When high, the driver enters FCCM mode; otherwise, the driver is in DCM mode. Driving the tri-state level on this pin puts the drivers into a low power sleep mode.
SLEWA	15	I	The voltage sets the 3 LSBs of the I^2C address. The resistance to GND selects 1 of 8 slew rates. The start-up slew rate (EN transitions high) is SLEWRATE/2. The ADDRESS and SLEWRATE values are latched at start-up.
VINTF	14	I	Input voltage to interface logic. Voltage level can be between 1.62 V and 3.5 V.
V5A	28	I	5-V power input for analog circuits; connect through resistor to 5-V plane and bypass to GND with ceramic capacitor with a value of at least 1 µF.
VIN	16	I	10-kΩ resistor to the VIN pin provides input voltage information to the on-time circuits for both converters.
VDD	2	I	3.3-V digital power input. Bypass this pin to GND with a capacitor with a value of at least 1 µF.
VFB	24	I	Voltage sense line. Tie directly to V_{OUT} sense point of processor. Tie to V_{OUT} on PCB with a 10-Ω resistor to provide feedback when the microprocessor is not populated. The resistance between VFB and GFB is > 1 MΩ
VREF	27	O	1.7-V, 500-µA reference. Bypass to GND with a 0.22-µF ceramic capacitor.
PAD	GND	–	Thermal pad Tie to the ground plane with multiple vias.

6 Specifications

6.1 Absolute Maximum Ratings

over operating free-air temperature range (unless otherwise noted) (1)

		MIN	MAX	UNIT
Input voltage	PWM3, PWM2, PWM1, SKIP, V5A	–0.3	6.0	V
	VIN	–0.3	30.0	
	COMP, CSP1, CSP2, CSP3, CSN1, CSN2, CSN3, DROOP, EN, FREQ-P, IMON, OCP-I, O-USR, RAMP, SCL, SDA, SLEWA, VDD, VFB, VINTF, VREF	–0.3	3.6	
	GFB	–0.2	0.2	
Output voltage	PGOOD	–0.3	3.6	V
Operating junction temperature, T_J		–40	150	°C

(1) Stresses beyond those listed under *Absolute Maximum Ratings* may cause permanent damage to the device. These are stress ratings only, which do not imply functional operation of the device at these or any other conditions beyond those indicated under *Recommended Operating Conditions*. Exposure to absolute-maximum-rated conditions for extended periods may affect device reliability.

6.2 Handling Ratings

		MIN	MAX	UNIT
T_{stg}	Storage temperature	–55	150	°C
$V_{(ESD)}$ (1)	Human body model (HBM) ESD stress voltage (1)	–2	2	kV
	Charged device model (CDM) ESD stress voltage (2)	–750	750	V

(1) JEDEC document JEP155 states that 500-V HBM allows safe manufacturing with a standard ESD control process.
(2) JEDEC document JEP157 states that 250-V CDM allows safe manufacturing with a standard ESD control process.

Copyright © 2014, Texas Instruments Incorporated

6.3 Recommended Operating Conditions

over operating free-air temperature range (unless otherwise noted)

			MIN	MAX	UNIT
V_I	Input voltage	CSN1, CSN2, CSN3, CSP1, CSP2, CSP3, IMON, , OCP-I, O-USR, RAMP, SCL, SDA, VDD, VFB, VINTF, VREF	–0.1	3.5	V
		VIN	–0.1	28	
		COMP, DROOP, EN, FREQ-P, PWM3, PWM2, PWM1, SKIP, SLEWA, V5A	–0.1	5.5	
		GFB	–0.1	0.1	
V_O	Output voltage	PGOOD	–0.1	3.5	V
T_A	Operating ambient temperature		–10	105	°C

6.4 Thermal Information

THERMAL METRIC(1)		TPS53632 RSM (VQFN) 32 PINS	UNITS
θ_{JA}	Junction-to-ambient thermal resistance(2)	37.2	°C/W
θ_{JCtop}	Junction-to-case (top) thermal resistance(3)	31.9	
θ_{JB}	Junction-to-board thermal resistance(4)	8.1	
ψ_{JT}	Junction-to-top characterization parameter(5)	0.4	
ψ_{JB}	Junction-to-board characterization parameter(6)	7.9	
θ_{JCbot}	Junction-to-case (bottom) thermal resistance(7)	2.2	

(1) For more information about traditional and new thermal metrics, see the *IC Package Thermal Metrics* application report, SPRA953.
(2) The junction-to-ambient thermal resistance under natural convection is obtained in a simulation on a JEDEC-standard, high-K board, as specified in JESD51-7, in an environment described in JESD51-2a.
(3) The junction-to-case (top) thermal resistance is obtained by simulating a cold plate test on the package top. No specific JEDEC-standard test exists, but a close description can be found in the ANSI SEMI standard G30-88.
(4) The junction-to-board thermal resistance is obtained by simulating in an environment with a ring cold plate fixture to control the PCB temperature, as described in JESD51-8.
(5) The junction-to-top characterization parameter, ψ_{JT}, estimates the junction temperature of a device in a real system and is extracted from the simulation data for obtaining θ_{JA}, using a procedure described in JESD51-2a (sections 6 and 7).
(6) The junction-to-board characterization parameter, ψ_{JB}, estimates the junction temperature of a device in a real system and is extracted from the simulation data for obtaining θ_{JA} , using a procedure described in JESD51-2a (sections 6 and 7).
(7) The junction-to-case (bottom) thermal resistance is obtained by simulating a cold plate test on the exposed (power) pad. No specific JEDEC standard test exists, but a close description can be found in the ANSI SEMI standard G30-88.

Copyright © 2014, Texas Instruments Incorporated

6.5 Electrical Characteristics

over recommended free-air temperature range, 4.5 V ≤ V_{V5A} ≤ 5.5 V, 3.0 V ≤ V_{VDD} ≤ 3.6 V, V_{GFB} = GND, V_{VFB} = V_{CORE} (unless otherwise noted).

PARAMETER		CONDITIONS	MIN	TYP	MAX	UNIT
POWER SUPPLY: CURRENTS, UVLO AND POWER-ON-RESET						
I_{V5-3P}	V5A supply current	3-phase operation, V_{DAC} < V_{VFB} < (V_{DAC} + 100 mV), EN = 'HI'		3.6	6.0	mA
I_{VDD-3P}	VDD supply current	3-phase operation, V_{DAC} < V_{VFB} < (V_{DAC} + 100 mV), EN = 'HI', digital buses idle		0.2	0.8	
I_{V5-1P}	V5A supply current	1-phase operation, V_{DAC} < V_{VFB} < (V_{DAC} + 100 mV) , EN = 'HI'		3.5	6.0	
I_{VDD-1P}	VDD supply current	1-phase operation, V_{DAC} < V_{VFB} < (V_{DAC} + 100 mV), EN = 'HI', digital buses idle		0.2	0.8	
I_{V5STBY}	V5A standby current	EN = 'LO'		125	200	µA
$I_{VDDSTBY}$	VDD standby current	EN = 'LO'		23	40	
$I_{VDD-1P8}$	VINTF supply current	All conditions, digital buses idle		1.7	5.0	
V_{UVLOH}	V5A UVLO 'OK' threshold	V_{VFB} < 200 mV, Ramp up, V_{VDD} > 3 V, EN = 'HI', switching begins.	4.2	4.4	4.52	V
V_{UVLOL}	V5A UVLO fault threshold	Ramp down, EN = 'HI', V_{VDD} > 3 V, V_{VFB} = 100 mV, restart if 5-V falls below V_{POR} then rises > V_{UVLOH}, or EN is toggled w/ V_{V5A} > V_{UVLOH}	4.00	4.2	4.35	
V_{POR}	V5A fault latch reset threshold	Ramp down, EN = 'HI', V_{VDD} > 3 V. Can restart if 5-V rises to V_{UVLOH} and no other faults present.	1.2	1.9	2.5	
V_{3UVLOH}	VDD UVLO 'OK' threshold	V_{VFB} < 200 mV. Ramp up, V_{V5A} > 4.5 V, EN = 'HI', Switching begins.	2.5	2.8	3.0	
V_{3UVLOL}	Fault threshold	Ramp down, EN = 'HI', V5A > 4.5V, VFB = 100 mV, restart if 5-V dips below V_{POR} then rises > V_{UVLOH} or EN is toggled with 5 V > V_{UVLOH}	2.4	2.6	2.8	
V_{POR}	VDD fault latch	Ramp down, EN = 'HI', V_{V5A} > 4.5 V, can restart if 5-V supply rises to V_{UVLOH} and no other faults present.	1.2	1.9	2.5	
$V_{INTFUVLOH}$	VINTF UVLO OK	Ramp up, EN = 'HI', V_{V5A} > 4.5 V, V_{VFB} = 100 mV	1.4	1.5	1.6	
$V_{INTFUVLOL}$	VINTF UVLO falling	Ramp down, EN = 'HI', V_{V5A} > 4.5 V, V_{VFB} = 100 mV	1.3	1.4	1.5	
REFERENCES: DAC, VREF, VFB DISCHARGE						
V_{VIDSTP}	VID step size	Change VID0 HI to LO to HI		10		mV
V_{DAC1}	VFB tolerance	No load active, 1.36 V ≤ V_{VFB} ≤ 1.52 V, I_{OUT} = 0 A	–9		9	
V_{DAC2}	VFB tolerance	No load medium, 1.0 V ≤ V_{VFB} ≤ 1.35 V, I_{OUT} = 0 A	–8		8	
		No load medium, 0.5 V ≤ V_{VFB} ≤ 0.99 V, I_{OUT} = 0 A	-7		7	
V_{VREF}	VREF output	VREF output 4.5 V ≤ V_{V5A} ≤ 5.5 V, I_{VREF} = 0 A	1.66	1.700	1.74	V
$V_{VREFSRC}$	VREF output source	0 A ≤ I_{REF} ≤ 500 µA, HP-2	–4	-3		mV
$V_{VREFSNK}$	VREF output sink	–500 A ≤ I_{REF} ≤ 0 A, HP-2		3	4	
V_{VBOOT}	Internal VFB initial boot voltage	Initial DAC boot voltage	0.99	1.00	1.01	V
RAMP SETTINGS						
V_{RAMP}	Compensation ramp	R_{RAMP} = 30 kΩ		60		mV
		R_{RAMP} = 56 kΩ		120		
		R_{RAMP} = 100 kΩ		160		
		R_{RAMP} ≥ 150 kΩ		40		
VOLTAGE SENSE: VFB AND GFB						
R_{VFB}	VFB/GFB Input resistance	Not in fault, disable or UVLO, V_{VFB} = V_{DAC} = 1.5 V, V_{GFB} = 0 V, measure from VFB to GFB	1			MΩ
V_{DELGND}	GFB Differential	GND to GFB		±100		mV
CURRENT MONITOR						
VAL_{ADC}	IMON ADC output	∑ΔCS = 0 mV, A_{IMON} = 3.867		00h		
		∑ΔCS = 1.5 mV, A_{IMON} = 3.867		19h		
		∑ΔCS = 7.5 mV, A_{IMON} = 3.867		80h		
		∑ΔCS = 15 mV, A_{IMON} = 3.867		FFh		
LR_{IMON}	IMON linear range	Each phase, CSPx – CSNx	50			mV

Copyright © 2014, Texas Instruments Incorporated

Electrical Characteristics (continued)

over recommended free-air temperature range, 4.5 V ≤ V_{V5A} ≤ 5.5 V, 3.0 V ≤ V_{VDD} ≤ 3.6 V, V_{GFB} = GND, V_{VFB} = V_{CORE} (unless otherwise noted).

PARAMETER		CONDITIONS	MIN	TYP	MAX	UNIT
CURRENT SENSE: OVER CURRENT PROTECTION, PHASE ADD AND DROP, AND PHASE BALANCE						
V_{OCPP}	OCP voltage (valley current limit)	R_{OCP-I} = 20 kΩ	3.7	7.6	11.4	mV
		R_{OCP-I} = 24 kΩ	6.6	10.5	14.1	
		R_{OCP-I} = 30 kΩ	10.6	14.5	18.0	
		R_{OCP-I} = 39 kΩ	15.4	19.5	23.0	
		R_{OCP-I} = 56 kΩ	21.3	25.4	29.0	
		R_{OCP-I} = 75 kΩ	28.4	32.5	36.2	
		R_{OCP-I} = 100 kΩ	36.3	40.5	44.0	
		R_{OCP-I} = 150 kΩ	45.0	49.3	53.0	
I_{AD23}	Phase add	Valley current, % of OCP value, mode changes from 2-phase CCM to 3-phase CCM		25%		
I_{AD12}	Phase add	Valley current, % of OCP value, mode changes from 1-phase DCM to 2-phase CCM		10%		
I_{AD32}	Phase drop	Valley current, % of OCP value, mode changes from 3-phase CCM to 2-phase CCM		15%		
I_{AD21}	Phase drop	Valley current, % of OCP value, mode changes from 2-phase CCM to 1-phase DCM		7%		
I_{CS}	CS pin input bias current	CSPx and CSNx	–500	0.2	500	nA
A_{V-EA}	Error amplifier total voltage gain(1)	VFB to DROOP	80			dB
I_{EA_SR}	Error amplifier source current	I_{DROOP}, V_{VFB} = V_{DAC} + 50 mV, R_{COMP} = 1 kΩ		1		mA
I_{EA_SK}	Error amplifier sink current	I_{DROOP}, V_{VFB} = V_{DAC} – 50mV, R_{COMP} = 1 kΩ		–1		
A_{CSINT}	Internal current sense gain	Gain from CSPx – CSNx to PWM comparator, $R_{\overline{SKIP}}$ = Open	5.8	6.0	6.2	V/V
R_{SFTSTP}	Soft-stop transistor resistance	Connected to CSN1		100	200	Ω
V_{DP_OFF}	Voltage to disable dynamic phase add/drop	Voltage at FREQ-P at start-up	0.70			V
V_{DP_ON}	Voltage to enable dynamic phase add/drop	Voltage at FREQ-P at start-up			0.40	
V_{DP_HYS}	Hysteresis voltage of phase add/drop circuit	Voltage at FREQ-P at start-up		80		mV
R_{VIN}	VIN resistance	EN = HI		350	600	kΩ
		EN = LOW or STBY	10			MΩ
PROTECTION: OVP, UVP, PGOOD AND THERMAL SHUTDOWN						
V_{OVPH}	Fixed OVP voltage	V_{CSN1} > V_{OVPH} for 1 µs	1.60	1.70	1.80	V
V_{PGDH}	PGOOD high threshold	Measured at the VFB pin w/r/t VID code, device latches OFF	190		245	mV
V_{PGDL}	PGOOD low threshold	Measured at the VFB pin w/r/t VID code, device latches OFF	-348		-280	
PWM AND $\overline{SKIP}$ OUTPUTS: I/O VOLTAGE AND CURRENT						
V_{P-S_L}	PWMx/$\overline{SKIP}$ - Low	PWM_{ILOAD} = ± 1 mA, $SKIP_{ILOAD}$ = ± 100 µA		0.15	0.3	V
V_{P-S_H}	PWMx/$\overline{SKIP}$ - High	PWM_{ILOAD} = ± 1 mA, $SKIP_{ILOAD}$ = ± 100 µA	4.2			
$V_{PW-SKLK}$	PWMx tri-state	PWM_{ILOAD} = ± 100 µA	1.6	1.7	1.8	
LOGIC INTERFACE: VOLTAGE AND CURRENT						
R_{VRTTL}	Pull-down resistance	V_{SDA} = 0.31	4		15	Ω
R_{VRPG}		V_{PGOOD}= 0.31		36	50	
I_{VRTTLK}	Logic leakage current	V_{SCL}= 1.8 V, V_{SDA} = 1.8 V, V_{PGOOD} = 3.3 V	-2	0.2	2	µA
V_{IL}	Low-level Input voltage	SCL, SDA; V_{VINTF} = 1.8 V			0.6	V
V_{IH}	High-level Input voltage		1.2			
I_{ENH}	I/O leakage, EN	Leakage current , V_{EN} = 1.8 V		24	40	µA

(1) Specified by design. Not propduction tested.

6.6 Timing Requirements

The TPS53632 requires the ENABLE signal on Pin 8 to go from low to high only after the V5A (5V), the VDD (3.3V) and the VIN rails have gone high.

6.7 Switching Characteristics

over operating free-air temperature range (unless otherwise noted)

PARAMETER		TEST CONDITIONS	MIN	TYP	MAX	UNIT
$t_{OFF(min)}$	Controller minimum OFF time	Fixed value	20			ns
$t_{ON(min)}$	Controller minimum ON time	R_{CF} = 150 kΩ, V_{VIN} = 20 V, V_{VFB} = 0 V	20			ns
TIMERS: SLEW RATE, ADDR, SLEEP EXIT, ON TIME AND I/O TIMING						
$t_{START-CB}$	Cold boot time (1)	V_{BOOT} > 0V , EN = high, C_{REF} = 0.33 µF			1.2	ms
t_{STBY-E}	Standby exit time (2)	V_{VID} = 1.28 V, R_{SLEW} = 39 kΩ			250	µs
SL_{SET}	Slew rate setting for VID change	R_{SLEW} = 20 kΩ	6			mV/µs
		R_{SLEW} = 24 kΩ	12			
		R_{SLEW} = 30 kΩ	18			
		R_{SLEW} = 39 kΩ	24			
		R_{SLEW} = 56 kΩ	30			
SL_{START} (3)	Slew rate setting for start-up	EN goes high, R_{SLEW} = 39 kΩ	12			mV/µs
ADDR	Address setting 3 LSB of I^2C address	V_{SLEWA} ≤ 0.30 V (Addr = 100 0xxx)		000b		
		0.75 V ≤ V_{SLEWA} ≤ 0.85 V		011b		
		1.15 V ≤ V_{SLEWA} ≤ 1.25 V		101b		
$t_{PGDDGLTO}$	PGOOD deglitch time (over) (4)			1		µs
$t_{PGDDGLTU}$	PGOOD deglitch time (under) (5)			31		µs
t_{ON}	On time	R_{CF} = 20 kΩ		295		ns
		R_{CF} = 24 kΩ, V_{VIN} = 12 V, V_{VFB} = 1 V (400 kHz)		230		
		R_{CF} = 39 kΩ, V_{VIN} = 12 V, V_{VFB} = 1 V (600 kHz)		164		
		R_{CF} = 75 kΩ, V_{VIN} = 12 V, V_{VFB} = 1 V (800 kHz)		140		
		R_{CF} = 150 kΩ, V_{VIN} = 12 V, V_{VFB} = 1 V (1 MHz)		128		
PWM AND $\overline{SKIP}$ OUTPUTS						
t_{P-S_H-L} (3)	PWMx/$\overline{SKIP}$ H-L transition time	10% to 90%, both edges		7	20	ns
t_{P-S_TRI} (3)	PWMx tri-state transition	10% or 90% to tri-state level, both edges		5	20	ns
PROTECTION: OVP, UVP, PGOOD AND THERMAL SHUTDOWN						
t_{PG2}	PGOOD low after enable goes low	Low state time after EN goes low.	225	250	275	µs

(1) Cold boot time is defined as the time from UVLO detection to V_{OUT} ramp.
(2) Standby exit time is defined as the time from EN assertion until PGOOD goes high
(3) Specified by design. Not production tested.
(4) PGOOD deglitch time (over) is defined as the time from when the VFB pin rises above the 250-mV V_{DAC} boundary to when the PGOOD pin goes low.
(5) PGOOD deglitch time (under) is defined as the time from when the VFB pin falls below the –300-mV V_{DAC} boundary to when the PGOOD pin goes low.

Copyright © 2014, Texas Instruments Incorporated

6.8 Typical Characteristics (2-Phase Operation)

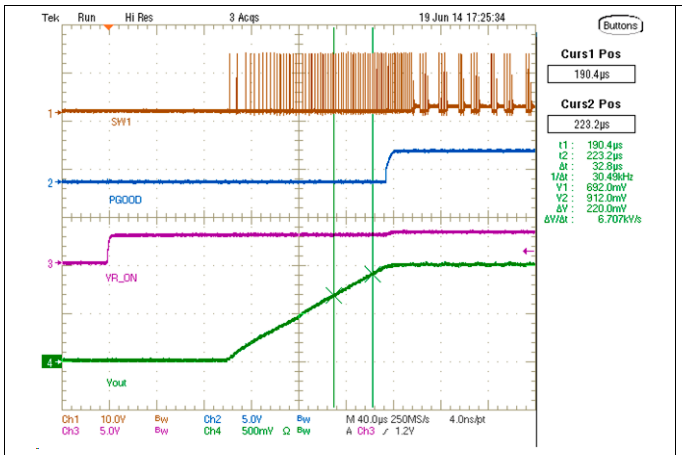

V_{IN} = 12 V V_{OUT} = 1 V Load = 1 A

Figure 1. Startup

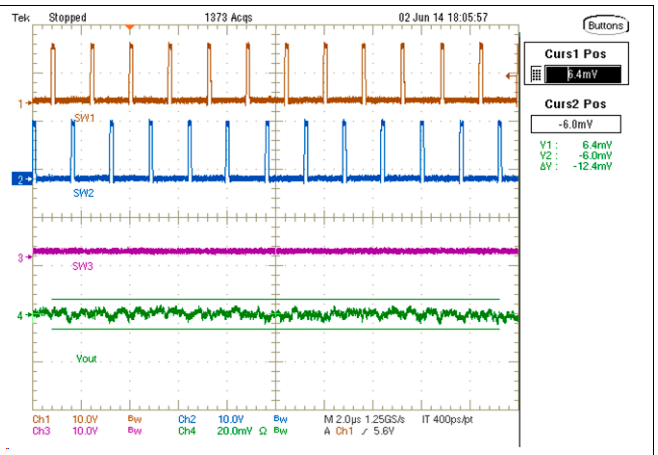

V_{IN} = 12 V V_{OUT} = 1 V Load = 10 A

Figure 2. Switching Waveform

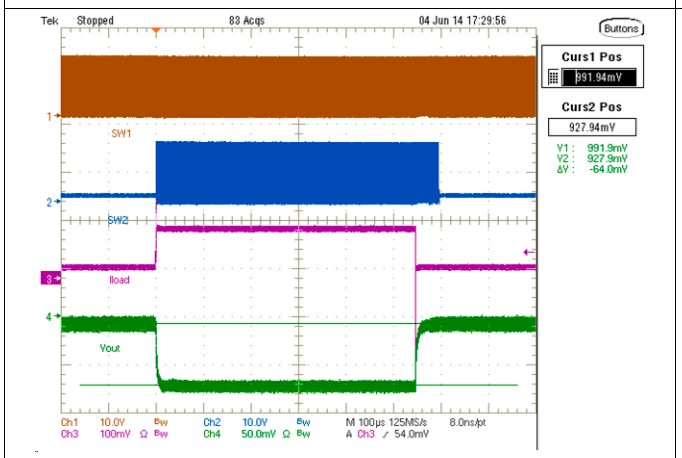

V_{IN} = 12 V V_{OUT} = 1 V Load = 4 A to 20 A

Figure 3. Load Transient

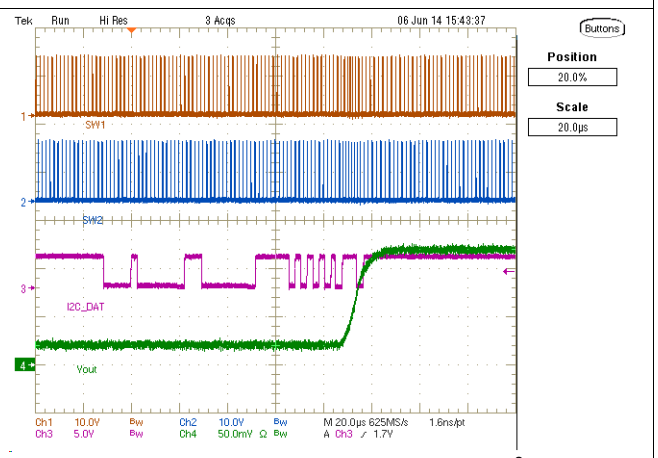

Δ V_{OUT}, 1.0 V to 1.1 V I^2C command

Figure 4. Output Voltage Change

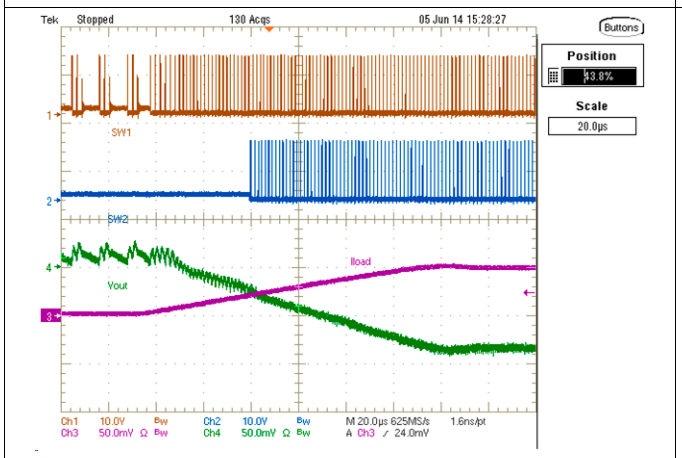

V_{IN} = 12 V V_{OUT} = 1 V Load = 1 A to 25 A

Figure 5. Auto Phase Add

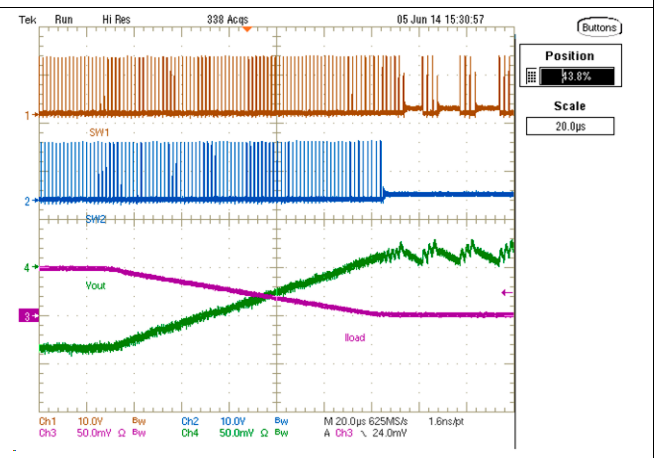

V_{IN} = 12 V V_{OUT} = 1 V Load = 25 A to 1 A

Figure 6. Auto Phase Drop

6.9 Typical Characteristics (3-Phase Operation)

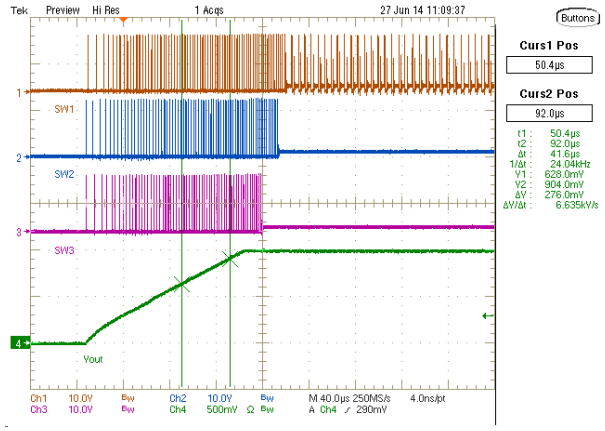

V_{IN} = 12 V V_{OUT} = 1 V Load = 1 A

Figure 7. Startup

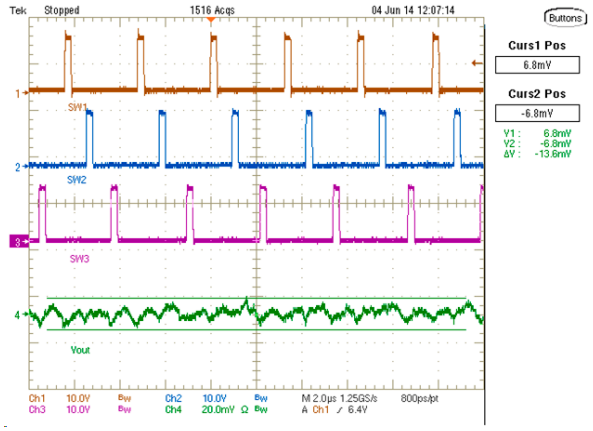

V_{IN} = 12 V V_{OUT} = 1 V Load = 30 A

Figure 8. Switching Waveform

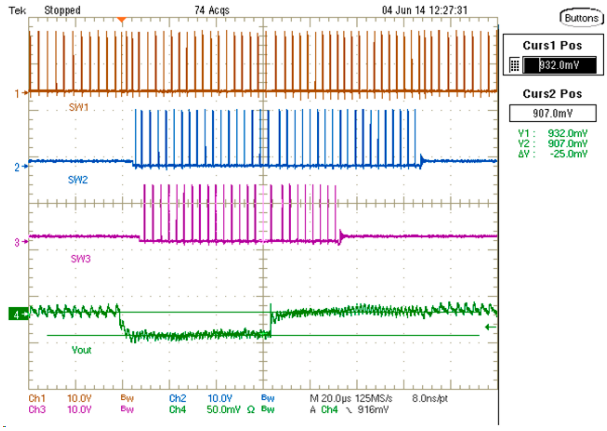

V_{IN} = 12 V V_{OUT} = 1 V Load = 9 A to 35 A

Figure 9. Load Transient

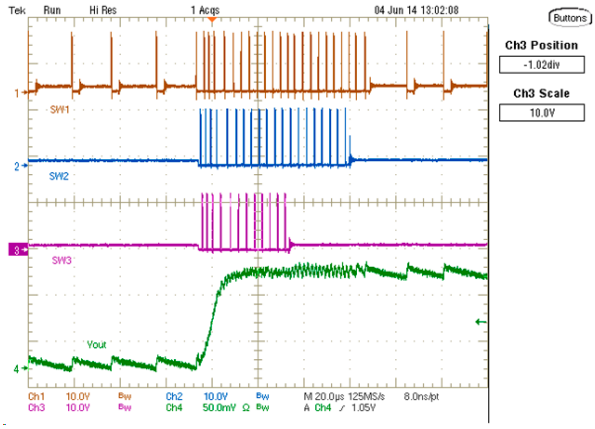

Δ V_{OUT}, 1.0 V to 1.1 V I^2C command

Figure 10. Output Voltage Change

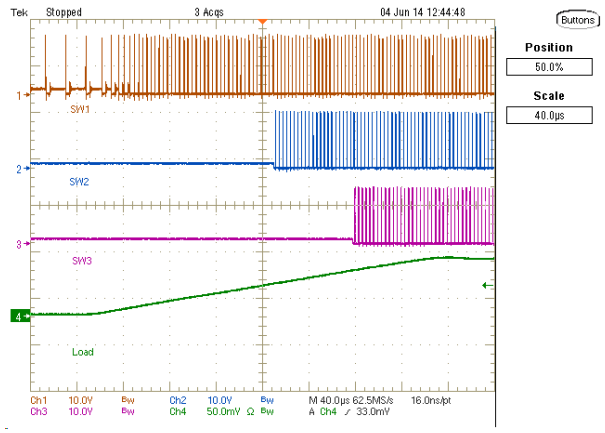

V_{IN} = 12 V V_{OUT} = 1 V Load = 1 A to 31 A

Figure 11. Auto Phase Add

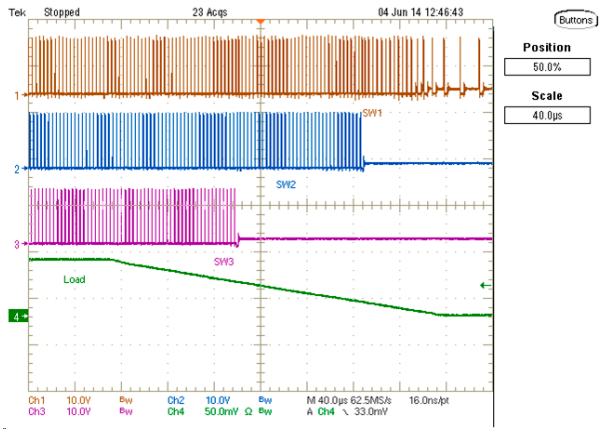

V_{IN} = 12 V V_{OUT} = 1 V Load = 31 A to 1 A

Figure 12. Auto Phase Drop

Copyright © 2014, Texas Instruments Incorporated

7 Detailed Description

7.1 Overview

The TPS53632 device is a DCAP+ mode adaptive on-time controller. The DAC outputs a reference in accordance with the 8-bit VID code as defined in Table 2. This DAC sets the output voltage.

In adaptive on-time converters, the controller varies the on-time as a function of input and output voltage to maintain a nearly constant frequency during steady-state conditions. With conventional voltage-mode constant on-time converters, each cycle begins when the output voltage crosses to a fixed reference level. However, in the TPS53632 device, the cycle begins when the current feedback reaches an error voltage level which corresponds to the amplified difference between the DAC voltage and the feedback output voltage. In the case of two-phase or three-phase operation, the device sums the current feedback from all the phases at the output of the internal current-sense amplifiers.

This approach has two advantages:

- The amplifier DC gain sets an accurate linear load-line slope, which is required for CPU core applications.
- The device filters the error voltage input to the PWM comparator to improve the noise performance.

In addition, a value representing the difference between the DAC-to-output voltage and the current feedback, goes through an integrator to give an approximately linear load-line slope even at light loads where the inductor current is in discontinuous conduction mode (DCM).

During a steady-state condition, the phases of the TPS53632 switch 180° phase-displacement for two-phase mode and 120° phase-displacement for three-phase mode. The phase displacement is maintained both by the architecture (which does not allow the high-side gate drive outputs of more than one phase to be ON in any condition except transients) and the current ripple (which forces the pulses to be spaced equally). The controller forces current-sharing by adjusting the ON-time of each phase. Current balancing requires no user intervention, compensation, or extra components.

Copyright © 2014, Texas Instruments Incorporated

7.2 Functional Block Diagram

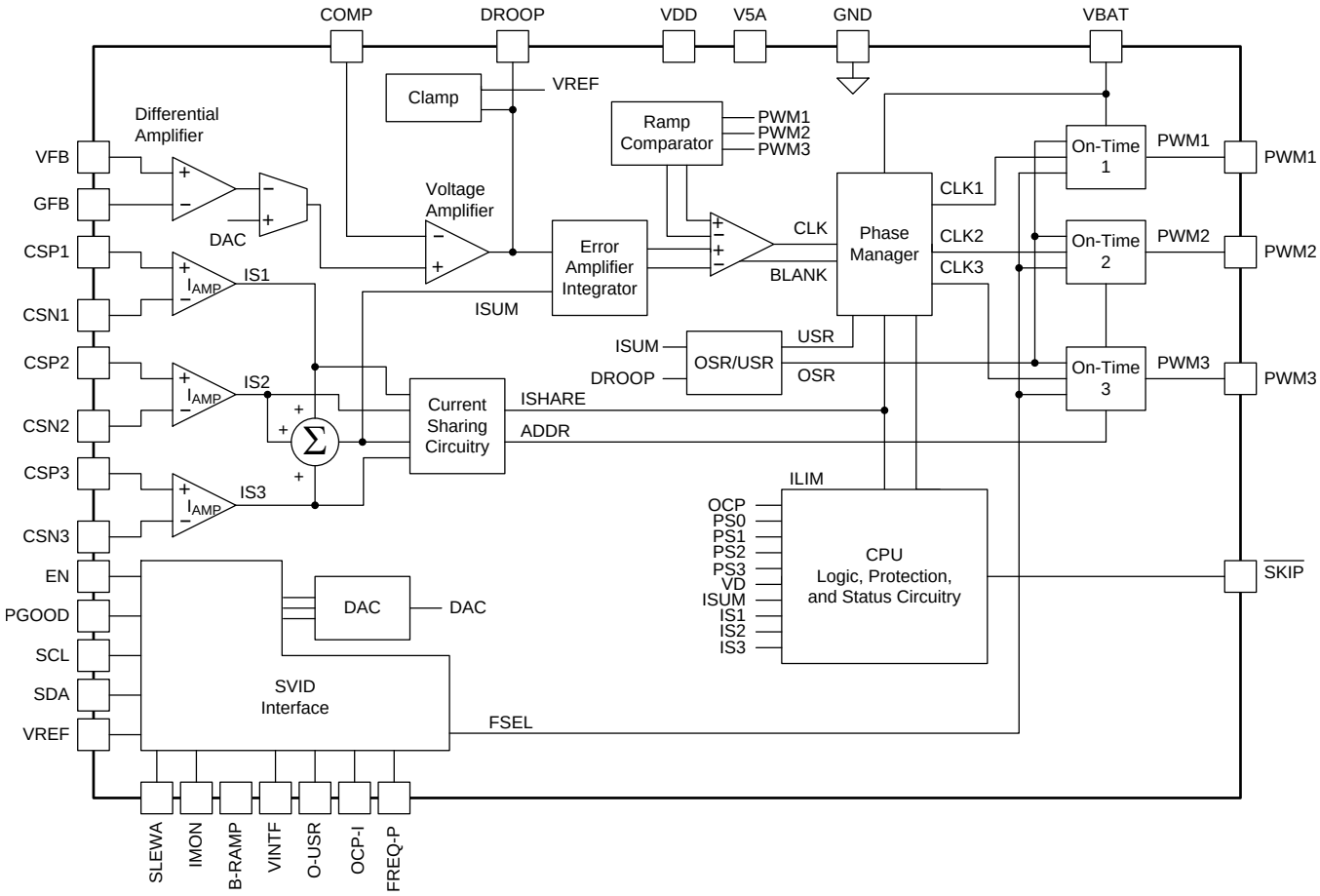

7.3 Feature Description

7.3.1 Current Sensing

The TPS53632 device provides independent channels of current feedback for every phase. These independent channels increase the system accuracy and reduce the dependence of circuit performance on layout compared to an externally summed architecture. The design can use *inductor DCR sensing* to yield the best efficiency or *resistor current sensing* to yield the most accuracy across wide temperature ranges. DCR sensing can be optimized by using a NTC thermistor to reduce the variation of current sense with temperature.

The pins CSP1, CSN1, CSP2, CSN2 and CSP3, CSN3 are the current sensing pins.

7.3.2 Load Transients

When the load increases suddenly, the output voltage immediately drops. This voltage drop is reflected as a rising voltage on the DROOP pin. This rising voltage forces the PWM to pulse sooner and more frequently which causes the inductor current to rapidly increase. As the inductor current reaches the new load current, a steady-state operating condition is reached and the PWM switching resumes the steady-state frequency. Similarly, when the load releases suddenly, the output voltage rises. This rise is reflected as a falling voltage on the COMP pin. This rising voltage forces a delay in the PWM pulses until the inductor current reaches the new load current, when the switching resumes and steady-state switching continues.

7.3.3 AutoBalance™ Current Sharing

The basic mechanism for current sharing is to sense the average phase current, then adjust the pulse width of each phase to equalize the current in each phase.

Copyright © 2014, Texas Instruments Incorporated

Feature Description (continued)

The PWM comparator (not shown) starts a pulse when the feedback voltage equals the reference voltage. The VIN voltage charges the $C_{t(on)}$ capacitor through the resistor $R_{t(on)}$. The pulse is terminated when the voltage at capacitor $C_{t(on)}$ matches the on-time (t_{ON}) reference, normally the DAC voltage (V_{DAC}).

A current sharing circuit is shown in Figure 13. For example, assume that the 5 µs averaged value of I1 = I2 = I3. In this case, the PWM modulator terminates at V_{DAC}, and the normal pulse width is delivered to the system. If instead, I1 > I_{AVG}, then an offset is subtracted from V_{DAC}, and the pulse width for Phase 1 is shortened, reducing the current in Phase 1 to compensate. If I1 < I_{AVG}, then a longer pulse is produced, again compensating on a pulse-by-pulse basis.

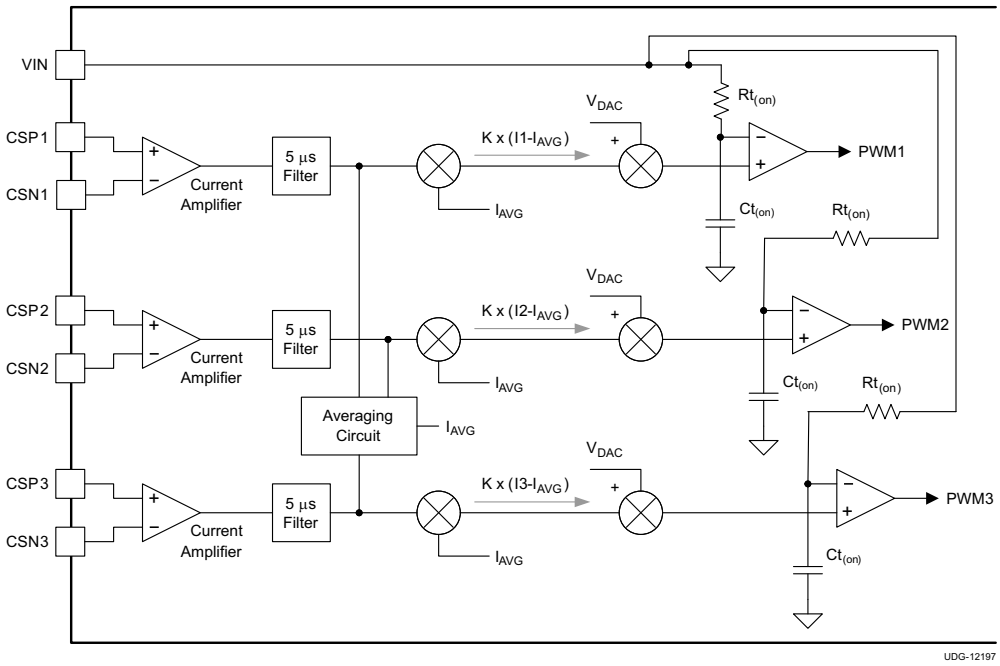

Figure 13. AutoBalance Current Sharing

7.3.4 PWM and $\overline{\text{SKIP}}$ Signals

The PWM and $\overline{\text{SKIP}}$ signals are outputs of the controller and serve as input to the driver or DrMOS type devices. Both are 5-V logic signals. The PWM signals are logic high when the high-side driver turns ON. The PWM signal must be low for the low-side drive to turn ON. When both the drive signals are OFF, the PWM is in tri-state.

7.3.5 5-V, 3.3-V and 1.8-V Undervoltage Lockout (UVLO)

The TPS53632 device continuously monitors the voltage on the V5A, VDD and VINTF pins to ensure a value high enough to bias the device properly and provide sufficient gate drive potential to maintain high efficiency. The converter starts with a voltage of approximately 4.4 V and has a nominal 200 mV of hysteresis. After the 5VA, VDD or VINTF pins go below the V_{UVLOL} level, the corresponding voltage must fall below V_{POR} (1.5 V) to reset the device.

The input voltage (V_{VIN}) does not include a UVLO function, so the circuit runs with power inputs as low as approximately 3 x V_{OUT}.

7.3.6 Output Undervoltage Protection (UVP)

Output undervoltage protection works in conjunction with the current protection described in the Overcurrent Protection (OCP) section. If the output voltage drops below the low PGOOD voltage threshold, then the drivers are turned OFF until the EN pin power is cycled.

Feature Description (continued)

7.3.7 Overcurrent Protection (OCP)

The TPS53632 device uses a valley current limiting scheme, so the ripple current must be considered. The DC current value at OCP (I_{OCP}) is the OCP limit value plus half of the ripple current. Current limiting occurs on a phase-by-phase and pulse-by-pulse basis. If the voltage between the CSPx and CSNx pins is above the OCP value, the converter delays the next ON pulse until that voltage difference drops below the OCP limit. For inductor current sensing circuits, the voltage between the CSPx and CSNx pins is the inductor DCR value multiplied by the resistor divider which is part of the NTC compensation network. As a result, a wide range of OCP values can be obtained by changing the resistor divider value. In general, use the highest OCP setting possible with the least attenuation in the resistor divider to provide as much signal to the device as possible. This provides the best performance for all parameters related to current feedback.

In OCP mode, the voltage drops until the UVP limit is reached. Then the converter sets the PGOOD to inactive, and the drivers are turned OFF. The converter remains in this state until the device is reset by the V5A, VDD or VINTF rails.

7.3.8 Overvoltage Protection

An OVP condition is detected when the output voltage is greater than the PGDH voltage, and greater than V_{DAC}. V_{OUT} > + V_{PGDH} greater than V_{DAC}. In this case, the converter sets PGOOD inactive, and turns ON the drive for the low-side MOSFET. The converter remains in this state until the device is reset by cycling the V5A, VDD or VINTF pin. However, the OVP threshold is *blanked* much of the time. In order to provide protection to the processor 100% of the time, there is a second OVP level fixed at V_{OVPH} which is always active. If the fixed OVP condition is detected, the PGOOD are forced inactive and the low-side MOSFETs are tuned ON. The converter remains in this state until the V5A, VDD or VINTF pin is reset.

7.3.9 Analog Current Monitor, IMON and Corresponding Digital Output Current

The TPS53632 device includes a current monitor function. The current monitor supplies an analog voltage, proportional to the load current, on the IMON pin.

The current monitor function is related to the OCP selection resistors. The R_{OCP} is the resistor between the OCP-I pin and GND and R_{CIMON} is the resistor between the IMON pin to the OCP-I pin that sets the current monitor gain. Equation 1 shows the calculation for the current monitor gain.

$$V_{IMON} = 10 \times 1 + \frac{(R_{IMON})}{(R_{OCP})} \times \sum V_{CSn} \xrightarrow{yields} V$$

where

- ΣV_{CS} is the sum of the DC voltages at the inputs to the current sense amplifiers (1)

To ensure stable current monitor operation and at the same time provide a fast dynamic response, connect a capacitor with a value between 4.7-nF and 10-nF between the IMON pin and GND.

Set the analog current monitor so that at the maximum processor current ($I_{CC(max)}$) level, the IMON voltage is 1.7 V. This corresponds to a digital output current value of ‘FF’ in register 03H.

7.3.10 Addressing

The TPS53632 device can be configured for three different base addresses by setting a voltage on the SLEWA pin. Configure a resistor divider on SLEWA from VREF to GND. A resistor between the SLEWA pin and GND sets the slew rate. Once the slew rate resistor is selected, the resistor from the VREF pin to the SLEWA pin can be chosen based on the required base address. For a base address of 0, the VREF to SLEWA resistor can be left open.

7.3.11 I^2C Interface Operation

The TPS53632 device includes a slave I^2C interface accessed via the SCL (serial clock) and SDA (serial data) pins. The interface sets the base VID value, receives current monitor telemetry, and controls functions described in this section. It operates when EN = low, with the bias supplies in regulation. It is compliant with I^2C specification UM10204, Revision 3.0. The characteristics are:

- Addressing

Copyright © 2014, Texas Instruments Incorporated

Feature Description (continued)

- – 7-bit addressing; address range is 100 0xxx (binary)
- – Last three bits are determined by the SLEWA pin at start-up
- Byte read / byte write protocols only (See figures below)
- Frequency
  - – 100 kHz
  - – 400 kHz
  - – 1 MHz
  - – 3.4 MHz
- Logic inputs are 1.8-V logic levels (3.3-V tolerant)

7.3.11.1 Key for Protocol Examples

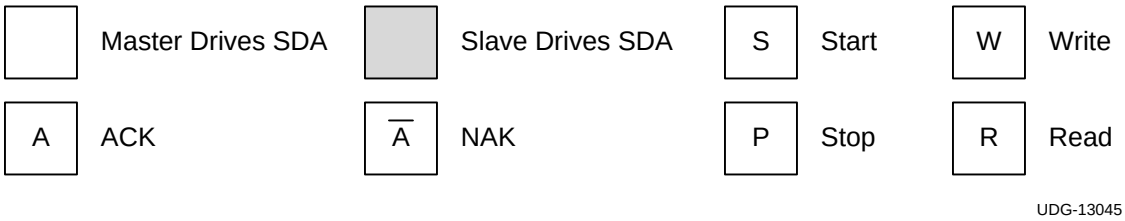

7.3.11.2 Protocol Examples

The good byte read transaction the controller ACKs and the master terminates with a NAK/stop.

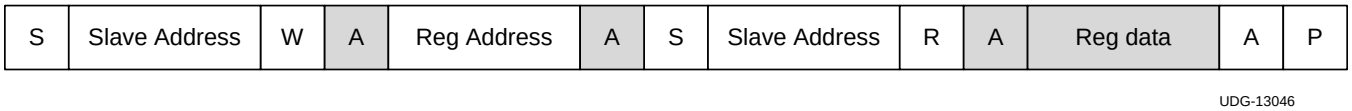

Figure 14. Good Byte Read Transaction

The controller issues a NAK to the read command with an invalid register address.

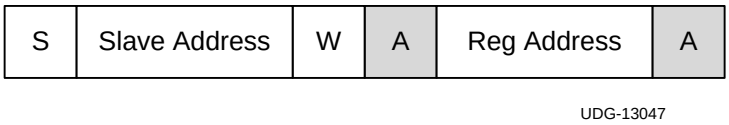

Figure 15. NAK Invalid Register Address

Figure 16 illustrates a good byte write.

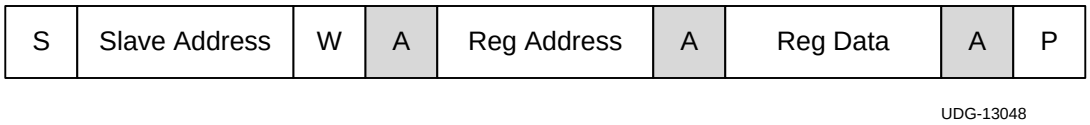

Figure 16. Good Byte Write

The controller issues a NAK to a write command with an invalid register address.

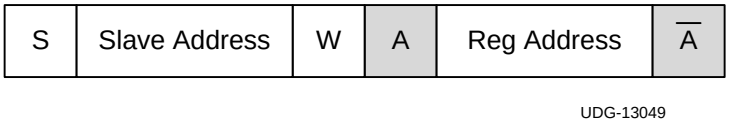

Figure 17. Invalid NAK Register Address

Feature Description (continued)

The controller issues a NAK to a write command for the condition of invalid data.

S	Slave Address	W	A	Reg Address	A	Reg Data	A	P

UDG-13050

Figure 18. Invalid NAK Register Data

The following master code sequence is executed to enter Hs (3.4-MHz SCL) mode.

S	8'b00001xxx	A

UDG-13051

Figure 19. Master Code Sequence

7.3.12 Start-Up Sequence

The TPS53632 initializes when all of the supply voltages rise above the UVLO thresholds. This function is also know as a *cold boot*. The device then reads all of the various settings (such as frequency and overcurrent protection). This process takes less than 1.2 ms. During this time, the VSR pin initializes to the BOOT voltage. The output voltage rises to the voltage select register (VSR) level when the EN pin (enable) goes high. As soon as the BOOT sequence completes, PGOOD is HIGH and the I^2C interface can be used to change the voltage select register. The current VSR value is held when EN goes low and returns to a high state This function is also know as a *warm boot*). The VSR can be changed when EN is low, however, this is not recommended prior to completion of the cold boot process.

7.3.13 Phase Add and Drop Operation

The phase add and phase drop operations are enabled by default in the TPS53632 device. The converter starts up in multi-phase CCM mode and reduces phase count until reaching single phase DCM mode as the load is reduced. This action takes place at a fixed percentage of the OCP level defined in the *Electrical Characteristics* table. The controller automatically adds phases when the current exceeds the defined percentage of the OCP value.

To disable the automatic *phase and drop operation*, connect a resistor between the VREF pin and the FREQ-P pin so that the voltage is above the value specified in the parameter table.

7.3.14 Power Good Operation

PGOOD is an open-drain output pin that is designed to be pulled up with an external resistor to a voltage 3.6 V or less. Normal PGOOD operation (exclusive of OC or MAXVID interrupt action) is shown in Figure 20. On initial power-up, a power good status occurs within 6 µs of the DAC reaching its target value. When EN is brought low, the PGOOD pin is also brought low for 250 µs and then is allowed to float. The TPS53632 device pulls down the PGOOD signal when the EN signal subsequently goes high and returns high again within 6 µs of the end of the DAC ramp. The delay period between the EN pin going high and the PGOOD pin going low in this case is less than 1 µs.

Figure 20 shows the power good operation at initial start up and with falling and rising EN.

Copyright © 2014, Texas Instruments Incorporated

Feature Description (continued)

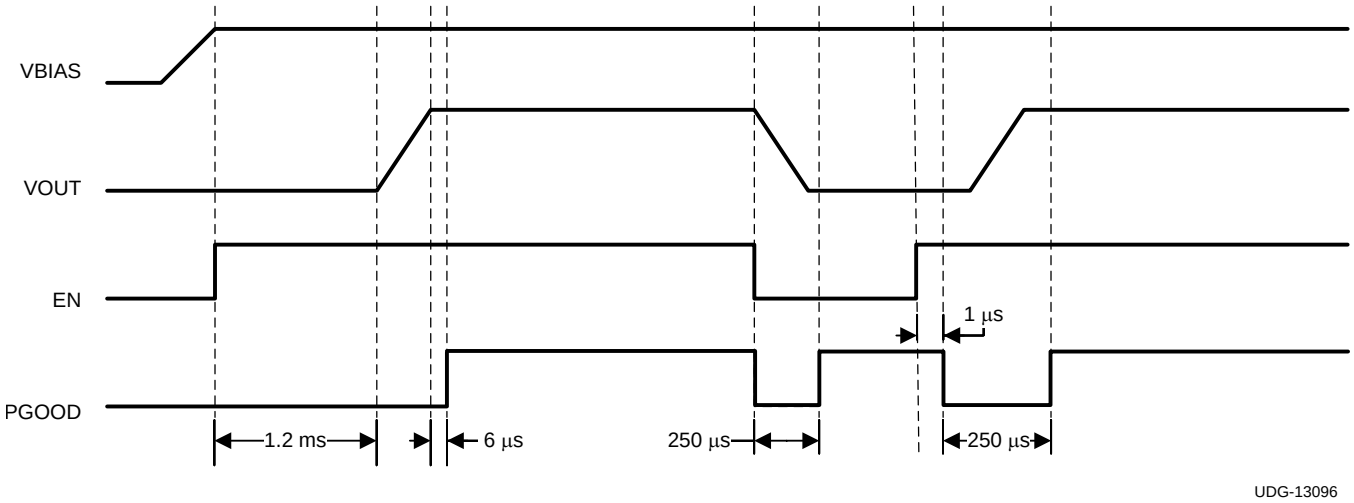

Figure 20. Power Good Operation

7.3.15 Input Voltage Limits

The number of input phases supported varies with the input voltage. See Table 1 for limits. The minimum input voltage is lower for lower frequency operation and/or lower output voltages.

Table 1. Input Voltage Limits vs Number of Phases at 1-MHz Switching Frequency

NUMBER OF PHASES	$V_{IN(min)}$ (V)	$V_{OUT(max)}$ (V)
3	5.5	1.28
2	3.7	
1	2.5	

7.3.16 Fault Behavior

The TPS53632 device has a complete suite of fault detection and protection functions, including input undervoltage lockout (UVLO) on all power inputs, overvoltage and overcurrent limiting and output undervoltage detection. The protection limits are summarized in Table 1. The converter suspends switching when the limits are exceeded and the PGOOD pin goes low. In this state, the fault register 14h is readable. To exit fault protection mode, power must be cycled.

Table 2. TPS53632 VID Table

VID6	VID5	VID4	VID3	VID2	VID1	VID0	HEX	VOLTAGE
0	0	1	1	0	0	1	19	0.5000
0	0	1	1	0	1	0	1A	0.5100
0	0	1	1	0	1	1	1B	0.5200
0	0	1	1	1	0	0	1C	0.5300
0	0	1	1	1	0	1	1D	0.5400
0	0	1	1	1	1	0	1E	0.5500
0	0	1	1	1	1	1	1F	0.5600
0	1	0	0	0	0	0	20	0.5700
0	1	0	0	0	0	1	21	0.5800
0	1	0	0	0	1	0	22	0.5900
0	1	0	0	0	1	1	23	0.6000
0	1	0	0	1	0	0	24	0.6100

Copyright © 2014, Texas Instruments Incorporated

Table 2. TPS53632 VID Table (continued)

VID6	VID5	VID4	VID3	VID2	VID1	VID0	HEX	VOLTAGE
0	1	0	0	1	0	1	25	0.6200
0	1	0	0	1	1	0	26	0.6300
0	1	0	0	1	1	1	27	0.6400
0	1	0	1	0	0	0	28	0.6500
0	1	0	1	0	0	1	29	0.6600
0	1	0	1	0	1	0	2A	0.6700
0	1	0	1	0	1	1	2B	0.6800
0	1	0	1	1	0	0	2C	0.6900
0	1	0	1	1	0	1	2D	0.7000
0	1	0	1	1	1	0	2E	0.7100
0	1	0	1	1	1	1	2F	0.7200
0	1	1	0	0	0	0	30	0.7300
0	1	1	0	0	0	1	31	0.7400
0	1	1	0	0	1	0	32	0.7500
0	1	1	0	0	1	1	33	0.7600
0	1	1	0	1	0	0	34	0.7700
0	1	1	0	1	0	1	35	0.7800
0	1	1	0	1	1	0	36	0.7900
0	1	1	0	1	1	1	37	0.8000
0	1	1	1	0	0	0	38	0.8100
0	1	1	1	0	0	1	39	0.8200
0	1	1	1	0	1	0	3A	0.8300
0	1	1	1	0	1	1	3B	0.8400
0	1	1	1	1	0	0	3C	0.8500
0	1	1	1	1	0	1	3D	0.8600
0	1	1	1	1	1	0	3E	0.8700
0	1	1	1	1	1	1	3F	0.8800
1	0	0	0	0	0	0	40	0.8900
1	0	0	0	0	0	1	41	0.9000
1	0	0	0	0	1	0	42	0.9100
1	0	0	0	0	1	1	43	0.9200
1	0	0	0	1	0	0	44	0.9300
1	0	0	0	1	0	1	45	0.9400
1	0	0	0	1	1	0	46	0.9500
1	0	0	0	1	1	1	47	0.9600
1	0	0	1	0	0	0	48	0.9700
1	0	0	1	0	0	1	49	0.9800
1	0	0	1	0	1	0	4A	0.9900
1	0	0	1	0	1	1	4B	1.0000
1	0	0	1	1	0	0	4C	1.0100
1	0	0	1	1	0	1	4D	1.0200
1	0	0	1	1	1	0	4E	1.0300
1	0	0	1	1	1	1	4F	1.0400
1	0	1	0	0	0	0	50	1.0500
1	0	1	0	0	0	1	51	1.0600
1	0	1	0	0	1	0	52	1.0700
1	0	1	0	0	1	1	53	1.0800

Copyright © 2014, Texas Instruments Incorporated

Table 2. TPS53632 VID Table (continued)

VID6	VID5	VID4	VID3	VID2	VID1	VID0	HEX	VOLTAGE
1	0	1	0	1	0	0	54	1.0900
1	0	1	0	1	0	1	55	1.1000
1	0	1	0	1	1	0	56	1.1100
1	0	1	0	1	1	1	57	1.1200
1	0	1	1	0	0	0	58	1.1300
1	0	1	1	0	0	1	59	1.1400
1	0	1	1	0	1	0	5A	1.1500
1	0	1	1	0	1	1	5B	1.1600
1	0	1	1	1	0	0	5C	1.1700
1	0	1	1	1	0	1	5D	1.1800
1	0	1	1	1	1	0	5E	1.1900
1	0	1	1	1	1	1	5F	1.2000
1	1	0	0	0	0	0	60	1.2100
1	1	0	0	0	0	1	61	1.2200
1	1	0	0	0	1	0	62	1.2300
1	1	0	0	0	1	1	63	1.2400
1	1	0	0	1	0	0	64	1.2500
1	1	0	0	1	0	1	65	1.2600
1	1	0	0	1	1	0	66	1.2700
1	1	0	0	1	1	1	67	1.2800
1	1	0	1	0	0	0	68	1.2900
1	1	0	1	0	0	1	69	1.3000
1	1	0	1	0	1	0	6A	1.3100
1	1	0	1	0	1	1	6B	1.3200
1	1	0	1	1	0	0	6C	1.3300
1	1	0	1	1	0	1	6D	1.3400
1	1	0	1	1	1	0	6E	1.3500
1	1	0	1	1	1	1	6F	1.3600
1	1	1	0	0	0	0	70	1.3700
1	1	1	0	0	0	1	71	1.3800
1	1	1	0	0	1	0	72	1.3900
1	1	1	0	0	1	1	73	1.4000
1	1	1	0	1	0	0	74	1.4100
1	1	1	0	1	0	1	75	1.4200
1	1	1	0	1	1	0	76	1.4300
1	1	1	0	1	1	1	77	1.4400
1	1	1	1	0	0	0	78	1.4500
1	1	1	1	0	0	1	79	1.4600
1	1	1	1	0	1	0	7A	1.4700
1	1	1	1	0	1	1	7B	1.4800
1	1	1	1	1	0	0	7C	1.4900
1	1	1	1	1	0	1	7D	1.5000
1	1	1	1	1	1	0	7E	1.5100
1	1	1	1	1	1	1	7F	1.5200

Copyright © 2014, Texas Instruments Incorporated

7.4 Device Functional Modes

7.4.1 PWM Operation

The Functional Block Diagram and Figure 21 show how the converter operates in continuous conduction mode (CCM).

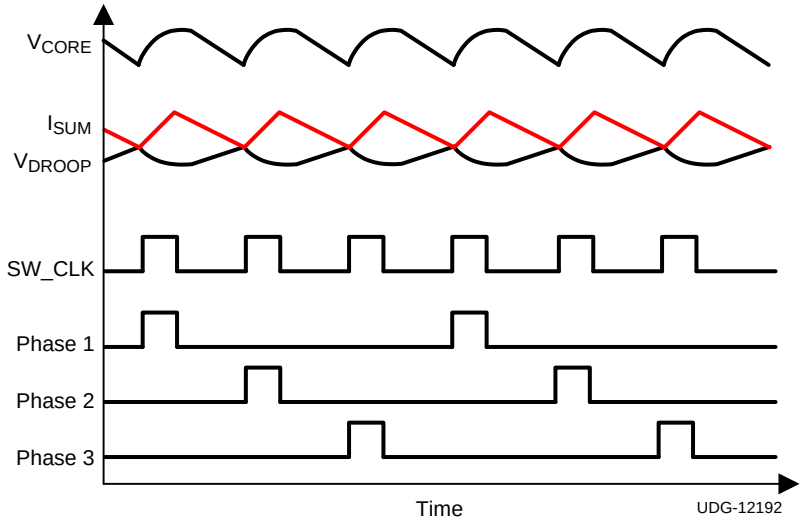

Figure 21. D-CAP+™ Mode Basic Waveforms

Starting with the condition that the high-side FETs are off and the low-side FETs are on, the summed current feedback (I_{SUM}) is higher than the error amplifier output (V_{COMP}). I_{CMP} falls until it hits V_{COMP}, which contains a component of the output ripple voltage. The PWM comparator senses where the two waveforms cross and triggers the on-time generator, which generates the internal SW_CLK signal. Each SW_CLK signal corresponds to one switching ON pulse for one phase.

During single-phase operation, every SW_CLK signal generates a switching pulse on the same phase. Also, I_{SUM} voltage corresponds to a single-phase inductor current only.

During multi-phase operation, the controller distributes the SW_CLK signal to each of the phases in a cycle. Using the summed inductor current and cyclically distributing the ON pulses to each phase automatically gives the required interleaving of 360/n, where n is the number of phases.

7.5 Configuration and Programming

After the 5-V, 3.3-V, or V_{INTF} power is applied to the controller (all are above UVLO level), the following information is latched and cannot be changed anytime during operation. The *Electrical Characteristics* table defines the values of the selections.

7.5.1 Operating Frequency

The resistor between the FREQ-P pin and GND sets the switching frequency. See the *Electrical Characteristics* table for the resistor settings corresponding to each frequency selection.

NOTE

The operating frequency is a quasi-fixed frequency in the sense that the ON time is fixed based on the input voltage (at the VIN pin) and output voltage (set by VID). The OFF time varies based on various factors such as load and power-stage components.

7.5.2 Overcurrent Protection (OCP) Level

The resistor from OCP-I to GND sets the OCP level of the CPU channel. See the *Electrical Characteristics* table for the resistor settings corresponding to each OCP level.

Copyright © 2014, Texas Instruments Incorporated

Configuration and Programming (continued)

7.5.3 IMON Gain

The resistors from IMON to OCP-I and OCP-I to GND set the DC load current monitor (IMON) gain.

7.5.4 Slew Rate

The SetVID fast slew rate is set by the resistor from SLEWA pin to GND. See the *Electrical Characteristics* table for the resistor settings corresponding to each slew rate setting.

7.5.5 Base Address

The voltage on SLEWA pin sets the device base address.

7.5.6 Ramp Selection

The resistor from RAMP to GND sets the ramp compensation level. See the *Electrical Characteristics* table for the resistor settings corresponding to each ramp level.

7.5.7 Active Phases

Normally, the controller is configured to operate in 3-phase mode. To enable 2-phase mode, tie the CSP3 pin to a 3.3-V supply and the CSN3 pin to GND. To enable 1-phase mode, tie the CSP2 and CSP3 pins to a 3.3-V supply and tie the CSN2 and CSN3 pins to GND.

7.6 Register Maps

The I^2C interface can support 400-kHz, 1-MHz, and 3.4-MHz clock frequencies. The I^2C interface is accessible even when EN is low. The following registers are accessible via I^2C.

7.6.1 Voltage Select Register (VSR) (00h)

- Type: Read and write
- Power-up value: 48h. This value can be changed before the rising edge of EN to change BOOT voltage.
- EN rising (after power-up): prior programmed value
- See Table 2 for exact values
- A command to set VSR < 19h (minimum VID) generates a NAK and the VSR remains at the prior value

b7	b6	b5	b4	b3	b2	b1	b0
–	VID[6:0]						

7.6.2 IMON Register (03h)

- Type: Read only
- Power-up value: 00h
- EN rising (after power-up):00h

b7	b6	b5	b4	b3	b2	b1	b0
MSB	–	–	–	–	–	–	LSB

7.6.3 VMAX Register (04h)

- Type: Read / write (see below)
- Power-up value: 1.28 V (OTP value)
- EN rising (after power-up): Last written value

b7	b6	b5	b4	b3	b2	b1	b0
Lock	MSB	–	–	–	–	–	LSB

Bit definitions:

BIT	NAME	DEFINITION
0 - 6	VMAX	Maximum VID setting
7	Lock	Access protection of the VMAX register 0: No protection, R/W access to bits 0-6 1: Access is read only; reset after UVLO event.

7.6.4 Power State Register (06h)

- Type: Read and write
- Power-up value: 00h
- EN rising (after power-up): 00h

b7	b6	b5	b4	b3	b2	b1	b0
–	–	–	–	–	–	MSB	LSB

Bit definitions:

VALUE	DEFINITION
0	Multi-phase CCM
1	Single-phase CCM
2	Single-phase DCM

7.6.5 SLEW Register (07h)

- Type: Read and write (see below)
- Power-up value: Defined by SLEWA pin at power-up
- EN rising (after power-up): Last written value
- Write only a single ‘1’ for the SLEW rate desired

b7	b6	b5	b4	b3	b2	b1	b0
48 mV/µs	42mV/µs	36 mV/µs	30 mV/µs	24 mV/µs	18 mV/µs	12 mV/µs	6 mV/µs

7.6.6 Lot Code Registers (10-13h)

- Type: 8-bits; read only
- Power-up value: Programmed at factory

7.6.7 Fault Register (14h)

- Type: 8-bits; read only
- Power-up value: 00h

b7	b6	b5	b4	b3	b2	b1	b0
–	–	–	–	Device thermal shutdown	OVP	UVP	OCP

Copyright © 2014, Texas Instruments Incorporated

8 Applications and Implementation

8.1 Application Information

The TPS53632 device has a very simple design procedure. A Microsoft Excel®-based component value calculation tool is available. Please contact your local TI representative to get a copy of the spreadsheet.

8.2 Typical Application

8.2.1 3-Phase D-CAP+™, Step-Down Application

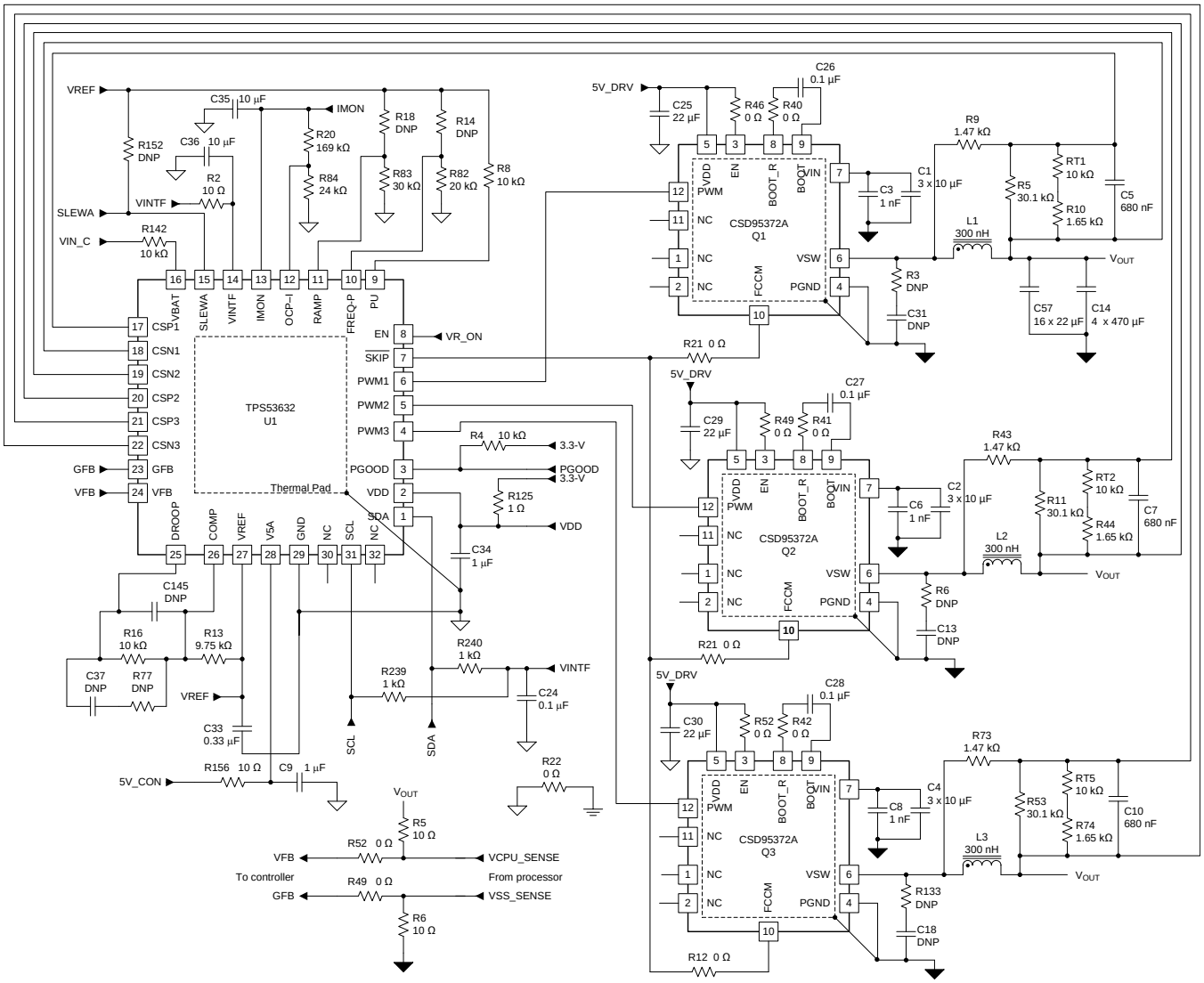

Figure 22. 3-Phase D-CAP+™, Step-Down Application with Power Stages

8.2.1.1 Design Requirements

Design example specifications:

- Number of phases: 3
- Input voltage range: 10 V to 14 V
- V_{OUT} = 1.0 V
- $I_{CC(max)}$ = 80 A
- Slew rate (minimum): 12 mV/µs

Typical Application (continued)

- Load-line = 1 mΩ

8.2.1.2 Detailed Design Procedure

8.2.1.2.1 Step 1: Select Switching Frequency

The switching frequency is selected by a resistor (R_F) between the FREQ_P pin and GND. The frequency is approximate and expected to vary based on load and input voltage.

Table 3. TPS53632 Device Frequency Selection Table

SELECTION RESISTOR (R_F) VALUE (kΩ)	OPERATING FREQUENCY (f_{SW}) (kHz)
20	300
24	400
30	500
39	600
56	700
75	800
100	900
150	1000

For this design, choose a switching frequency of 300 kHz. So, R_F = 20 kΩ.

8.2.1.2.2 Step 2: Set The Slew Rate

A resistor to GND (R_{SLEWA}) on SLEWA pin sets the slew rate. For a minimum 12 mV/µs slew rate, the resistor R_{SLEWA} = 24 kΩ.

Table 4. Slew Rate Versus Selection Resistor

SELECTION RESISTOR R_{SLEWA} (kΩ)	MINIMUM SLEW RATE (mV/µs)
20	6
24	12
30	18
39	24
56	30
75	36
100	42
150	48

NOTE

The voltage on the SLEWA pin also sets the base address. For a base address of 00, the SLEWA pin should have only one resistor, R_{SLEW} to GND. For other base addresses, a resistor can be connected between the SLEWA pin and the VREF pin (1.7 V). This resistor can be calculated to set the corresponding voltage for the required address listed in Table 5.

Copyright © 2014, Texas Instruments Incorporated

Table 5. Address Selection

SLEWA VOLTAGE	BASE ADDRESS
$V_{SLEWA} \le 0.30$ V	0
$0.35\ V \le V_{SLEWA} \le 0.45$ V	1
$0.55\ V \le V_{SLEWA} \le 0.65$ V	2
$0.75\ V \le V_{SLEWA} \le 0.85$ V	3
$0.95\ V \le V_{SLEWA} \le 1.05$ V	4
$1.15\ V \le V_{SLEWA} \le 1.25$ V	5
$1.35\ V \le V_{SLEWA} \le 1.45$ V	6
$1.55\ V \le V_{SLEWA} \le 1.65$ V	7

8.2.1.2.3 Step 3: Determine Inductor Value And Choose Inductor

Applications with smaller inductor values have better transient performance but also have higher voltage ripple and lower efficiency. Applications with higher inductor values have the opposite characteristics. It is common practice to limit the ripple current between 20% and 40% of the maximum current per phase. In this case, use 30%.

$$I_{P-P} = \frac{80(A)}{3} \times 0.4 = 10.6\ (A) \tag{2}$$

$$L = \frac{V \times dT}{I_{P-P}} \tag{3}$$

In this equation,

$$V = V_{IN(max)} - V_{OUT} = 13V \tag{4}$$

$$dT = \frac{V_{OUT}}{\left(f \times V_{IN(max)}\right)} = 238\,ns \tag{5}$$

So, calculating, L = 0.29 µH.

Choose an inductance value of 0.3 µH. The inductor must not saturate during peak loading conditions.

$$I_{SAT} = \left(\frac{I_{CC(max)}}{n} + \frac{I_{P-P}}{2}\right) \times 1.2 = 38.4\,A$$

where

- n is the number of phases (6)

The factor of 1.2 allows for current sensing and current limiting tolerances.

The chosen inductor should have the following characteristics:

- As flat as an inductance versus current curve as possible. Inductor DCR sensing is based on the idea L / DCR is approximately a constant through the current range of interest
- Either high saturation or soft saturation
- Low DCR for improved efficiency, but at least 0.6 mΩ for proper signal levels
- DCR tolerance as low as possible for load-line accuracy

For this application, choose a 0.3-µH, 0.29-mΩ inductor.

8.2.1.2.4 Step 4: Determine Current Sensing Method

The TPS53632 device supports both resistor sensing and inductor DCR sensing. Inductor DCR sensing is chosen. For resistor sensing, substitute the resistor value for $R_{CS(eff)}$ in the subsequent equations.

8.2.1.2.5 Step 5: DCR Current Sensing

Design the thermal compensation network and selection of OCP. In most designs, NTC thermistors are used to compensate thermal variations in the resistance of the inductor winding. This winding is generally copper, and so has a resistance coefficient of 3900 PPM/°C. NTC thermistors, as an alternative, have very non-linear characteristics and need two or three resistors to linearize them over the range of interest. A typical DCR circuit is shown in Figure 23.

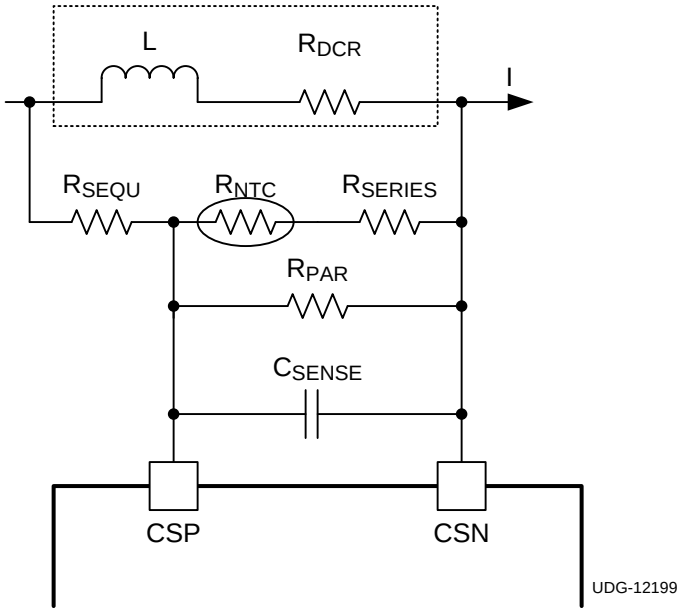

Figure 23. Typical DCR Sensing Circuit

In this design example, the voltage across the C_{SENSE} capacitor exactly equals the voltage across R_{DCR} when:

$$\frac{L}{R_{DCR}} - C_{SENSE} \times R_{EQ} \tag{7}$$

$$R_{EQ} = \frac{R_{P_N}}{R_{SEQU} - R_{P_N}}$$

where

- R_{EQ} is the series (or parallel) combination of R_{SEQU}, R_{NTC}, R_{SERIES} and R_{PAR} (8)

$$R_{P_N} = \frac{R_{PAR} \times (R_{NTC} + R_{SERIES})}{R_{PAR} + R_{NTC} + R_{SERIES}} \tag{9}$$

Ensure that C_{SENSE} is a capacitor type which is stable over temperature. Use X7R or better dielectric (C0G preferred).

Because calculating these values by hand is difficult, TI offers a spreadsheet using the Excel solver function available to calculate them for you. Contact a TI representative to get a copy of the spreadsheet.

In this design, the following values are input to the spreadsheet.

- L = 0.3 µH
- R_{DCR} = 0.29 mΩ
- Minimum Overcurrent Limit = 110 A
- Thermistor R25 = 10 kΩ and “B” value = 3380 kΩ

The spreadsheet then calculates the OCP setting and the values of R_{SEQU}, R_{SERIES}, R_{PAR}, and C_{SENSE}. In this case, the OCP setting is the value of the resistor that is conencted between the OCP-I pin and GND. (100 kΩ) The nearest standard component values are:

- R_{SEQU} = 1.47 kΩ

Copyright © 2014, Texas Instruments Incorporated

- R_{SERIES} = 1.65 kΩ
- R_{PAR} = 30.1 kΩ
- C_{SENSE} = 680 nF

Consider the effective divider ratio for the inductor DCR. Equation 10 shows the effective current sense resistance ($R_{CS(eff)}$ calculation.

$$R_{CS(eff)} = R_{DCR} \times \frac{R_{P_N}}{R_{SEQU} + R_{P_N}} \tag{10}$$

R_{P_N} is the series and parallel combination of R_{NTC}, R_{SERIES}, and R_{PAR}.

$$R_{P_N} = \frac{R_{PAR} \times (R_{NTC} + R_{SERIES})}{R_{PAR} + R_{NTC} + R_{SERIES}} \tag{11}$$

$R_{CS(eff)}$ is 0.244 mΩ.

8.2.1.2.6 Step 6: Select OCP Level

Set the OCP threshold level that corresponds to Equation 12.

$$I_{VALLEY} \times R_{CS(eff)} = V_{CS(ocp)} \tag{12}$$

$$I_{VALLEY} = \frac{I_{OCP}}{N_{PH}} - 0.5 - I_{RIPPLE} \tag{13}$$

Table 6. OCP Selection(1)

SELECTION RESISTOR R_{OCP} (kΩ)	TYPICAL $V_{CS(OCP)}$ (mV)
20	4
24	8
30	13
39	19
56	25
75	32
100	40
150	49

(1) If a corresponding match is not found, then select the next higher setting.

8.2.1.2.7 Step 7: Set the Load-Line Slope

The load-line slope is set by resistor, R_{DROOP} (between the DROOP pin and the COMP pin) and resistor R_{COMP} (between the COMP pin and the VREF pin). The gain of the DROOP amplifier (A_{DROOP}) is calculated in Equation 14.

$$A_{DROOP} = \left(1 + \left(\frac{R_{DROOP}}{R_{COMP}}\right)\right) = \left(\frac{\left(R_{CS(eff)} \times A_{CS}\right)}{R_{LL}}\right) = \frac{0.244\,m \times 6}{1.0\,m} = 1.46 \tag{14}$$

Set the value of R_{DROOP} to 10 kΩ, R_{COMP} as shown in Equation 15.

$$R_{COMP} = \frac{R_{DROOP}}{\left(A_{DROOP} - 1\right)} = 21.5\,k\Omega \tag{15}$$

Based on measurement, this value is adjusted to 9.75 kΩ.

NOTE

See Loop Compensation for Zero Load-Line for zero-load line.

8.2.1.2.8 Step 8: Current Monitor (IMON) Setting

Set the analog current monitor so that at $I_{CC(max)}$ the IMON pin voltage is 1.7 V. This corresponds to a digital I_{OUT} value of 'FF' in I^2C register 03H. The voltage on the IMON pin is shown in Equation 16.

$$V_{IMON} = 10 \times 1 + \frac{(R_{IMON})}{(R_{OCP})} \times \sum V_{CSn} \xrightarrow{yields} V \tag{16}$$

So,

$$1.7 = 10 \times \left(1 + \frac{R_{IMON}}{R_{OCP}}\right) \times R_{CS(eff)} \times I_{CC(max)}$$

where

- $I_{CC(max)}$ is 80 A
- $R_{CS(eff)}$ is 0.244 mΩ
- R_{OCP} is 24 kΩ (17)

Solving, R_{IMON} = 169 kΩ. R_{IMON} is connected from IMON pin to OCP-I pin.

Copyright © 2014, Texas Instruments Incorporated

8.2.1.3 Application Performance Plots

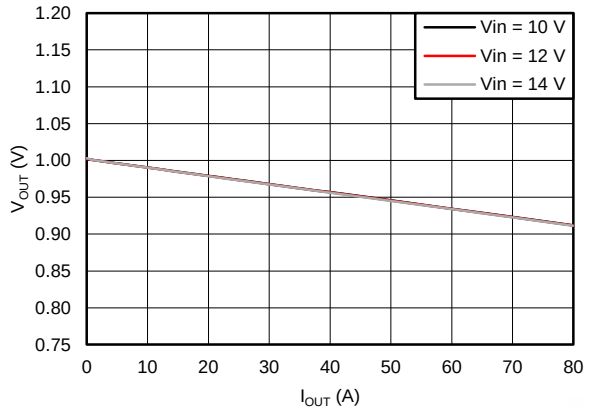

Figure 24. Output Voltage vs Output Current

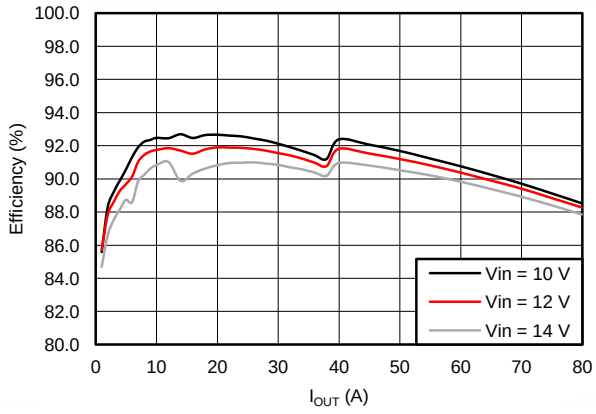

Figure 25. Efficiency vs Output Current

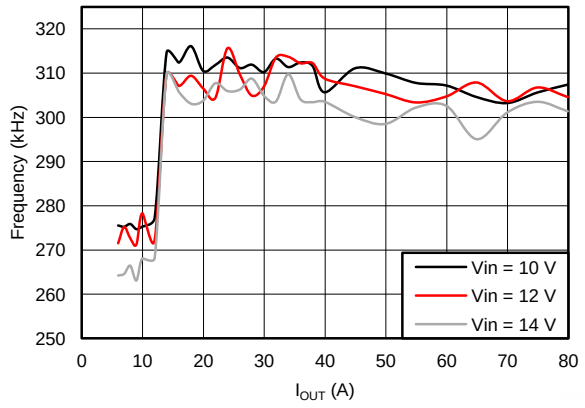

Figure 26. Switching Frequency vs Output Current

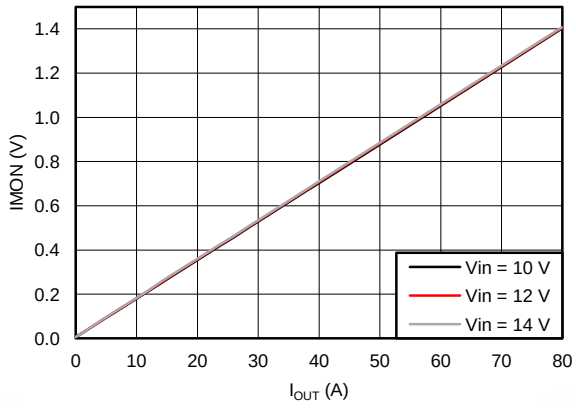

Figure 27. IMON Voltage vs Output Current

8.2.1.4 Loop Compensation for Zero Load-Line

The TPS53632 device control architecture (current mode, constant on-time) has been analyzed by the Center for Power Electronics Systems (CPES) at Virginia Polytechnic and State University. The following equations are from the presentation: *Equivalent Circuit Representation of Current-Mode Control* from November 21, 2008.

A simplified control loop diagram is shown in Figure 28. One of the benefits of this technology is the lack of the sample and hold effect that limits the bandwidth of fixed frequency current mode controllers and causes sub-harmonic oscillations.

The open loop gain, G_{OL}, is the gain of the error amplifier, multiplied by the control-to-output gain and is calculated in Equation 18.

$$G_{OL} = G_{COMP} \times G_{CO} \tag{18}$$

The control-to-output gain circuitry is shown in Figure 28.

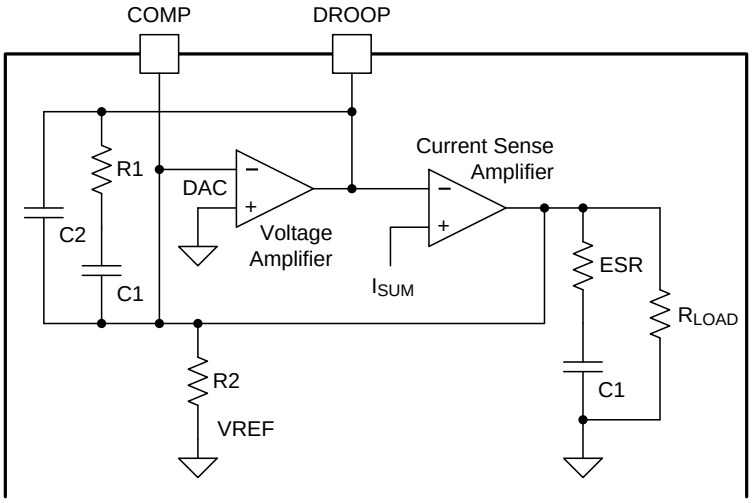

Figure 28. Control To Output Gain Circuitry

The control-to-output gain is calculated in Equation 19.

$$\frac{v_O}{v_C} = K_C \times \frac{1}{1 + \left(\frac{\omega}{Q_1 \times \omega_1}\right) + \left(\frac{\omega^2}{{\omega_1}^2}\right)} \times \frac{(\omega \times R_{ESR} \times C_{OUT}) + 1}{\left(\frac{\omega}{\omega_a}\right) + 1}$$

where

- $K_C = \dfrac{\left(\frac{R_{LOAD}}{R_i}\right)}{1 + \left(\frac{t_{ON} \times R_{LOAD}}{2 \times L_S}\right)}$
- $\omega_1 = \dfrac{\pi}{t_{ON}}$
- $Q_1 = \dfrac{2}{\pi}$
- $t_{ON} = \dfrac{V_{OUT}}{V_{IN} \times f_{SW}}$
- $\omega_a = \dfrac{1 + \left(\frac{t_{ON} \times R_{LOAD}}{2 \times L_S}\right)}{R_{LOAD} \times C_{OUT} \times \left(1 + \left(\frac{t_{ON} \times R_{LOAD}}{2 \times L_S}\right)\right)}$ (19)

Copyright © 2014, Texas Instruments Incorporated

For this converter, $R_i = R_{CS(eff)} \times A_{CS}$

The theoretical control-to-output transfer function shows 0-dB bandwidth is approximately 20 kHz and the phase margin is greater than 90°. As a result, creating the desired loop response is a matter of adding an appropriate pole-zero or pole-zero-pole compensation for the high-gain system.

The loop compensation is designed to meet the following criteria:

1. Phase margin ≥ 60°
   (a) More stable and settles more quickly for repetitive transients
2. Bandwidth: $\frac{f_{SW}}{5} \geq BW \geq \frac{f_{SW}}{3}$
   (a) High-enough BW for good transient response.
   (b) If too high, the response for the voltage changes gets very "bumpy", as each voltage step causes several pulses very quickly.
3. The phase angle of the compensation at the switching frequency needs to be very near to 0 degrees (resistive)
   (a) Otherwise, there is a phase shift between DROOP and ISUM
   (b) Practically, this means the zero frequency should be < f_{SW} / 2, and any high-frequency pole (for noise rejection) needs to be > 2 × f_{SW}.

The voltage error amplifier is used in the design. The compensation technique used here is a type II compensator. Equation 20 describes the transfer function, which has a pole that occurs at the origin. The type II amplifier also has a 0 (f_Z) that can be programmed by selecting R1 and C1 values. In addition, the type II compensation network has a pole (f_P) that can be programmed by selecting R1 and C2.

$$G_{COMP} = \frac{1}{s \times (C1 + C2) \times R2} \times \frac{(s \times R1 \times C1 + 1)}{s \times R1 \times \left(\frac{C1 \times C2}{C1 + C2}\right) + 1} \tag{20}$$

$$f_Z = \frac{1}{2\pi \times R1 \times C1} \tag{21}$$

$$f_P = \frac{1}{2\pi \times R1 \times \frac{C1 \times C2}{C1 + C2}} \tag{22}$$

R1 sets the loop crossover to correct for the gain at control to output function. In this design, select R2 = 2 kΩ.

$$R1 = R2 \times 10^{\left(\frac{-G_{CO(fc)}}{20}\right)} = 2k\Omega \times 10^{-\left(\frac{-10dB}{20}\right)} \tag{23}$$

Capacitor C1 adds phase margin at crossover frequency and can be set between 10% and 20% of the switching frequency.

$$C1 = \frac{1}{2\pi \times f_{SW} \times 0.1 \times R1} \tag{24}$$

The last consideration for the voltage loop compensation design is C2. The purpose of C2 is to cancel the phase gain caused by the ESR of the output capacitor in the control-to-output function after the loop crossover. To ensure the gain continues to roll off after the voltage loop crossover, the C2 is selected to meet Equation 25.

$$C2 = \frac{C_{OUT} \times ESR}{R1} \tag{25}$$

9 Power Supply Recommendations

This device is designed to operate from a supply voltage at the V5A pin (5-V power input for analog circuits) from 4.5 V to 5.5 V and a supply voltage at the VDD pin (3.3-V digital power input) from 3.1 V to 3.5 V, and a supply voltage at the VINTF pin from 1.7 V to 3.5 V. Use only a well-regulated supply. The VIN pin input must be connected to the conversion input voltage and must not exceed 28 V. Proper bypassing of the V5A and VDD input supplies is critical for noise performance, as is PCB layout and grounding scheme. See the recommendations in the Layout section.

Copyright © 2014, Texas Instruments Incorporated

10 Layout

10.1 Layout Guidelines

10.1.1 PCB Layout

- Check the pinout of the controller on schematic against the pinout of the datasheet.
- Have a component value calculator tool ready to check component values.
- Carefully check the choice of inductor and DCR.
- Carefully check the choice of output capacitors.
- Because the voltage and current feedback signals are fully differential, double check their polarity.
  - CSP1 / CSN1
  - CSP2 / CSN2
  - CSP3 / CSN3
  - VOUT_SENSE to VFB / GND_SENSE to GFB
- Make sure the pull-up on the SDA, and SCL lines are correct. Ensure there is a bypass capacitor close to the device on the pull-up VINTF rail to GND of the device.
- TI strongly recommends that the device GND be separate from the system and Power GND.

Most Critical Layout Rule

Make sure to separate noisy driver interface lines.

The driver (TPS51604) is outside of the device. All gate-drive and switch-node traces must be local to the inductor and MOSFETs.

10.1.2 Current Sensing Lines

Given the physical layout of most systems, the current feedback (CSPx and CSNx) may have to pass near the power chain.

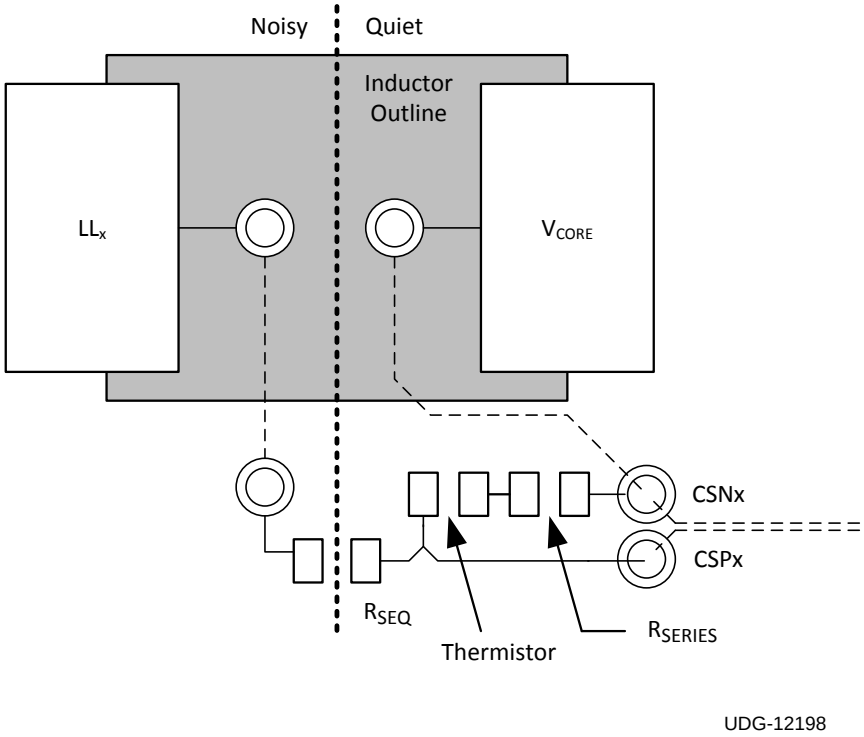

Figure 29. Kelvin Connections To The Inductor For DCR Sensing

Copyright © 2014, Texas Instruments Incorporated

Layout Guidelines (continued)

Good load-line, current sharing, and current limiting performance of the TPS53632 device requires clean current feedback, so take the following precautions:

- Ensure all vias in the CSPx and CSNx traces are isolated from all other signals.
- TI recommends dotted signal traces be run in internal planes.
- If possible, change the name of the CSNx trace if possible to prevent automatic ties to the V_{CORE} plane.
- Put R_{SEQU} at the boundary between noisy and quiet areas.
- Run CSPx and CSNx as a differential pair in a quiet layer.
- Place the capacitor as near to the device pins as possible.
- Make a Kelvin connection to the pads of the resistor or inductor used for current sensing. See Figure 29 for a layout example.
- Run the current feedback signals as a differential pair to the device.
- Run the lines in a quiet layer. Isolate the lines from noisy signals by a voltage or ground plane.
- Put the compensation capacitor for DCR sensing (C_{SENSE}) as close to the CS pins as possible.
- Place any noise filtering capacitors directly under or near the TPS53632 device and connect to the CS pins with the shortest trace length possible.

10.1.3 Feedback Voltage Sensing Lines

The voltage feedback coming from the CPU socket must be routed as a differential pair all the way to the VFB and GFB pins of the TPS53632 device. Avoid routing over switch-node and gate-drive traces.

10.1.4 PWM And $\overline{\text{SKIP}}$ Lines

The PWM and $\overline{\text{SKIP}}$ lines should be routed from the TPS53632 device to the driver without crossing any switch-node or the gate drive signals.

10.1.4.1 Minimize High Current Loops

Figure 30 shows the primary current loops in each phase, numbered in order of importance.

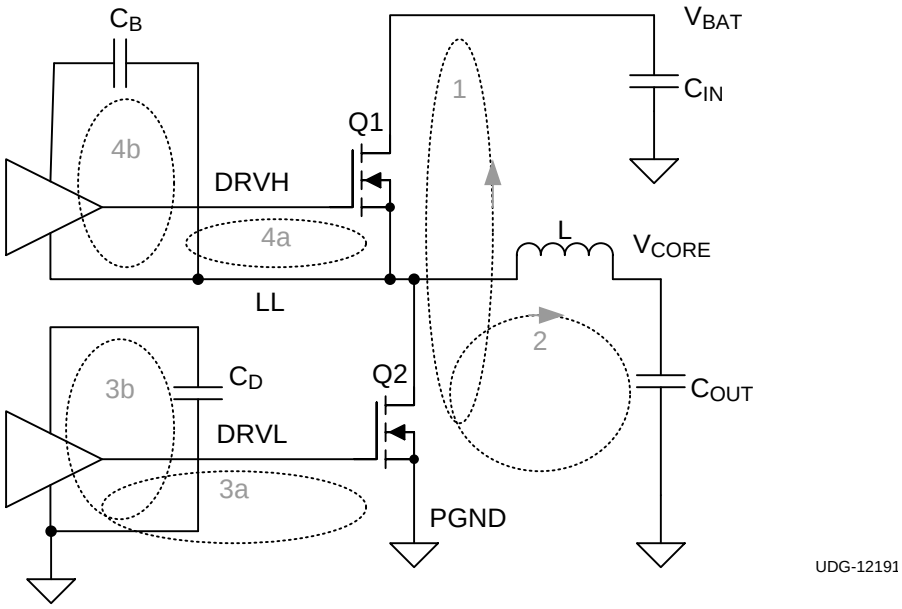

Figure 30. Major Current Loops To Minimize

The most important loop to minimize the area of is loop 1, the path from the input capacitor through the high and low-side FETs, and back to the capacitor through ground.

Layout Guidelines (continued)

Loop 2 is from the inductor through the output capacitor, ground, and Q2. The layout of the low-side gate drive (Loops 3a and 3b) is important. The guidelines for the gate drive layout are:

- Make the low-side gate drive as short as possible (1 in or less preferred).
- Make the DRVL width to length ratio of 1:10, wider (1:5) if possible.
- If changing layers is necessary, use at least two vias.

10.1.5 Power Chain Symmetry

The TPS53632 device does not require special care in the layout of the power chain components because independent isolated current feedback is provided. Lay out the phases in a symmetrical manner, if possible. The rule is: the current feedback from each phase needs to be clean of noise and have the same effective current-sense resistance.

10.1.6 Component Location

Place components as close to the device in the following order.

1. CS pin noise filtering components
2. COMP pin and DROOP pin compensation components
3. Decoupling capacitors for VREF, VDD, V5A, and VINTF
4. Decoupling capacitor for VINTF rail, which is pullup voltage for the digital lines. This decoupling should be placed near the device to have good signal integrity.
5. OCP-I resistors, FREQ_P resistors, SLEWA resistors, and RAMP resistors

10.1.7 Grounding Recommendations

The TPS53632 device has an analog ground and a thermal pad. The usual procedure for connecting these is:

- Keep the analog GND of the device and the power GND of the power circuit separate. The device analog GND and the power circuit power GND can be connected at one single quiet point in the layout.
- The thermal pad does not have an electrical connection to device. But the thermal pad must be connected to GND pin (pin 29) of the device to give good ground shielding. Do not connect the thermal pad to system GND.
- Tie the thermal pad to a ground island with at least 4 vias. All the analog components can connect to this analog ground island.
- The analog ground can be connected to any quiet spot on the system ground. A quiet spot is defined as a spot where no power supply switching currents are likely to flow. Use a single point connection from analog ground to the system ground.
- Ensure that the low-side MOSFET source connection and the input decoupling capacitors have a sufficient number of vias.

10.1.8 Decoupling Recommendations

- Decouple V5A and VDD to GND with a ceramic capacitor (with a value of at least 1 µF) .
- Decouple VINTF to GND with a capacitor (with a value of at least 0.1 µF) to GND.

10.1.9 Conductor Widths

- Follow TI guidelines with respect to the voltage feedback and logic interface connection requirements.
- Maximize the widths of power, ground, and drive signal connections.
- For conductors in the power path, be sure there is adequate trace width for the amount of current flowing through the traces.
- Make sure there are sufficient vias for connections between layers. Use 1 via minimum per ampere of current.

Copyright © 2014, Texas Instruments Incorporated

10.2 Layout Example

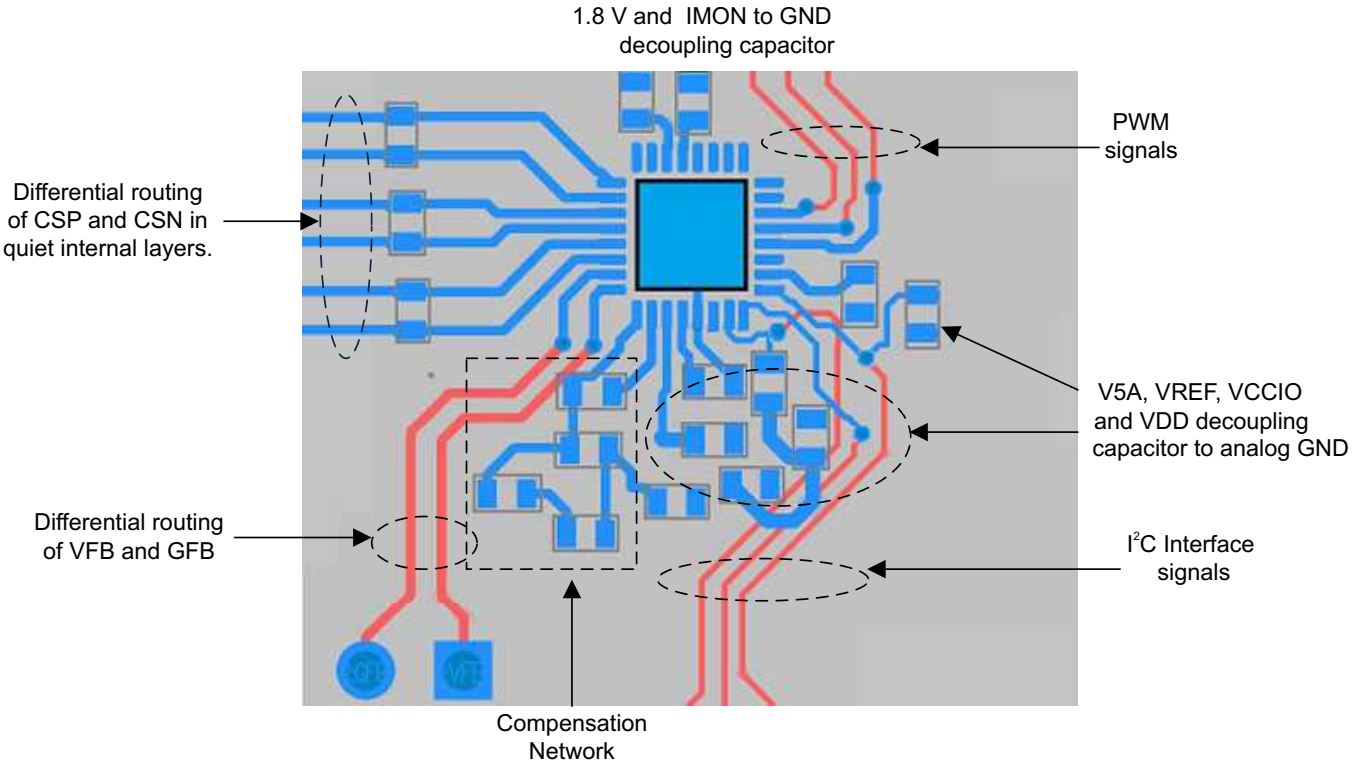

Figure 31. Example Layout

11 Device and Documentation Support

11.1 Trademarks

D-CAP+, AutoBalance are trademarks of Texas Instruments.
Excel is a registered trademark of Microsoft Corporation.
All other trademarks are the property of their respective owners.

11.2 Electrostatic Discharge Caution

These devices have limited built-in ESD protection. The leads should be shorted together or the device placed in conductive foam during storage or handling to prevent electrostatic damage to the MOS gates.

11.3 Glossary

SLYZ022 — *TI Glossary*.

This glossary lists and explains terms, acronyms, and definitions.

12 Mechanical, Packaging, and Orderable Information

The following pages include mechanical packaging and orderable information. This information is the most current data available for the designated devices. This data is subject to change without notice and revision of this document. For browser-based versions of this data sheet, refer to the left-hand navigation.

PACKAGING INFORMATION

Orderable part number	Status (1)	Material type (2)	Package | Pins	Package qty | Carrier	RoHS (3)	Lead finish/ Ball material (4)	MSL rating/ Peak reflow (5)	Op temp (°C)	Part marking (6)
TPS53632RSMR	Active	Production	VQFN (RSM) | 32	3000 | LARGE T&R	Yes	NIPDAU	Level-1-260C-UNLIM	-10 to 105	TPS 53632
TPS53632RSMR.A	Active	Production	VQFN (RSM) | 32	3000 | LARGE T&R	Yes	NIPDAU	Level-1-260C-UNLIM	-10 to 105	TPS 53632
TPS53632RSMT	Active	Production	VQFN (RSM) | 32	250 | SMALL T&R	Yes	NIPDAU	Level-1-260C-UNLIM	-10 to 105	TPS 53632
TPS53632RSMT.A	Active	Production	VQFN (RSM) | 32	250 | SMALL T&R	Yes	NIPDAU	Level-1-260C-UNLIM	-10 to 105	TPS 53632

(1) **Status:** For more details on status, see our product life cycle.

(2) **Material type:** When designated, preproduction parts are prototypes/experimental devices, and are not yet approved or released for full production. Testing and final process, including without limitation quality assurance, reliability performance testing, and/or process qualification, may not yet be complete, and this item is subject to further changes or possible discontinuation. If available for ordering, purchases will be subject to an additional waiver at checkout, and are intended for early internal evaluation purposes only. These items are sold without warranties of any kind.

(3) **RoHS values:** Yes, No, RoHS Exempt. See the TI RoHS Statement for additional information and value definition.

(4) **Lead finish/Ball material:** Parts may have multiple material finish options. Finish options are separated by a vertical ruled line. Lead finish/Ball material values may wrap to two lines if the finish value exceeds the maximum column width.

(5) **MSL rating/Peak reflow:** The moisture sensitivity level ratings and peak solder (reflow) temperatures. In the event that a part has multiple moisture sensitivity ratings, only the lowest level per JEDEC standards is shown. Refer to the shipping label for the actual reflow temperature that will be used to mount the part to the printed circuit board.

(6) **Part marking:** There may be an additional marking, which relates to the logo, the lot trace code information, or the environmental category of the part.

Multiple part markings will be inside parentheses. Only one part marking contained in parentheses and separated by a "~" will appear on a part. If a line is indented then it is a continuation of the previous line and the two combined represent the entire part marking for that device.

Important Information and Disclaimer: The information provided on this page represents TI's knowledge and belief as of the date that it is provided. TI bases its knowledge and belief on information provided by third parties, and makes no representation or warranty as to the accuracy of such information. Efforts are underway to better integrate information from third parties. TI has taken and continues to take reasonable steps to provide representative and accurate information but may not have conducted destructive testing or chemical analysis on incoming materials and chemicals. TI and TI suppliers consider certain information to be proprietary, and thus CAS numbers and other limited information may not be available for release.

In no event shall TI's liability arising out of such information exceed the total purchase price of the TI part(s) at issue in this document sold by TI to Customer on an annual basis.

TAPE AND REEL INFORMATION

REEL DIMENSIONS

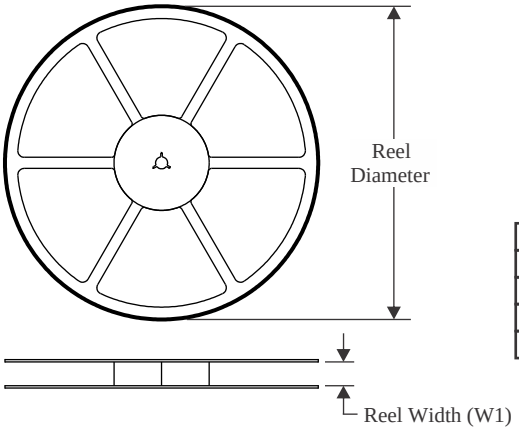

TAPE DIMENSIONS

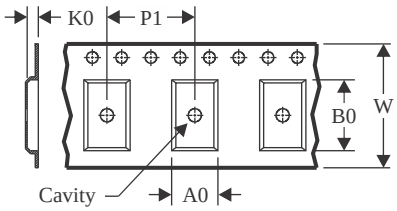

A0	Dimension designed to accommodate the component width
B0	Dimension designed to accommodate the component length
K0	Dimension designed to accommodate the component thickness
W	Overall width of the carrier tape
P1	Pitch between successive cavity centers

QUADRANT ASSIGNMENTS FOR PIN 1 ORIENTATION IN TAPE

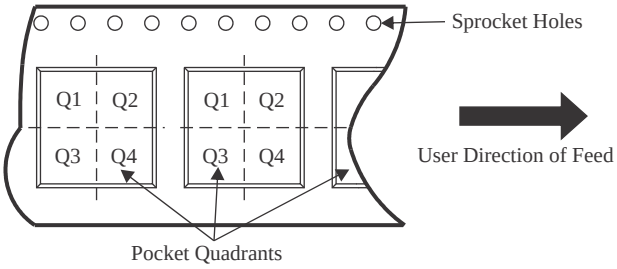

*All dimensions are nominal

Device	Package Type	Package Drawing	Pins	SPQ	Reel Diameter (mm)	Reel Width W1 (mm)	A0 (mm)	B0 (mm)	K0 (mm)	P1 (mm)	W (mm)	Pin1 Quadrant
TPS53632RSMR	VQFN	RSM	32	3000	330.0	12.4	4.25	4.25	1.15	8.0	12.0	Q2
TPS53632RSMT	VQFN	RSM	32	250	180.0	12.4	4.25	4.25	1.15	8.0	12.0	Q2

TAPE AND REEL BOX DIMENSIONS

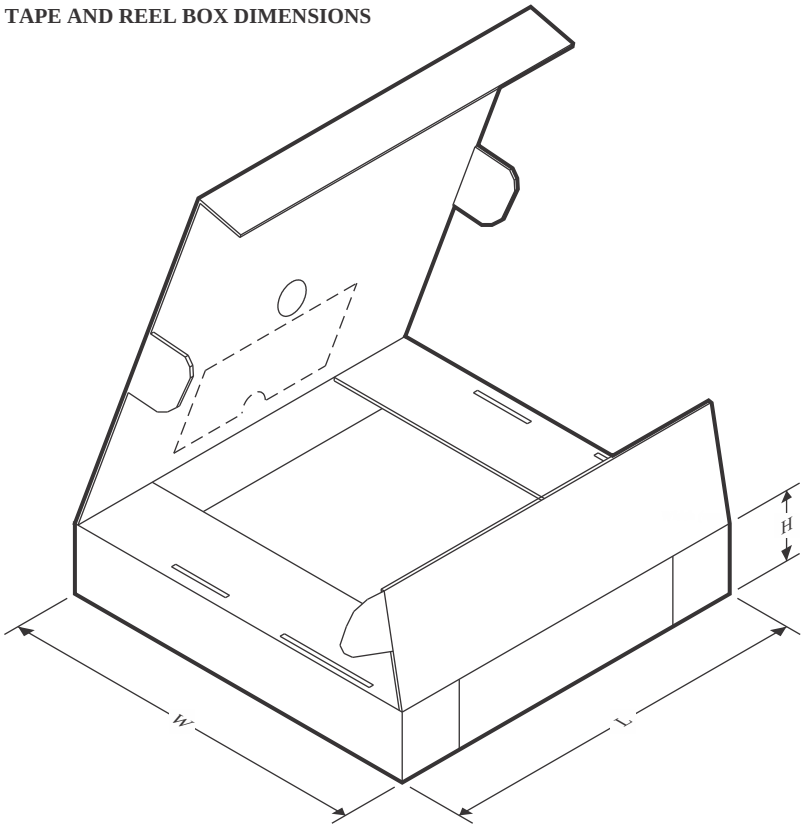

*All dimensions are nominal

Device	Package Type	Package Drawing	Pins	SPQ	Length (mm)	Width (mm)	Height (mm)
TPS53632RSMR	VQFN	RSM	32	3000	346.0	346.0	33.0
TPS53632RSMT	VQFN	RSM	32	250	182.0	182.0	20.0

GENERIC PACKAGE VIEW

RSM 32

VQFN - 1 mm max height

4 x 4, 0.4 mm pitch

PLASTIC QUAD FLATPACK - NO LEAD

This image is a representation of the package family, actual package may vary.
Refer to the product data sheet for package details.

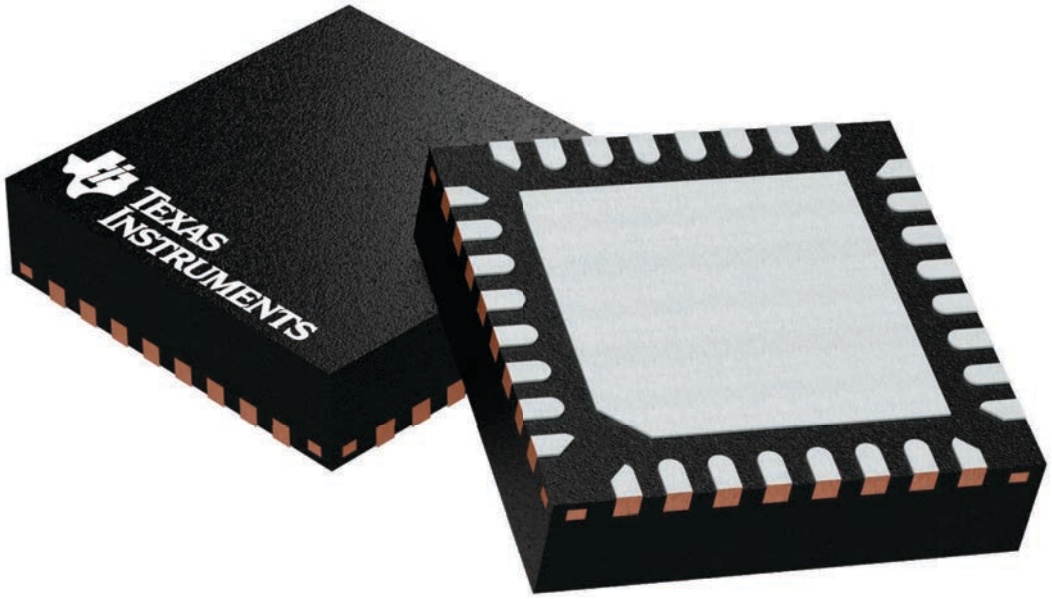

4224982/A

RSM0032B

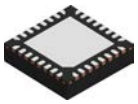

PACKAGE OUTLINE

VQFN - 1 mm max height

PLASTIC QUAD FLATPACK - NO LEAD

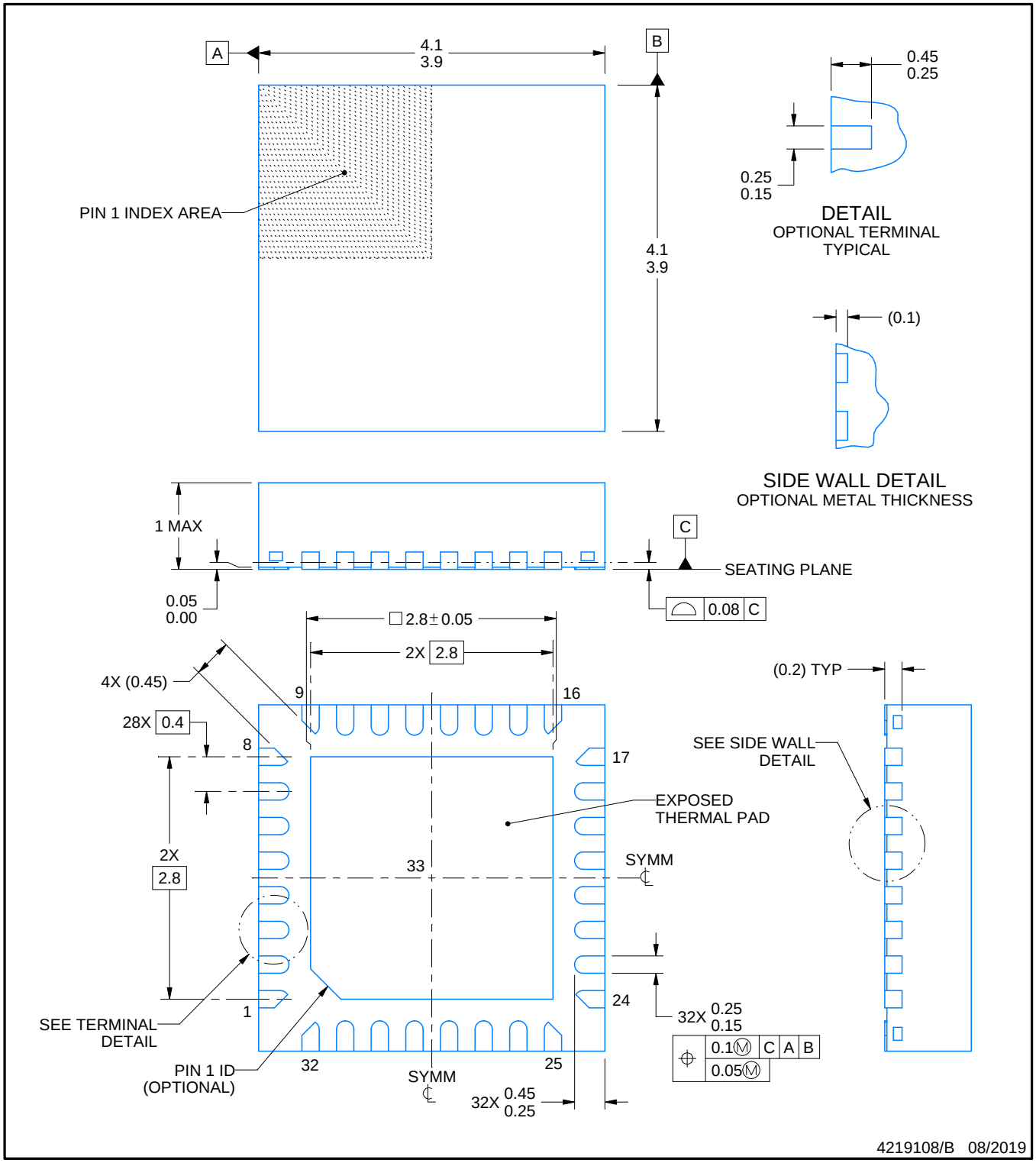

NOTES:

1. All linear dimensions are in millimeters. Any dimensions in parenthesis are for reference only. Dimensioning and tolerancing per ASME Y14.5M.
2. This drawing is subject to change without notice.
3. The package thermal pad must be soldered to the printed circuit board for thermal and mechanical performance.

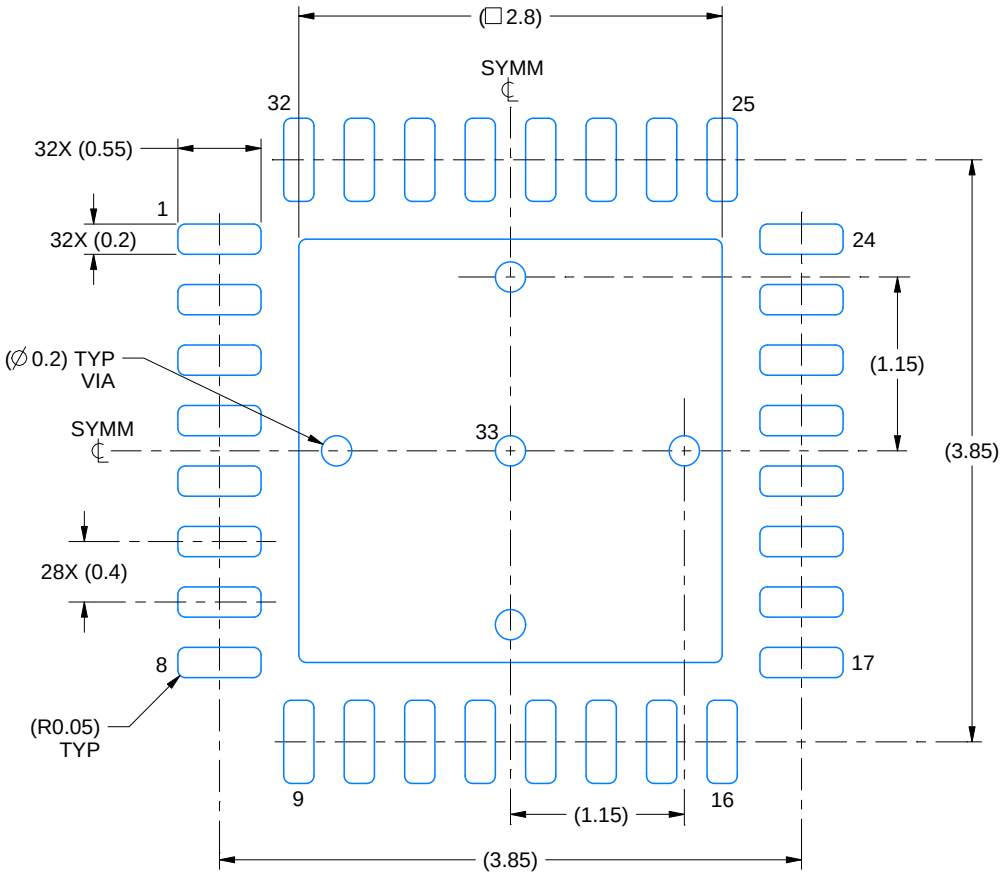

LAND PATTERN EXAMPLE
EXPOSED METAL SHOWN
SCALE:20X

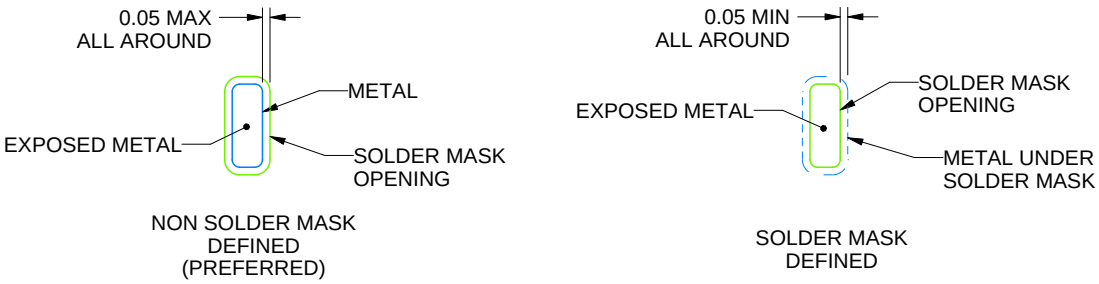

SOLDER MASK DETAILS

4219108/B 08/2019

NOTES: (continued)

4. This package is designed to be soldered to a thermal pad on the board. For more information, see Texas Instruments literature number SLUA271 (www.ti.com/lit/slua271).
5. Vias are optional depending on application, refer to device data sheet. If any vias are implemented, refer to their locations shown on this view. It is recommended that vias under paste be filled, plugged or tented.

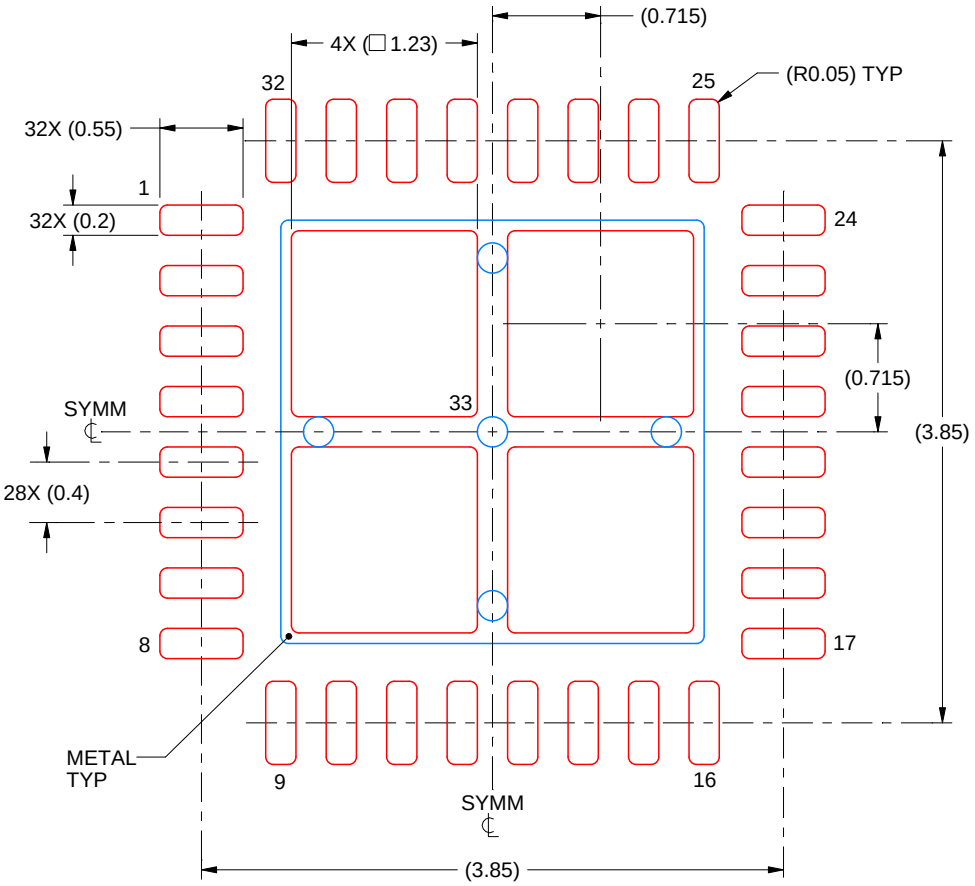

SOLDER PASTE EXAMPLE
BASED ON 0.1 mm THICK STENCIL

EXPOSED PAD 33:
77% PRINTED SOLDER COVERAGE BY AREA UNDER PACKAGE
SCALE:20X

4219108/B 08/2019

NOTES: (continued)

6. Laser cutting apertures with trapezoidal walls and rounded corners may offer better paste release. IPC-7525 may have alternate design recommendations.

IMPORTANT NOTICE AND DISCLAIMER

TI PROVIDES TECHNICAL AND RELIABILITY DATA (INCLUDING DATA SHEETS), DESIGN RESOURCES (INCLUDING REFERENCE DESIGNS), APPLICATION OR OTHER DESIGN ADVICE, WEB TOOLS, SAFETY INFORMATION, AND OTHER RESOURCES “AS IS” AND WITH ALL FAULTS, AND DISCLAIMS ALL WARRANTIES, EXPRESS AND IMPLIED, INCLUDING WITHOUT LIMITATION ANY IMPLIED WARRANTIES OF MERCHANTABILITY, FITNESS FOR A PARTICULAR PURPOSE OR NON-INFRINGEMENT OF THIRD PARTY INTELLECTUAL PROPERTY RIGHTS.

These resources are intended for skilled developers designing with TI products. You are solely responsible for (1) selecting the appropriate TI products for your application, (2) designing, validating and testing your application, and (3) ensuring your application meets applicable standards, and any other safety, security, regulatory or other requirements.

These resources are subject to change without notice. TI grants you permission to use these resources only for development of an application that uses the TI products described in the resource. Other reproduction and display of these resources is prohibited. No license is granted to any other TI intellectual property right or to any third party intellectual property right. TI disclaims responsibility for, and you will fully indemnify TI and its representatives against, any claims, damages, costs, losses, and liabilities arising out of your use of these resources.

TI’s products are provided subject to TI’s Terms of Sale or other applicable terms available either on ti.com or provided in conjunction with such TI products. TI’s provision of these resources does not expand or otherwise alter TI’s applicable warranties or warranty disclaimers for TI products.

TI objects to and rejects any additional or different terms you may have proposed.

Mailing Address: Texas Instruments, Post Office Box 655303, Dallas, Texas 75265
Copyright © 2025, Texas Instruments Incorporated