TEXAS INSTRUMENTS
Data sheet acquired from Harris Semiconductor
SCHS049C − Revised October 2003

# CD4060B Types

## CMOS 14-Stage Ripple-Carry Binary Counter/Divider and Oscillator

### High-Voltage Types (20-Volt Rating)

■CD4060B consists of an oscillator section and 14 ripple-carry binary counter stages. The oscillator configuration allows design of either RC or crystal oscillator circuits. A RESET input is provided which resets the counter to the all-O's state and disables the oscillator. A high level on the RESET line accomplishes the reset function. All counter stages are master-slave flip-flops. The state of the counter is advanced one step in binary order on the negative transition of $\phi_I$ (and $\phi_O$). All inputs and outputs are fully buffered. Schmitt trigger action on the input-pulse line permits unlimited input-pulse rise and fall times.

The CD4060B-series types are supplied in 16-lead hermetic dual-in-line ceramic packages (F3A suffix), 16-lead dual-in-line plastic packages (E suffix), 16-lead small-outline packages (M, M96, MT, and NSR suffixes), and 16-lead thin shrink small-outline packages (PW and PWR suffixes).

*Features:*

- 12 MHz clock rate at 15 V
- Common reset
- Fully static operation
- Buffered inputs and outputs
- Schmitt trigger input-pulse line
- 100% tested for quiescent current at 20 V
- Standardized, symmetrical output characteristics
- 5-V, 10-V, and 15-V parametric ratings
- Meets all requirements of JEDEC Tentative Standard No. 13B, "Standard Specifications for description of "B" Series CMOS Devices"

*Oscillator Features:*

- All active components on chip
- RC or crystal oscillator configuration
- RC oscillator frequency of 690 kHz min. at 15 V

*Applications*

- Control counters
- Timers
- Frequency dividers
- Time-delay circuits

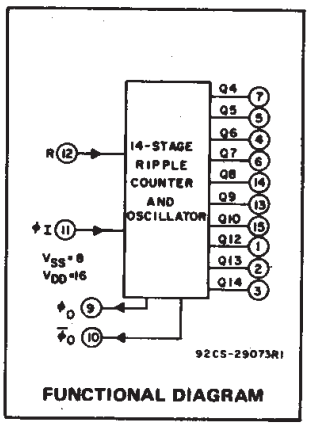


FUNCTIONAL DIAGRAM

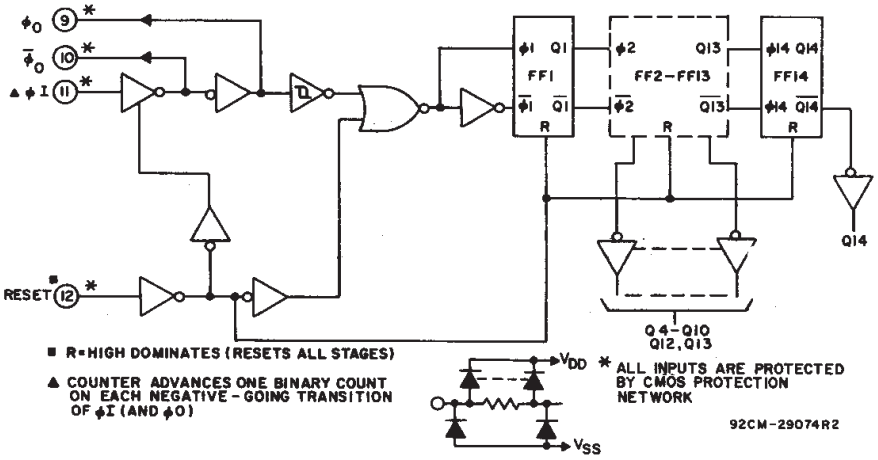


*Fig. 1 – Logic diagram.*

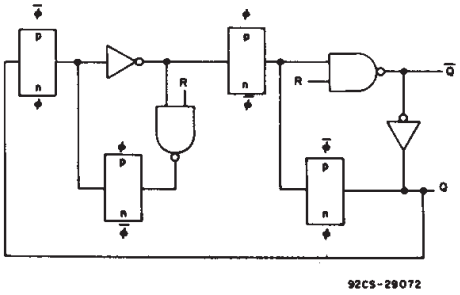


*Fig. 2 – Detail of typical flip-flop stage.*

**MAXIMUM RATINGS,** *Absolute-Maximum Values:*

DC SUPPLY-VOLTAGE RANGE, ($V_{DD}$)
Voltages referenced to $V_{SS}$ Terminal) ..... −0.5V to +20V
INPUT VOLTAGE RANGE, ALL INPUTS ..... −0.5V to $V_{DD}$ +0.5V
DC INPUT CURRENT, ANY ONE INPUT ..... ±10mA
POWER DISSIPATION PER PACKAGE ($P_D$):
For $T_A$ = −55°C to +100°C ..... 500mW
For $T_A$ = +100°C to +125°C ..... Derate Linearity at 12mW/°C to 200mW
DEVICE DISSIPATION PER OUTPUT TRANSISTOR
FOR $T_A$ = FULL PACKAGE-TEMPERATURE RANGE (All Package Types) ..... 100mW
OPERATING-TEMPERATURE RANGE ($T_A$) ..... −55°C to +125°C
STORAGE TEMPERATURE RANGE ($T_{stg}$) ..... −65°C to +150°C
LEAD TEMPERATURE (DURING SOLDERING):
At distance 1/16 ± 1/32 inch (1.59 ± 0.79mm) from case for 10s max ..... +265°C

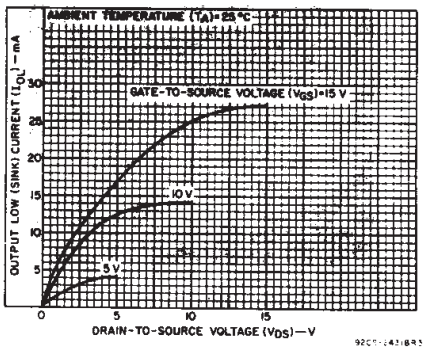


*Fig. 3 – Typical n-channel output low (sink) current characteristics.*

Copyright © 2003, Texas Instruments Incorporated

## STATIC ELECTRICAL CHARACTERISTICS

| CHARACTERISTIC | CONDITIONS $V_O$ (V) | $V_{IN}$ (V) | $V_{DD}$ (V) | LIMITS AT INDICATED TEMPERATURES (°C) −55 | −40 | +85 | +125 | +25 Min. | +25 Typ. | +25 Max. | UNITS |
|---|---|---|---|---|---|---|---|---|---|---|---|
| Quiescent Device Current, $I_{DD}$ Max. | – | 0,5 | 5 | 5 | 5 | 150 | 150 | – | 0.04 | 5 | μA |
| | – | 0,10 | 10 | 10 | 10 | 300 | 300 | – | 0.04 | 10 | |
| | – | 0,15 | 15 | 20 | 20 | 600 | 600 | – | 0.04 | 20 | |
| | – | 0,20 | 20 | 100 | 100 | 3000 | 3000 | – | 0.08 | 100 | |
| Output Low (Sink) Current*, $I_{OL}$ Min. | 0.4 | 0,5 | 5 | 0.64 | 0.61 | 0.42 | 0.36 | 0.51 | 1 | – | mA |
| | 0.5 | 0,10 | 10 | 1.6 | 1.5 | 1.1 | 0.9 | 1.3 | 2.6 | – | |
| | 1.5 | 0,15 | 15 | 4.2 | 4 | 2.8 | 2.4 | 3.4 | 6.8 | – | |
| Output High (Source) Current*, $I_{OH}$ Min. | 4.6 | 0,5 | 5 | −0.64 | −0.61 | −0.42 | −0.36 | −0.51 | −1 | – | |
| | 2.5 | 0,5 | 5 | −2 | −1.8 | −1.3 | −1.15 | −1.6 | −3.2 | – | |
| | 9.5 | 0,10 | 10 | −1.6 | −1.5 | −1.1 | −0.9 | −1.3 | −2.6 | – | |
| | 13.5 | 0,15 | 15 | −4.2 | −4 | −2.8 | −2.4 | −3.4 | −6.8 | – | |
| Output Voltage: Low-Level, $V_{OL}$ Max. | – | 0,5 | 5 | 0.05 | | | | – | 0 | 0.05 | V |
| | – | 0,10 | 10 | 0.05 | | | | – | 0 | 0.05 | |
| | – | 0,15 | 15 | 0.05 | | | | – | 0 | 0.05 | |
| Output Voltage: High-Level, $V_{OH}$ Min. | – | 0,5 | 5 | 4.95 | | | | 4.95 | 5 | – | |
| | – | 0,10 | 10 | 9.95 | | | | 9.95 | 10 | – | |
| | – | 0,15 | 15 | 14.95 | | | | 14.95 | 15 | – | |
| Input Low Voltage $V_{IL}$ Max. | 0.5,4.5 | – | 5 | 1.5 | | | | – | – | 1.5 | V |
| | 1,9 | – | 10 | 3 | | | | – | – | 3 | |
| | 1.5,13.5 | – | 15 | 4 | | | | – | – | 4 | |
| Input High Voltage, $V_{IH}$ Min. | 0.5,4.5 | – | 5 | 3.5 | | | | 3.5 | – | – | |
| | 1,9 | – | 10 | 7 | | | | 7 | – | – | |
| | 1.5,13.5 | – | 15 | 11 | | | | 11 | – | – | |
| Input Current $I_{IN}$ Max. | – | 0,18 | 18 | ±0.1 | ±0.1 | ±1 | ±1 | – | $\pm 10^{-5}$ | ±0.1 | μA |

* Data not applicable to terminal 9 or 10.

## RECOMMENDED OPERATING CONDITIONS

*For maximum reliability, nominal operating conditions should be selected so that operation is always within the following ranges*

| CHARACTERISTIC | $V_{DD}$ | LIMITS MIN. | LIMITS MAX. | UNITS |
|---|---|---|---|---|
| Supply-Voltage Range (For $T_A$ = Full Package Temperature Range) | – | 3 | 18 | V |
| Input-Pulse Width, $t_W$ (f = 100 kHz) | 5 | 100 | – | ns |
| | 10 | 40 | – | |
| | 15 | 30 | – | |
| Input-Pulse Rise Time and Fall Time, $t_{r\phi}$, $t_{f\phi}$ | 5 | Unlimited | | |
| | 10 | | | |
| | 15 | | | |
| Input-Pulse Frequency, $f_{\phi I}$ (External pulse source) | 5 | – | 3.5 | MHz |
| | 10 | – | 8 | |
| | 15 | – | 12 | |
| Reset Pulse Width, $t_W$ | 5 | 120 | – | ns |
| | 10 | 60 | – | |
| | 15 | 40 | – | |

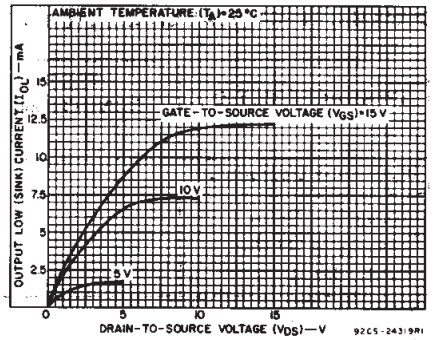


*Fig. 4 – Minimum n-channel output low (sink) current characteristics.*

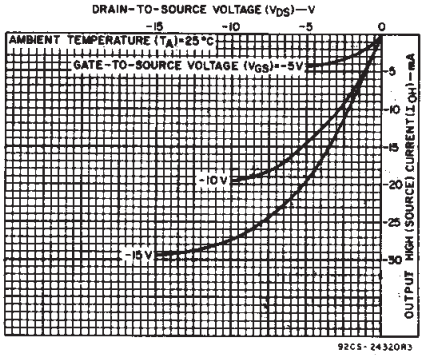


*Fig. 5 – Typical p-channel output high (source) current characteristics.*

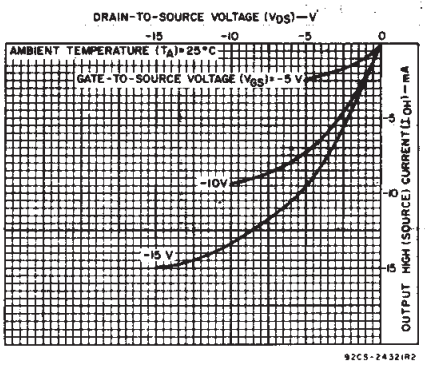


*Fig. 6 – Minimum p-channel output high (source) current characteristics.*

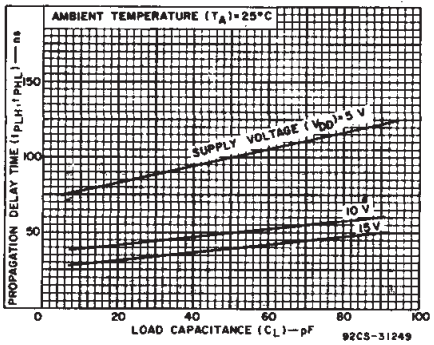


*Fig. 7 – Typical propagation delay time ($Q_n$ to $Q_n$+1) as a function of load capacitance.*

**DYNAMIC ELECTRICAL CHARACTERISTICS at $T_A$ = 25°C, Input $t_r$, $t_f$ = 20 ns, $C_L$ = 50 pF, $R_L$ = 200 kΩ**

| CHARACTERISTIC | TEST CONDITIONS | $V_{DD}$ (V) | LIMITS MIN. | LIMITS TYP. | LIMITS MAX. | UNITS |
|---|---|---|---|---|---|---|
| **Input-Pulse Operation** | | | | | | |
| Propagation Delay Time, $\phi_I$ to Q4 Out; $t_{PHL}$, $t_{PLH}$ | | 5 | – | 370 | 740 | ns |
| | | 10 | – | 150 | 300 | |
| | | 15 | – | 100 | 200 | |
| Propagation Delay Time, $Q_n$ to $Q_{n+1}$; $t_{PHL}$, $t_{PLH}$ | | 5 | – | 100 | 200 | |
| | | 10 | – | 50 | 100 | |
| | | 15 | – | 40 | 80 | |
| Transition Time, $t_{THL}$, $t_{TLH}$ | | 5 | – | 100 | 200 | |
| | | 10 | – | 50 | 100 | |
| | | 15 | – | 40 | 80 | |
| Min. Input-Pulse Width, $t_W$ | f = 100 kHz | 5 | – | 50 | 100 | |
| | | 10 | – | 20 | 40 | |
| | | 15 | – | 15 | 30 | |
| Input-Pulse Rise & Fall Time, $t_{r\phi}$, $t_{f\phi}$ | | 5 | Unlimited | | | |
| | | 10 | | | | |
| | | 15 | | | | |
| Max. Input-Pulse Frequency, $f_{\phi I}$ (External pulse source) | | 5 | 3.5 | 7 | – | MHz |
| | | 10 | 8 | 16 | – | |
| | | 15 | 12 | 24 | – | |
| Input Capacitance, $C_I$ | Any Input | | – | 5 | 7.5 | pF |
| **Reset Operation** | | | | | | |
| Propagation Delay Time, $t_{PHL}$ | | 5 | – | 180 | 360 | ns |
| | | 10 | – | 80 | 160 | |
| | | 15 | – | 50 | 100 | |
| Minimum Reset Pulse Width, $t_W$ | | 5 | – | 60 | 120 | |
| | | 10 | – | 30 | 60 | |
| | | 15 | – | 20 | 40 | |

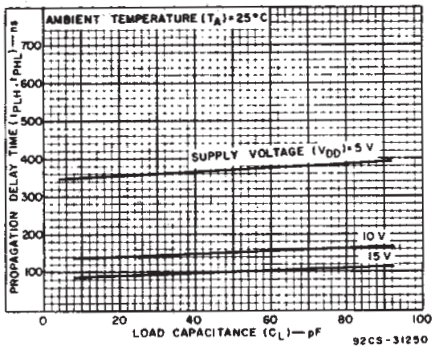


*Fig. 8 – Typical propagation delay time ($\phi_I$ to $Q_4$ Output) as a function of load capacitance.*

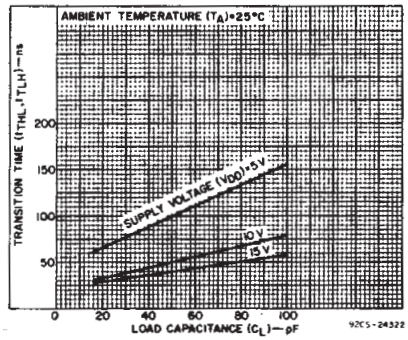


*Fig. 9 – Typical transition time as a function of load capacitance.*

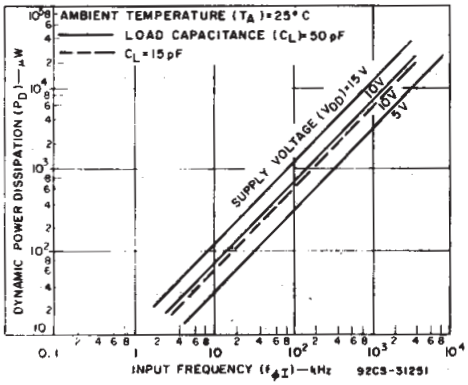


*Fig. 10 – Typical dynamic power dissipation as a function of input frequency.*

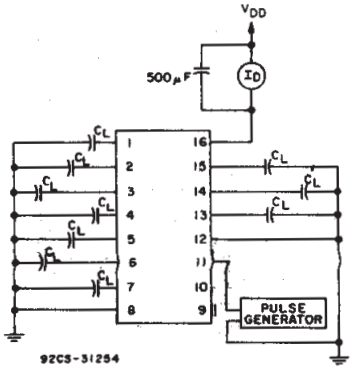


*Fig. 11 – Dynamic power dissipation test circuit.*

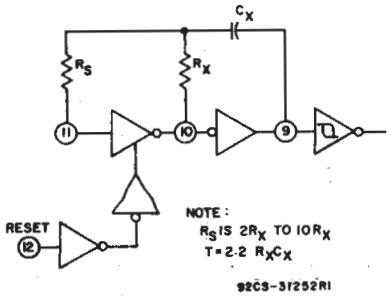


*Fig. 12 – Typical RC circuit.*

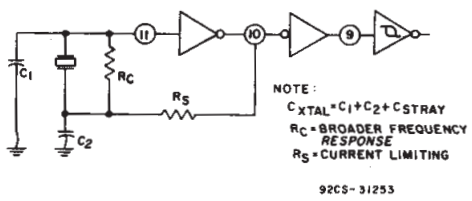


*Fig. 13 – Typical crystal circuit.*

**DYNAMIC ELECTRICAL CHARACTERISTICS at $T_A = 25^oC$, Input $t_r$, $t_f$ = 20 ns, $C_L$ = 50 pF, $R_L$ = 200 kΩ [cont'd]**

| CHARACTERISTIC | TEST CONDITIONS | $V_{DD}$ (V) | LIMITS Min. | Typ. | Max. | UNITS |
|---|---|---|---|---|---|---|
| **RC Operation** | | | | | | |
| Variation of Frequency (Unit-to-Unit) | $C_X$ = 200 pF, $R_S$ = 560 kΩ, $R_X$ = 50 kΩ | 5 | — | 23±10% | — | kHz |
| | | 10 | — | 24±10% | — | |
| | | 15 | — | 25±10% | — | |
| Variation of Frequency with voltage change (Same Unit) | $C_X$ = 200 pF, $R_S$ = 560 kΩ, $R_X$ = 50 kΩ | 5V to 10 V | — | 1.5 | — | |
| | | 10V to 15V | — | 0.5 | — | |
| $R_X$ max. | $C_X$ = 10 μF | 5 | — | — | 20 | MΩ |
| | = 50 μF | 10 | — | — | 20 | |
| | = 10 μF | 15 | — | — | 10 | |
| $C_X$ max. | $R_X$ = 500 kΩ | 5 | — | — | 1000 | μF |
| | = 300 kΩ | 10 | — | — | 50 | |
| | = 300 kΩ | 15 | — | — | 50 | |
| Maximum Oscillator Frequency* | $R_X$ = 5 kΩ, $R_S$ = 30 kΩ, $C_X$ = 15 pF | 10 | 530 | 650 | 810 | kHz |
| | | 15 | 690 | 800 | 940 | |
| Drive Current at Pin 9 (For Oscillator Design) $I_{OL}$ | $V_O$ = 0.4 V | 5 | 0.16 | 0.35 | — | mA |
| | = 0.5 V | 10 | 0.42 | 0.8 | — | |
| | = 1.5 V | 15 | 1 | 2 | — | |
| $I_{OH}$ | $V_O$ = 4.6 V | 5 | -0.16 | -0.35 | — | |
| | = 9.5 V | 10 | -0.42 | -0.8 | — | |
| | = 13.5 V | 15 | -1 | -2 | — | |

*RC oscillator applications are not recommended at supply voltages below 7 V for $R_X$ < 50 kΩ.

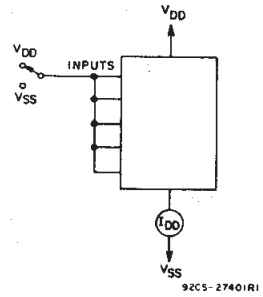


*Fig. 14 – Quiescent device current.*

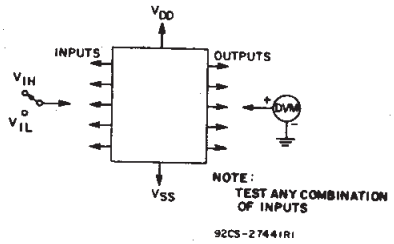


*Fig. 15 – Input voltage.*

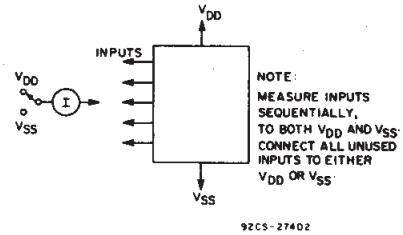


*Fig. 16 – Input current.*

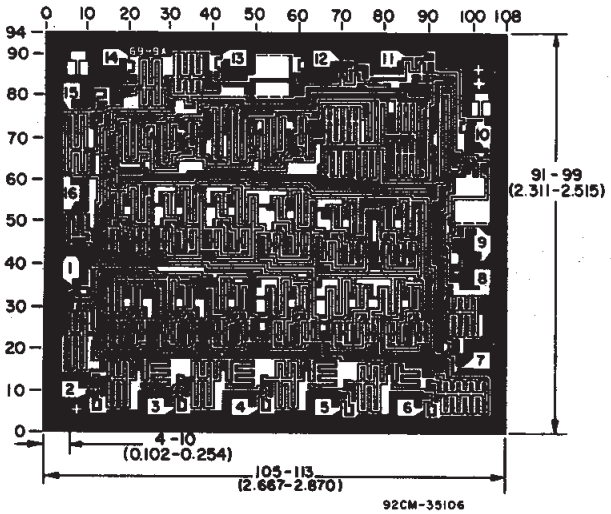


*Chip dimensions and pad layout for CD4060B*

**TERMINAL DIAGRAM**

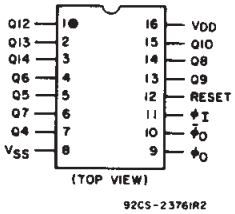


*Dimensions in parentheses are in millimeters and are derived from the basic inch dimensions as indicated. Grid graduations are in mils ($10^{-3}$ inch).*

## PACKAGING INFORMATION

| Orderable Device | Status [1] | Package Type | Package Drawing | Pins | Package Qty | Eco Plan [2] | Lead/Ball Finish | MSL Peak Temp [3] |
|---|---|---|---|---|---|---|---|---|
| CD4060BE | ACTIVE | PDIP | N | 16 | 25 | Pb-Free (RoHS) | CU NIPDAU | N / A for Pkg Type |
| CD4060BEE4 | ACTIVE | PDIP | N | 16 | 25 | Pb-Free (RoHS) | CU NIPDAU | N / A for Pkg Type |
| CD4060BF | ACTIVE | CDIP | J | 16 | 1 | TBD | A42 | N / A for Pkg Type |
| CD4060BF3A | ACTIVE | CDIP | J | 16 | 1 | TBD | A42 | N / A for Pkg Type |
| CD4060BF3AS2534 | OBSOLETE | CDIP | J | 16 | | TBD | Call TI | Call TI |
| CD4060BM | ACTIVE | SOIC | D | 16 | 40 | Green (RoHS & no Sb/Br) | CU NIPDAU | Level-1-260C-UNLIM |
| CD4060BM96 | ACTIVE | SOIC | D | 16 | 2500 | Green (RoHS & no Sb/Br) | CU NIPDAU | Level-1-260C-UNLIM |
| CD4060BM96E4 | ACTIVE | SOIC | D | 16 | 2500 | Green (RoHS & no Sb/Br) | CU NIPDAU | Level-1-260C-UNLIM |
| CD4060BM96G4 | ACTIVE | SOIC | D | 16 | 2500 | Green (RoHS & no Sb/Br) | CU NIPDAU | Level-1-260C-UNLIM |
| CD4060BME4 | ACTIVE | SOIC | D | 16 | 40 | Green (RoHS & no Sb/Br) | CU NIPDAU | Level-1-260C-UNLIM |
| CD4060BMG4 | ACTIVE | SOIC | D | 16 | 40 | Green (RoHS & no Sb/Br) | CU NIPDAU | Level-1-260C-UNLIM |
| CD4060BMT | ACTIVE | SOIC | D | 16 | 250 | Green (RoHS & no Sb/Br) | CU NIPDAU | Level-1-260C-UNLIM |
| CD4060BMTE4 | ACTIVE | SOIC | D | 16 | 250 | Green (RoHS & no Sb/Br) | CU NIPDAU | Level-1-260C-UNLIM |
| CD4060BMTG4 | ACTIVE | SOIC | D | 16 | 250 | Green (RoHS & no Sb/Br) | CU NIPDAU | Level-1-260C-UNLIM |
| CD4060BNSR | ACTIVE | SO | NS | 16 | 2000 | Green (RoHS & no Sb/Br) | CU NIPDAU | Level-1-260C-UNLIM |
| CD4060BNSRE4 | ACTIVE | SO | NS | 16 | 2000 | Green (RoHS & no Sb/Br) | CU NIPDAU | Level-1-260C-UNLIM |
| CD4060BNSRG4 | ACTIVE | SO | NS | 16 | 2000 | Green (RoHS & no Sb/Br) | CU NIPDAU | Level-1-260C-UNLIM |
| CD4060BPW | ACTIVE | TSSOP | PW | 16 | 90 | Green (RoHS & no Sb/Br) | CU NIPDAU | Level-1-260C-UNLIM |
| CD4060BPWE4 | ACTIVE | TSSOP | PW | 16 | 90 | Green (RoHS & no Sb/Br) | CU NIPDAU | Level-1-260C-UNLIM |
| CD4060BPWG4 | ACTIVE | TSSOP | PW | 16 | 90 | Green (RoHS & no Sb/Br) | CU NIPDAU | Level-1-260C-UNLIM |
| CD4060BPWR | ACTIVE | TSSOP | PW | 16 | 2000 | Green (RoHS & no Sb/Br) | CU NIPDAU | Level-1-260C-UNLIM |
| CD4060BPWRE4 | ACTIVE | TSSOP | PW | 16 | 2000 | Green (RoHS & no Sb/Br) | CU NIPDAU | Level-1-260C-UNLIM |
| CD4060BPWRG4 | ACTIVE | TSSOP | PW | 16 | 2000 | Green (RoHS & no Sb/Br) | CU NIPDAU | Level-1-260C-UNLIM |

[1] The marketing status values are defined as follows:
**ACTIVE:** Product device recommended for new designs.
**LIFEBUY:** TI has announced that the device will be discontinued, and a lifetime-buy period is in effect.
**NRND:** Not recommended for new designs. Device is in production to support existing customers, but TI does not recommend using this part in a new design.
**PREVIEW:** Device has been announced but is not in production. Samples may or may not be available.

**OBSOLETE:** TI has discontinued the production of the device.

(2) Eco Plan - The planned eco-friendly classification: Pb-Free (RoHS), Pb-Free (RoHS Exempt), or Green (RoHS & no Sb/Br) - please check http://www.ti.com/productcontent for the latest availability information and additional product content details.
**TBD:** The Pb-Free/Green conversion plan has not been defined.
**Pb-Free (RoHS):** TI's terms "Lead-Free" or "Pb-Free" mean semiconductor products that are compatible with the current RoHS requirements for all 6 substances, including the requirement that lead not exceed 0.1% by weight in homogeneous materials. Where designed to be soldered at high temperatures, TI Pb-Free products are suitable for use in specified lead-free processes.
**Pb-Free (RoHS Exempt):** This component has a RoHS exemption for either 1) lead-based flip-chip solder bumps used between the die and package, or 2) lead-based die adhesive used between the die and leadframe. The component is otherwise considered Pb-Free (RoHS compatible) as defined above.
**Green (RoHS & no Sb/Br):** TI defines "Green" to mean Pb-Free (RoHS compatible), and free of Bromine (Br) and Antimony (Sb) based flame retardants (Br or Sb do not exceed 0.1% by weight in homogeneous material)

(3) MSL, Peak Temp. -- The Moisture Sensitivity Level rating according to the JEDEC industry standard classifications, and peak solder temperature.

**Important Information and Disclaimer:**The information provided on this page represents TI's knowledge and belief as of the date that it is provided. TI bases its knowledge and belief on information provided by third parties, and makes no representation or warranty as to the accuracy of such information. Efforts are underway to better integrate information from third parties. TI has taken and continues to take reasonable steps to provide representative and accurate information but may not have conducted destructive testing or chemical analysis on incoming materials and chemicals. TI and TI suppliers consider certain information to be proprietary, and thus CAS numbers and other limited information may not be available for release.

In no event shall TI's liability arising out of such information exceed the total purchase price of the TI part(s) at issue in this document sold by TI to Customer on an annual basis.

## TAPE AND REEL INFORMATION

**REEL DIMENSIONS**

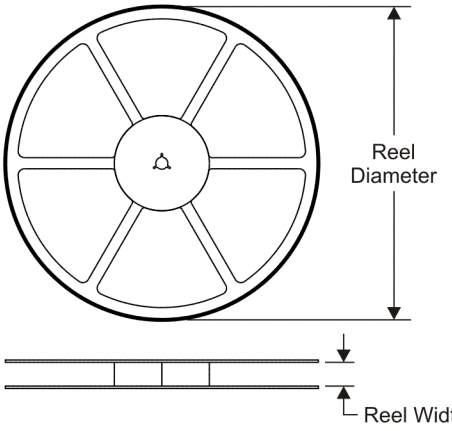


**TAPE DIMENSIONS**

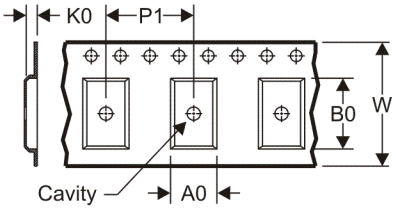


| | |
|---|---|
| A0 | Dimension designed to accommodate the component width |
| B0 | Dimension designed to accommodate the component length |
| K0 | Dimension designed to accommodate the component thickness |
| W | Overall width of the carrier tape |
| P1 | Pitch between successive cavity centers |

**QUADRANT ASSIGNMENTS FOR PIN 1 ORIENTATION IN TAPE**

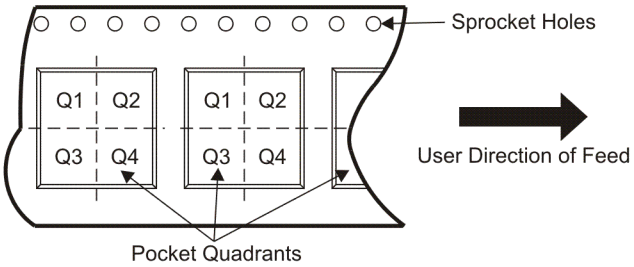


*All dimensions are nominal

| Device | Package Type | Package Drawing | Pins | SPQ | Reel Diameter (mm) | Reel Width W1 (mm) | A0 (mm) | B0 (mm) | K0 (mm) | P1 (mm) | W (mm) | Pin1 Quadrant |
|---|---|---|---|---|---|---|---|---|---|---|---|---|
| CD4060BM96 | SOIC | D | 16 | 2500 | 330.0 | 16.4 | 6.5 | 10.3 | 2.1 | 8.0 | 16.0 | Q1 |
| CD4060BNSR | SO | NS | 16 | 2000 | 330.0 | 16.4 | 8.2 | 10.5 | 2.5 | 12.0 | 16.0 | Q1 |
| CD4060BPWR | TSSOP | PW | 16 | 2000 | 330.0 | 12.4 | 7.0 | 5.6 | 1.6 | 8.0 | 12.0 | Q1 |

**TAPE AND REEL BOX DIMENSIONS**

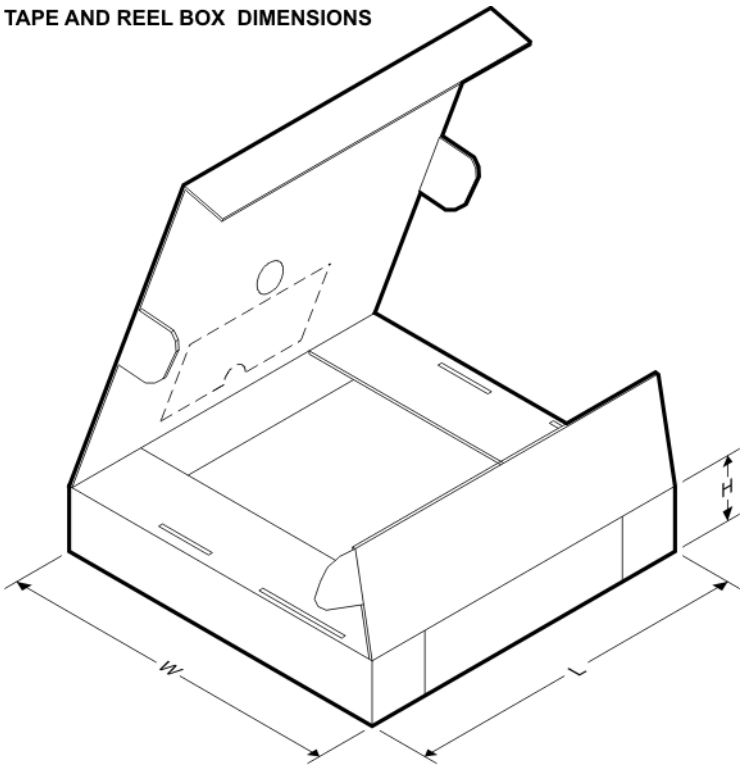


*All dimensions are nominal

| Device | Package Type | Package Drawing | Pins | SPQ | Length (mm) | Width (mm) | Height (mm) |
|---|---|---|---|---|---|---|---|
| CD4060BM96 | SOIC | D | 16 | 2500 | 333.2 | 345.9 | 28.6 |
| CD4060BNSR | SO | NS | 16 | 2000 | 346.0 | 346.0 | 33.0 |
| CD4060BPWR | TSSOP | PW | 16 | 2000 | 346.0 | 346.0 | 29.0 |

**PW (R-PDSO-G**)** **PLASTIC SMALL-OUTLINE PACKAGE**

**14 PINS SHOWN**

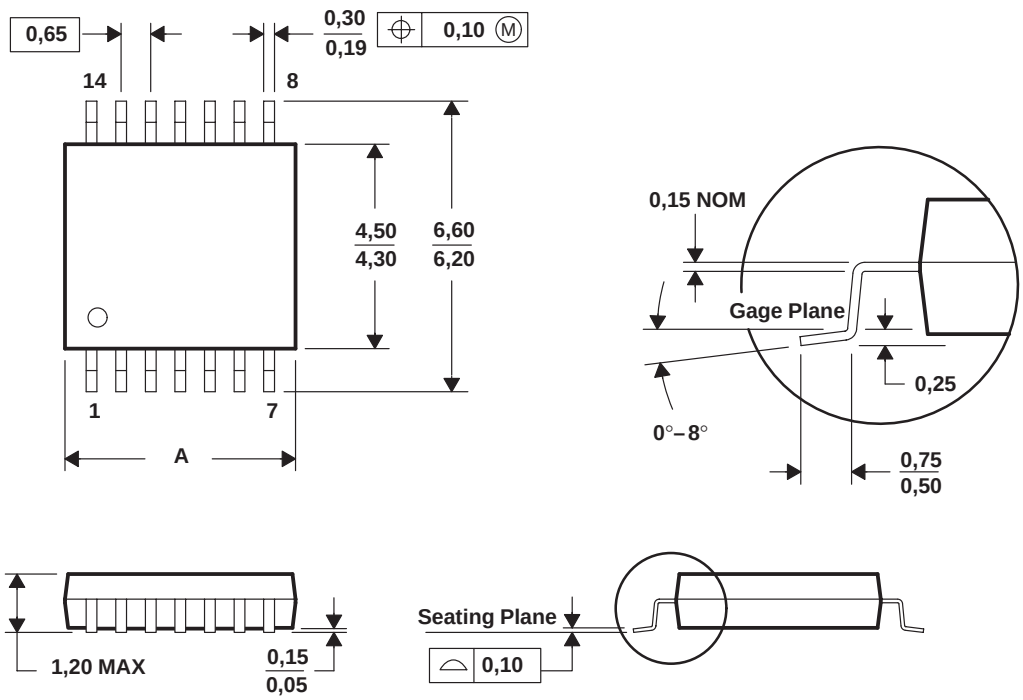


| DIM \ PINS ** | 8 | 14 | 16 | 20 | 24 | 28 |
|---|---|---|---|---|---|---|
| A MAX | 3,10 | 5,10 | 5,10 | 6,60 | 7,90 | 9,80 |
| A MIN | 2,90 | 4,90 | 4,90 | 6,40 | 7,70 | 9,60 |

**4040064/F 01/97**

NOTES: A. All linear dimensions are in millimeters.
B. This drawing is subject to change without notice.
C. Body dimensions do not include mold flash or protrusion not to exceed 0,15.
D. Falls within JEDEC MO-153

J (R–GDIP–T**) CERAMIC DUAL IN–LINE PACKAGE

14 LEADS SHOWN

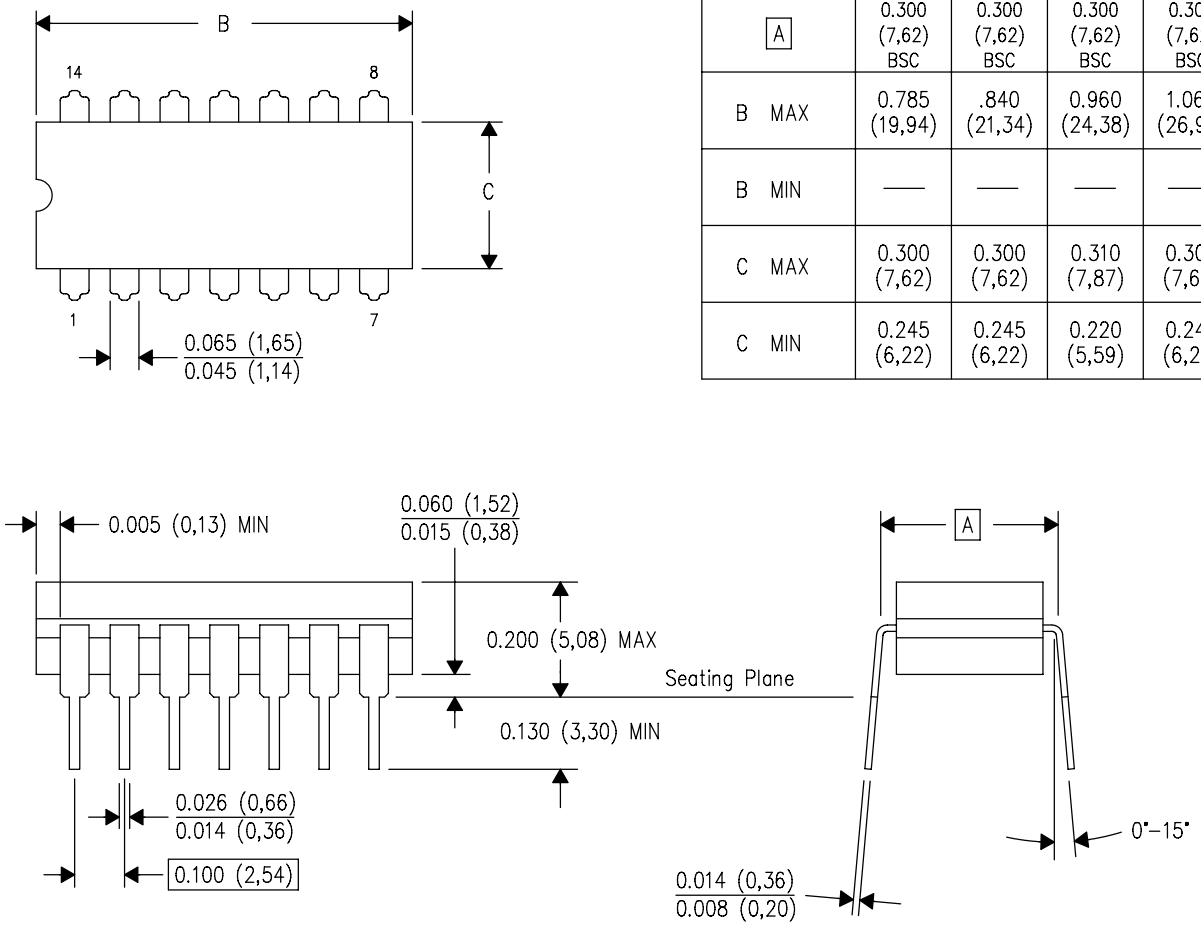


| DIM \ PINS ** | 14 | 16 | 18 | 20 |
|---|---|---|---|---|
| A | 0.300 (7,62) BSC | 0.300 (7,62) BSC | 0.300 (7,62) BSC | 0.300 (7,62) BSC |
| B MAX | 0.785 (19,94) | .840 (21,34) | 0.960 (24,38) | 1.060 (26,92) |
| B MIN | — | — | — | — |
| C MAX | 0.300 (7,62) | 0.300 (7,62) | 0.310 (7,87) | 0.300 (7,62) |
| C MIN | 0.245 (6,22) | 0.245 (6,22) | 0.220 (5,59) | 0.245 (6,22) |

4040083/F 03/03

NOTES:
- A. All linear dimensions are in inches (millimeters).
- B. This drawing is subject to change without notice.
- C. This package is hermetically sealed with a ceramic lid using glass frit.
- D. Index point is provided on cap for terminal identification only on press ceramic glass frit seal only.
- E. Falls within MIL STD 1835 GDIP1–T14, GDIP1–T16, GDIP1–T18 and GDIP1–T20.

## MECHANICAL DATA

**NS (R-PDSO-G**)** **PLASTIC SMALL-OUTLINE PACKAGE**

**14-PINS SHOWN**

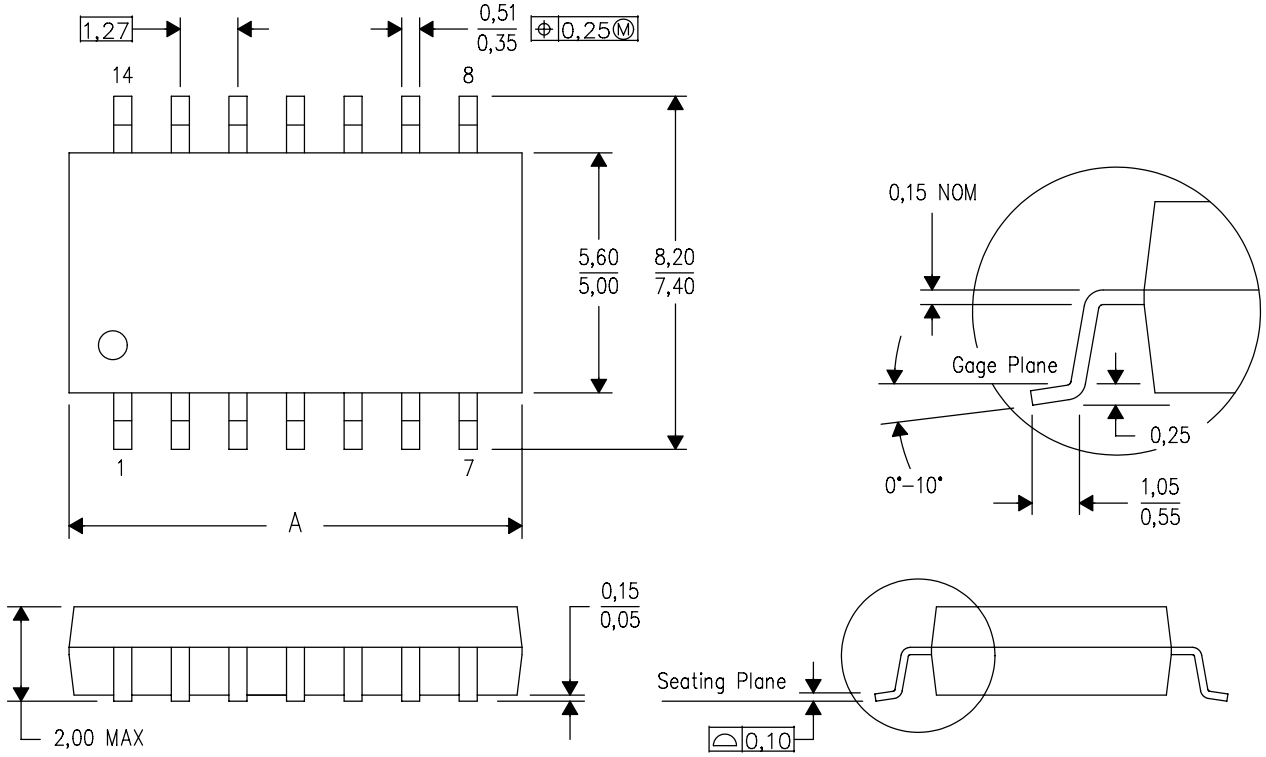


| DIM \ PINS ** | 14 | 16 | 20 | 24 |
|---|---|---|---|---|
| A MAX | 10,50 | 10,50 | 12,90 | 15,30 |
| A MIN | 9,90 | 9,90 | 12,30 | 14,70 |

4040062/C 03/03

NOTES:
A. All linear dimensions are in millimeters.
B. This drawing is subject to change without notice.
C. Body dimensions do not include mold flash or protrusion, not to exceed 0,15.

D (R–PDSO–G16) PLASTIC SMALL–OUTLINE PACKAGE

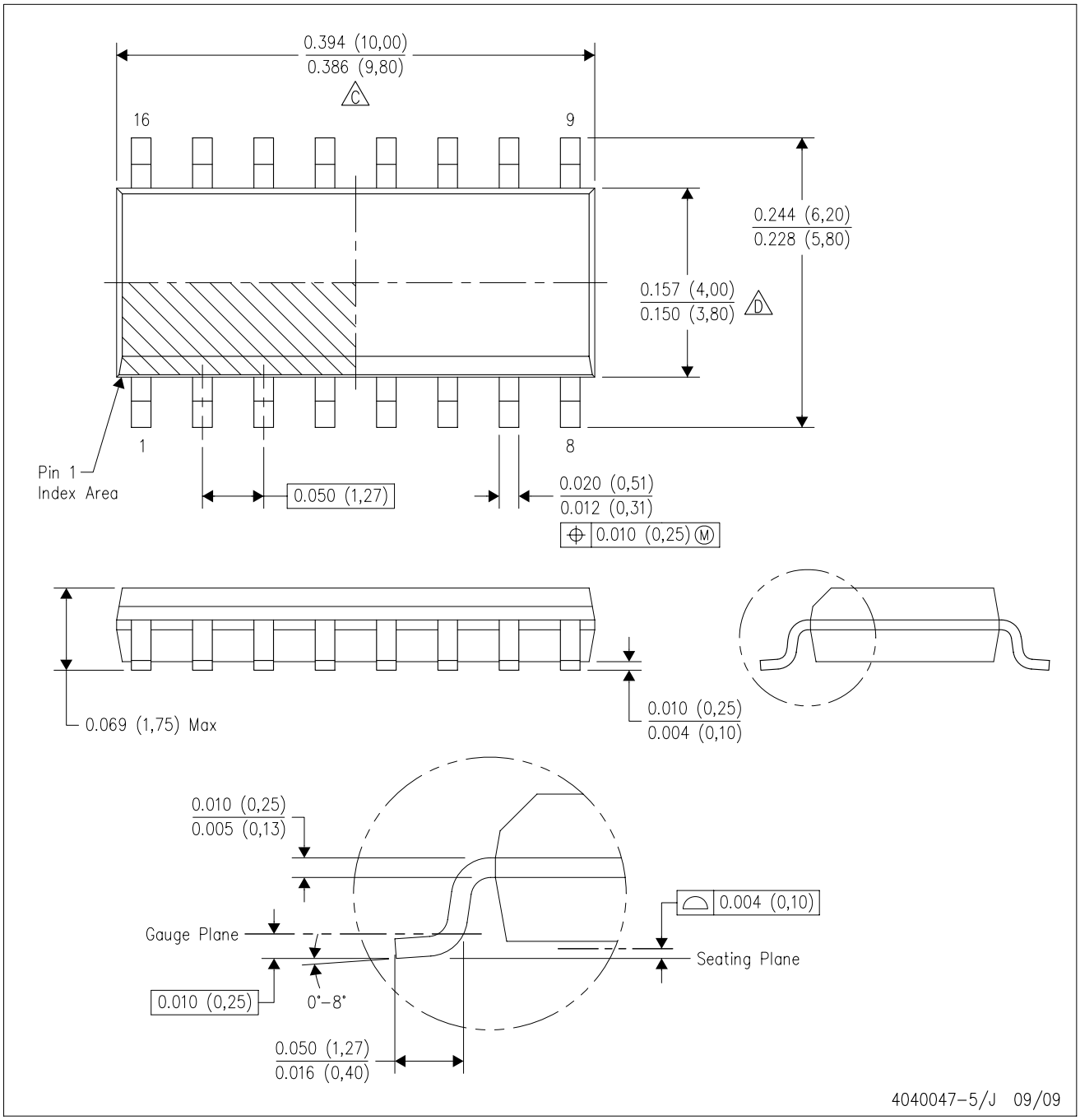


NOTES:
A. All linear dimensions are in inches (millimeters).
B. This drawing is subject to change without notice.
C. Body length does not include mold flash, protrusions, or gate burrs. Mold flash, protrusions, or gate burrs shall not exceed .006 (0,15) per end.
D. Body width does not include interlead flash. Interlead flash shall not exceed .017 (0,43) per side.
E. Reference JEDEC MS–012 variation AC.

D(R–PDSO–G16)

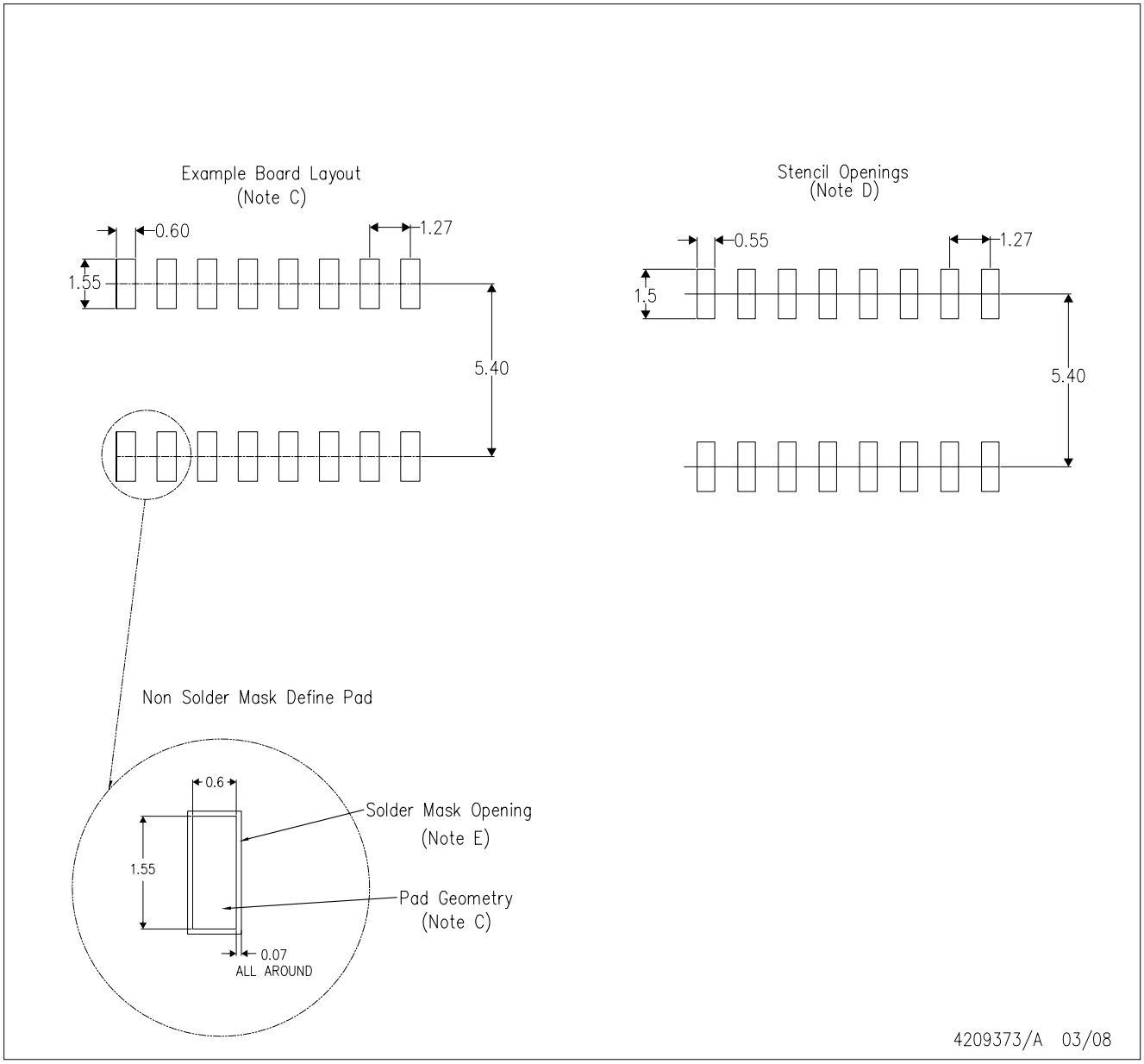


NOTES:
A. All linear dimensions are in millimeters.
B. This drawing is subject to change without notice.
C. Refer to IPC7351 for alternate board design.
D. Laser cutting apertures with trapezoidal walls and also rounding corners will offer better paste release. Customers should contact their board assembly site for stencil design recommendations. Refer to IPC–7525
E. Customers should contact their board fabrication site for solder mask tolerances between and around signal pads.

## N (R–PDIP–T**) PLASTIC DUAL–IN–LINE PACKAGE

16 PINS SHOWN

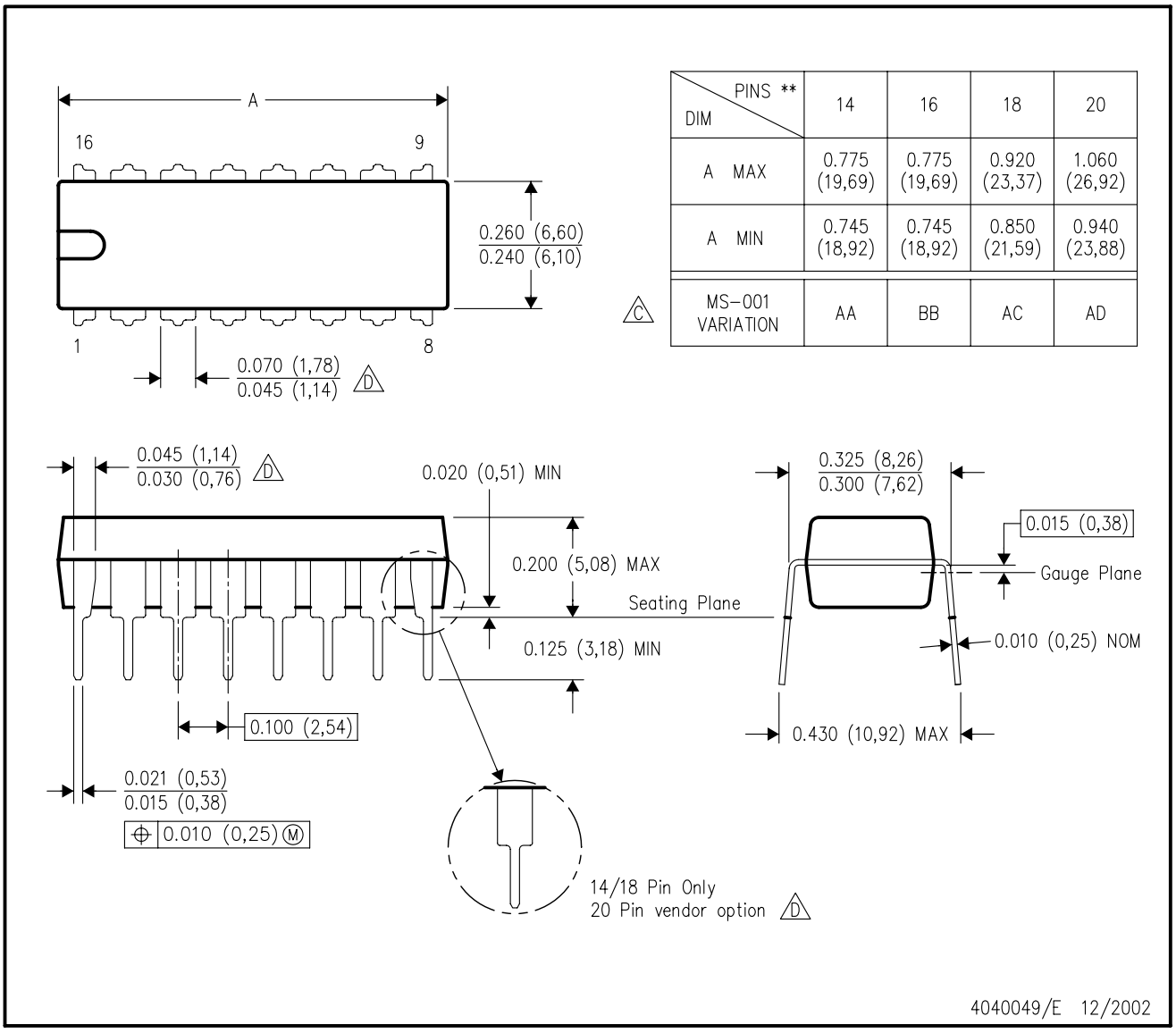


| DIM \ PINS ** | 14 | 16 | 18 | 20 |
|---|---|---|---|---|
| A MAX | 0.775 (19,69) | 0.775 (19,69) | 0.920 (23,37) | 1.060 (26,92) |
| A MIN | 0.745 (18,92) | 0.745 (18,92) | 0.850 (21,59) | 0.940 (23,88) |
| MS–001 VARIATION (C) | AA | BB | AC | AD |

NOTES:
A. All linear dimensions are in inches (millimeters).
B. This drawing is subject to change without notice.
C. Falls within JEDEC MS–001, except 18 and 20 pin minimum body length (Dim A).
D. The 20 pin end lead shoulder width is a vendor option, either half or full width.

## PACKAGING INFORMATION

| Orderable part number | Status (1) | Material type (2) | Package \| Pins | Package qty \| Carrier | RoHS (3) | Lead finish/ Ball material (4) | MSL rating/ Peak reflow (5) | Op temp (°C) | Part marking (6) |
|---|---|---|---|---|---|---|---|---|---|
| CD4060BE | Active | Production | PDIP (N) \| 16 | 25 \| TUBE | Yes | NIPDAU | N/A for Pkg Type | -55 to 125 | CD4060BE |
| CD4060BE.A | Active | Production | PDIP (N) \| 16 | 25 \| TUBE | Yes | NIPDAU | N/A for Pkg Type | -55 to 125 | CD4060BE |
| CD4060BEE4 | Active | Production | PDIP (N) \| 16 | 25 \| TUBE | Yes | NIPDAU | N/A for Pkg Type | -55 to 125 | CD4060BE |
| CD4060BF | Active | Production | CDIP (J) \| 16 | 25 \| TUBE | No | SNPB | N/A for Pkg Type | -55 to 125 | CD4060BF |
| CD4060BF.A | Active | Production | CDIP (J) \| 16 | 25 \| TUBE | No | SNPB | N/A for Pkg Type | -55 to 125 | CD4060BF |
| CD4060BF3A | Active | Production | CDIP (J) \| 16 | 25 \| TUBE | No | SNPB | N/A for Pkg Type | -55 to 125 | CD4060BF3A |
| CD4060BF3A.A | Active | Production | CDIP (J) \| 16 | 25 \| TUBE | No | SNPB | N/A for Pkg Type | -55 to 125 | CD4060BF3A |
| CD4060BM | Active | Production | SOIC (D) \| 16 | 40 \| TUBE | Yes | NIPDAU | Level-1-260C-UNLIM | -55 to 125 | CD4060BM |
| CD4060BM.A | Active | Production | SOIC (D) \| 16 | 40 \| TUBE | Yes | NIPDAU | Level-1-260C-UNLIM | -55 to 125 | CD4060BM |
| CD4060BM96 | Active | Production | SOIC (D) \| 16 | 2500 \| LARGE T&R | Yes | NIPDAU | Level-1-260C-UNLIM | -55 to 125 | CD4060BM |
| CD4060BM96.A | Active | Production | SOIC (D) \| 16 | 2500 \| LARGE T&R | Yes | NIPDAU | Level-1-260C-UNLIM | -55 to 125 | CD4060BM |
| CD4060BMG4 | Active | Production | SOIC (D) \| 16 | 40 \| TUBE | Yes | NIPDAU | Level-1-260C-UNLIM | -55 to 125 | CD4060BM |
| CD4060BMT | Obsolete | Production | SOIC (D) \| 16 | - | - | Call TI | Call TI | -55 to 125 | CD4060BM |
| CD4060BNSR | Active | Production | SOP (NS) \| 16 | 2000 \| LARGE T&R | Yes | NIPDAU | Level-1-260C-UNLIM | -55 to 125 | CD4060B |
| CD4060BNSR.A | Active | Production | SOP (NS) \| 16 | 2000 \| LARGE T&R | Yes | NIPDAU | Level-1-260C-UNLIM | -55 to 125 | CD4060B |
| CD4060BPW | Obsolete | Production | TSSOP (PW) \| 16 | - | - | Call TI | Call TI | -55 to 125 | CM060B |
| CD4060BPWR | Active | Production | TSSOP (PW) \| 16 | 2000 \| LARGE T&R | Yes | NIPDAU | Level-1-260C-UNLIM | -55 to 125 | CM060B |
| CD4060BPWR.A | Active | Production | TSSOP (PW) \| 16 | 2000 \| LARGE T&R | Yes | NIPDAU | Level-1-260C-UNLIM | -55 to 125 | CM060B |
| CD4060BPWRG4 | Active | Production | TSSOP (PW) \| 16 | 2000 \| LARGE T&R | Yes | NIPDAU | Level-1-260C-UNLIM | -55 to 125 | CM060B |

(1) **Status:** For more details on status, see our product life cycle.

(2) **Material type:** When designated, preproduction parts are prototypes/experimental devices, and are not yet approved or released for full production. Testing and final process, including without limitation quality assurance, reliability performance testing, and/or process qualification, may not yet be complete, and this item is subject to further changes or possible discontinuation. If available for ordering, purchases will be subject to an additional waiver at checkout, and are intended for early internal evaluation purposes only. These items are sold without warranties of any kind.

(3) **RoHS values:** Yes, No, RoHS Exempt. See the TI RoHS Statement for additional information and value definition.

(4) **Lead finish/Ball material:** Parts may have multiple material finish options. Finish options are separated by a vertical ruled line. Lead finish/Ball material values may wrap to two lines if the finish value exceeds the maximum column width.

(5) **MSL rating/Peak reflow:** The moisture sensitivity level ratings and peak solder (reflow) temperatures. In the event that a part has multiple moisture sensitivity ratings, only the lowest level per JEDEC standards is shown. Refer to the shipping label for the actual reflow temperature that will be used to mount the part to the printed circuit board.

(6) **Part marking:** There may be an additional marking, which relates to the logo, the lot trace code information, or the environmental category of the part.

Multiple part markings will be inside parentheses. Only one part marking contained in parentheses and separated by a "~" will appear on a part. If a line is indented then it is a continuation of the previous line and the two combined represent the entire part marking for that device.

**Important Information and Disclaimer:**The information provided on this page represents TI's knowledge and belief as of the date that it is provided. TI bases its knowledge and belief on information provided by third parties, and makes no representation or warranty as to the accuracy of such information. Efforts are underway to better integrate information from third parties. TI has taken and continues to take reasonable steps to provide representative and accurate information but may not have conducted destructive testing or chemical analysis on incoming materials and chemicals. TI and TI suppliers consider certain information to be proprietary, and thus CAS numbers and other limited information may not be available for release.

In no event shall TI's liability arising out of such information exceed the total purchase price of the TI part(s) at issue in this document sold by TI to Customer on an annual basis.

**OTHER QUALIFIED VERSIONS OF CD4060B, CD4060B-MIL :**

- Catalog : CD4060B
- Military : CD4060B-MIL

NOTE: Qualified Version Definitions:

- Catalog - TI's standard catalog product
- Military - QML certified for Military and Defense Applications

## TAPE AND REEL INFORMATION

**REEL DIMENSIONS**

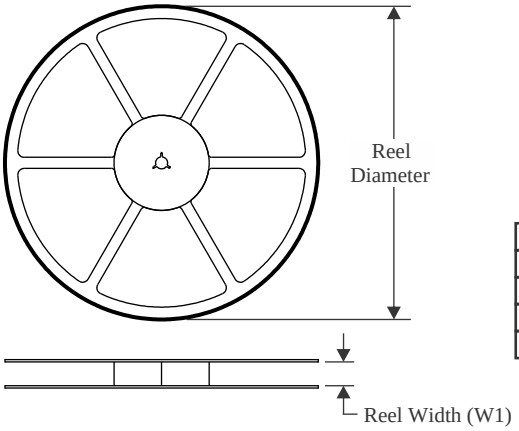


**TAPE DIMENSIONS**

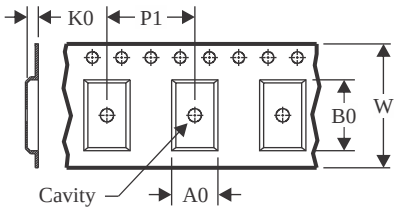


| | |
|---|---|
| A0 | Dimension designed to accommodate the component width |
| B0 | Dimension designed to accommodate the component length |
| K0 | Dimension designed to accommodate the component thickness |
| W | Overall width of the carrier tape |
| P1 | Pitch between successive cavity centers |

**QUADRANT ASSIGNMENTS FOR PIN 1 ORIENTATION IN TAPE**

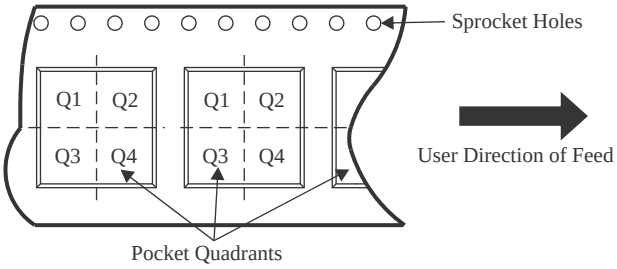


*All dimensions are nominal

| Device | Package Type | Package Drawing | Pins | SPQ | Reel Diameter (mm) | Reel Width W1 (mm) | A0 (mm) | B0 (mm) | K0 (mm) | P1 (mm) | W (mm) | Pin1 Quadrant |
|---|---|---|---|---|---|---|---|---|---|---|---|---|
| CD4060BM96 | SOIC | D | 16 | 2500 | 330.0 | 16.4 | 6.5 | 10.3 | 2.1 | 8.0 | 16.0 | Q1 |
| CD4060BNSR | SOP | NS | 16 | 2000 | 330.0 | 16.4 | 8.1 | 10.4 | 2.5 | 12.0 | 16.0 | Q1 |
| CD4060BPWR | TSSOP | PW | 16 | 2000 | 330.0 | 12.4 | 6.9 | 5.6 | 1.6 | 8.0 | 12.0 | Q1 |

TAPE AND REEL BOX DIMENSIONS

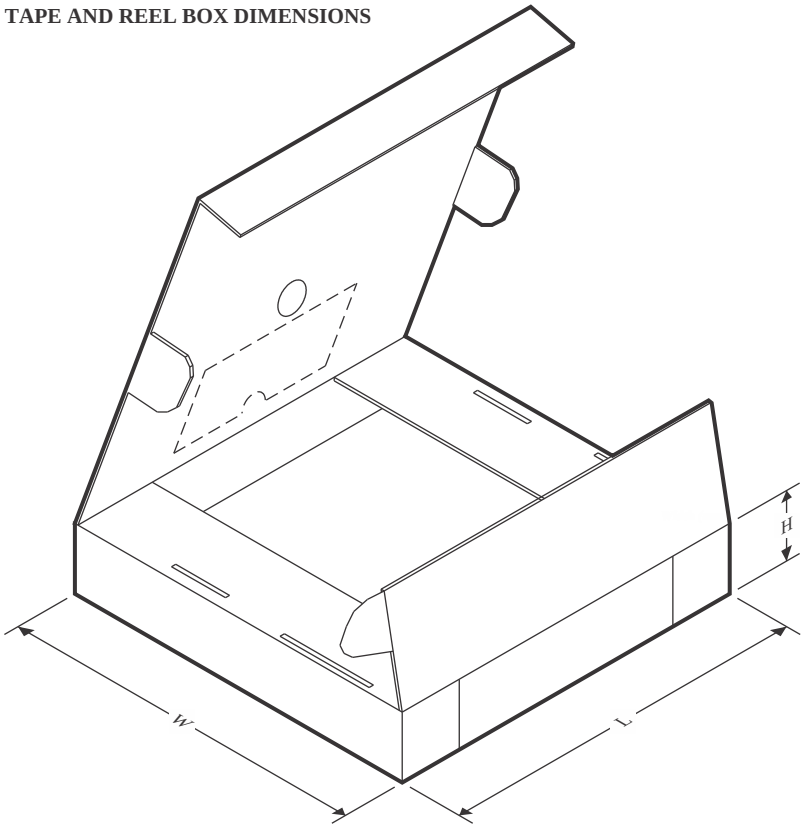


*All dimensions are nominal

| Device | Package Type | Package Drawing | Pins | SPQ | Length (mm) | Width (mm) | Height (mm) |
|---|---|---|---|---|---|---|---|
| CD4060BM96 | SOIC | D | 16 | 2500 | 353.0 | 353.0 | 32.0 |
| CD4060BNSR | SOP | NS | 16 | 2000 | 356.0 | 356.0 | 35.0 |
| CD4060BPWR | TSSOP | PW | 16 | 2000 | 356.0 | 356.0 | 35.0 |

## TUBE

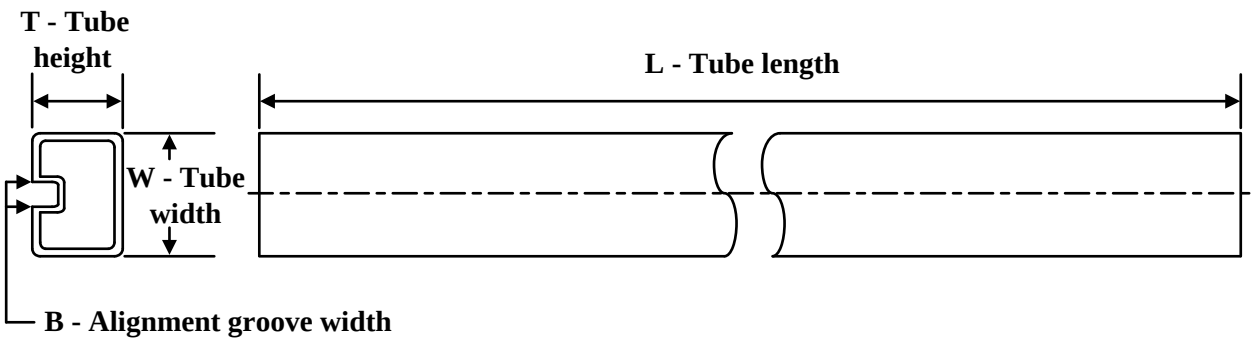


*All dimensions are nominal

| Device | Package Name | Package Type | Pins | SPQ | L (mm) | W (mm) | T (µm) | B (mm) |
|---|---|---|---|---|---|---|---|---|
| CD4060BE | N | PDIP | 16 | 25 | 506 | 13.97 | 11230 | 4.32 |
| CD4060BE.A | N | PDIP | 16 | 25 | 506 | 13.97 | 11230 | 4.32 |
| CD4060BEE4 | N | PDIP | 16 | 25 | 506 | 13.97 | 11230 | 4.32 |
| CD4060BM | D | SOIC | 16 | 40 | 507 | 8 | 3940 | 4.32 |
| CD4060BM.A | D | SOIC | 16 | 40 | 507 | 8 | 3940 | 4.32 |
| CD4060BMG4 | D | SOIC | 16 | 40 | 507 | 8 | 3940 | 4.32 |

J (R–GDIP–T**) CERAMIC DUAL IN–LINE PACKAGE

14 LEADS SHOWN

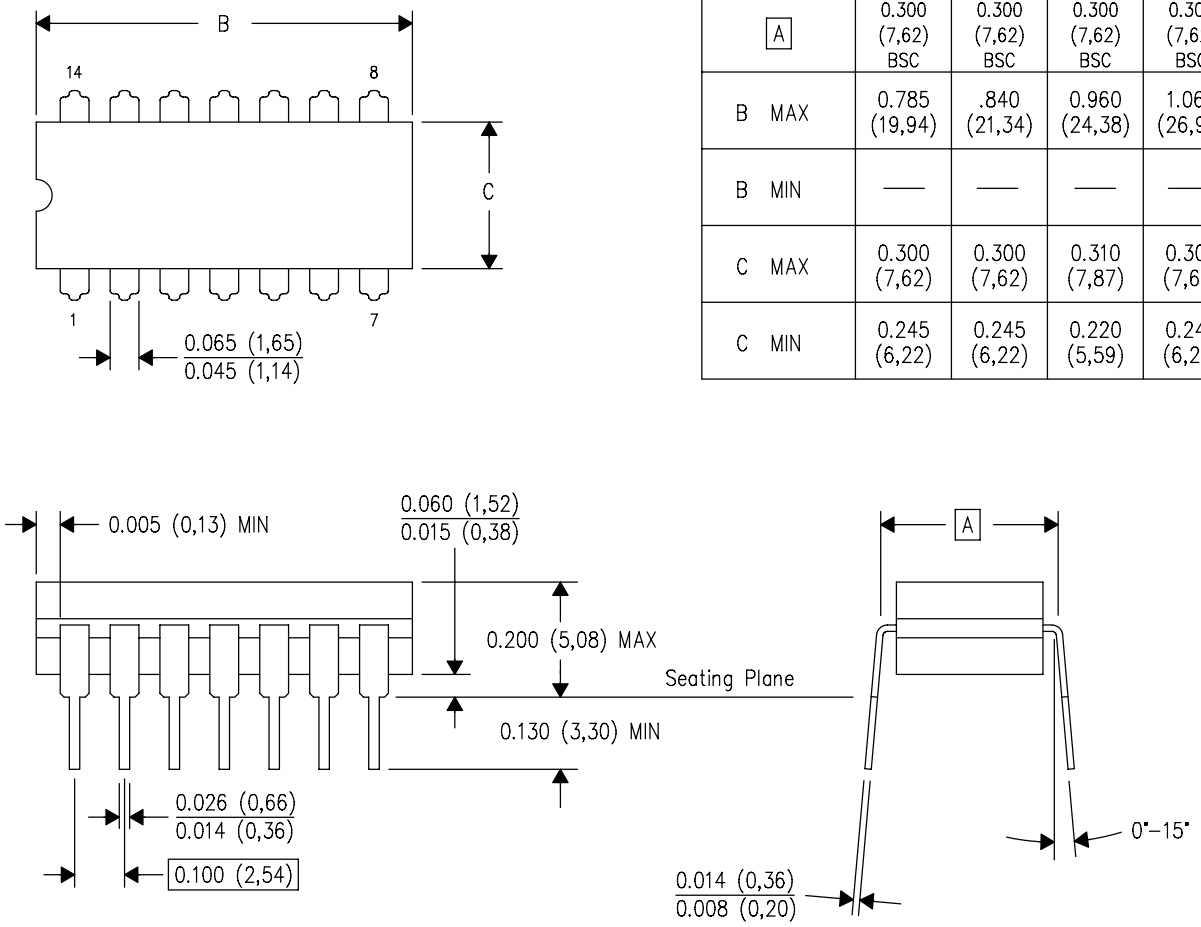


| DIM \ PINS ** | 14 | 16 | 18 | 20 |
|---|---|---|---|---|
| A | 0.300 (7,62) BSC | 0.300 (7,62) BSC | 0.300 (7,62) BSC | 0.300 (7,62) BSC |
| B MAX | 0.785 (19,94) | .840 (21,34) | 0.960 (24,38) | 1.060 (26,92) |
| B MIN | — | — | — | — |
| C MAX | 0.300 (7,62) | 0.300 (7,62) | 0.310 (7,87) | 0.300 (7,62) |
| C MIN | 0.245 (6,22) | 0.245 (6,22) | 0.220 (5,59) | 0.245 (6,22) |

4040083/F 03/03

NOTES:
- A. All linear dimensions are in inches (millimeters).
- B. This drawing is subject to change without notice.
- C. This package is hermetically sealed with a ceramic lid using glass frit.
- D. Index point is provided on cap for terminal identification only on press ceramic glass frit seal only.
- E. Falls within MIL STD 1835 GDIP1–T14, GDIP1–T16, GDIP1–T18 and GDIP1–T20.

## N (R–PDIP–T**) PLASTIC DUAL–IN–LINE PACKAGE

16 PINS SHOWN

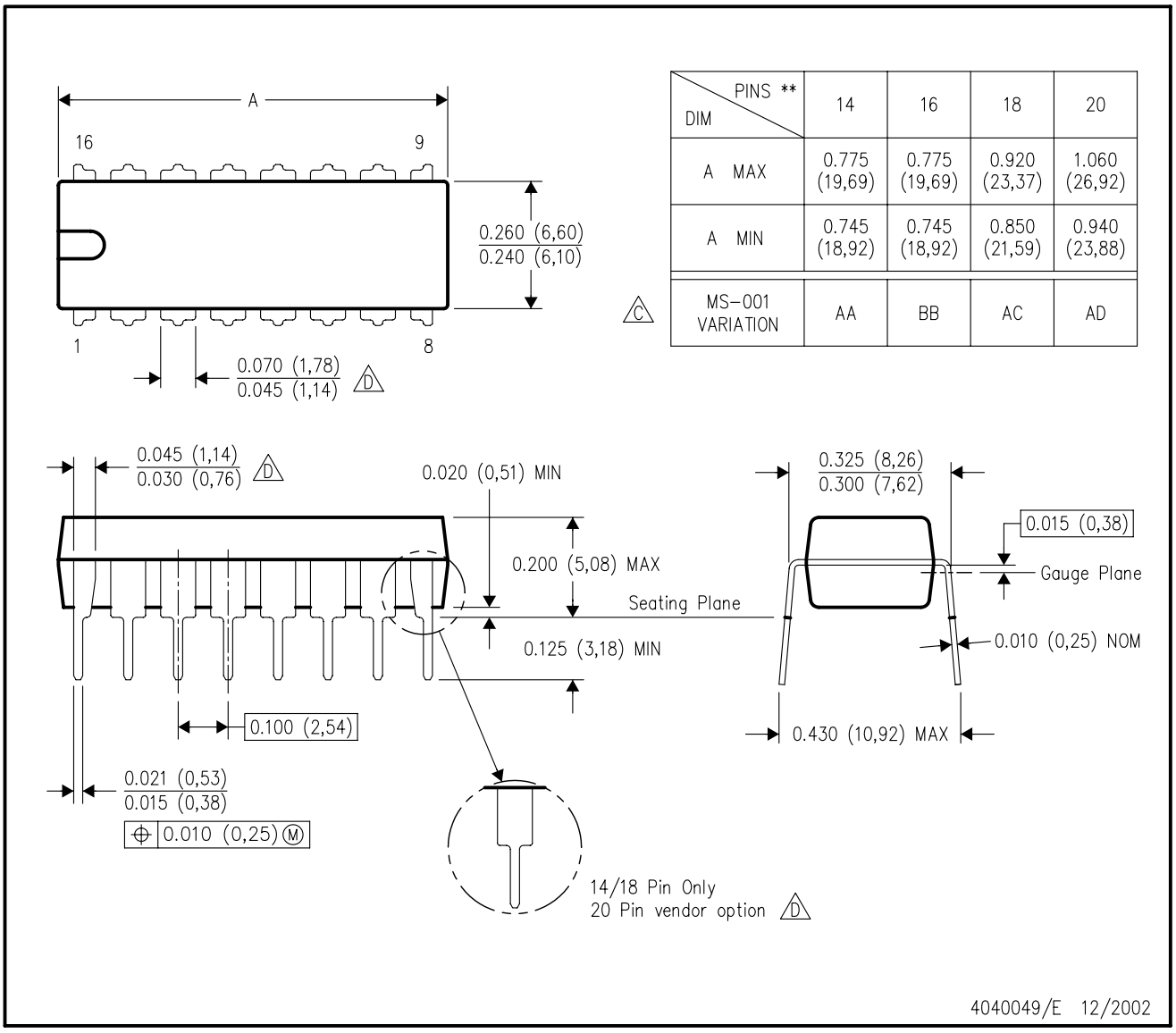


| DIM \ PINS ** | 14 | 16 | 18 | 20 |
|---|---|---|---|---|
| A MAX | 0.775 (19,69) | 0.775 (19,69) | 0.920 (23,37) | 1.060 (26,92) |
| A MIN | 0.745 (18,92) | 0.745 (18,92) | 0.850 (21,59) | 0.940 (23,88) |
| MS–001 VARIATION (C) | AA | BB | AC | AD |

NOTES:
A. All linear dimensions are in inches (millimeters).
B. This drawing is subject to change without notice.
C. Falls within JEDEC MS–001, except 18 and 20 pin minimum body length (Dim A).
D. The 20 pin end lead shoulder width is a vendor option, either half or full width.

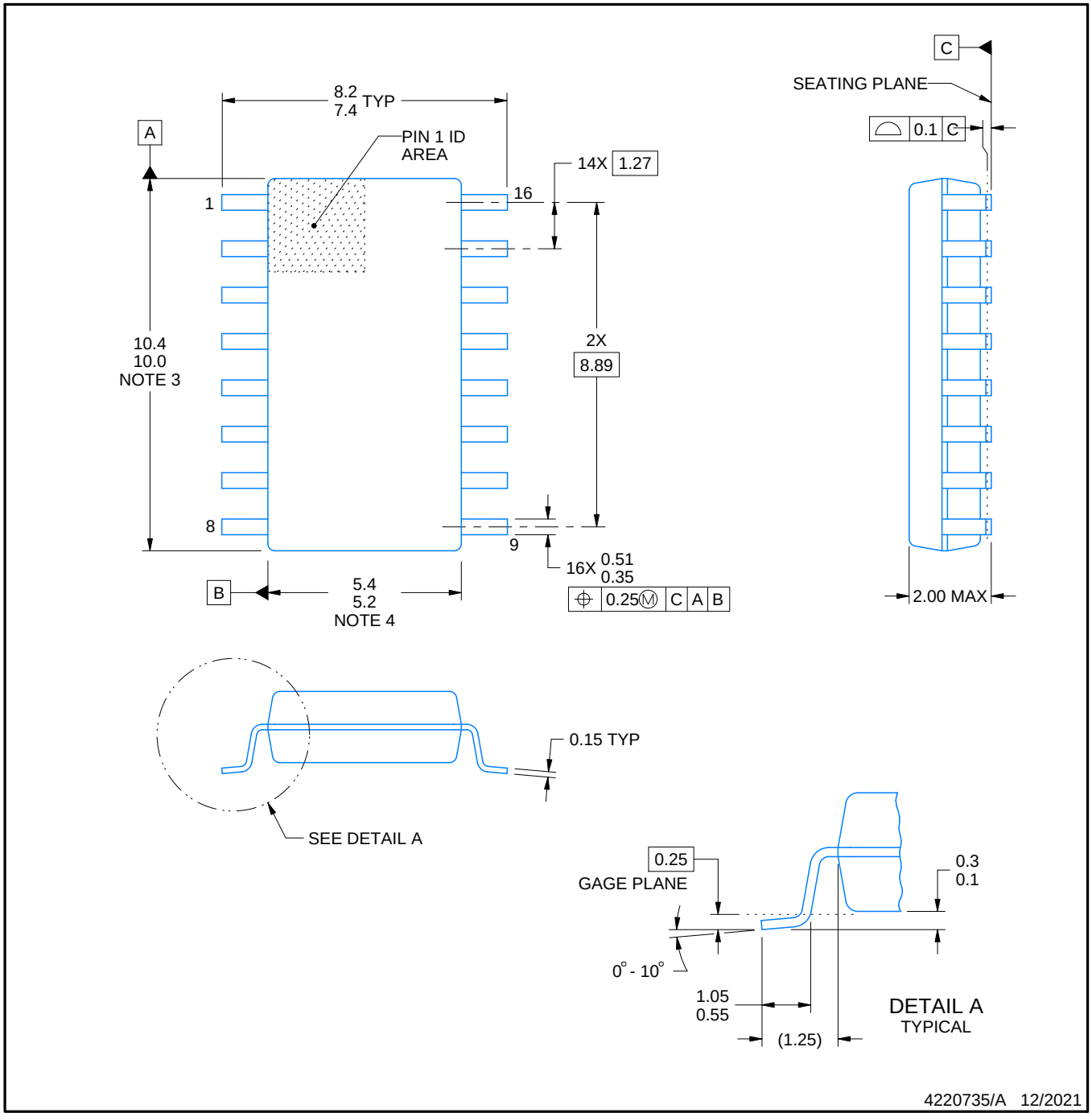


NOTES:

1. All linear dimensions are in millimeters. Dimensions in parenthesis are for reference only. Dimensioning and tolerancing per ASME Y14.5M.
2. This drawing is subject to change without notice.
3. This dimension does not include mold flash, protrusions, or gate burrs. Mold flash, protrusions, or gate burrs shall not exceed 0.15 mm, per side.
4. This dimension does not include interlead flash. Interlead flash shall not exceed 0.25 mm, per side.

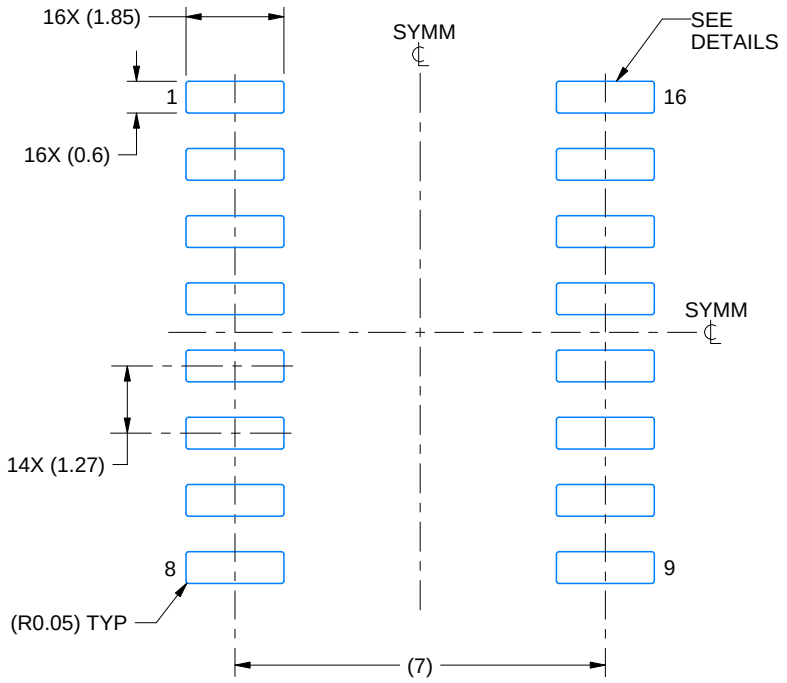


LAND PATTERN EXAMPLE
SCALE:7X

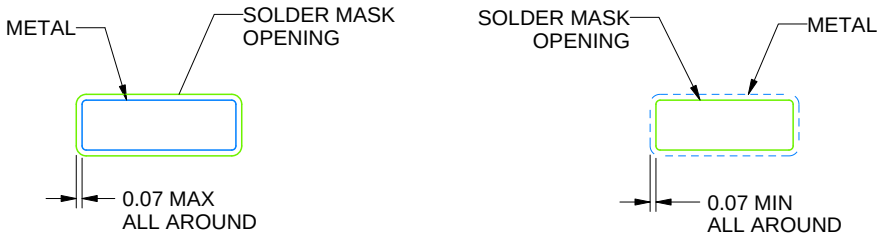


NON SOLDER MASK DEFINED

SOLDER MASK DEFINED

SOLDER MASK DETAILS

4220735/A 12/2021

NOTES: (continued)

5. Publication IPC-7351 may have alternate designs.
6. Solder mask tolerances between and around signal pads can vary based on board fabrication site.

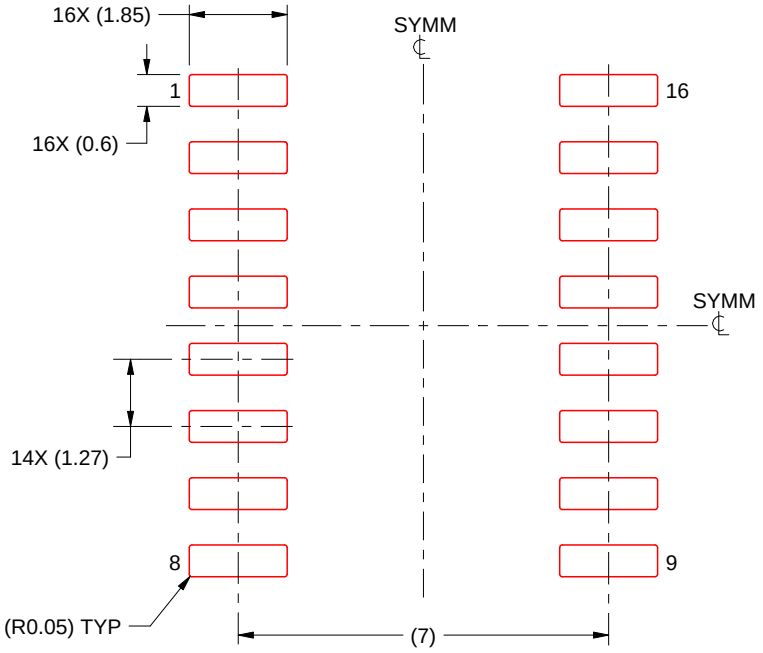


SOLDER PASTE EXAMPLE
BASED ON 0.125 mm THICK STENCIL
SCALE:7X

4220735/A 12/2021

NOTES: (continued)

7. Laser cutting apertures with trapezoidal walls and rounded corners may offer better paste release. IPC-7525 may have alternate design recommendations.
8. Board assembly site may have different recommendations for stencil design.

D (R–PDSO–G16) PLASTIC SMALL OUTLINE

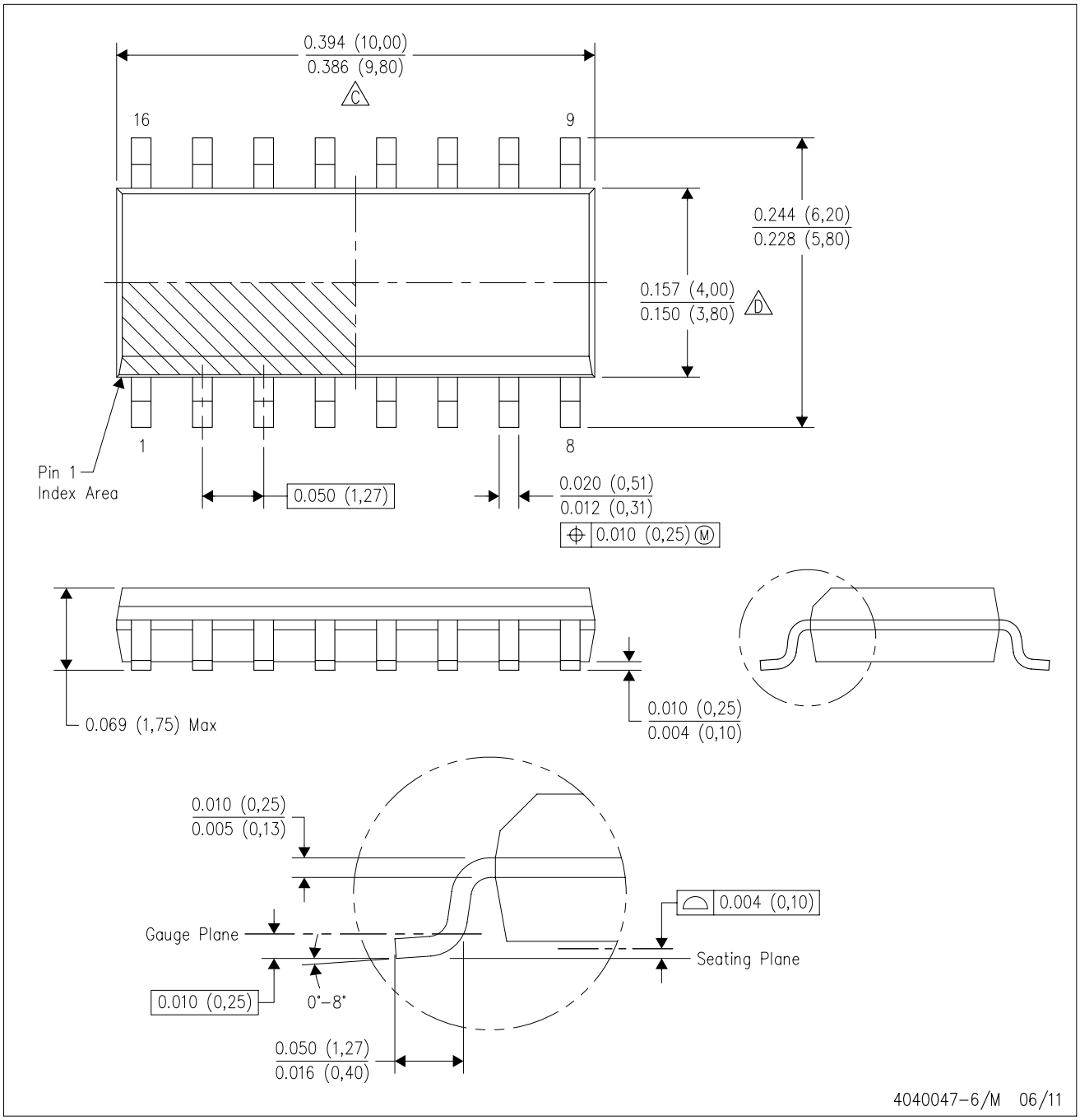


NOTES:
A. All linear dimensions are in inches (millimeters).
B. This drawing is subject to change without notice.
C. Body length does not include mold flash, protrusions, or gate burrs. Mold flash, protrusions, or gate burrs shall not exceed 0.006 (0,15) each side.
D. Body width does not include interlead flash. Interlead flash shall not exceed 0.017 (0,43) each side.
E. Reference JEDEC MS–012 variation AC.

# PW0016A

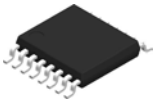

# PACKAGE OUTLINE

## TSSOP - 1.2 mm max height

SMALL OUTLINE PACKAGE

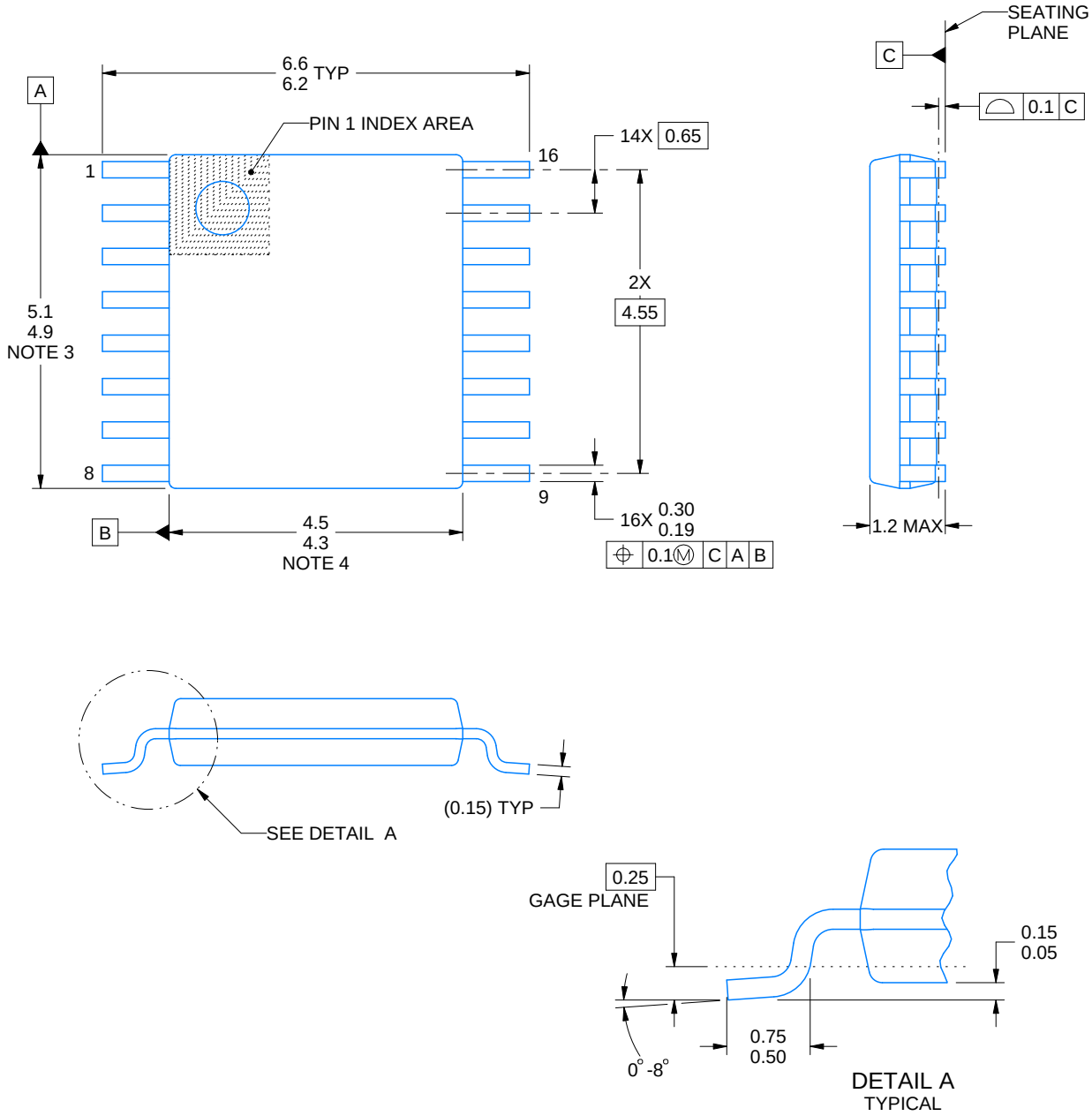


NOTES:

1. All linear dimensions are in millimeters. Any dimensions in parenthesis are for reference only. Dimensioning and tolerancing per ASME Y14.5M.
2. This drawing is subject to change without notice.
3. This dimension does not include mold flash, protrusions, or gate burrs. Mold flash, protrusions, or gate burrs shall not exceed 0.15 mm per side.
4. This dimension does not include interlead flash. Interlead flash shall not exceed 0.25 mm per side.
5. Reference JEDEC registration MO-153.

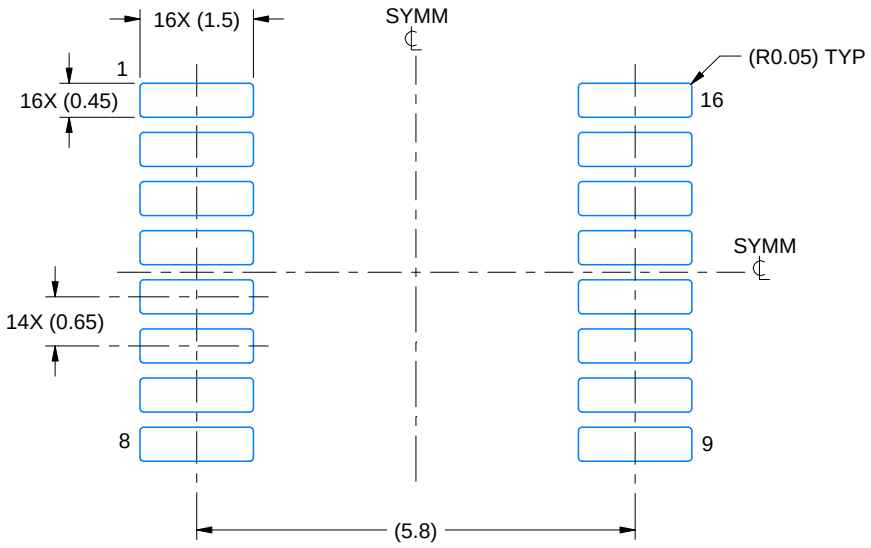


LAND PATTERN EXAMPLE
EXPOSED METAL SHOWN
SCALE: 10X

NON-SOLDER MASK DEFINED (PREFERRED)

SOLDER MASK DEFINED

SOLDER MASK DETAILS

4220204/A 02/2017

NOTES: (continued)

6. Publication IPC-7351 may have alternate designs.
7. Solder mask tolerances between and around signal pads can vary based on board fabrication site.

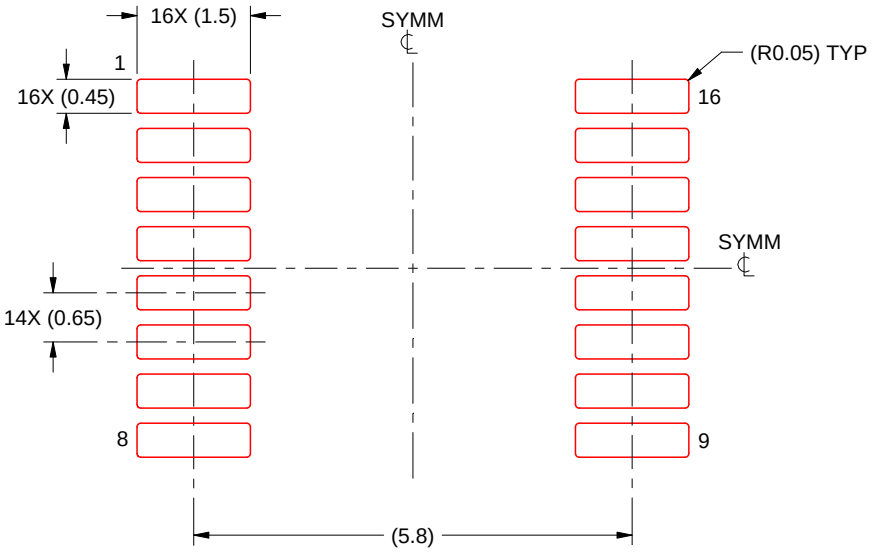


SOLDER PASTE EXAMPLE
BASED ON 0.125 mm THICK STENCIL
SCALE: 10X

4220204/A 02/2017

NOTES: (continued)

8. Laser cutting apertures with trapezoidal walls and rounded corners may offer better paste release. IPC-7525 may have alternate design recommendations.
9. Board assembly site may have different recommendations for stencil design.

## MECHANICAL DATA

**NS (R-PDSO-G**)** **PLASTIC SMALL-OUTLINE PACKAGE**

**14-PINS SHOWN**

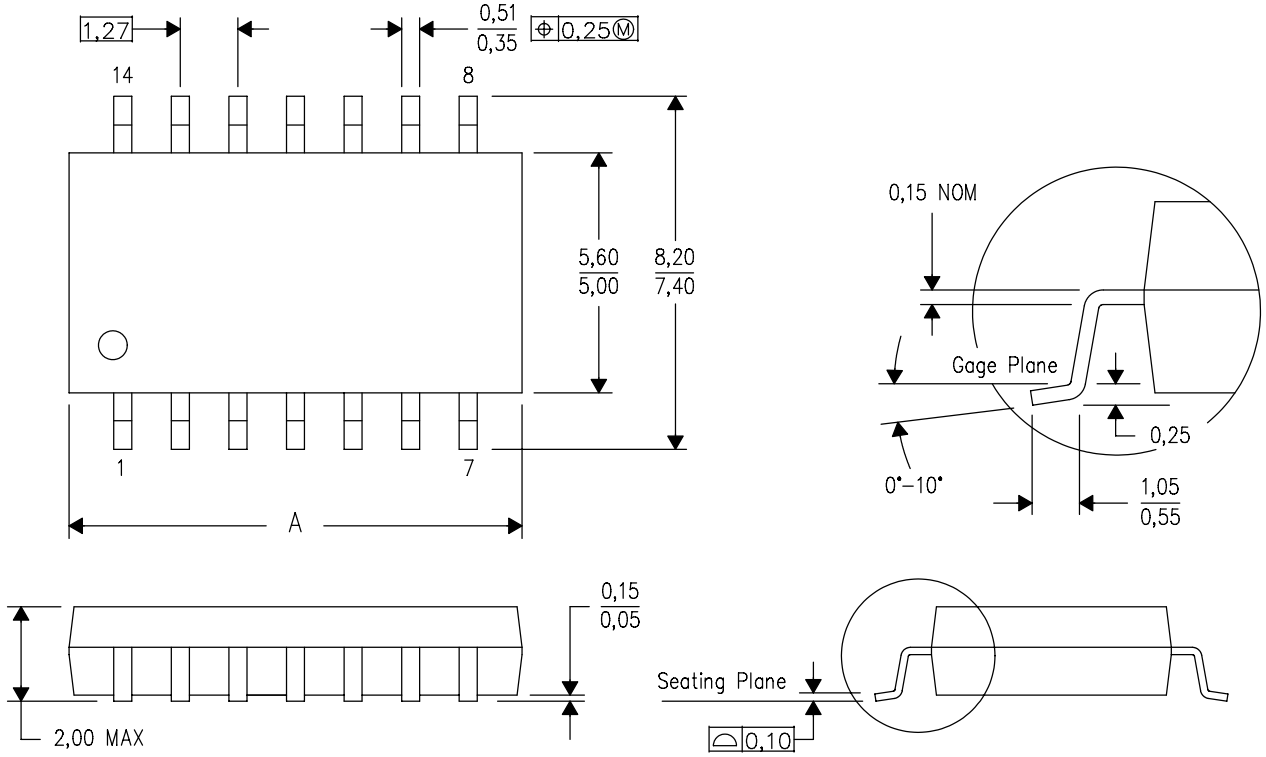


| DIM \ PINS ** | 14 | 16 | 20 | 24 |
|---|---|---|---|---|
| A MAX | 10,50 | 10,50 | 12,90 | 15,30 |
| A MIN | 9,90 | 9,90 | 12,30 | 14,70 |

4040062/C 03/03

NOTES:
A. All linear dimensions are in millimeters.
B. This drawing is subject to change without notice.
C. Body dimensions do not include mold flash or protrusion, not to exceed 0,15.

# IMPORTANT NOTICE AND DISCLAIMER

TI PROVIDES TECHNICAL AND RELIABILITY DATA (INCLUDING DATA SHEETS), DESIGN RESOURCES (INCLUDING REFERENCE DESIGNS), APPLICATION OR OTHER DESIGN ADVICE, WEB TOOLS, SAFETY INFORMATION, AND OTHER RESOURCES “AS IS” AND WITH ALL FAULTS, AND DISCLAIMS ALL WARRANTIES, EXPRESS AND IMPLIED, INCLUDING WITHOUT LIMITATION ANY IMPLIED WARRANTIES OF MERCHANTABILITY, FITNESS FOR A PARTICULAR PURPOSE OR NON-INFRINGEMENT OF THIRD PARTY INTELLECTUAL PROPERTY RIGHTS.

These resources are intended for skilled developers designing with TI products. You are solely responsible for (1) selecting the appropriate TI products for your application, (2) designing, validating and testing your application, and (3) ensuring your application meets applicable standards, and any other safety, security, regulatory or other requirements.

These resources are subject to change without notice. TI grants you permission to use these resources only for development of an application that uses the TI products described in the resource. Other reproduction and display of these resources is prohibited. No license is granted to any other TI intellectual property right or to any third party intellectual property right. TI disclaims responsibility for, and you will fully indemnify TI and its representatives against, any claims, damages, costs, losses, and liabilities arising out of your use of these resources.

TI’s products are provided subject to TI’s Terms of Sale or other applicable terms available either on ti.com or provided in conjunction with such TI products. TI’s provision of these resources does not expand or otherwise alter TI’s applicable warranties or warranty disclaimers for TI products.

TI objects to and rejects any additional or different terms you may have proposed.

Mailing Address: Texas Instruments, Post Office Box 655303, Dallas, Texas 75265
Copyright © 2025, Texas Instruments Incorporated