# LP5868T 8 × 18 LED High-Current Matrix Driver with 8-Bit Analog and 8-Bit or 16-Bit PWM Dimming

## 1 Features

- LED matrix topology:
  - 18 constant current sinks with 8 scan switches for 144 LED dots
  - Configurable for 1 to 8 scan switches
- Operating voltage range:
  - $V_{CC}/V_{LED}$ range: 2.7V to 5.5V
  - Logic pins compatible with 1.8V, 3.3V, and 5V
- 18 constant current sinks with high precision:
  - 100mA per current sink when $V_{CC} \geq 3.3V$
  - Device-to-device error: ±5%
  - Channel-to-channel error: ±5%
  - Phase-shift for balanced transient power
- Ultra-low power consumption:
  - Shutdown mode: $I_{CC} \leq 1\mu A$ when EN = Low
  - Standby mode: $I_{CC} \leq 10\mu A$ when EN = High and CHIP_EN = 0 (data retained)
  - Active mode: $I_{CC}$ = 5mA (typ.) when channel current = 12.5mA
- Flexible dimming options:
  - Individual ON/OFF control for each LED dot
  - Analog dimming (current gain control)
    - Global 7-step Maximum Current (MC) setting for all LED dots
    - 3 groups of 7-bit Color Current (CC) RGB setting
    - Individual 8-bit Dot Current (DC) setting for each LED dot
  - PWM dimming with audible-noise-free frequency
    - Global 8-bit PWM dimming for all LED dots
    - 3 programmable groups of 8-bit PWM dimming for LED dot arbitrary mapping
    - Individual 8-bit or 16-bit PWM dimming for each LED dot
- Full addressable SRAM to minimize data traffic
- Individual LED dot open/short detection
- De-ghosting and low brightness compensation
- Interface options:
  - 1MHz (max.) $I^2C$ interface when IFS = Low
  - 12MHz (max.) SPI interface when IFS = High

## 2 Applications

- LED animation and indication for:
  - Major and smart home appliances
  - Global RGB keyboard backlighting
  - Outdoor keypad backlighting
  - IR module for video surveillance and IP camera
  - Laser diode in optical module

## 3 Description

The LP5868T is a high-current and high-performance LED matrix driver. The device integrates 18 constant current sinks with N (N = 6/8/11) switching MOSFETs to support . The LP5868T integrates 8 MOSFETs for up to 144 LED dots or 48 RGB LEDs.

The LP5868T supports both analog dimming and PWM dimming methods. For analog dimming, each LED dot can be adjusted with 256 steps. For PWM dimming, the integrated 8-bit or 16-bit configurable PWM generators enable smooth and audible-noise-free dimming control. Each LED dot can also be arbitrarily mapped into 8-bit Group PWM to achieve dimming control together.

The LP5868T device implements full addressable SRAM to minimize the data traffic. The ghost-cancellation circuitry is integrated to eliminate both upside and downside ghosting. The LP5868T also supports LED open and short detection functions. Both 1MHz (maximum) $I^2C$ and 12MHz (maximum) SPI are available in LP5868T.

**Package Information**

| PART NUMBER | PACKAGE(1) | BODY SIZE (NOM) |
|---|---|---|
| LP5868T | RKP (VQFN, 40) | 5.00mm × 5.00mm |

(1) For all available packages, see the orderable addendum at the end of the data sheet.

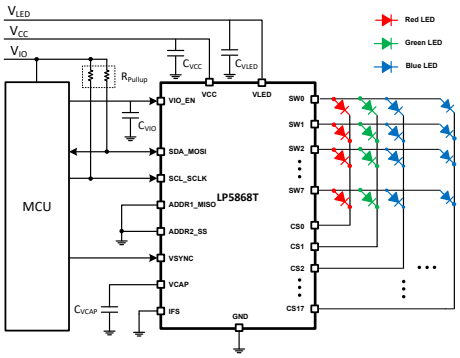


**Simplified Schematic**

An IMPORTANT NOTICE at the end of this data sheet addresses availability, warranty, changes, use in safety-critical applications, intellectual property matters and other important disclaimers. PRODUCTION DATA.

# Table of Contents

**1 Features**....1
**2 Applications**....1
**3 Description**....1
**4 Device Comparison**....3
**5 Pin Configuration and Functions**....4
**6 Specifications**....6
6.1 Absolute Maximum Ratings....6
6.2 ESD Ratings....6
6.3 Recommended Operating Conditions....6
6.4 Thermal Information....6
6.5 Electrical Characteristics....7
6.6 Timing Requirements....8
6.7 Typical Characteristics....11
**7 Detailed Description**....13
7.1 Overview....13
7.2 Functional Block Diagram....13
7.3 Feature Description....14
7.4 Device Functional Modes....25
7.5 Programming....26
7.6 Register Maps....31
**8 Application and Implementation**....46
8.1 Application Information....46
8.2 Typical Application....46
8.3 Power Supply Recommendations....49
8.4 Layout....49
**9 Device and Documentation Support**....51
9.1 Receiving Notification of Documentation Updates....51
9.2 Support Resources....51
9.3 Trademarks....51
9.4 Electrostatic Discharge Caution....51
9.5 Glossary....51
**10 Revision History**....51
**11 Mechanical, Packaging, and Orderable Information**....52


Copyright © 2024 Texas Instruments Incorporated

## 4 Device Comparison

| PART NUMBER | MATERIAL | LED DOT NUMBER | MAX CURRENT PER CS | PACKAGE(2) | SOFTWARE COMPATIBLE |
|---|---|---|---|---|---|
| LP5861T | LP5861TRSMR | 18 × 1 = 18 | 125mA | VQFN-32 | Yes |
| | LP5861TMRSMR(1) | | | | |
| LP5866T | LP5866TRKPR | 18 × 6 = 108 | 100mA | VQFN-40 | |
| | LP5866TMRKPR(1) | | | | |
| LP5868T | LP5868TRKPR | 18 × 8 = 144 | | | |
| | LP5868TMRKPR(1) | | | | |
| LP5860T | LP5860TRKPR | 18 × 11 = 198 | | | |
| | LP5860TMRKPR(1) | | | | |
| LP5861 | LP5861RSMR | 18 × 1 = 18 | 50mA | VQFN-32 | |
| LP5862 | LP5862RSMR | 18 × 2 = 36 | | VQFN-32 | |
| | LP5862DBTR | | | TSSOP-38 | |
| LP5864 | LP5864RSMR | 18 × 4 = 72 | | VQFN-32 | |
| | LP5864MRSMR(1) | | | | |
| LP5866 | LP5866RKPR | 18 × 6 = 108 | | VQFN-40 | |
| | LP5866DBTR | | | TSSOP-38 | |
| | LP5866MDBTR(1) | | | | |
| LP5868 | LP5868RKPR | 18 × 8 = 144 | | VQFN-40 | |
| LP5860 | LP5860RKPR | 18 × 11 = 198 | | VQFN-40 | |
| | LP5860MRKPR(1) | | | | |

(1) Extended Temperature devices, supporting –55°C to approximately 125°C operating ambient temperature.
(2) The same packages are hardware compatible.

Copyright © 2024 Texas Instruments Incorporated

# 5 Pin Configuration and Functions

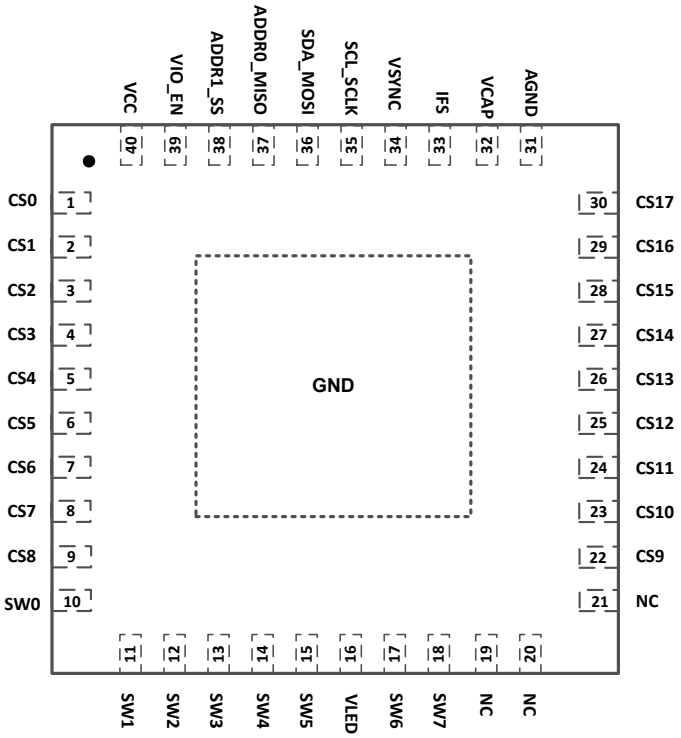


**Figure 5-1. LP5868T RKP Package 40-Pin VQFN with Exposed Thermal Pad Top View**

**Table 5-1. Pin Functions**

| PIN | | I/O | DESCRIPTION |
|---|---|---|---|
| NO. | NAME | | |
| 1 | CS0 | O | Current sink 0. If not used, this pin must be floating. |
| 2 | CS1 | O | Current sink 1. If not used, this pin must be floating. |
| 3 | CS2 | O | Current sink 2. If not used, this pin must be floating. |
| 4 | CS3 | O | Current sink 3. If not used, this pin must be floating. |
| 5 | CS4 | O | Current sink 4. If not used, this pin must be floating. |
| 6 | CS5 | O | Current sink 5. If not used, this pin must be floating. |
| 7 | CS6 | O | Current sink 6. If not used, this pin must be floating. |
| 8 | CS7 | O | Current sink 7. If not used, this pin must be floating. |
| 9 | CS8 | O | Current sink 8. If not used, this pin must be floating. |
| 10 | SW0 | O | High-side PMOS switch output for scan line 0. If not used, this pin must be floating. |
| 11 | SW1 | O | High-side PMOS switch output for scan line 1. If not used, this pin must be floating. |
| 12 | SW2 | O | High-side PMOS switch output for scan line 2. If not used, this pin must be floating. |
| 13 | SW3 | O | High-side PMOS switch output for scan line 3. If not used, this pin must be floating. |
| 14 | SW4 | O | High-side PMOS switch output for scan line 4. If not used, this pin must be floating. |
| 15 | SW5 | O | High-side PMOS switch output for scan line 5. If not used, this pin must be floating. |
| 16 | VLED | Power | Power input for high-side switches. |
| 17 | SW6 | O | High-side PMOS switch output for scan line 6. If not used, this pin must be floating. |
| 18 | SW7 | O | High-side PMOS switch output for scan line 7. If not used, this pin must be floating. |
| 19 | NC | - | No connection. |
| 20 | NC | - | No connection. |
| 21 | NC | - | No connection. |


Copyright © 2024 Texas Instruments Incorporated

**Table 5-1. Pin Functions (continued)**

| PIN | | I/O | DESCRIPTION |
|---|---|---|---|
| NO. | NAME | | |
| 22 | CS9 | O | Current sink 9. If not used, this pin must be floating. |
| 23 | CS10 | O | Current sink 10. If not used, this pin must be floating. |
| 24 | CS11 | O | Current sink 11. If not used, this pin must be floating. |
| 25 | CS12 | O | Current sink 12. If not used, this pin must be floating. |
| 26 | CS13 | O | Current sink 13. If not used, this pin must be floating. |
| 27 | CS14 | O | Current sink 14. If not used, this pin must be floating. |
| 28 | CS15 | O | Current sink 15. If not used, this pin must be floating. |
| 29 | CS16 | O | Current sink 16. If not used, this pin must be floating. |
| 30 | CS17 | O | Current sink 17. If not used, this pin must be floating. |
| 31 | AGND | Ground | Analog ground. Must be connected to exposed thermal pad and common ground plane. |
| 32 | VCAP | O | Internal LDO output. An 1µF capacitor must be connected between this pin with GND. Place the capacitor as close to the device as possible. |
| 33 | IFS | I | Interface type select. $I^2C$ is selected when IFS is low. SPI is selected when IFS is high. A resistor must be connected between VIO and this pin. |
| 34 | VSYNC | I | External synchronize signal for display mode 2 and mode 3. |
| 35 | SCL_SCLK | I | $I^2C$ clock input or SPI clock input. Pull up to VIO when configured as $I^2C$. |
| 36 | SDA_MOSI | I/O | $I^2C$ data input or SPI leader output follower input. Pull up to VIO when configured as $I^2C$. |
| 37 | ADDR0_MISO | I/O | $I^2C$ address select 0 or SPI leader input follower output. |
| 38 | ADDR1_SS | I | $I^2C$ address select 1 or SPI follower select. |
| 39 | VIO_EN | Power,I | Power supply for digital circuits and chip enable. An 1nF capacitor must be connected between this pin with GND and be placed as close to the device as possible. |
| 40 | VCC | Power | Power supply for device. A 1µF capacitor must be connected between this pin with GND and be placed as close to the device as possible. |
| Exposed Thermal Pad | GND | Ground | Must be connected to AGND and common ground plane. |

Copyright © 2024 Texas Instruments Incorporated

# 6 Specifications

## 6.1 Absolute Maximum Ratings

over operating free-air temperature range (unless otherwise noted)[1]

| | | MIN | MAX | UNIT |
|---|---|---|---|---|
| Voltage on $V_{CC}$ / $V_{LED}$ / VIO / EN / CS / SW / SDA / SCL / SCLK / MOSI / MISO / SS / ADDR0 / ADDR1 / VSYNC / IFS | | –0.3 | 6 | V |
| Voltage on VCAP | | –0.3 | 2 | V |
| $T_J$ | Junction temperature | –55 | 150 | °C |
| $T_{stg}$ | Storage temperature | –65 | 150 | °C |

(1) Operation outside the Absolute Maximum Ratings may cause permanent device damage. Absolute Maximum Ratings do not imply functional operation of the device at these or any other conditions beyond those listed under Recommended Operating Conditions. If used outside the Recommended Operating Conditions but within the Absolute Maximum Ratings, the device may not be fully functional, and this may affect device reliability, functionality, performance, and shorten the device lifetime.

## 6.2 ESD Ratings

| | | | VALUE | UNIT |
|---|---|---|---|---|
| $V_{(ESD)}$ | Electrostatic discharge | Human body model (HBM), per ANSI/ESDA/JEDEC JS-001, all pins[1] | ±3000 | V |
| | | Charged device model (CDM), per ANSI/ESDA/JEDEC JS-002, all pins[2] | ±1000 | |

(1) JEDEC document JEP155 states that 500-V HBM allows safe manufacturing with a standard ESD control process.
(2) JEDEC document JEP157 states that 250-V CDM allows safe manufacturing with a standard ESD control process.

## 6.3 Recommended Operating Conditions

over operating free-air temperature range (unless otherwise noted)

| | | MIN | NOM | MAX | UNIT |
|---|---|---|---|---|---|
| Input voltage on $V_{CC}$ | Supply voltage | 2.7 | | 5.5 | V |
| Input voltage on $V_{LED}$ | LED supply voltage | 2.7 | | 5.5 | V |
| Input voltage on VIO_EN | | 1.65 | | 5.5 | V |
| Voltage on SDA / SCL / SCLK / MOSI / MISO / SS / ADDRx / VSYNC / IFS | | | | VIO | V |
| $T_A$ | Operating ambient temperature | –40 | | 85 | °C |
| $T_A$ | Operating ambient temperature - LP5860TMRKPR, LP5866TMRKPR and LP5868TMRKPR | –55 | | 125 | °C |

## 6.4 Thermal Information

| THERMAL METRIC | | LP5860T, LP5868T, LP5866T RKP (VQFN) 40 PINS | UNIT |
|---|---|---|---|
| $R_{\theta JA}$ | Junction-to-ambient thermal resistance | 31.4 | °C/W |
| $R_{\theta JC(top)}$ | Junction-to-case (top) thermal resistance | 22.9 | °C/W |
| $R_{\theta JB}$ | Junction-to-board thermal resistance | 12.0 | °C/W |
| $\Psi_{JT}$ | Junction-to-top characterization parameter | 0.3 | °C/W |
| $\Psi_{JB}$ | Junction-to-board characterization parameter | 12.0 | °C/W |
| $R_{\theta JC(bot)}$ | Junction-to-case (bottom) thermal resistance | 3.5 | °C/W |


Copyright © 2024 Texas Instruments Incorporated

## 6.5 Electrical Characteristics

$V_{CC}$ = 3.3V, $V_{LED}$ = 5V, VIO = 1.8V and $T_A$ = –40°C to +85°C($T_A$ = –55°C to +125°C for LP5860TMRKPR, LP5866TMRKPR and LP5868TMRKPR); Typical values are at $T_A$ = 25°C (unless otherwise specified)

| PARAMETER | | TEST CONDITIONS | MIN | TYP | MAX | UNIT |
|---|---|---|---|---|---|---|
| **Power supplies** | | | | | | |
| $V_{CC}$ | Device supply voltage | | 2.7 | | 5.5 | V |
| $V_{UVR}$ | Undervoltage restart | $V_{CC}$ rising, Test mode | | | 2.5 | V |
| $V_{UVF}$ | Undervoltage shutdown | $V_{CC}$ falling, Test mode | 1.9 | | | V |
| $V_{UV_HYS}$ | Undervoltage shutdown hysteresis | | | 0.3 | | V |
| $V_{CAP}$ | Internal LDO output | $V_{CC}$ = 2.7V to 5.5V | | 1.78 | | V |
| $I_{CC}$ | Shutdown supply current $I_{SHUTDOWN}$ | $V_{EN}$ = 0, CHIP_EN = 0 (bit), ADDx = 0; measure the total current from $V_{CC}$ and $V_{LED}$ | | 0.1 | 1.5 | µA |
| | Standby supply current $I_{STANDBY}$ | $V_{EN}$ = 3.3V, CHIP_EN = 0 (bit), measure the total current from $V_{CC}$ and $V_{LED}$ | | 5.5 | 12 | µA |
| | Active mode supply current $I_{NORMAL}$ | $V_{EN}$ = 3.3V, CHIP_EN = 1 (bit), all channels $I_{OUT}$ = 12.5 mA (MC = 1, CC = 127, DC = 256), measure the current from $V_{CC}$ | | 4.3 | 6 | mA |
| $V_{LED}$ | LED supply voltage | | 2.7 | | 5.5 | V |
| $V_{VIO}$ | VIO supply voltage | | 1.65 | | 5.5 | V |
| $I_{VIO}$ | VIO supply current | Interface idle | | | 5 | µA |
| **Output Stages** | | | | | | |
| $I_{CS}$ | Constant current sink output range (CS0 – CS17) | 2.7 <= $V_{CC}$ < 3.3V, PWM = 100% | 0.1 | | 75 | mA |
| | | $V_{CC}$ >= 3.3V PWM = 100% | 0.1 | | 100 | mA |
| $I_{LKG}$ | Leakage current (CS0 – CS17) | channels off, up_deghost = 0, $V_{CS}$=5V | | 0.1 | 1 | µA |
| $I_{ERR_DD}$ | Device to device current error, $I_{ERR_DD}$ = $(I_{AVE}-I_{SET})/I_{SET}\times100\%$ | All channels ON. Current set to 1 mA. MC = 0 CC = 17 DC = 255 PWM = 100% | –5 | | 5 | % |
| | | All channels ON. Current set to 25 mA. MC = 2 CC = 127 DC = 255 PWM = 100% | –5 | | 5 | % |
| | | All channels ON. Current set to 50 mA. MC = 4 CC = 127 DC = 255 PWM = 100% | -5 | | 5 | % |
| | | All channels ON. Current set to 75 mA. MC=5 CC=64 DC=255 PWM=100% | –5 | | 5 | % |
| | | All channels ON. Current set to 100 mA. MC = 6 CC = 127 DC = 255 PWM = 100% | –5 | | 5 | % |
| $I_{ERR_CC}$ | Channel to channel current error, $I_{ERR_CC}$ = $(I_{OUTX}-I_{AVE})/I_{AVE}\times100\%$ | All channels ON. Current set to 1 mA. MC = 0 CC = 17 DC = 255 PWM = 100% | –5 | | 5 | % |
| | | All channels ON. Current set to 25 mA. MC = 2 CC = 127 DC = 255 PWM = 100% | –5 | | 5 | % |
| | | All channels ON. Current set to 50 mA. MC = 4 CC = 127 DC = 255 PWM = 100% | –5 | | 5 | % |
| | | All channels ON. Current set to 75 mA. MC=5 CC=64 DC=255 PWM=100% | –5 | | 5 | % |
| | | All channels ON. Current set to 100 mA. MC = 6 CC = 127 DC = 255 PWM = 100% | –5 | | 5 | % |
| $f_{PWM}$ | LED PWM frequency | PWM_Fre = 1, PWM = 100% | | 62.5 | | KHz |
| | | PWM_Fre = 0, PWM = 100% | | 125 | | KHz |

$V_{CC}$ = 3.3V, $V_{LED}$ = 5V, VIO = 1.8V and $T_A$ = –40°C to +85°C($T_A$ = –55°C to +125°C for LP5860TMRKPR, LP5866TMRKPR and LP5868TMRKPR); Typical values are at $T_A$ = 25°C (unless otherwise specified)

| PARAMETER | | TEST CONDITIONS | MIN | TYP | MAX | UNIT |
|---|---|---|---|---|---|---|
| $V_{SAT}$ | Output saturation voltage | $I_{OUT}$ = 100mA, decreasing output voltage, when the LED current has dropped 5% (only apply to LP5860TMRKPR, LP5866TMRKPR and LP5868TMRKPR) | | | 0.8 | V |
| | | $I_{OUT}$ = 100mA, decreasing output voltage, when the LED current has dropped 5% (only apply to LP5860TRKPR, LP5866TRKPR and LP5868TRKPR) | | | 0.7 | V |
| | | $I_{OUT}$ = 75mA, decreasing output voltage, when the LED current has dropped 5% | | | 0.6 | V |
| | | $I_{OUT}$ = 25mA, decreasing output voltage, when the LED current has dropped 5% | | | 0.5 | V |
| $R_{SW}$ | High-side PMOS ON resistance | $V_{LED}$ = 2.7 V, $I_{SW}$ = 200 mA | | 450 | | mΩ |
| | | $V_{LED}$ = 2.7 V, $I_{SW}$ = 200 mA, LP5860MRKPR and LP5864MRSMR | | 450 | | mΩ |
| | | $V_{LED}$ = 3.8 V, $I_{SW}$ = 200mA | | 380 | | mΩ |
| | | $V_{LED}$ = 3.8 V, $I_{SW}$ = 200 mA, LP5860MRKPR and LP5864MRSMR | | 380 | | mΩ |
| | | $V_{LED}$ = 5 V, $I_{SW}$ = 200 mA | | 310 | | mΩ |
| | | $V_{LED}$ = 5V, $I_{SW}$ = 200 mA, LP5860MRKPR and LP5864MRSMR | | 310 | | mΩ |
| **Logic Interfaces** | | | | | | |
| $V_{LOGIC_IL}$ | Low-level input voltage, SDA, SCL, SCLK, MOSI, SS, ADDRx, VSYNC, IFS | | | | 0.3 x VIO | V |
| $V_{LOGIC_IH}$ | High-level input voltage, SDA, SCL, SCLK, MOSI, SS, ADDRx, VSYNC, IFS | | 0.7 x VIO | | | V |
| $V_{EN_IL}$ | Low-level input voltage of EN | | | | 0.4 | V |
| $V_{EN_IH}$ | High-level input voltage of EN | When $V_{CAP}$ powered up | 1.4 | | | V |
| $I_{LOGIC_I}$ | Input current, SDA, SCL, SCLK, MOSI, SS, ADDRx | | –1 | | 1 | µA |
| $V_{LOGIC_OL}$ | Low-level output voltage, SDA, MISO | $I_{PULLUP}$ = 3 mA | | | 0.4 | V |
| $V_{LOGIC_OH}$ | High-level output voltage, MISO | $I_{PULLUP}$ = –3 mA | 0.7 x VIO | | | V |
| **Protection Circuits** | | | | | | |
| $V_{LOD_TH}$ | Thershold for channel open detection | | | 0.25 | | V |
| $V_{LSD_TH}$ | Thershold for channel short detection | | | $V_{LED}$ – 1 | | V |
| $T_{TSD}$ | Thermal-shutdown junction temperature | | | 150 | | °C |
| $T_{HYS}$ | Thermal shutdown temperature hysteresis | | | 15 | | °C |

## 6.6 Timing Requirements

| | | MIN | NOM | MAX | UNIT |
|---|---|---|---|---|---|
| **MISC. Timming Requirements** | | | | | |
| $f_{OSC}$ | Internal oscillator frequency | | 31.2 | | MHz |
| $f_{OSC_ERR}$ | Device to device oscillator frequency error | –3% | | 3% | |
| $t_{POR_H}$ | Wait time from UVLO disactive to device NORMAL | | | 500 | µs |
| $t_{CHIP_EN}$ | Wait time from setting Chip_EN (Register) =1 to device NORMAL | | | 100 | µs |
| $t_{RISE}$ | LED output rise time | | 10 | | ns |


Copyright © 2024 Texas Instruments Incorporated

| | | MIN | NOM | MAX | UNIT |
|---|---|---|---|---|---|
| $t_{FALL}$ | LED output fall time | | 15 | | ns |
| $t_{VSYNC_H}$ | The minimum high-level pulse width of VSYNC | 200 | | | µs |
| **SPI timing requirements** | | | | | |
| $f_{SCLK}$ | SPI Clock frequency | | | 12 | MHz |
| 1 | Cycle time | 83.3 | | | ns |
| 2 | SS active lead-time | 50 | | | ns |
| 3 | SS active leg time | 50 | | | ns |
| 4 | SS inactive time | 50 | | | ns |
| 5 | SCLK low time | 36 | | | ns |
| 6 | SCLK high time | 36 | | | ns |
| 7 | MOSI set-up time | 20 | | | ns |
| 8 | MOSI hold time | 20 | | | ns |
| 9 | MISO disable time | | | 30 | ns |
| 10 | MISO data valid time | | | 35 | ns |
| $C_b$ | Bus capacitance | 5 | | 40 | pF |
| **$I^2C$ fast mode timing requirements** | | | | | |
| $f_{SCL}$ | $I^2C$ clock frequency | 0 | | 400 | KHz |
| 1 | Hold time (repeated) START condition | 600 | | | ns |
| 2 | Clock low time | 1300 | | | ns |
| 3 | Clock high time | 600 | | | ns |
| 4 | Setup time for a repeated START condition | 600 | | | ns |
| 5 | Data hold time | 0 | | | ns |
| 6 | Data setup time | 100 | | | ns |
| 7 | Rise time of SDA and SCL | | | 300 | ns |
| 8 | Fall time of SDA and SCL | | | 300 | ns |
| 9 | Setup time for STOP condition | 600 | | | ns |
| 10 | Bus free time between a STOP and a START condition | 1.3 | | | µs |
| **$I^2C$ fast mode plus timing requirements** | | | | | |
| $f_{SCL}$ | $I^2C$ clock frequency | 0 | | 1000 | KHz |
| 1 | Hold time (repeated) START condition | 260 | | | ns |
| 2 | Clock low time | 500 | | | ns |
| 3 | Clock high time | 260 | | | ns |
| 4 | Setup time for a repeated START condition | 260 | | | ns |
| 5 | Data hold time | 0 | | | ns |
| 6 | Data setup time | 50 | | | ns |
| 7 | Rise time of SDA and SCL | | | 120 | ns |
| 8 | Fall time of SDA and SCL | | | 120 | ns |
| 9 | Setup time for STOP condition | 260 | | | ns |
| 10 | Bus free time between a STOP and a START condition | 0.5 | | | µs |

Copyright © 2024 Texas Instruments Incorporated

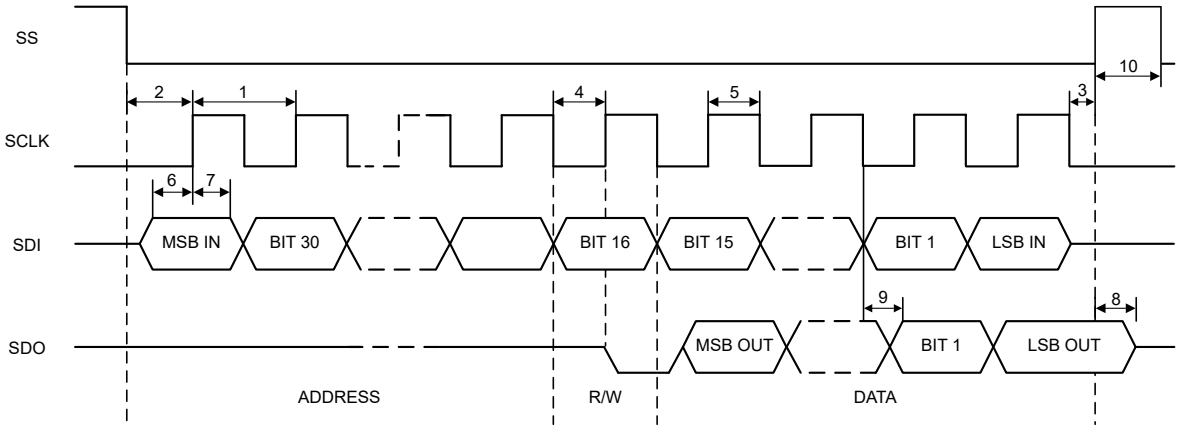


**Figure 6-1. SPI Timing Parameters**

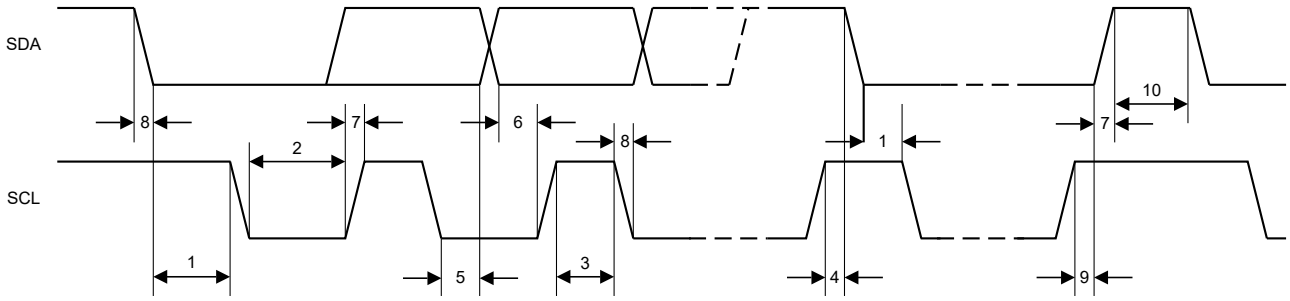


**Figure 6-2. I²C Timing Parameters**


Copyright © 2024 Texas Instruments Incorporated

## 6.7 Typical Characteristics

Unless specified otherwise, typical characteristics apply over the full ambient temperature range (–55°C < $T_A$ < +125°C for LP5868TMRKPR, LP5864MRSMR, and LP5866MDBTR while –40°C < $T_A$ < +85°C for the other devices), $V_{CC}$ = 3.3V, $V_{IO}$ = 3.3V, $V_{LED}$ = 5V, $I_{LED_Peak}$ = 50mA, $C_{VLED}$ = 1µF, $C_{VCC}$ = 1µF.

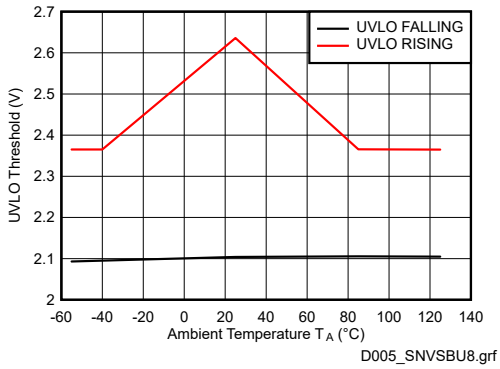


**Figure 6-3. $V_{CC}$ UVLO Rising and Falling Thresholds**

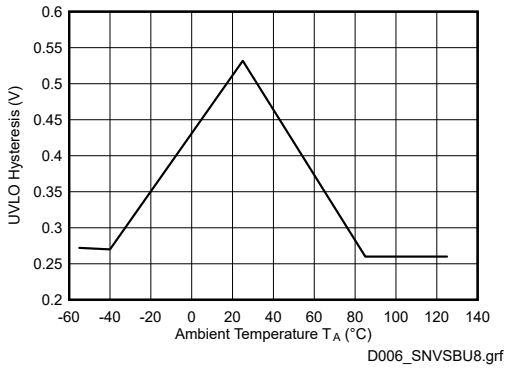


**Figure 6-4. $V_{CC}$ UVLO Hysteresis**

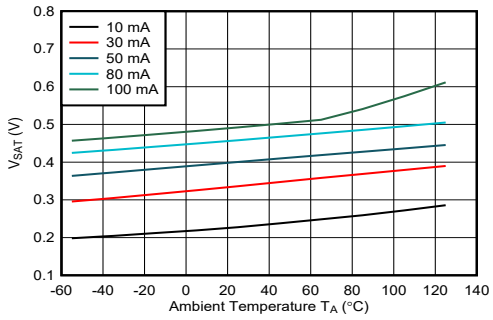


**Figure 6-5. $V_{SAT}$ vs Temperature**

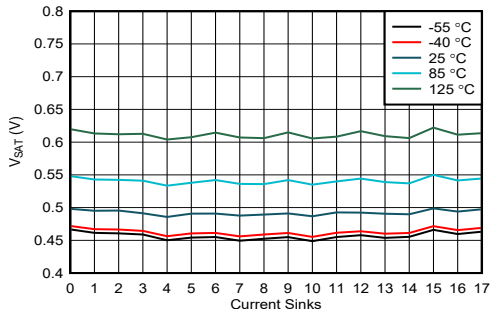


**Figure 6-6. $V_{SAT}$ vs Current Sinks (100mA)**

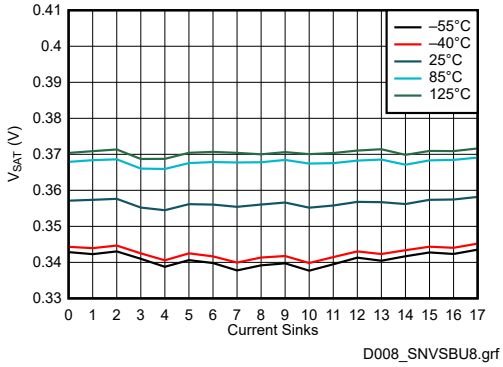


**Figure 6-7. $V_{SAT}$ vs Current Sinks (50mA)**

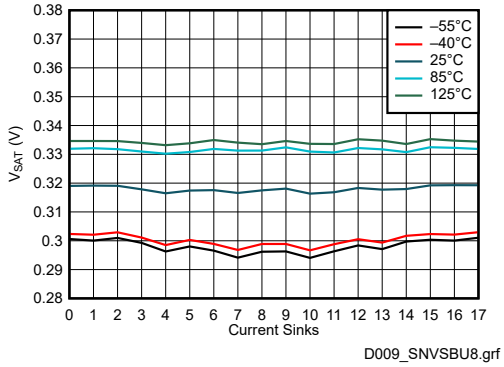


**Figure 6-8. $V_{SAT}$ vs Current Sinks (30mA)**

## 6.7 Typical Characteristics (continued)

Unless specified otherwise, typical characteristics apply over the full ambient temperature range (–55°C < $T_A$ < +125°C for LP5868TMRKPR, LP5864MRSMR, and LP5866MDBTR while –40°C < $T_A$ < +85°C for the other devices), $V_{CC}$ = 3.3V, $V_{IO}$ = 3.3V, $V_{LED}$ = 5V, $I_{LED_Peak}$ = 50mA, $C_{VLED}$ = 1µF, $C_{VCC}$ = 1µF.

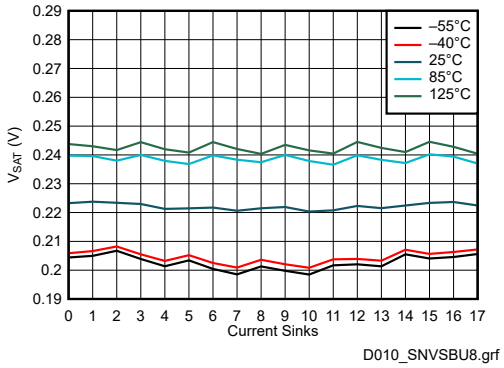


**Figure 6-9. $V_{SAT}$ vs Current Sinks (10mA)**

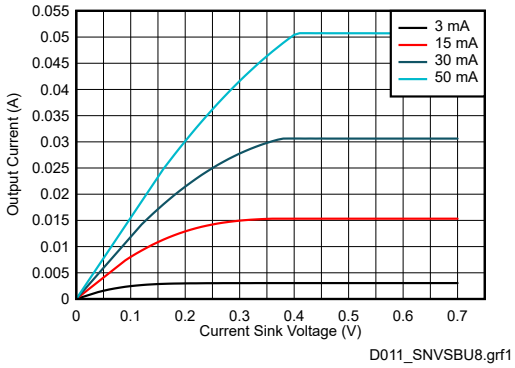


$T_A$ = 25°C

**Figure 6-10. Current Sinks Voltage vs Current**

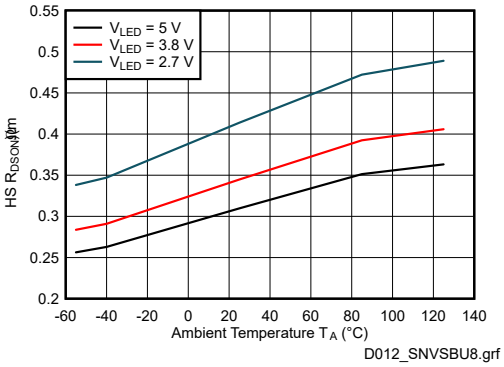


**Figure 6-11. High Side Switch $R_{DSON}$**


Copyright © 2024 Texas Instruments Incorporated

# 7 Detailed Description

## 7.1 Overview

The LP5868T is an 8 × 18 LED matrix driver. The device integrates 8 switching FETs with 18 constant current sinks. One LP5868T device can drive up to 144 LED dots or 48 RGB pixels by using time-multiplexing matrix scheme.

The LP5868T supports both analog dimming and PWM dimming methods. For analog dimming, the current gain of each individual LED dot can be adjusted with 256 steps through 8-bits dot correction. For PWM dimming, the integrated 8-bits or 16-bits configurable, > 20KHz PWM generators for each LED dot enable smooth, vivid animation effects without audible noise. Each LED can also be mapped into a 8-bits group PWM to achieve the group control with minimum data traffic.

The LP5868T device implements full addressable SRAM. The device supports entire SRAM data refresh and partial SRAM data update on demand to minimize the data traffic. The LP5868T implements the ghost cancellation circuit to eliminate both upside and downside ghosting. The LP5868T also uses low brightness compensation technology to support high density LED pixels. Both 1MHz (maximum) $I^2C$ and 12MHz (maximum) SPI interfaces are available in the LP5868T.

## 7.2 Functional Block Diagram

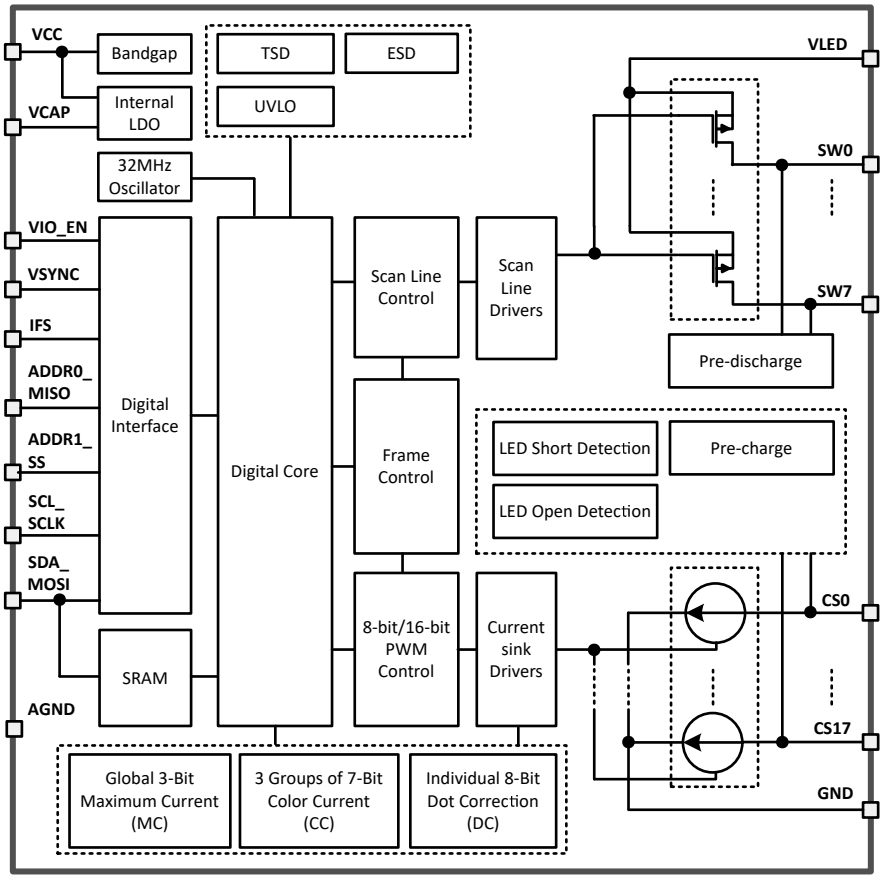

## 7.3 Feature Description

### *7.3.1 Time-Multiplexing Matrix*

The LP5868T device uses a time-multiplexing matrix scheme to support up to 144 LED dots with one chip. The device integrates 18 current sinks with 8 scan lines to drive 18 × 8 = 144 LED dots or 6 × 8 = 48 RGB pixels. In matrix control scheme, the device scans from Line 0 to Line 7 sequentially as shown in Figure 7-1. Current gain and PWM duty registers are programmable for each LED dot to support individual analog and PWM dimming.

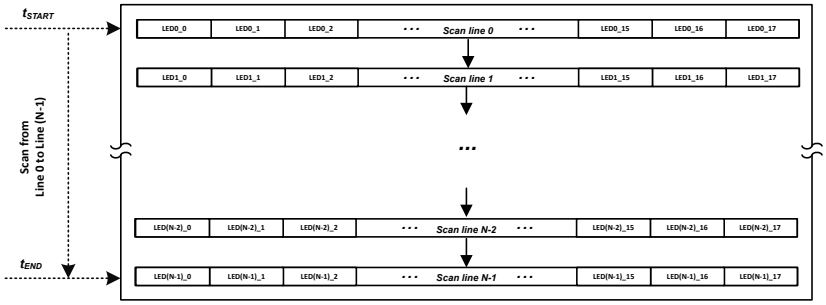


**Figure 7-1. Scan Line Control Scheme**

There are 8 high-side p-channel MOSFETs (PMOS) integrated in LP5868T device. Users can flexibly set the active scan numbers from 6 to 8 by configuring the 'Max_Line_Num' in Dev_initial register. The time-multiplexing matrix timing sequence follows the Figure 7-2.

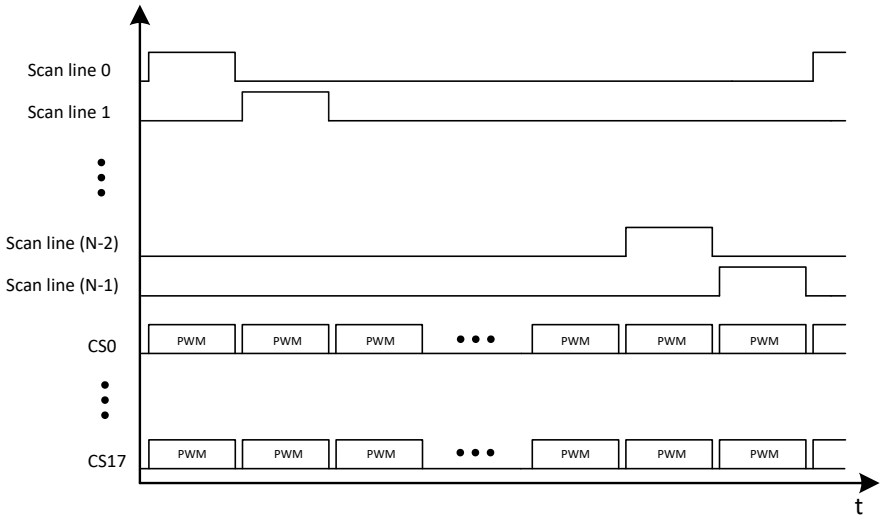


**Figure 7-2. Time-Multiplexing Matrix Timing Sequence**


Copyright © 2024 Texas Instruments Incorporated

One cycle time of the line switching can be calculated as below:

$$t_{line_switch} = t_{PWM} + t_{SW_BLK} + 2 \times t_{phase_shift} \quad (1)$$

- $t_{PWM}$ is the current sink active time, which equals to 8µs (PWM frequency set at 125kHz) or 16µs (PWM frequency set at 62.5kHz) by configuring 'PWM_Fre' in Dev_initial register.
- $t_{SW_BLK}$ is the switch blank time, which equals to 1µs or 0.5µs by configuring 'SW_BLK' in Dev_config1 register.
- $t_{phase_shift}$ is the PWM phase shift time, which equal to 0 or 125ns by configuring 'PWM_Phase_Shift' in Dev_config1 register.

Total display time for one complete sub-period is $t_{sub_period}$ and can be calculated by the following equation:

$$t_{sub_period} = t_{line_switch} \times \text{Scan_line\#} \quad (2)$$

- Scan_line# is the scan line number determined by 'Max_Line_Num' in Dev_initial register.

The time-multiplexing matrix scheme time diagram is shown in Figure 7-3. The $t_{CS_ON_Shift}$ is the current sink turning on shift by configuring 'CS_ON_Shift' bit in Dev_config1 register.

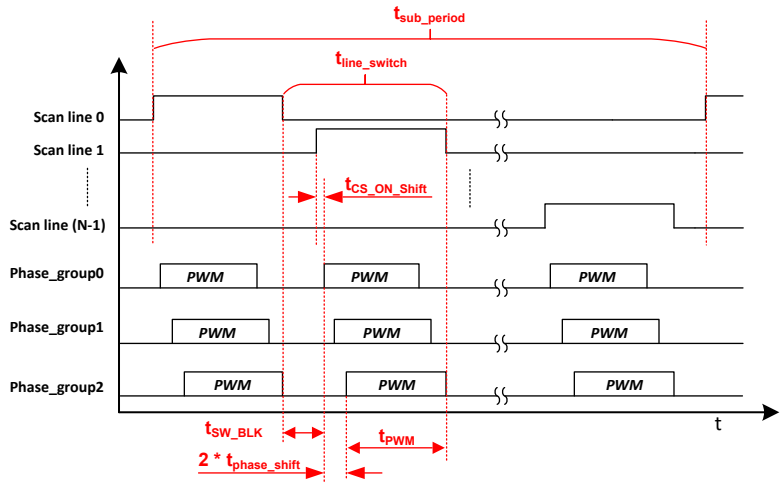


**Figure 7-3. Time-Multiplexing Matrix Timing Diagram**

The LP5868T device implements de-ghosting and low brightness compensation to remove the side effects of matrix topology:

- **De-ghosting**: Both upside de-ghosting and downside de-ghosting are implemented to eliminate the LED's unexpected weak turn-on.
  - Upside_de-ghosting: discharge each scan line during blank state. By configuring the 'Up_Deghost' in Dev_config3 register, the LP5868T discharges and clamps the scan line switch to a certain voltage.
  - Downside_deghosting: pre-charge each current sink voltage during blank state. The de-ghosting capability can be adjusted through the 'Down_Deghost' in Dev_config3 register.
- **Low Brightness Compensation**: three groups compensation are implemented to overcome the color-shift and non-uniformity in low brightness conditions. The compensation capability can be through 'Comp_Group1', 'Comp_Group2', and 'Comp_Group3' in Dev_config2 register.
  - Compensation_group 1: CS0, CS3, CS6, CS9, CS12, CS15.
  - Compensation_group 2: CS1, CS4, CS7, CS10, CS13, CS16.
  - Compensation_group 3: CS2, CS5, CS8, CS11, CS14, CS17.

Copyright © 2024 Texas Instruments Incorporated

### 7.3.2 Analog Dimming (Current Gain Control)

Analog dimming of LP5868T is achieved by configuring the current gain control. There are several methods to control the current gain of each LED.

- Global 3-bits Maximum Current (MC) setting without external resistor
- 3 Groups of 7-bits Color Current (CC) setting
- Individual 8-bit Dot Current (DC) setting

**Note**

When setting to small output current in low brightness situation, adjusting MC to a small value firstly can get smaller output saturation voltage.

#### 7.3.2.1 Global 3-Bits Maximum Current (MC) Setting

The MC is used to set the maximum current $I_{OUT_MAX}$ for each current sink, and this current is the maximum peak current for each LED dot. The MC can be set with 7 steps from 7.5 mA to 100 mA. When the device is powered on, the MC data is set to default value, which is 37.5 mA.

For data refresh Mode 1, MC data is effective immediately after new data is updated. For Mode 2 and Mode 3, to avoid unexpected MC data change during high speed data refreshing, MC data must be changed when all channels are off and new MC data is only updated when the 'Chip_EN' bit in Chip_en register is set to 0, and after the 'Chip_EN' returns to 1, the new MC data is effective. 'Down_Deghost' and 'Up_Deghost' in Dev_config3 work in the similar way with MC.

**Table 7-1. Maximum Current (MC) Register Setting**

| 3-BITS MAXIMUM_CURRENT REGISTER | | $I_{OUT_MAX}$ |
|---|---|---|
| **Binary** | **Decimal** | **mA** |
| 000 | 0 | 7.5 |
| 001 | 1 | 12.5 |
| 010 | 2 | 25 |
| 011 (Default) | 3 (Default) | 37.5 (Default) |
| 100 | 4 | 50 |
| 101 | 5 | 75 |
| 110 | 6 | 100 |


Copyright © 2024 Texas Instruments Incorporated

#### 7.3.2.2 3 Groups of 7-Bits Color Current (CC) Setting

The LP5868T device is able to adjust the output current of three color groups separately. For each color, the device has 7-bits data in 'CC_Group1', 'CC_Group2', and 'CC_Group3'. Thus, all color group currents can be adjusted in 128 steps from 0% to 100% of the maximum output current, $I_{OUT_MAX}$.

The 18 current sinks have fixed mapping to the three color groups:

- CC-Group 1: CS0, CS3, CS6, CS9, CS12, CS15.
- CC-Group 2: CS1, CS4, CS7, CS10, CS13, CS16.
- CC-Group 3: CS2, CS5, CS8, CS11, CS14, CS17.

**Table 7-2. 3 Groups of 7-bits Color Current (CC) Setting**

| 7-BITS CC_GROUP1/CC_GROUP2/CC_GROUP3 REGISTER | | RATIO OF OUTPUT CURRENT TO $I_{OUT_MAX}$ |
|---|---|---|
| **Binary** | **Decimal** | **%** |
| 000 0000 | 0 | 0 |
| 000 0001 | 1 | 0.79 |
| 000 0010 | 2 | 1.57 |
| - - - | - - - | - - - |
| 100 0000 (default) | 64 (default) | 50.4 (default) |
| - - - | - - - | - - - |
| 111 1101 | 125 | 98.4 |
| 111 1110 | 126 | 99.2 |
| 111 1111 | 127 | 100 |

Copyright © 2024 Texas Instruments Incorporated

#### 7.3.2.3 Individual 8-bit Dot Current (DC) Setting

The LP5868T can individually adjust the output current of each LED by using dot current function through DC setting. The device allows the brightness deviations of the LEDs to adjusted be individually. Each output DC is programmed with an 8-bit depth, so the value can be adjusted with 256 steps within the range from 0% to 100% of ($I_{OUT_MAX}$ × CC/127).

**Table 7-3. Individual 8-bit Dot Current (DC) Setting**

| 8-BIT DC REGISTER | | RATIO OF OUTPUT CURRENT TO $I_{OUT_MAX}$ × CC/127 |
|---|---|---|
| **Binary** | **Decimal** | **%** |
| 0000 0000 | 0 | 0 |
| 0000 0001 | 1 | 0.39 |
| 0000 0010 | 2 | 0.78 |
| - - - | - - - | - - - |
| 1000 0000 (Default) | 128 (Default) | 50.2 (Default) |
| - - - | - - - | - - - |
| 1111 1101 | 253 | 99.2 |
| 1111 1110 | 254 | 99.6 |
| 1111 1111 | 255 | 100 |

In summary, the current gain of each current sink can be calculated as below:

$$I_{OUT}\ (mA) = I_{OUT_MAX} \times (CC/127) \times (DC/255) \quad (3)$$

For time-multiplexing scan scheme, if the scan number is N, each LED dot's average current $I_{AVG}$ is shown as below:

$$I_{AVG}\ (mA) = I_{OUT}/N = I_{OUT_MAX} \times (CC/127) \times (DC/255)/N \quad (4)$$


Copyright © 2024 Texas Instruments Incorporated

### 7.3.3 PWM Dimming

There are several methods to control the PWM duty cycle of each LED dot.

#### 7.3.3.1 Individual 8-Bit / 16-Bit PWM for Each LED Dot

Every LED has an individual 8-bit or 16-bit PWM register that is used to change the LED brightness by PWM duty. The LP5868T uses an enhanced spectrum PWM (ES-PWM) algoithm to achieve 16-bit depth with high refresh rate and this can avoid flicker under high speed camera. Comparing with conventional 8-bit PWM, 16-bit PWM can help to achieve ultimate high dimming resolution in LED animation applications.

#### 7.3.3.2 Programmable Groups of 8-Bit PWM Dimming

The group PWM Control is used to select LEDs into 1 to 3 groups while each group has a separate register for PWM control. Every LED has 2-bit selection in LED_DOT_GROUP Registers (x = 0, 1, … , 39) to select whether the LED dot belongs to one of the three groups or not:

- 00: not a member of any group
- 01: member of group 1
- 10: member of group 2
- 11: member of group 3

#### 7.3.3.3 8-Bit PWM for Global Dimming

The Global PWM Control function affects all LEDs simultaneously.

The final PWM duty cycle can be calculated as below:

$$\text{PWM_Final(8-bit)} = \text{PWM_Individual(8-bit)} \times \text{PWM_Group(8-bit)} \times \text{PWM_ Global(8-bit)} \quad (5)$$

$$\text{PWM_Final(16-bit)} = \text{PWM_Individual(16-bit)} \times \text{PWM_Group(8-bit)} \times \text{PWM_ Global(8-bit)} \quad (6)$$

The LP5868T supports 125kHz or 62.5kHz PWM output frequency. The PWM frequency is selected by configuring the 'PWM_Fre' in Dev_initial register. An internal 31.2MHz oscillator is used for generating PWM outputs. The oscillator's high accuracy design ($f_{OSC_ERR}$ ≤ ± 3%) enables a better synchronization if multiple LP5868T devices are connected together.

A PWM phase-shifting scheme is implemented in each current sink to avoid the current overshot when turning on simultaneously. As the LED drivers are not activated simultaneously, the peak load current from the pre-stage power supply is significantly decreased. This scheme also reduces input-current ripple and ceramic-capacitor audible ringing. LED drivers are grouped into three different phases. By configuring the 'PWM_Phase_Shift' in Dev_config1 register, which is default off, the LP5868T supports $t_{phase_shift}$ = 125ns shifting time shown in Figure 7-4.

- Phase 1: CS0, CS3, CS6, CS9, CS12, CS15.
- Phase 2: CS1, CS4, CS7, CS10, CS13, CS16.
- Phase 3: CS2, CS5, CS8, CS11, CS14, CS17.

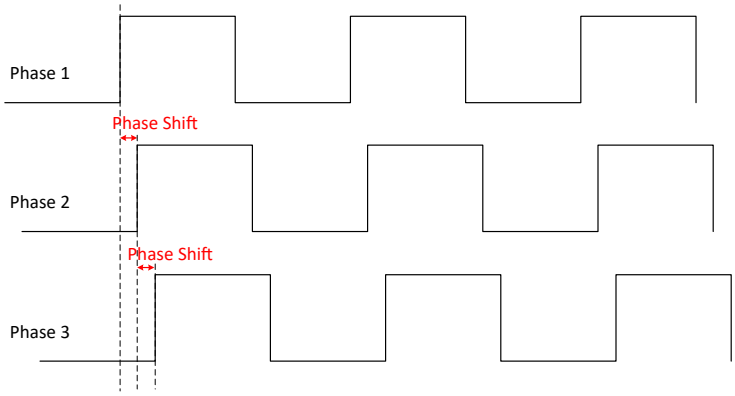


**Figure 7-4. Phase Shift**

To avoid high current sinks output ripple during line switching, current sinks can be configured to turn on with 1 clock delay (62.5ns or 31.25ns according to the PWM frequency) after lines turn on, as shown in Figure 7-3. This function can be configured by 'CS_ON_Shift' in Dev_config1 register.

The LP5868T allows users to configure the dimming scale either exponentially (Gamma Correction) or linearly through the 'PWM_Scale_Mode' in Dev_config1 register. If a human-eye-friendly dimming curve is desired, using the internal fixed exponential scale is an easy approach. If a special dimming curve is desired, using the linear scale with software correction is recommended. The LP5868T supports both linear and exponential dimming curves under 8-bit and 16-bit PWM depth. Figure 7-5 is an example of 8-bit PWM depth.

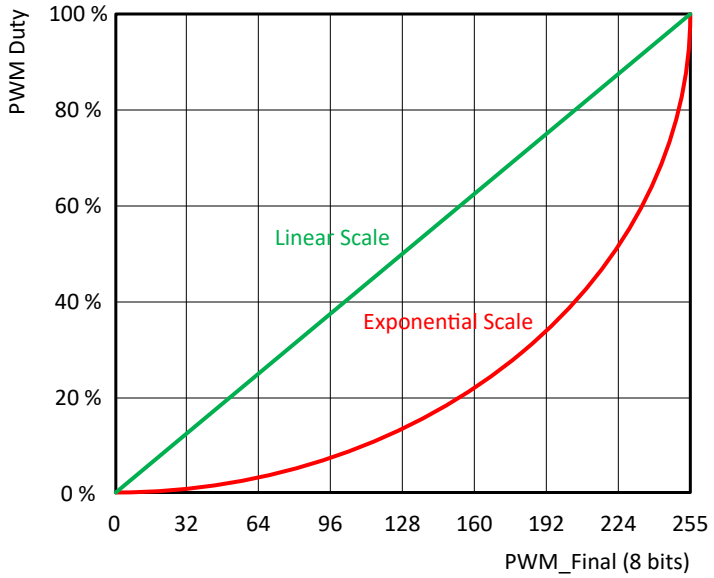


**Figure 7-5. Linear and Exponential Dimming Curves**

In summary, the PWM control method is illustrated as Figure 7-6:

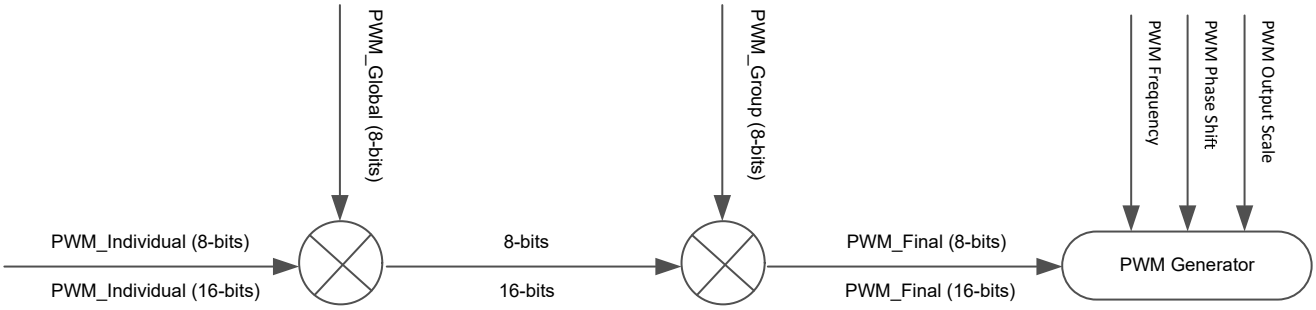


**Figure 7-6. PWM Control Scheme**


Copyright © 2024 Texas Instruments Incorporated

### 7.3.4 ON and OFF Control

The LP5868T device supports the individual ON and OFF control of each LED. For indication purpose, users can turn on and off the LED directly by writing 1-bit ON and OFF data to the corresponding Dot_onoffx (x = 0, 1, … , 23) register.

### 7.3.5 Data Refresh Mode

The LP5868T supports three data refresh modes: Mode 1, Mode 2, and Mode 3, by configuring 'Data_Ref_Mode' in Dev_initial register.

**Mode 1**: 8-bit PWM data without VSYNC command. Data is sent out for display instantly after received. With Mode1, users can refresh the corresponding dots' data only instead of updating the whole SRAM. It is called 'on demand data refresh', which can save the total data volume effectively. As shown in Figure 7-7, the red LED dots can be refreshed after sending the corresponding data while the others kept the same with last frame.

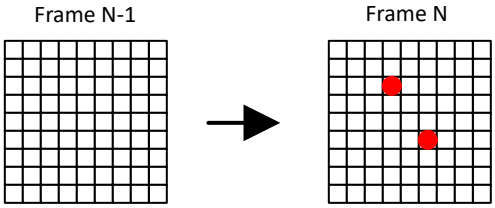


**Figure 7-7. On Demand Data Refresh - Mode 1**

**Mode 2**: 8-bit PWM data with VSYNC command. Data is held and sent out simultaneously by frame after receiving the VSYNC command.

**Mode 3**: 16-bit PWM data with VSYNC command. Data is held and sent out simultaneously by frame after receiving the VSYNC command.

Frame control is implemented in Mode 2 and Mode 3. Instead of refreshing the output instantly after data is received (Mode 1), the device holds the data and refreshes the whole frame data by a fixed frame rate, $f_{VSYNC}$. Usually, 24Hz, 50Hz, 60Hz, 120Hz or even higher frame rate is selected to achieve vivid animation effects. Whole SRAM Data Refresh is shown in Figure 7-8, a new frame is updated after receiving the VSYNC command.

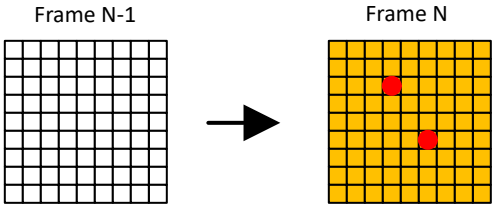


**Figure 7-8. Whole SRAM Data Refresh**

Comparing with Mode 1, Mode 2 and Mode 3 provide a better synchronization when multiple LP5868T devices used together. A high-level pulse width longer than $t_{SYNC_H}$ is required at the beginning of each VSYNC frame. Figure 7-9 shows the VSYNC connections and Figure 7-10 shows the timing requirements.

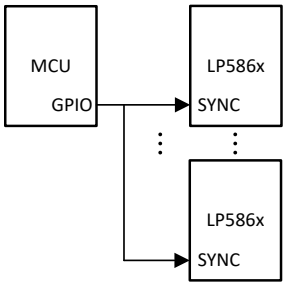


**Figure 7-9. Multiple Devices Sync**

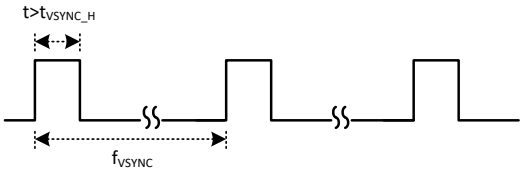


**Figure 7-10. VSYNC Timing**

Table 8-4 is the summary of the 3 data refresh modes.

**Table 7-4. Data Refresh Mode**

| MODE TYPE | PWM RESOLUTION | PWM OUTPUT | EXTERNAL VSYNC |
|---|---|---|---|
| Mode 1 | 8 Bits | Data update instantly | No |
| Mode 2 | 8 Bits | Data update by frame | Yes |
| Mode 3 | 16 Bits | | |

### *7.3.6 Full Addressable SRAM*

SRAM is implemented inside the LP5868T device to support data writing and reading at the same time.

Although data refresh mechanisms are not the same for Mode 1 and Mode 2/3, the data writing and reading follow the same method. Uses can update partial of the SRAM data only or the whole SRAM page simultaneously. The LP5868T supports auto-increment function to minimize data traffic and increase data transfer efficiency.

Please be noted that 16-bit PWM (Mode 3) and 8-bit PWM (Mode 1 and Mode 2) are assigned with different SRAM addresses.


Copyright © 2024 Texas Instruments Incorporated

### *7.3.7 Protections and Diagnostics*

#### 7.3.7.1 LED Open Detection

The LP5868T includes LED open detection (LOD) for the fault caused by any opened LED dot. The threshold for LED open is 0.25V typical. LED open detection is only performed when PWM ≥ 25 (Mode 1 and Mode 2) or PWM ≥ 6400 (Mode 3) and voltage on CSn is detected lower than open threshold for continuously 4 sub-periods.

Figure 7-11 shows the detection circuit of LOD function. When open fault is detected, 'Global_LOD' bit in Fault_state register is set to 1 and detailed fault state for each LED is also monitored in register Dot_lodx (x = 0, 1, … , 23). All open fault indicator bits can be cleared by setting LOD_clear = 0Fh after the open condition is removed.

LOD removal function can be enabled by setting 'LOD_removal' bit in Dev_config2 register to 1. This function turns off the current sink of the open channel when scanning to the line where the opened LED is included.

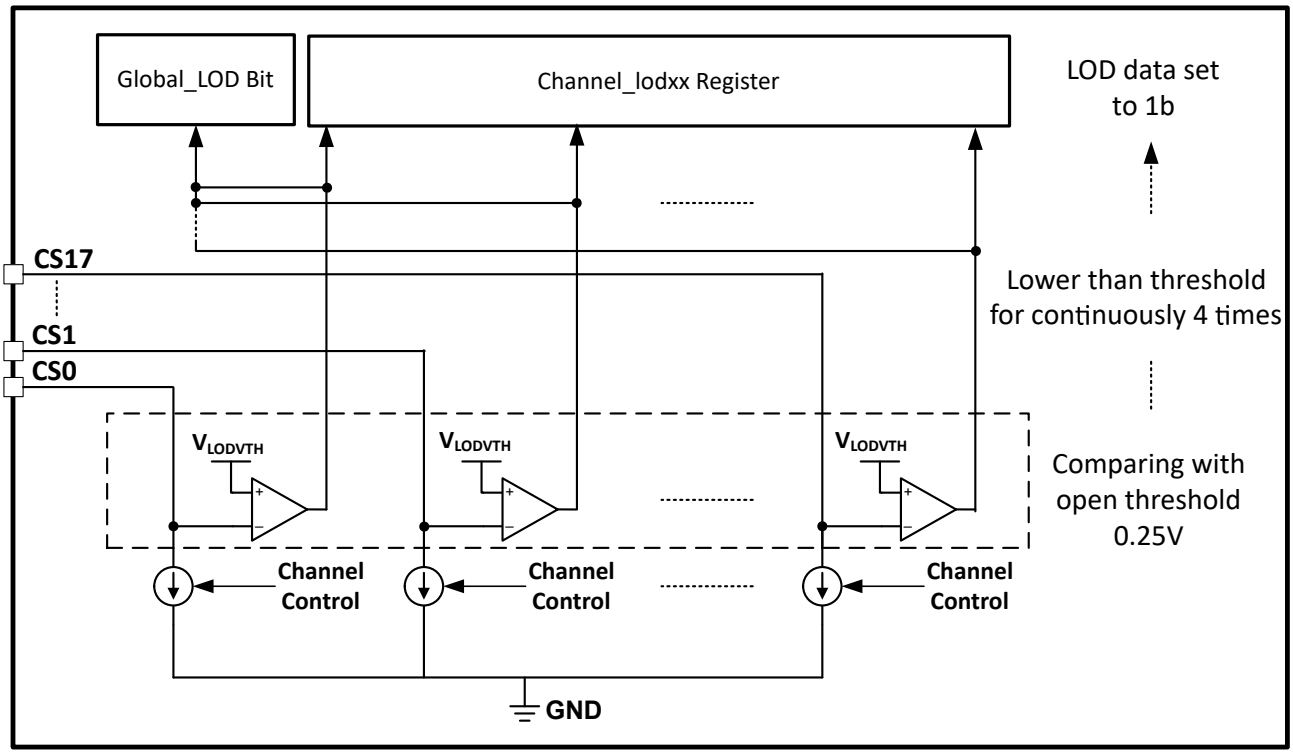


**Figure 7-11. LOD Circuits**

#### 7.3.7.2 LED Short Detection

The LP5868T includes LED short detection (LSD) for the fault caused by any shorted LED. Threshold for channel short is (VLED – 1) V typical. LED short detection only performed when PWM ≥ 25 (Mode 1 and Mode 2) or PWM ≥ 6400 (Mode 3) and voltage on CSn is detected higher than short threshold for continuously 4 sub-periods. As there is parasitic capacitance for the current sink, to make sure the LSD result is correct, setting the LED current higher than 0.5mA is recommended.

The image below shows the detection circuit of LSD function. When short fault is detected, 'Global_LSD bit' in Fault_state register is set to 1 and detailed fault state for every channel are also monitored in register Dot_lsdx (x = 0, 1, … , 23). All short fault indicator bits can be cleared by setting LSD_clear = 0Fh after the short condition is removed.

LSD removal function can be enabled by setting 'LSD_removal' bit in Dev_config2 register to 1. This function turns off the upside deghosting function of the scan line where short LED is included.

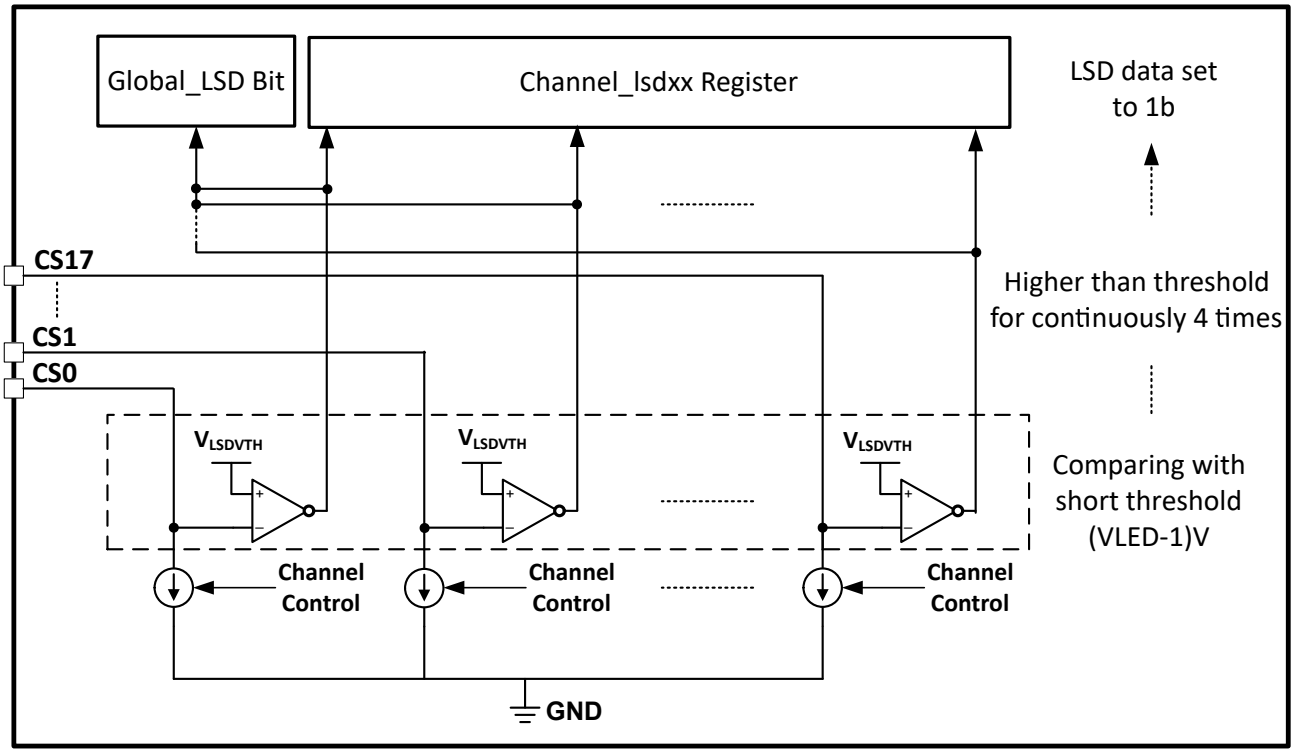


**Figure 7-12. LSD Circuit**

#### 7.3.7.3 Thermal Shutdown

The LP5868T device implements thermal shutdown mechanism to protect the device from damage due to overheating. When the junction temperature rises to 160°C (typical) and above, the device switches into shutdown mode. The LP5868T exits thermal shutdown when the junction temperature of the device drops to 145°C (typical) and below.

#### 7.3.7.4 UVLO (Under Voltage Lock Out)

The LP5868T has an internal comparator that monitors the voltage at VCC. When VCC is below $V_{UVF}$, reset is active and the LP5868T enters INITIALIZATION state.


Copyright © 2024 Texas Instruments Incorporated

## 7.4 Device Functional Modes

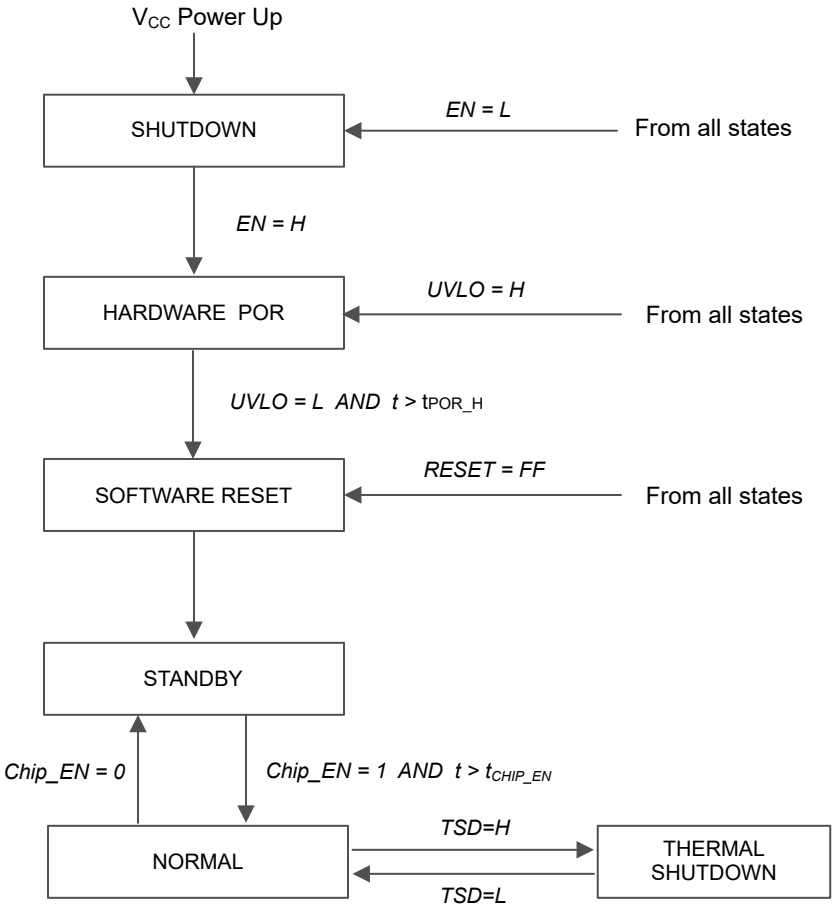


**Figure 7-13. Device Functional Modes**

- SHUTDOWN: The device enters into SHUTDOWN mode from all states on VCC power up or EN pin is low.
- HARDWARE POR: The device enters into HARDWARE POR when Enable pin is high or VCC fall under $V_{UVF}$ causing UVLO=H from all states.
- SOFTWARE RESET: The device enters into SOFTWARE RESET mode when VCC rise higher than $V_{UVR}$ with the time t > $t_{POR_H}$. In this mode, all the registers are reset. Entry can also be from any state when the RESET (register) = FFh or UVLO is low.
- STANDBY: The device enters the STANDBY mode when Chip_EN (register) = 0. In this mode, device enters into low power mode, but the $I^2C$/SPI are still available for Chip_EN only and the registers' data are retained.
- NORMAL: The device enters the NORMAL mode when 'Chip_EN' = 1 with the time t > $t_{CHIP_EN}$.
- THERMAL SHUTDOWN: The device automatically enters the THERMAL SHUTDOWN mode when the junction temperature exceeds 160°C (typical). If the junction temperature decreases below 145°C (typical), the device returns to the NORMAL mode.

## 7.5 Programming

### *7.5.1 Interface Selection*

The LP5868T supports two communication interfaces: $I^2C$ and SPI. If IFS is high, ithe device enters into SPI mode. If IFS is low, the device enters into $I^2C$ mode.

**Table 7-5. Interface Selection**

| INTERFACE TYPE | ENTRY CONDITION |
|---|---|
| $I^2C$ | IFS = Low |
| SPI | IFS = High |

### *7.5.2 $I^2C$ Interface*

The LP5868T is compatible with $I^2C$ standard specification. The device supports both fast mode (400KHz maximum) and fast plus mode (1MHz maximum).

#### 7.5.2.1 $I^2C$ Data Transactions

The data on SDA line must be stable during the HIGH period of the clock signal (SCL). In other words, state of the data line can only be changed when clock signal is LOW. START and STOP conditions classify the beginning and the end of the data transfer session. A START condition is defined as the SDA signal transitioning from HIGH to LOW while SCL line is HIGH. A STOP condition is defined as the SDA transitioning from LOW to HIGH while SCL is HIGH. The bus leader always generates START and STOP conditions. The bus is considered to be busy after a START condition and free after a STOP condition. During data transmission, the bus leader can generate repeated START conditions. First START and repeated START conditions are functionally equivalent.

Each byte of data has to be followed by an acknowledge bit. The acknowledge related clock pulse is generated by the leader. The leader releases the SDA line (HIGH) during the acknowledge clock pulse. The device pulls down the SDA line during the $9^{th}$ clock pulse, signifying an acknowledge. The device generates an acknowledge after each byte has been received.

There is one exception to the acknowledge after every byte rule. When the leader is the receiver, it must indicate to the transmitter an end of data by not acknowledging (*negative acknowledge*) the last byte clocked out of the follower. This negative acknowledge still includes the acknowledge clock pulse (generated by the leader), but the SDA line is not pulled down.


Copyright © 2024 Texas Instruments Incorporated

#### 7.5.2.2 I²C Data Format

The address and data bits are transmitted MSB first with 8-bits length format in each cycle. Each transmission is started with Address Byte 1, which are divided into 5-bits of the chip address, 2 higher bits of the register address, and 1 read/write bit. The other 8 lower bits of register address are put in Address Byte 2.The device supports both independent mode and broadcast mode. The auto-increment feature allows writing / reading several consecutive registers within one transmission. If not consecutive, a new transmission must be started.

**Table 7-6. I²C Data Format**

| Address Byte1 | Chip Address | | | | | Register Address | | R/W |
|---|---|---|---|---|---|---|---|---|
| | Bit 7 | Bit 6 | Bit 5 | Bit 4 | Bit 3 | Bit 2 | Bit 1 | Bit 0 |
| Independent | 1 | 0 | 0 | ADDR1 | ADDR0 | 9th bit | 8th bit | R: 1 W: 0 |
| Broadcast | 1 | 0 | 1 | 0 | 1 | | | |
| Address Byte2 | Register Address | | | | | | | |
| | Bit 7 | Bit 6 | Bit 5 | Bit 4 | Bit 3 | Bit 2 | Bit 1 | Bit 0 |
| | 7th bit | 6th bit | 5th bit | 4th bit | 3th bit | 2th bit | 1th bit | 0th bit |

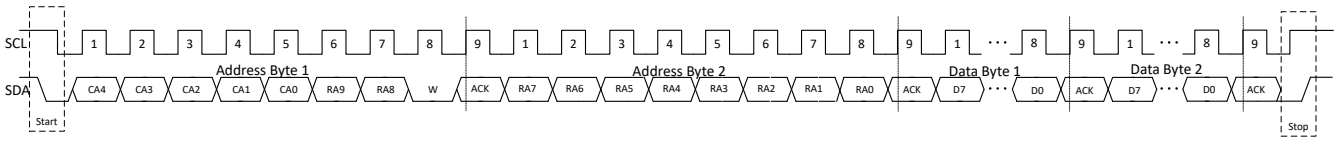


**Figure 7-14. I²C Write Timming**

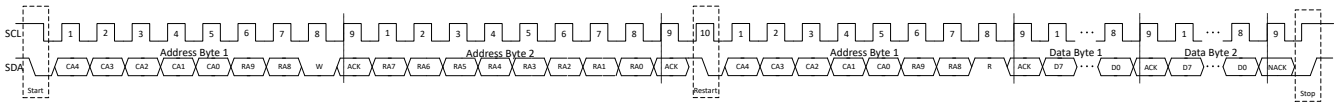


**Figure 7-15. I²C Read Timing**

#### 7.5.2.3 Multiple Devices Connection

The LP5868T enters into I²C mode if IFS is connected to GND. The ADDR0/1 pin is used to select the unique I²C follower address for each device. The SCL and SDA lines must each have a pullup resistor (4.7KΩ for 400KHz, 2KΩ for 1MHz) placed somewhere on the line and remain HIGH even when the bus is idle. VIO_EN can either be connected with VIO power supply or GPIO. It's suggested to put one 1nF cap as closer to VIO_EN pin as possible. Up to four LP5868T follower devices can share the same I²C bus by the different ADDR configurations.

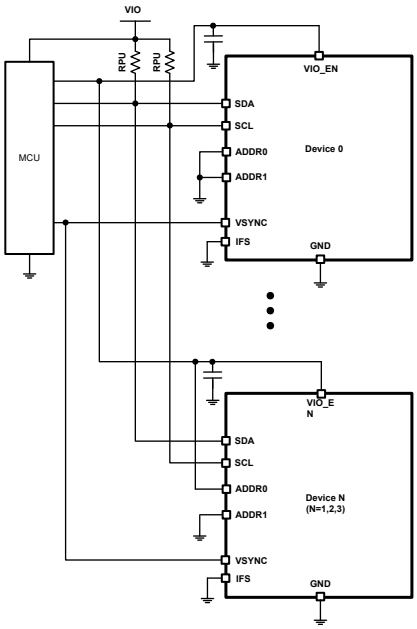


**Figure 7-16. I²C Multiple Devices Connection**


Copyright © 2024 Texas Instruments Incorporated

### *7.5.3 Programming*

#### 7.5.3.1 SPI Data Transactions

MISO output is normally in a high impedance state. When the follower-select pin SS for the device is active (low) the MISO output is pulled low for read only. During write cycle MISO stays in high-impedance state. The follower-select signal SS must be low during the cycle transmission. SS resets the interface when high. Data is clocked in on the rising edge of the SCLK clock signal, while data is clocked out on the falling edge of SCLK.

#### 7.5.3.2 SPI Data Format

The address and data bits are transmitted MSB first with 8-bits length format in each cycle. Each transmission is started with Address Byte 1, which contains 8 higher bits of the register address. The Address Byte 2 is started with 2 lower bits of the register address and 1 read/write bit. The auto-increment feature allows writing / reading several consecutive registers within one transmission. If not consecutive, a new transmission must be started.

**Table 7-7. SPI Data Format**

| **Address Byte1** | **Register Address** | | | | | | | |
|---|---|---|---|---|---|---|---|---|
| | **Bit 7** | **Bit 6** | **Bit 5** | **Bit 4** | **Bit 3** | **Bit 2** | **Bit 1** | **Bit 0** |
| | 9th bit | 8th bit | 7th bit | 6th bit | 5th bit | 4th bit | 3th bit | 2th bit |
| **Address Byte2** | **Register Address** | | | | | | | |
| | **Bit 7** | **Bit 6** | **Bit 5** | **Bit 4** | **Bit 3** | **Bit 2** | **Bit 1** | **Bit 0** |
| | 1th bit | 0th bit | R: 0 W: 1 | Don't Care | | | | |

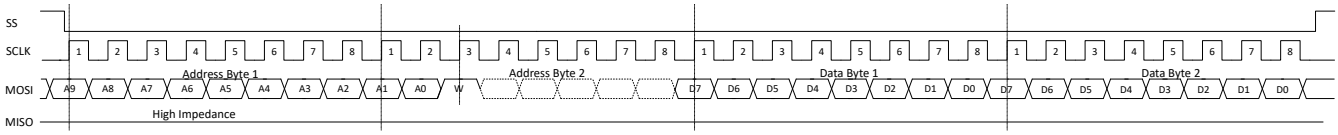


**Figure 7-17. SPI Write Timing**

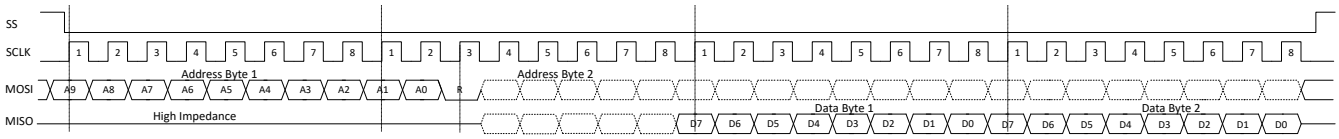


**Figure 7-18. SPI Read Timing**

#### 7.5.3.3 Multiple Devices Connection

The device enters into SPI mode if IFS is pulled high to VIO through a pullup resistor(4.7KΩ recommended). VIO_EN can either be connected with VIO power supply or GPIO. It's suggested to put one 1nF cap as closer to VIO_EN pin as possible. In SPI mode host can address as many devices as there are follower select pins on host.

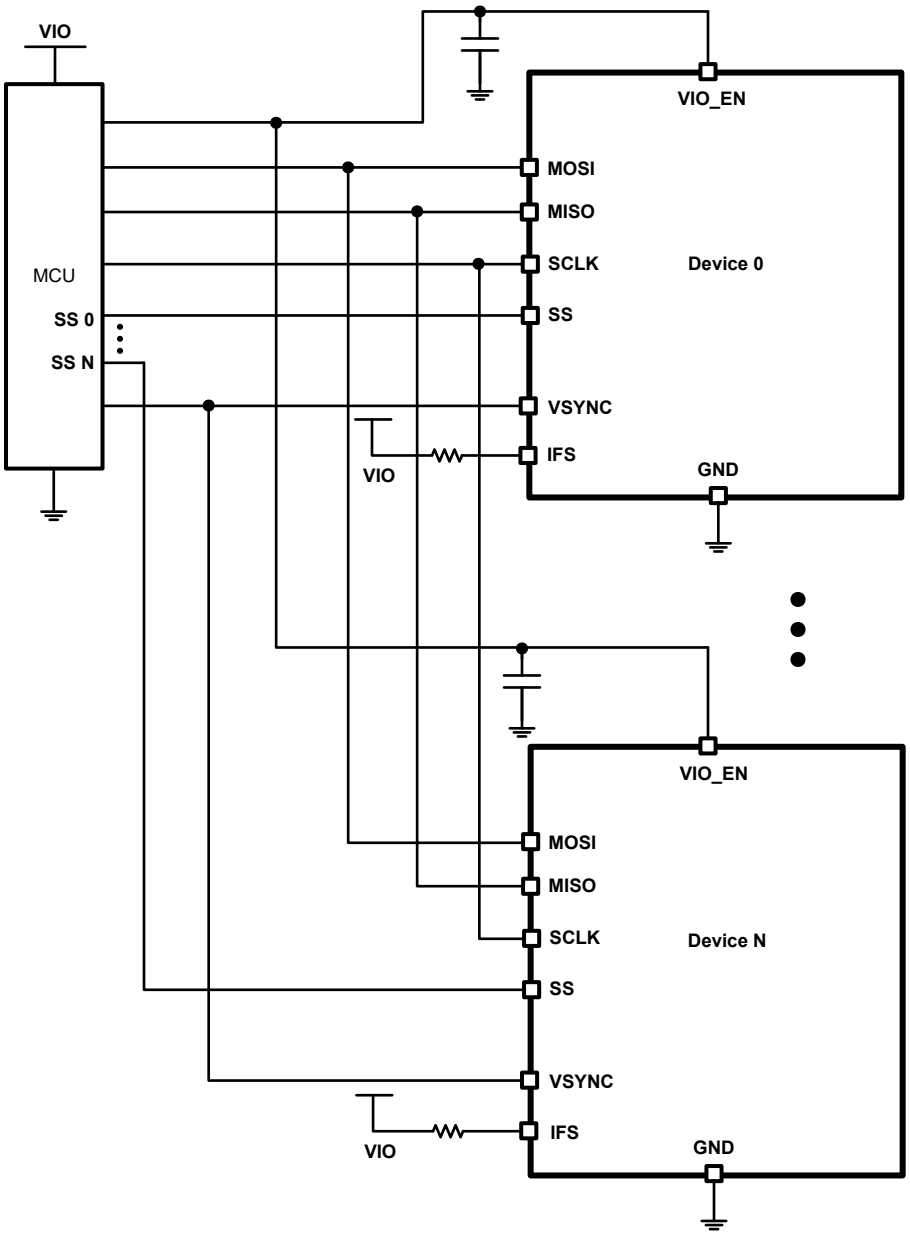


**Figure 7-19. SPI Multiple Devices Connection**


Copyright © 2024 Texas Instruments Incorporated

## 7.6 Register Maps

This section provides a summary of the register maps. For detailed register functions and descriptions, please refer to *LP5868T 11x18 LED Matrix Driver Register Maps*.

**Table 7-8. Register Section/Block Access Type Codes**

| Access Type | Code | Description |
|---|---|---|
| **Read Type** | | |
| R | R | Read |
| RC | R<br>C | Read<br>to Clear |
| R-0 | R<br>-0 | Read<br>Returns 0 |
| **Write Type** | | |
| W | W | Write |
| W0CP | W<br>0C<br>P | W<br>0 to clear<br>Requires privileged access |
| Reset or Default Value | | |
| *-n* | | Value after reset or the default value |

| Register Acronym | Address | Type | D7 | D6 | D5 | D4 | D3 | D2 | D1 | D0 | Default |
|---|---|---|---|---|---|---|---|---|---|---|---|
| **Chip_en** | 000h | R/W | Reserved | | | | | | | Chip_EN | 00h |
| **Dev_initial** | 001h | R/W | Reserved | Max_Line_Num | | | | Data_Ref_Mode | | PWM_Fre | 5Eh |
| **Dev_config1** | 002h | R/W | Reserved | Reserved | Reserved | Reserved | SW_BLK | PWM_Scale_Mode | PWM_Phase_Shift | CS_ON_Shift | 00h |
| **Dev_config2** | 003h | R/W | Comp_Group3 | | Comp_Group2 | | Comp_Group1 | | LOD_removal | LSD_removal | 00h |
| **Dev_config3** | 004h | R/W | Down_Deghost | | Up_Deghost | | Maximum_Current | | | Up_Deghost_enable | 47h |
| **Global_bri** | 005h | R/W | PWM_Global | | | | | | | | FFh |
| **Group0_bri** | 006h | R/W | PWM_Group1 | | | | | | | | FFh |
| **Group1_bri** | 007h | R/W | PWM_Group2 | | | | | | | | FFh |
| **Group2_bri** | 008h | R/W | PWM_Group3 | | | | | | | | FFh |
| **R_current_set** | 009h | R/W | Reserved | CC_Group1 | | | | | | | 40h |
| **G_current_set** | 00Ah | R/W | Reserved | CC_Group2 | | | | | | | 40h |
| **B_current_set** | 00Bh | R/W | Reserved | CC_Group3 | | | | | | | 40h |
| **Dot_grp_sel0** | 00Ch | R/W | Dot L0-CS3 group | | Dot L0-CS2 group | | Dot L0-CS1 group | | Dot L0-CS0 group | | 00h |
| **Dot_grp_sel1** | 00Dh | R/W | Dot L0-CS7 group | | Dot L0-CS6 group | | Dot L0-CS5 group | | Dot L0-CS4 group | | 00h |
| **Dot_grp_sel2** | 00Eh | R/W | Dot L0-CS11 group | | Dot L0-CS10 group | | Dot L0-CS9 group | | Dot L0-CS8 group | | 00h |
| **Dot_grp_sel3** | 00Fh | R/W | Dot L0-CS15 group | | Dot L0-CS14 group | | Dot L0-CS13 group | | Dot L0-CS12 group | | 00h |
| **Dot_grp_sel4** | 010h | R/W | Reserved | | | | Dot L0-CS17 group | | Dot L0-CS16 group | | 00h |
| **Dot_grp_sel5** | 011h | R/W | Dot L1-CS3 group | | Dot L1-CS2 group | | Dot L1-CS1 group | | Dot L1-CS0 group | | 00h |
| **Dot_grp_sel6** | 012h | R/W | Dot L1-CS7 group | | Dot L1-CS6 group | | Dot L1-CS5 group | | Dot L1-CS4 group | | 00h |
| **Dot_grp_sel7** | 013h | R/W | Dot L1-CS11 group | | Dot L1-CS10 group | | Dot L1-CS9 group | | Dot L1-CS8 group | | 00h |
| **Dot_grp_sel8** | 014h | R/W | Dot L1-CS15 group | | Dot L1-CS14 group | | Dot L1-CS13 group | | Dot L1-CS12 group | | 00h |
| **Dot_grp_sel9** | 015h | R/W | Reserved | | | | Dot L1-CS17 group | | Dot L1-CS16 group | | 00h |
| **Dot_grp_sel10** | 016h | R/W | Dot L2-CS3 group | | Dot L2-CS2 group | | Dot L2-CS1 group | | Dot L2-CS0 group | | 00h |

Copyright © 2024 Texas Instruments Incorporated

| Register Acronym | Address | Type | D7 | D6 | D5 | D4 | D3 | D2 | D1 | D0 | Default |
|---|---|---|---|---|---|---|---|---|---|---|---|
| **Dot_grp_sel11** | 017h | R/W | Dot L2-CS7 group | | Dot L2-CS6 group | | Dot L2-CS5 group | | Dot L2-CS4 group | | 00h |
| **Dot_grp_sel12** | 018h | R/W | Dot L2-CS11 group | | Dot L2-CS10 group | | Dot L2-CS9 group | | Dot L2-CS8 group | | 00h |
| **Dot_grp_sel13** | 019h | R/W | Dot L2-CS15 group | | Dot L2-CS14 group | | Dot L2-CS13 group | | Dot L2-CS12 group | | 00h |
| **Dot_grp_sel14** | 01Ah | R/W | Reserved | | | | Dot L2-CS17 group | | Dot L2-CS16 group | | 00h |
| **Dot_grp_sel15** | 01Bh | R/W | Dot L3-CS3 group | | Dot L3-CS2 group | | Dot L3-CS1 group | | Dot L3-CS0 group | | 00h |
| **Dot_grp_sel16** | 01Ch | R/W | Dot L3-CS7 group | | Dot L3-CS6 group | | Dot L3-CS5 group | | Dot L3-CS4 group | | 00h |
| **Dot_grp_sel17** | 01Dh | R/W | Dot L3-CS11 group | | Dot L3-CS10 group | | Dot L3-CS9 group | | Dot L3-CS8 group | | 00h |
| **Dot_grp_sel18** | 01Eh | R/W | Dot L3-CS15 group | | Dot L3-CS14 group | | Dot L3-CS13 group | | Dot L3-CS12 group | | 00h |
| **Dot_grp_sel19** | 01Fh | R/W | Reserved | | | | Dot L3-CS17 group | | Dot L3-CS16 group | | 00h |
| **Dot_grp_sel20** | 020h | R/W | Dot L4-CS3 group | | Dot L4-CS2 group | | Dot L4-CS1 group | | Dot L4-CS0 group | | 00h |
| **Dot_grp_sel21** | 021h | R/W | Dot L4-CS7 group | | Dot L4-CS6 group | | Dot L4-CS5 group | | Dot L4-CS4 group | | 00h |
| **Dot_grp_sel22** | 022h | R/W | Dot L4-CS11 group | | Dot L4-CS10 group | | Dot L4-CS9 group | | Dot L4-CS8 group | | 00h |
| **Dot_grp_sel23** | 023h | R/W | Dot L4-CS15 group | | Dot L4-CS14 group | | Dot L4-CS13 group | | Dot L4-CS12 group | | 00h |
| **Dot_grp_sel24** | 024h | R/W | Reserved | | | | Dot L4-CS17 group | | Dot L4-CS16 group | | 00h |
| **Dot_grp_sel25** | 025h | R/W | Dot L5-CS3 group | | Dot L5-CS2 group | | Dot L5-CS1 group | | Dot L5-CS0 group | | 00h |
| **Dot_grp_sel26** | 026h | R/W | Dot L5-CS7 group | | Dot L5-CS6 group | | Dot L5-CS5 group | | Dot L5-CS4 group | | 00h |
| **Dot_grp_sel27** | 027h | R/W | Dot L5-CS11 group | | Dot L5-CS10 group | | Dot L5-CS9 group | | Dot L5-CS8 group | | 00h |
| **Dot_grp_sel28** | 028h | R/W | Dot L5-CS15 group | | Dot L5-CS14 group | | Dot L5-CS13 group | | Dot L5-CS12 group | | 00h |
| **Dot_grp_sel29** | 029h | R/W | Reserved | | | | Dot L5-CS17 group | | Dot L5-CS16 group | | 00h |
| **Dot_grp_sel30** | 02Ah | R/W | Dot L6-CS3 group | | Dot L6-CS2 group | | Dot L6-CS1 group | | Dot L6-CS0 group | | 00h |
| **Dot_grp_sel31** | 02Bh | R/W | Dot L6-CS7 group | | Dot L6-CS6 group | | Dot L6-CS5 group | | Dot L6-CS4 group | | 00h |
| **Dot_grp_sel32** | 02Ch | R/W | Dot L6-CS11 group | | Dot L6-CS10 group | | Dot L6-CS9 group | | Dot L6-CS8 group | | 00h |
| **Dot_grp_sel33** | 02Dh | R/W | Dot L6-CS15 group | | Dot L6-CS14 group | | Dot L6-CS13 group | | Dot L6-CS12 group | | 00h |
| **Dot_grp_sel34** | 02Eh | R/W | Reserved | | | | Dot L6-CS17 group | | Dot L6-CS16 group | | 00h |
| **Dot_grp_sel35** | 02Fh | R/W | Dot L7-CS3 group | | Dot L7-CS2 group | | Dot L7-CS1 group | | Dot L7-CS0 group | | 00h |
| **Dot_grp_sel36** | 030h | R/W | Dot L7-CS7 group | | Dot L7-CS6 group | | Dot L7-CS5 group | | Dot L7-CS4 group | | 00h |
| **Dot_grp_sel37** | 031h | R/W | Dot L7-CS11 group | | Dot L7-CS10 group | | Dot L7-CS9 group | | Dot L7-CS8 group | | 00h |
| **Dot_grp_sel38** | 032h | R/W | Dot L7-CS15 group | | Dot L7-CS14 group | | Dot L7-CS13 group | | Dot L7-CS12 group | | 00h |
| **Dot_grp_sel39** | 033h | R/W | Reserved | | | | Dot L7-CS17 group | | Dot L7-CS16 group | | 00h |
| **Dot_onoff0** | 043h | R/W | Dot L0-CS7 onoff | Dot L0-CS6 onoff | Dot L0-CS5 onoff | Dot L0-CS4 onoff | Dot L0-CS3 onoff | Dot L0-CS2 onoff | Dot L0-CS1 onoff | Dot L0-CS0 onoff | FFh |
| **Dot_onoff1** | 044h | R/W | Dot L0-CS15 onoff | Dot L0-CS14 onoff | Dot L0-CS13 onoff | Dot L0-CS12 onoff | Dot L0-CS11 onoff | Dot L0-CS10 onoff | Dot L0-CS9 onoff | Dot L0-CS8 onoff | FFh |
| **Dot_onoff2** | 045h | R/W | Reserved | | | | | | Dot L0-CS17 onoff | Dot L0-CS16 onoff | 03h |
| **Dot_onoff3** | 046h | R/W | Dot L1-CS7 onoff | Dot L1-CS6 onoff | Dot L1-CS5 onoff | Dot L1-CS4 onoff | Dot L1-CS3 onoff | Dot L1-CS2 onoff | Dot L1-CS1 onoff | Dot L1-CS0 onoff | FFh |
| **Dot_onoff4** | 047h | R/W | Dot L1-CS15 onoff | Dot L1-CS14 onoff | Dot L1-CS13 onoff | Dot L1-CS12 onoff | Dot L1-CS11 onoff | Dot L1-CS10 onoff | Dot L1-CS9 onoff | Dot L1-CS8 onoff | FFh |
| **Dot_onoff5** | 048h | R/W | Reserved | | | | | | Dot L1-CS17 onoff | Dot L1-CS16 onoff | 03h |
| **Dot_onoff6** | 049h | R/W | Dot L2-CS7 onoff | Dot L2-CS6 onoff | Dot L2-CS5 onoff | Dot L2-CS4 onoff | Dot L2-CS3 onoff | Dot L2-CS2 onoff | Dot L2-CS1 onoff | Dot L2-CS0 onoff | FFh |


Copyright © 2024 Texas Instruments Incorporated

| Register Acronym | Address | Type | D7 | D6 | D5 | D4 | D3 | D2 | D1 | D0 | Default |
|---|---|---|---|---|---|---|---|---|---|---|---|
| **Dot_onoff7** | 04Ah | R/W | Dot L2-CS15 onoff | Dot L2-CS14 onoff | Dot L2-CS13 onoff | Dot L2-CS12 onoff | Dot L2-CS11 onoff | Dot L2-CS10 onoff | Dot L2-CS9 onoff | Dot L2-CS8 onoff | FFh |
| **Dot_onoff8** | 04Bh | R/W | Reserved | | | | | | Dot L2-CS17 onoff | Dot L2-CS16 onoff | 03h |
| **Dot_onoff9** | 04Ch | R/W | Dot L3-CS7 onoff | Dot L3-CS6 onoff | Dot L3-CS5 onoff | Dot L3-CS4 onoff | Dot L3-CS3 onoff | Dot L3-CS2 onoff | Dot L3-CS1 onoff | Dot L3-CS0 onoff | FFh |
| **Dot_onoff10** | 04Dh | R/W | Dot L3-CS15 onoff | Dot L3-CS14 onoff | Dot L3-CS13 onoff | Dot L3-CS12 onoff | Dot L3-CS11 onoff | Dot L3-CS10 onoff | Dot L3-CS9 onoff | Dot L3-CS8 onoff | FFh |
| **Dot_onoff11** | 04Eh | R/W | Reserved | | | | | | Dot L3-CS17 onoff | Dot L3-CS16 onoff | 03h |
| **Dot_onoff12** | 04Fh | R/W | Dot L4-CS7 onoff | Dot L4-CS6 onoff | Dot L4-CS5 onoff | Dot L4-CS4 onoff | Dot L4-CS3 onoff | Dot L4-CS2 onoff | Dot L4-CS1 onoff | Dot L4-CS0 onoff | FFh |
| **Dot_onoff13** | 050h | R/W | Dot L4-CS15 onoff | Dot L4-CS14 onoff | Dot L4-CS13 onoff | Dot L4-CS12 onoff | Dot L4-CS11 onoff | Dot L4-CS10 onoff | Dot L4-CS9 onoff | Dot L4-CS8 onoff | FFh |
| **Dot_onoff14** | 051h | R/W | Reserved | | | | | | Dot L4-CS17 onoff | Dot L4-CS16 onoff | 03h |
| **Dot_onoff15** | 052h | R/W | Dot L5-CS7 onoff | Dot L5-CS6 onoff | Dot L5-CS5 onoff | Dot L5-CS4 onoff | Dot L5-CS3 onoff | Dot L5-CS2 onoff | Dot L5-CS1 onoff | Dot L5-CS0 onoff | FFh |
| **Dot_onoff16** | 053h | R/W | Dot L5-CS15 onoff | Dot L5-CS14 onoff | Dot L5-CS13 onoff | Dot L5-CS12 onoff | Dot L5-CS11 onoff | Dot L5-CS10 onoff | Dot L5-CS9 onoff | Dot L5-CS8 onoff | FFh |
| **Dot_onoff17** | 054h | R/W | Reserved | | | | | | Dot L5-CS17 onoff | Dot L5-CS16 onoff | 03h |
| **Dot_onoff18** | 055h | R/W | Dot L6-CS7 onoff | Dot L6-CS6 onoff | Dot L6-CS5 onoff | Dot L6-CS4 onoff | Dot L6-CS3 onoff | Dot L6-CS2 onoff | Dot L6-CS1 onoff | Dot L6-CS0 onoff | FFh |
| **Dot_onoff19** | 056h | R/W | Dot L6-CS15 onoff | Dot L6-CS14 onoff | Dot L6-CS13 onoff | Dot L6-CS12 onoff | Dot L6-CS11 onoff | Dot L6-CS10 onoff | Dot L6-CS9 onoff | Dot L6-CS8 onoff | FFh |
| **Dot_onoff20** | 057h | R/W | Reserved | | | | | | Dot L6-CS17 onoff | Dot L6-CS16 onoff | 03h |
| **Dot_onoff21** | 058h | R/W | Dot L7-CS7 onoff | Dot L7-CS6 onoff | Dot L7-CS5 onoff | Dot L7-CS4 onoff | Dot L7-CS3 onoff | Dot L7-CS2 onoff | Dot L7-CS1 onoff | Dot L7-CS0 onoff | FFh |
| **Dot_onoff22** | 059h | R/W | Dot L7-CS15 onoff | Dot L7-CS14 onoff | Dot L7-CS13 onoff | Dot L7-CS12 onoff | Dot L7-CS11 onoff | Dot L7-CS10 onoff | Dot L7-CS9 onoff | Dot L7-CS8 onoff | FFh |
| **Dot_onoff23** | 05Ah | R/W | Reserved | | | | | | Dot L7-CS17 onoff | Dot L7-CS16 onoff | 03h |
| **Fault_state** | 064h | R | Reserved | | | | | | Global_LOD | Global_LSD | 00h |
| **Dot_lod0** | 065h | R | Dot L0-CS7 LOD | Dot L0-CS6 LOD | Dot L0-CS5 LOD | Dot L0-CS4 LOD | Dot L0-CS3 LOD | Dot L0-CS2 LOD | Dot L0-CS1 LOD | Dot L0-CS0 LOD | 00h |
| **Dot_lod1** | 066h | R | Dot L0-CS15 LOD | Dot L0-CS14 LOD | Dot L0-CS13 LOD | Dot L0-CS12 LOD | Dot L0-CS11 LOD | Dot L0-CS10 LOD | Dot L0-CS9 LOD | Dot L0-CS8 LOD | 00h |
| **Dot_lod2** | 067h | R | Reserved | | | | | | Dot L0-CS17 LOD | Dot L0-CS16 LOD | 00h |

Copyright © 2024 Texas Instruments Incorporated

| Register Acronym | Address | Type | D7 | D6 | D5 | D4 | D3 | D2 | D1 | D0 | Default |
|---|---|---|---|---|---|---|---|---|---|---|---|
| **Dot_lod3** | 068h | R | Dot L1-CS7 LOD | Dot L1-CS6 LOD | Dot L1-CS5 LOD | Dot L1-CS4 LOD | Dot L1-CS3 LOD | Dot L1-CS2 LOD | Dot L1-CS1 LOD | Dot L1-CS0 LOD | 00h |
| **Dot_lod4** | 069h | R | Dot L1-CS15 LOD | Dot L1-CS14 LOD | Dot L1-CS13 LOD | Dot L1-CS12 LOD | Dot L1-CS11 LOD | Dot L1-CS10 LOD | Dot L1-CS9 LOD | Dot L1-CS8 LOD | 00h |
| **Dot_lod5** | 06Ah | R | Reserved | | | | | | Dot L1-CS17 LOD | Dot L1-CS16 LOD | 00h |
| **Dot_lod6** | 06Bh | R | Dot L2-CS7 LOD | Dot L2-CS6 LOD | Dot L2-CS5 LOD | Dot L2-CS4 LOD | Dot L2-CS3 LOD | Dot L2-CS2 LOD | Dot L2-CS1 LOD | Dot L2-CS0 LOD | 00h |
| **Dot_lod7** | 06Ch | R | Dot L2-CS15 LOD | Dot L2-CS14 LOD | Dot L2-CS13 LOD | Dot L2-CS12 LOD | Dot L2-CS11 LOD | Dot L2-CS10 LOD | Dot L2-CS9 LOD | Dot L2-CS8 LOD | 00h |
| **Dot_lod8** | 06Dh | R | Reserved | | | | | | Dot L2-CS17 LOD | Dot L2-CS16 LOD | 00h |
| **Dot_lod9** | 06Eh | R | Dot L3-CS7 LOD | Dot L3-CS6 LOD | Dot L3-CS5 LOD | Dot L3-CS4 LOD | Dot L3-CS3 LOD | Dot L3-CS2 LOD | Dot L3-CS1 LOD | Dot L3-CS0 LOD | 00h |
| **Dot_lod10** | 06Fh | R | Dot L3-CS15 LOD | Dot L3-CS14 LOD | Dot L3-CS13 LOD | Dot L3-CS12 LOD | Dot L3-CS11 LOD | Dot L3-CS10 LOD | Dot L3-CS9 LOD | Dot L3-CS8 LOD | 00h |
| **Dot_lod11** | 070h | R | Reserved | | | | | | Dot L3-CS17 LOD | Dot L3-CS16 LOD | 00h |
| **Dot_lod12** | 071h | R | Dot L4-CS7 LOD | Dot L4-CS6 LOD | Dot L4-CS5 LOD | Dot L4-CS4 LOD | Dot L4-CS3 LOD | Dot L4-CS2 LOD | Dot L4-CS1 LOD | Dot L4-CS0 LOD | 00h |
| **Dot_lod13** | 072h | R | Dot L4-CS15 LOD | Dot L4-CS14 LOD | Dot L4-CS13 LOD | Dot L4-CS12 LOD | Dot L4-CS11 LOD | Dot L4-CS10 LOD | Dot L4-CS9 LOD | Dot L4-CS8 LOD | 00h |
| **Dot_lod14** | 073h | R | Reserved | | | | | | Dot L4-CS17 LOD | Dot L4-CS16 LOD | 00h |
| **Dot_lod15** | 074h | R | Dot L5-CS7 LOD | Dot L5-CS6 LOD | Dot L5-CS5 LOD | Dot L5-CS4 LOD | Dot L5-CS3 LOD | Dot L5-CS2 LOD | Dot L5-CS1 LOD | Dot L5-CS0 LOD | 00h |
| **Dot_lod16** | 075h | R | Dot L5-CS15 LOD | Dot L5-CS14 LOD | Dot L5-CS13 LOD | Dot L5-CS12 LOD | Dot L5-CS11 LOD | Dot L5-CS10 LOD | Dot L5-CS9 LOD | Dot L5-CS8 LOD | 00h |
| **Dot_lod17** | 076h | R | Reserved | | | | | | Dot L5-CS17 LOD | Dot L5-CS16 LOD | 00h |
| **Dot_lod18** | 077h | R | Dot L6-CS7 LOD | Dot L6-CS6 LOD | Dot L6-CS5 LOD | Dot L6-CS4 LOD | Dot L6-CS3 LOD | Dot L6-CS2 LOD | Dot L6-CS1 LOD | Dot L6-CS0 LOD | 00h |
| **Dot_lod19** | 078h | R | Dot L6-CS15 LOD | Dot L6-CS14 LOD | Dot L6-CS13 LOD | Dot L6-CS12 LOD | Dot L6-CS11 LOD | Dot L6-CS10 LOD | Dot L6-CS9 LOD | Dot L6-CS8 LOD | 00h |
| **Dot_lod20** | 079h | R | Reserved | | | | | | Dot L6-CS17 LOD | Dot L6-CS16 LOD | 00h |
| **Dot_lod21** | 07Ah | R | Dot L7-CS7 LOD | Dot L7-CS6 LOD | Dot L7-CS5 LOD | Dot L7-CS4 LOD | Dot L7-CS3 LOD | Dot L7-CS2 LOD | Dot L7-CS1 LOD | Dot L7-CS0 LOD | 00h |
| **Dot_lod22** | 07Bh | R | Dot L7-CS15 LOD | Dot L7-CS14 LOD | Dot L7-CS13 LOD | Dot L7-CS12 LOD | Dot L7-CS11 LOD | Dot L7-CS10 LOD | Dot L7-CS9 LOD | Dot L7-CS8 LOD | 00h |
| **Dot_lod23** | 07Ch | R | Reserved | | | | | | Dot L7-CS17 LOD | Dot L7-CS16 LOD | 00h |


Copyright © 2024 Texas Instruments Incorporated

| Register Acronym | Address | Type | D7 | D6 | D5 | D4 | D3 | D2 | D1 | D0 | Default |
|---|---|---|---|---|---|---|---|---|---|---|---|
| **Dot_lsd0** | 086h | R | Dot L0-CS7 LSD | Dot L0-CS6 LSD | Dot L0-CS5 LSD | Dot L0-CS4 LSD | Dot L0-CS3 LSD | Dot L0-CS2 LSD | Dot L0-CS1 LSD | Dot L0-CS0 LSD | 00h |
| **Dot_lsd1** | 087h | R | Dot L0-CS15 LSD | Dot L0-CS14 LSD | Dot L0-CS13 LSD | Dot L0-CS12 LSD | Dot L0-CS11 LSD | Dot L0-CS10 LSD | Dot L0-CS9 LSD | Dot L0-CS8 LSD | 00h |
| **Dot_lsd2** | 088h | R | Reserved | | | | | | Dot L0-CS17 LSD | Dot L0-CS16 LSD | 00h |
| **Dot_lsd3** | 089h | R | Dot L1-CS7 LSD | Dot L1-CS6 LSD | Dot L1-CS5 LSD | Dot L1-CS4 LSD | Dot L1-CS3 LSD | Dot L1-CS2 LSD | Dot L1-CS1 LSD | Dot L1-CS0 LSD | 00h |
| **Dot_lsd4** | 08Ah | R | Dot L1-CS15 LSD | Dot L1-CS14 LSD | Dot L1-CS13 LSD | Dot L1-CS12 LSD | Dot L1-CS11 LSD | Dot L1-CS10 LSD | Dot L1-CS9 LSD | Dot L1-CS8 LSD | 00h |
| **Dot_lsd5** | 08Bh | R | Reserved | | | | | | Dot L1-CS17 LSD | Dot L1-CS16 LSD | 00h |
| **Dot_lsd6** | 08Ch | R | Dot L2-CS7 LSD | Dot L2-CS6 LSD | Dot L2-CS5 LSD | Dot L2-CS4 LSD | Dot L2-CS3 LSD | Dot L2-CS2 LSD | Dot L2-CS1 LSD | Dot L2-CS0 LSD | 00h |
| **Dot_lsd7** | 08Dh | R | Dot L2-CS15 LSD | Dot L2-CS14 LSD | Dot L2-CS13 LSD | Dot L2-CS12 LSD | Dot L2-CS11 LSD | Dot L2-CS10 LSD | Dot L2-CS9 LSD | Dot L2-CS8 LSD | 00h |
| **Dot_lsd8** | 08Eh | R | Reserved | | | | | | Dot L2-CS17 LSD | Dot L2-CS16 LSD | 00h |
| **Dot_lsd9** | 08Fh | R | Dot L3-CS7 LSD | Dot L3-CS6 LSD | Dot L3-CS5 LSD | Dot L3-CS4 LSD | Dot L3-CS3 LSD | Dot L3-CS2 LSD | Dot L3-CS1 LSD | Dot L3-CS0 LSD | 00h |
| **Dot_lsd10** | 090h | R | Dot L3-CS15 LSD | Dot L3-CS14 LSD | Dot L3-CS13 LSD | Dot L3-CS12 LSD | Dot L3-CS11 LSD | Dot L3-CS10 LSD | Dot L3-CS9 LSD | Dot L3-CS8 LSD | 00h |
| **Dot_lsd11** | 091h | R | Reserved | | | | | | Dot L3-CS17 LSD | Dot L3-CS16 LSD | 00h |
| **Dot_lsd12** | 092h | R | Dot L4-CS7 LSD | Dot L4-CS6 LSD | Dot L4-CS5 LSD | Dot L4-CS4 LSD | Dot L4-CS3 LSD | Dot L4-CS2 LSD | Dot L4-CS1 LSD | Dot L4-CS0 LSD | 00h |
| **Dot_lsd13** | 093h | R | Dot L4-CS15 LSD | Dot L4-CS14 LSD | Dot L4-CS13 LSD | Dot L4-CS12 LSD | Dot L4-CS11 LSD | Dot L4-CS10 LSD | Dot L4-CS9 LSD | Dot L4-CS8 LSD | 00h |
| **Dot_lsd14** | 094h | R | Reserved | | | | | | Dot L4-CS17 LSD | Dot L4-CS16 LSD | 00h |
| **Dot_lsd15** | 095h | R | Dot L5-CS7 LSD | Dot L5-CS6 LSD | Dot L5-CS5 LSD | Dot L5-CS4 LSD | Dot L5-CS3 LSD | Dot L5-CS2 LSD | Dot L5-CS1 LSD | Dot L5-CS0 LSD | 00h |
| **Dot_lsd16** | 096h | R | Dot L5-CS15 LSD | Dot L5-CS14 LSD | Dot L5-CS13 LSD | Dot L5-CS12 LSD | Dot L5-CS11 LSD | Dot L5-CS10 LSD | Dot L5-CS9 LSD | Dot L5-CS8 LSD | 00h |
| **Dot_lsd17** | 097h | R | Reserved | | | | | | Dot L5-CS17 LSD | Dot L5-CS16 LSD | 00h |
| **Dot_lsd18** | 098h | R | Dot L6-CS7 LSD | Dot L6-CS6 LSD | Dot L6-CS5 LSD | Dot L6-CS4 LSD | Dot L6-CS3 LSD | Dot L6-CS2 LSD | Dot L6-CS1 LSD | Dot L6-CS0 LSD | 00h |
| **Dot_lsd19** | 099h | R | Dot L6-CS15 LSD | Dot L6-CS14 LSD | Dot L6-CS13 LSD | Dot L6-CS12 LSD | Dot L6-CS11 LSD | Dot L6-CS10 LSD | Dot L6-CS9 LSD | Dot L6-CS8 LSD | 00h |
| **Dot_lsd20** | 09Ah | R | Reserved | | | | | | Dot L6-CS17 LSD | Dot L6-CS16 LSD | 00h |

Copyright © 2024 Texas Instruments Incorporated

| Register Acronym | Address | Type | D7 | D6 | D5 | D4 | D3 | D2 | D1 | D0 | Default |
|---|---|---|---|---|---|---|---|---|---|---|---|
| **Dot_lsd21** | 09Bh | R | Dot L7-CS7 LSD | Dot L7-CS6 LSD | Dot L7-CS5 LSD | Dot L7-CS4 LSD | Dot L7-CS3 LSD | Dot L7-CS2 LSD | Dot L7-CS1 LSD | Dot L7-CS0 LSD | 00h |
| **Dot_lsd22** | 09Ch | R | Dot L7-CS15 LSD | Dot L7-CS14 LSD | Dot L7-CS13 LSD | Dot L7-CS12 LSD | Dot L7-CS11 LSD | Dot L7-CS10 LSD | Dot L7-CS9 LSD | Dot L7-CS8 LSD | 00h |
| **Dot_lsd23** | 09Dh | R | Reserved | | | | | | Dot L7-CS17 LSD | Dot L7-CS16 LSD | 00h |
| **LOD_clear** | 0A7h | W | Reserved | | | | LOD_Clear | | | | 00h |
| **LSD_clear** | 0A8h | W | Reserved | | | | LSD_Clear | | | | 00h |
| **Reset** | 0A9h | W | Reset | | | | | | | | 00h |
| **DC0** | 100h | R/W | LED dot current setting for Dot L0-CS0 | | | | | | | | 80h |
| **DC1** | 101h | R/W | LED dot current setting for Dot L0-CS1 | | | | | | | | 80h |
| **DC2** | 102h | R/W | LED dot current setting for Dot L0-CS2 | | | | | | | | 80h |
| **DC3** | 103h | R/W | LED dot current setting for Dot L0-CS3 | | | | | | | | 80h |
| **DC4** | 104h | R/W | LED dot current setting for Dot L0-CS4 | | | | | | | | 80h |
| **DC5** | 105h | R/W | LED dot current setting for Dot L0-CS5 | | | | | | | | 80h |
| **DC6** | 106h | R/W | LED dot current setting for Dot L0-CS6 | | | | | | | | 80h |
| **DC7** | 107h | R/W | LED dot current setting for Dot L0-CS7 | | | | | | | | 80h |
| **DC8** | 108h | R/W | LED dot current setting for Dot L0-CS8 | | | | | | | | 80h |
| **DC9** | 109h | R/W | LED dot current setting for Dot L0-CS9 | | | | | | | | 80h |
| **DC10** | 10Ah | R/W | LED dot current setting for Dot L0-CS10 | | | | | | | | 80h |
| **DC11** | 10Bh | R/W | LED dot current setting for Dot L0-CS11 | | | | | | | | 80h |
| **DC12** | 10Ch | R/W | LED dot current setting for Dot L0-CS12 | | | | | | | | 80h |
| **DC13** | 10Dh | R/W | LED dot current setting for Dot L0-CS13 | | | | | | | | 80h |
| **DC14** | 10Eh | R/W | LED dot current setting for Dot L0-CS14 | | | | | | | | 80h |
| **DC15** | 10Fh | R/W | LED dot current setting for Dot L0-CS15 | | | | | | | | 80h |
| **DC16** | 110h | R/W | LED dot current setting for Dot L0-CS16 | | | | | | | | 80h |
| **DC17** | 111h | R/W | LED dot current setting for Dot L0-CS17 | | | | | | | | 80h |
| **DC18** | 112h | R/W | LED dot current setting for Dot L1-CS0 | | | | | | | | 80h |
| **DC19** | 113h | R/W | LED dot current setting for Dot L1-CS1 | | | | | | | | 80h |
| **DC20** | 114h | R/W | LED dot current setting for Dot L1-CS2 | | | | | | | | 80h |
| **DC21** | 115h | R/W | LED dot current setting for Dot L1-CS3 | | | | | | | | 80h |
| **DC22** | 116h | R/W | LED dot current setting for Dot L1-CS4 | | | | | | | | 80h |
| **DC23** | 117h | R/W | LED dot current setting for Dot L1-CS5 | | | | | | | | 80h |
| **DC24** | 118h | R/W | LED dot current setting for Dot L1-CS6 | | | | | | | | 80h |
| **DC25** | 119h | R/W | LED dot current setting for Dot L1-CS7 | | | | | | | | 80h |
| **DC26** | 11Ah | R/W | LED dot current setting for Dot L1-CS8 | | | | | | | | 80h |
| **DC27** | 11Bh | R/W | LED dot current setting for Dot L1-CS9 | | | | | | | | 80h |
| **DC28** | 11Ch | R/W | LED dot current setting for Dot L1-CS10 | | | | | | | | 80h |
| **DC29** | 11Dh | R/W | LED dot current setting for Dot L1-CS11 | | | | | | | | 80h |
| **DC30** | 11Eh | R/W | LED dot current setting for Dot L1-CS12 | | | | | | | | 80h |
| **DC31** | 11Fh | R/W | LED dot current setting for Dot L1-CS13 | | | | | | | | 80h |
| **DC32** | 120h | R/W | LED dot current setting for Dot L1-CS14 | | | | | | | | 80h |
| **DC33** | 121h | R/W | LED dot current setting for Dot L1-CS15 | | | | | | | | 80h |
| **DC34** | 122h | R/W | LED dot current setting for Dot L1-CS16 | | | | | | | | 80h |
| **DC35** | 123h | R/W | LED dot current setting for Dot L1-CS17 | | | | | | | | 80h |


Copyright © 2024 Texas Instruments Incorporated

| Register Acronym | Address | Type | D7 | D6 | D5 | D4 | D3 | D2 | D1 | D0 | Default |
|---|---|---|---|---|---|---|---|---|---|---|---|
| **DC36** | 124h | R/W | LED dot current setting for Dot L2-CS0 | | | | | | | | 80h |
| **DC37** | 125h | R/W | LED dot current setting for Dot L2-CS1 | | | | | | | | 80h |
| **DC38** | 126h | R/W | LED dot current setting for Dot L2-CS2 | | | | | | | | 80h |
| **DC39** | 127h | R/W | LED dot current setting for Dot L2-CS3 | | | | | | | | 80h |
| **DC40** | 128h | R/W | LED dot current setting for Dot L2-CS4 | | | | | | | | 80h |
| **DC41** | 129h | R/W | LED dot current setting for Dot L2-CS5 | | | | | | | | 80h |
| **DC42** | 12Ah | R/W | LED dot current setting for Dot L2-CS6 | | | | | | | | 80h |
| **DC43** | 12Bh | R/W | LED dot current setting for Dot L2-CS7 | | | | | | | | 80h |
| **DC44** | 12Ch | R/W | LED dot current setting for Dot L2-CS8 | | | | | | | | 80h |
| **DC45** | 12Dh | R/W | LED dot current setting for Dot L2-CS9 | | | | | | | | 80h |
| **DC46** | 12Eh | R/W | LED dot current setting for Dot L2-CS10 | | | | | | | | 80h |
| **DC47** | 12Fh | R/W | LED dot current setting for Dot L2-CS11 | | | | | | | | 80h |
| **DC48** | 130h | R/W | LED dot current setting for Dot L2-CS12 | | | | | | | | 80h |
| **DC49** | 131h | R/W | LED dot current setting for Dot L2-CS13 | | | | | | | | 80h |
| **DC50** | 132h | R/W | LED dot current setting for Dot L2-CS14 | | | | | | | | 80h |
| **DC51** | 133h | R/W | LED dot current setting for Dot L2-CS15 | | | | | | | | 80h |
| **DC52** | 134h | R/W | LED dot current setting for Dot L2-CS16 | | | | | | | | 80h |
| **DC53** | 135h | R/W | LED dot current setting for Dot L2-CS17 | | | | | | | | 80h |
| **DC54** | 136h | R/W | LED dot current setting for Dot L3-CS0 | | | | | | | | 80h |
| **DC55** | 137h | R/W | LED dot current setting for Dot L3-CS1 | | | | | | | | 80h |
| **DC56** | 138h | R/W | LED dot current setting for Dot L3-CS2 | | | | | | | | 80h |
| **DC57** | 139h | R/W | LED dot current setting for Dot L3-CS3 | | | | | | | | 80h |
| **DC58** | 13Ah | R/W | LED dot current setting for Dot L3-CS4 | | | | | | | | 80h |
| **DC59** | 13Bh | R/W | LED dot current setting for Dot L3-CS5 | | | | | | | | 80h |
| **DC60** | 13Ch | R/W | LED dot current setting for Dot L3-CS6 | | | | | | | | 80h |
| **DC61** | 13Dh | R/W | LED dot current setting for Dot L3-CS7 | | | | | | | | 80h |
| **DC62** | 13Eh | R/W | LED dot current setting for Dot L3-CS8 | | | | | | | | 80h |
| **DC63** | 13Fh | R/W | LED dot current setting for Dot L3-CS9 | | | | | | | | 80h |
| **DC64** | 140h | R/W | LED dot current setting for Dot L3-CS10 | | | | | | | | 80h |
| **DC65** | 141h | R/W | LED dot current setting for Dot L3-CS11 | | | | | | | | 80h |
| **DC66** | 142h | R/W | LED dot current setting for Dot L3-CS12 | | | | | | | | 80h |
| **DC67** | 143h | R/W | LED dot current setting for Dot L3-CS13 | | | | | | | | 80h |
| **DC68** | 144h | R/W | LED dot current setting for Dot L3-CS14 | | | | | | | | 80h |
| **DC69** | 145h | R/W | LED dot current setting for Dot L3-CS15 | | | | | | | | 80h |
| **DC70** | 146h | R/W | LED dot current setting for Dot L3-CS16 | | | | | | | | 80h |
| **DC71** | 147h | R/W | LED dot current setting for Dot L3-CS17 | | | | | | | | 80h |
| **DC72** | 148h | R/W | LED dot current setting for Dot L4-CS0 | | | | | | | | 80h |
| **DC73** | 149h | R/W | LED dot current setting for Dot L4-CS1 | | | | | | | | 80h |
| **DC74** | 14Ah | R/W | LED dot current setting for Dot L4-CS2 | | | | | | | | 80h |
| **DC75** | 14Bh | R/W | LED dot current setting for Dot L4-CS3 | | | | | | | | 80h |
| **DC76** | 14Ch | R/W | LED dot current setting for Dot L4-CS4 | | | | | | | | 80h |
| **DC77** | 14Dh | R/W | LED dot current setting for Dot L4-CS5 | | | | | | | | 80h |
| **DC78** | 14Eh | R/W | LED dot current setting for Dot L4-CS6 | | | | | | | | 80h |
| **DC79** | 14Fh | R/W | LED dot current setting for Dot L4-CS7 | | | | | | | | 80h |
| **DC80** | 150h | R/W | LED dot current setting for Dot L4-CS8 | | | | | | | | 80h |

Copyright © 2024 Texas Instruments Incorporated

| Register Acronym | Address | Type | D7 | D6 | D5 | D4 | D3 | D2 | D1 | D0 | Default |
|---|---|---|---|---|---|---|---|---|---|---|---|
| **DC81** | 151h | R/W | LED dot current setting for Dot L4-CS9 | | | | | | | | 80h |
| **DC82** | 152h | R/W | LED dot current setting for Dot L4-CS10 | | | | | | | | 80h |
| **DC83** | 153h | R/W | LED dot current setting for Dot L4-CS11 | | | | | | | | 80h |
| **DC84** | 154h | R/W | LED dot current setting for Dot L4-CS12 | | | | | | | | 80h |
| **DC85** | 155h | R/W | LED dot current setting for Dot L4-CS13 | | | | | | | | 80h |
| **DC86** | 156h | R/W | LED dot current setting for Dot L4-CS14 | | | | | | | | 80h |
| **DC87** | 157h | R/W | LED dot current setting for Dot L4-CS15 | | | | | | | | 80h |
| **DC88** | 158h | R/W | LED dot current setting for Dot L4-CS16 | | | | | | | | 80h |
| **DC89** | 159h | R/W | LED dot current setting for Dot L4-CS17 | | | | | | | | 80h |
| **DC90** | 15Ah | R/W | LED dot current setting for Dot L5-CS0 | | | | | | | | 80h |
| **DC91** | 15Bh | R/W | LED dot current setting for Dot L5-CS1 | | | | | | | | 80h |
| **DC92** | 15Ch | R/W | LED dot current setting for Dot L5-CS2 | | | | | | | | 80h |
| **DC93** | 15Dh | R/W | LED dot current setting for Dot L5-CS3 | | | | | | | | 80h |
| **DC94** | 15Eh | R/W | LED dot current setting for Dot L5-CS4 | | | | | | | | 80h |
| **DC95** | 15Fh | R/W | LED dot current setting for Dot L5-CS5 | | | | | | | | 80h |
| **DC96** | 160h | R/W | LED dot current setting for Dot L5-CS6 | | | | | | | | 80h |
| **DC97** | 161h | R/W | LED dot current setting for Dot L5-CS7 | | | | | | | | 80h |
| **DC98** | 162h | R/W | LED dot current setting for Dot L5-CS8 | | | | | | | | 80h |
| **DC99** | 163h | R/W | LED dot current setting for Dot L5-CS9 | | | | | | | | 80h |
| **DC100** | 164h | R/W | LED dot current setting for Dot L5-CS10 | | | | | | | | 80h |
| **DC101** | 165h | R/W | LED dot current setting for Dot L5-CS11 | | | | | | | | 80h |
| **DC102** | 166h | R/W | LED dot current setting for Dot L5-CS12 | | | | | | | | 80h |
| **DC103** | 167h | R/W | LED dot current setting for Dot L5-CS13 | | | | | | | | 80h |
| **DC104** | 168h | R/W | LED dot current setting for Dot L5-CS14 | | | | | | | | 80h |
| **DC105** | 169h | R/W | LED dot current setting for Dot L5-CS15 | | | | | | | | 80h |
| **DC106** | 16Ah | R/W | LED dot current setting for Dot L5-CS16 | | | | | | | | 80h |
| **DC107** | 16Bh | R/W | LED dot current setting for Dot L5-CS17 | | | | | | | | 80h |
| **DC108** | 16Ch | R/W | LED dot current setting for Dot L6-CS0 | | | | | | | | 80h |
| **DC109** | 16Dh | R/W | LED dot current setting for Dot L6-CS1 | | | | | | | | 80h |
| **DC110** | 16Eh | R/W | LED dot current setting for Dot L6-CS2 | | | | | | | | 80h |
| **DC111** | 16Fh | R/W | LED dot current setting for Dot L6-CS3 | | | | | | | | 80h |
| **DC112** | 170h | R/W | LED dot current setting for Dot L6-CS4 | | | | | | | | 80h |
| **DC113** | 171h | R/W | LED dot current setting for Dot L6-CS5 | | | | | | | | 80h |
| **DC114** | 172h | R/W | LED dot current setting for Dot L6-CS6 | | | | | | | | 80h |
| **DC115** | 173h | R/W | LED dot current setting for Dot L6-CS7 | | | | | | | | 80h |
| **DC116** | 174h | R/W | LED dot current setting for Dot L6-CS8 | | | | | | | | 80h |
| **DC117** | 175h | R/W | LED dot current setting for Dot L6-CS9 | | | | | | | | 80h |
| **DC118** | 176h | R/W | LED dot current setting for Dot L6-CS10 | | | | | | | | 80h |
| **DC119** | 177h | R/W | LED dot current setting for Dot L6-CS11 | | | | | | | | 80h |
| **DC120** | 178h | R/W | LED dot current setting for Dot L6-CS12 | | | | | | | | 80h |
| **DC121** | 179h | R/W | LED dot current setting for Dot L6-CS13 | | | | | | | | 80h |
| **DC122** | 17Ah | R/W | LED dot current setting for Dot L6-CS14 | | | | | | | | 80h |
| **DC123** | 17Bh | R/W | LED dot current setting for Dot L6-CS15 | | | | | | | | 80h |
| **DC124** | 17Ch | R/W | LED dot current setting for Dot L6-CS16 | | | | | | | | 80h |
| **DC125** | 17Dh | R/W | LED dot current setting for Dot L6-CS17 | | | | | | | | 80h |


Copyright © 2024 Texas Instruments Incorporated

| Register Acronym | Address | Type | D7 | D6 | D5 | D4 | D3 | D2 | D1 | D0 | Default |
|---|---|---|---|---|---|---|---|---|---|---|---|
| **DC126** | 17Eh | R/W | LED dot current setting for Dot L7-CS0 | | | | | | | | 80h |
| **DC127** | 17Fh | R/W | LED dot current setting for Dot L7-CS1 | | | | | | | | 80h |
| **DC128** | 180h | R/W | LED dot current setting for Dot L7-CS2 | | | | | | | | 80h |
| **DC129** | 181h | R/W | LED dot current setting for Dot L7-CS3 | | | | | | | | 80h |
| **DC130** | 182h | R/W | LED dot current setting for Dot L7-CS4 | | | | | | | | 80h |
| **DC131** | 183h | R/W | LED dot current setting for Dot L7-CS5 | | | | | | | | 80h |
| **DC132** | 184h | R/W | LED dot current setting for Dot L7-CS6 | | | | | | | | 80h |
| **DC133** | 185h | R/W | LED dot current setting for Dot L7-CS7 | | | | | | | | 80h |
| **DC134** | 186h | R/W | LED dot current setting for Dot L7-CS8 | | | | | | | | 80h |
| **DC135** | 187h | R/W | LED dot current setting for Dot L7-CS9 | | | | | | | | 80h |
| **DC136** | 188h | R/W | LED dot current setting for Dot L7-CS10 | | | | | | | | 80h |
| **DC137** | 189h | R/W | LED dot current setting for Dot L7-CS11 | | | | | | | | 80h |
| **DC138** | 18Ah | R/W | LED dot current setting for Dot L7-CS12 | | | | | | | | 80h |
| **DC139** | 18Bh | R/W | LED dot current setting for Dot L7-CS13 | | | | | | | | 80h |
| **DC140** | 18Ch | R/W | LED dot current setting for Dot L7-CS14 | | | | | | | | 80h |
| **DC141** | 18Dh | R/W | LED dot current setting for Dot L7-CS15 | | | | | | | | 80h |
| **DC142** | 18Eh | R/W | LED dot current setting for Dot L7-CS16 | | | | | | | | 80h |
| **DC143** | 18Fh | R/W | LED dot current setting for Dot L7-CS17 | | | | | | | | 80h |
| **pwm_bri0** | 200h | R/W | 8-bits PWM for Dot L0-CS0 OR 16-bits PWM lower 8 bits [7:0] for Dot L0-CS0 | | | | | | | | 00h |
| **pwm_bri1** | 201h | R/W | 8-bits PWM for Dot L0-CS1 OR 16-bits PWM higher 8 bits [15:8] for Dot L0-CS0 | | | | | | | | 00h |
| **pwm_bri2** | 202h | R/W | 8-bits PWM for Dot L0-CS2 OR 16-bits PWM lower 8 bits [7:0] for Dot L0-CS1 | | | | | | | | 00h |
| **pwm_bri3** | 203h | R/W | 8-bits PWM for Dot L0-CS3 OR 16-bits PWM higher 8 bits [15:8] for Dot L0-CS1 | | | | | | | | 00h |
| **pwm_bri4** | 204h | R/W | 8-bits PWM for Dot L0-CS4 OR 16-bits PWM lower 8 bits [7:0] for Dot L0-CS2 | | | | | | | | 00h |
| **pwm_bri5** | 205h | R/W | 8-bits PWM for Dot L0-CS5 OR 16-bits PWM higher 8 bits [15:8] for Dot L0-CS2 | | | | | | | | 00h |
| **pwm_bri6** | 206h | R/W | 8-bits PWM for Dot L0-CS6 OR 16-bits PWM lower 8 bits [7:0] for Dot L0-CS3 | | | | | | | | 00h |
| **pwm_bri7** | 207h | R/W | 8-bits PWM for Dot L0-CS7 OR 16-bits PWM higher 8 bits [15:8] for Dot L0-CS3 | | | | | | | | 00h |
| **pwm_bri8** | 208h | R/W | 8-bits PWM for Dot L0-CS8 OR 16-bits PWM lower 8 bits [7:0] for Dot L0-CS4 | | | | | | | | 00h |
| **pwm_bri9** | 209h | R/W | 8-bits PWM for Dot L0-CS9 OR 16-bits PWM higher 8 bits [15:8] for Dot L0-CS4 | | | | | | | | 00h |
| **pwm_bri10** | 20Ah | R/W | 8-bits PWM for Dot L0-CS10 OR 16-bits PWM lower 8 bits [7:0] for Dot L0-CS5 | | | | | | | | 00h |
| **pwm_bri11** | 20Bh | R/W | 8-bits PWM for Dot L0-CS11 OR 16-bits PWM higher 8 bits [15:8] for Dot L0-CS5 | | | | | | | | 00h |
| **pwm_bri12** | 20Ch | R/W | 8-bits PWM for Dot L0-CS12 OR 16-bits PWM lower 8 bits [7:0] for Dot L0-CS6 | | | | | | | | 00h |
| **pwm_bri13** | 20Dh | R/W | 8-bits PWM for Dot L0-CS13 OR 16-bits PWM higher 8 bits [15:8] for Dot L0-CS6 | | | | | | | | 00h |
| **pwm_bri14** | 20Eh | R/W | 8-bits PWM for Dot L0-CS14 OR 16-bits PWM lower 8 bits [7:0] for Dot L0-CS7 | | | | | | | | 00h |
| **pwm_bri15** | 20Fh | R/W | 8-bits PWM for Dot L0-CS15 OR 16-bits PWM higher 8 bits [15:8] for Dot L0-CS7 | | | | | | | | 00h |
| **pwm_bri16** | 210h | R/W | 8-bits PWM for Dot L0-CS16 OR 16-bits PWM lower 8 bits [7:0] for Dot L0-CS8 | | | | | | | | 00h |
| **pwm_bri17** | 211h | R/W | 8-bits PWM for Dot L0-CS17 OR 16-bits PWM higher 8 bits [15:8] for Dot L0-CS8 | | | | | | | | 00h |
| **pwm_bri18** | 212h | R/W | 8-bits PWM for Dot L1-CS0 OR 16-bits PWM lower 8 bits [7:0] for Dot L0-CS9 | | | | | | | | 00h |
| **pwm_bri19** | 213h | R/W | 8-bits PWM for Dot L1-CS1 OR 16-bits PWM higher 8 bits [15:8] for Dot L0-CS9 | | | | | | | | 00h |
| **pwm_bri20** | 214h | R/W | 8-bits PWM for Dot L1-CS2 OR 16-bits PWM lower 8 bits [7:0] for Dot L0-CS10 | | | | | | | | 00h |
| **pwm_bri21** | 215h | R/W | 8-bits PWM for Dot L1-CS3 OR 16-bits PWM higher 8 bits [15:8] for Dot L0-CS10 | | | | | | | | 00h |
| **pwm_bri22** | 216h | R/W | 8-bits PWM for Dot L1-CS4 OR 16-bits PWM lower 8 bits [7:0] for Dot L0-CS11 | | | | | | | | 00h |
| **pwm_bri23** | 217h | R/W | 8-bits PWM for Dot L1-CS5 OR 16-bits PWM higher 8 bits [15:8] for Dot L0-CS11 | | | | | | | | 00h |
| **pwm_bri24** | 218h | R/W | 8-bits PWM for Dot L1-CS6 OR 16-bits PWM lower 8 bits [7:0] for Dot L0-CS12 | | | | | | | | 00h |
| **pwm_bri25** | 219h | R/W | 8-bits PWM for Dot L1-CS7 OR 16-bits PWM higher 8 bits [15:8] for Dot L0-CS12 | | | | | | | | 00h |
| **pwm_bri26** | 21Ah | R/W | 8-bits PWM for Dot L1-CS8 OR 16-bits PWM lower 8 bits [7:0] for Dot L0-CS13 | | | | | | | | 00h |

Copyright © 2024 Texas Instruments Incorporated

| Register Acronym | Address | Type | D7 | D6 | D5 | D4 | D3 | D2 | D1 | D0 | Default |
|---|---|---|---|---|---|---|---|---|---|---|---|
| **pwm_bri27** | 21Bh | R/W | 8-bits PWM for Dot L1-CS9 OR 16-bits PWM higher 8 bits [15:8] for Dot L0-CS13 | | | | | | | | 00h |
| **pwm_bri28** | 21Ch | R/W | 8-bits PWM for Dot L1-CS10 OR 16-bits PWM lower 8 bits [7:0] for Dot L0-CS14 | | | | | | | | 00h |
| **pwm_bri29** | 21Dh | R/W | 8-bits PWM for Dot L1-CS11 OR 16-bits PWM higher 8 bits [15:8] for Dot L0-CS14 | | | | | | | | 00h |
| **pwm_bri30** | 21Eh | R/W | 8-bits PWM for Dot L1-CS12 OR 16-bits PWM lower 8 bits [7:0] for Dot L0-CS15 | | | | | | | | 00h |
| **pwm_bri31** | 21Fh | R/W | 8-bits PWM for Dot L1-CS13 OR 16-bits PWM higher 8 bits [15:8] for Dot L0-CS15 | | | | | | | | 00h |
| **pwm_bri32** | 220h | R/W | 8-bits PWM for Dot L1-CS14 OR 16-bits PWM lower 8 bits [7:0] for Dot L0-CS16 | | | | | | | | 00h |
| **pwm_bri33** | 221h | R/W | 8-bits PWM for Dot L1-CS15 OR 16-bits PWM higher 8 bits [15:8] for Dot L0-CS16 | | | | | | | | 00h |
| **pwm_bri34** | 222h | R/W | 8-bits PWM for Dot L1-CS16 OR 16-bits PWM lower 8 bits [7:0] for Dot L0-CS17 | | | | | | | | 00h |
| **pwm_bri35** | 223h | R/W | 8-bits PWM for Dot L1-CS17 OR 16-bits PWM higher 8 bits [15:8] for Dot L0-CS17 | | | | | | | | 00h |
| **pwm_bri36** | 224h | R/W | 8-bits PWM for Dot L2-CS0 OR 16-bits PWM lower 8 bits [7:0] for Dot L1-CS0 | | | | | | | | 00h |
| **pwm_bri37** | 225h | R/W | 8-bits PWM for Dot L2-CS1 OR 16-bits PWM higher 8 bits [15:8] for Dot L1-CS0 | | | | | | | | 00h |
| **pwm_bri38** | 226h | R/W | 8-bits PWM for Dot L2-CS2 OR 16-bits PWM lower 8 bits [7:0] for Dot L1-CS1 | | | | | | | | 00h |
| **pwm_bri39** | 227h | R/W | 8-bits PWM for Dot L2-CS3 OR 16-bits PWM higher 8 bits [15:8] for Dot L1-CS1 | | | | | | | | 00h |
| **pwm_bri40** | 228h | R/W | 8-bits PWM for Dot L2-CS4 OR 16-bits PWM lower 8 bits [7:0] for Dot L1-CS2 | | | | | | | | 00h |
| **pwm_bri41** | 229h | R/W | 8-bits PWM for Dot L2-CS5 OR 16-bits PWM higher 8 bits [15:8] for Dot L1-CS2 | | | | | | | | 00h |
| **pwm_bri42** | 22Ah | R/W | 8-bits PWM for Dot L2-CS6 OR 16-bits PWM lower 8 bits [7:0] for Dot L1-CS3 | | | | | | | | 00h |
| **pwm_bri43** | 22Bh | R/W | 8-bits PWM for Dot L2-CS7 OR 16-bits PWM higher 8 bits [15:8] for Dot L1-CS3 | | | | | | | | 00h |
| **pwm_bri44** | 22Ch | R/W | 8-bits PWM for Dot L2-CS8 OR 16-bits PWM lower 8 bits [7:0] for Dot L1-CS4 | | | | | | | | 00h |
| **pwm_bri45** | 22Dh | R/W | 8-bits PWM for Dot L2-CS9 OR 16-bits PWM higher 8 bits [15:8] for Dot L1-CS4 | | | | | | | | 00h |
| **pwm_bri46** | 22Eh | R/W | 8-bits PWM for Dot L2-CS10 OR 16-bits PWM lower 8 bits [7:0] for Dot L1-CS5 | | | | | | | | 00h |
| **pwm_bri47** | 22Fh | R/W | 8-bits PWM for Dot L2-CS11 OR 16-bits PWM higher 8 bits [15:8] for Dot L1-CS5 | | | | | | | | 00h |
| **pwm_bri48** | 230h | R/W | 8-bits PWM for Dot L2-CS12 OR 16-bits PWM lower 8 bits [7:0] for Dot L1-CS6 | | | | | | | | 00h |
| **pwm_bri49** | 231h | R/W | 8-bits PWM for Dot L2-CS13 OR 16-bits PWM higher 8 bits [15:8] for Dot L1-CS6 | | | | | | | | 00h |
| **pwm_bri50** | 232h | R/W | 8-bits PWM for Dot L2-CS14 OR 16-bits PWM lower 8 bits [7:0] for Dot L1-CS7 | | | | | | | | 00h |
| **pwm_bri51** | 233h | R/W | 8-bits PWM for Dot L2-CS15 OR 16-bits PWM higher 8 bits [15:8] for Dot L1-CS7 | | | | | | | | 00h |
| **pwm_bri52** | 234h | R/W | 8-bits PWM for Dot L2-CS16 OR 16-bits PWM lower 8 bits [7:0] for Dot L1-CS8 | | | | | | | | 00h |
| **pwm_bri53** | 235h | R/W | 8-bits PWM for Dot L2-CS17 OR 16-bits PWM higher 8 bits [15:8] for Dot L1-CS8 | | | | | | | | 00h |
| **pwm_bri54** | 236h | R/W | 8-bits PWM for Dot L3-CS0 OR 16-bits PWM lower 8 bits [7:0] for Dot L1-CS9 | | | | | | | | 00h |
| **pwm_bri55** | 237h | R/W | 8-bits PWM for Dot L3-CS1 OR 16-bits PWM higher 8 bits [15:8] for Dot L1-CS9 | | | | | | | | 00h |
| **pwm_bri56** | 238h | R/W | 8-bits PWM for Dot L3-CS2 OR 16-bits PWM lower 8 bits [7:0] for Dot L1-CS10 | | | | | | | | 00h |
| **pwm_bri57** | 239h | R/W | 8-bits PWM for Dot L3-CS3 OR 16-bits PWM higher 8 bits [15:8] for Dot L1-CS10 | | | | | | | | 00h |
| **pwm_bri58** | 23Ah | R/W | 8-bits PWM for Dot L3-CS4 OR 16-bits PWM lower 8 bits [7:0] for Dot L1-CS11 | | | | | | | | 00h |
| **pwm_bri59** | 23Bh | R/W | 8-bits PWM for Dot L3-CS5 OR 16-bits PWM higher 8 bits [15:8] for Dot L1-CS11 | | | | | | | | 00h |
| **pwm_bri60** | 23Ch | R/W | 8-bits PWM for Dot L3-CS6 OR 16-bits PWM lower 8 bits [7:0] for Dot L1-CS12 | | | | | | | | 00h |
| **pwm_bri61** | 23Dh | R/W | 8-bits PWM for Dot L3-CS7 OR 16-bits PWM higher 8 bits [15:8] for Dot L1-CS12 | | | | | | | | 00h |
| **pwm_bri62** | 23Eh | R/W | 8-bits PWM for Dot L3-CS8 OR 16-bits PWM lower 8 bits [7:0] for Dot L1-CS13 | | | | | | | | 00h |
| **pwm_bri63** | 23Fh | R/W | 8-bits PWM for Dot L3-CS9 OR 16-bits PWM higher 8 bits [15:8] for Dot L1-CS13 | | | | | | | | 00h |
| **pwm_bri64** | 240h | R/W | 8-bits PWM for Dot L3-CS10 OR 16-bits PWM lower 8 bits [7:0] for Dot L1-CS14 | | | | | | | | 00h |
| **pwm_bri65** | 241h | R/W | 8-bits PWM for Dot L3-CS11 OR 16-bits PWM higher 8 bits [15:8] for Dot L1-CS14 | | | | | | | | 00h |
| **pwm_bri66** | 242h | R/W | 8-bits PWM for Dot L3-CS12 OR 16-bits PWM lower 8 bits [7:0] for Dot L1-CS15 | | | | | | | | 00h |
| **pwm_bri67** | 243h | R/W | 8-bits PWM for Dot L3-CS13 OR 16-bits PWM higher 8 bits [15:8] for Dot L1-CS15 | | | | | | | | 00h |
| **pwm_bri68** | 244h | R/W | 8-bits PWM for Dot L3-CS14 OR 16-bits PWM lower 8 bits [7:0] for Dot L1-CS16 | | | | | | | | 00h |
| **pwm_bri69** | 245h | R/W | 8-bits PWM for Dot L3-CS15 OR 16-bits PWM higher 8 bits [15:8] for Dot L1-CS16 | | | | | | | | 00h |
| **pwm_bri70** | 246h | R/W | 8-bits PWM for Dot L3-CS16 OR 16-bits PWM lower 8 bits [7:0] for Dot L1-CS17 | | | | | | | | 00h |
| **pwm_bri71** | 247h | R/W | 8-bits PWM for Dot L3-CS17 OR 16-bits PWM higher 8 bits [15:8] for Dot L1-CS17 | | | | | | | | 00h |


Copyright © 2024 Texas Instruments Incorporated

| Register Acronym | Address | Type | D7 | D6 | D5 | D4 | D3 | D2 | D1 | D0 | Default |
|---|---|---|---|---|---|---|---|---|---|---|---|
| **pwm_bri72** | 248h | R/W | 8-bits PWM for Dot L4-CS0 OR 16-bits PWM lower 8 bits [7:0] for Dot L2-CS0 | | | | | | | | 00h |
| **pwm_bri73** | 249h | R/W | 8-bits PWM for Dot L4-CS1 OR 16-bits PWM higher 8 bits [15:8] for Dot L2-CS0 | | | | | | | | 00h |
| **pwm_bri74** | 24Ah | R/W | 8-bits PWM for Dot L4-CS2 OR 16-bits PWM lower 8 bits [7:0] for Dot L2-CS1 | | | | | | | | 00h |
| **pwm_bri75** | 24Bh | R/W | 8-bits PWM for Dot L4-CS3 OR 16-bits PWM higher 8 bits [15:8] for Dot L2-CS1 | | | | | | | | 00h |
| **pwm_bri76** | 24Ch | R/W | 8-bits PWM for Dot L4-CS4 OR 16-bits PWM lower 8 bits [7:0] for Dot L2-CS2 | | | | | | | | 00h |
| **pwm_bri77** | 24Dh | R/W | 8-bits PWM for Dot L4-CS5 OR 16-bits PWM higher 8 bits [15:8] for Dot L2-CS2 | | | | | | | | 00h |
| **pwm_bri78** | 24Eh | R/W | 8-bits PWM for Dot L4-CS6 OR 16-bits PWM lower 8 bits [7:0] for Dot L2-CS3 | | | | | | | | 00h |
| **pwm_bri79** | 24Fh | R/W | 8-bits PWM for Dot L4-CS7 OR 16-bits PWM higher 8 bits [15:8] for Dot L2-CS3 | | | | | | | | 00h |
| **pwm_bri80** | 250h | R/W | 8-bits PWM for Dot L4-CS8 OR 16-bits PWM lower 8 bits [7:0] for Dot L2-CS4 | | | | | | | | 00h |
| **pwm_bri81** | 251h | R/W | 8-bits PWM for Dot L4-CS9 OR 16-bits PWM higher 8 bits [15:8] for Dot L2-CS4 | | | | | | | | 00h |
| **pwm_bri82** | 252h | R/W | 8-bits PWM for Dot L4-CS10 OR 16-bits PWM lower 8 bits [7:0] for Dot L2-CS5 | | | | | | | | 00h |
| **pwm_bri83** | 253h | R/W | 8-bits PWM for Dot L4-CS11 OR 16-bits PWM higher 8 bits [15:8] for Dot L2-CS5 | | | | | | | | 00h |
| **pwm_bri84** | 254h | R/W | 8-bits PWM for Dot L4-CS12 OR 16-bits PWM lower 8 bits [7:0] for Dot L2-CS6 | | | | | | | | 00h |
| **pwm_bri85** | 255h | R/W | 8-bits PWM for Dot L4-CS13 OR 16-bits PWM higher 8 bits [15:8] for Dot L2-CS6 | | | | | | | | 00h |
| **pwm_bri86** | 256h | R/W | 8-bits PWM for Dot L4-CS14 OR 16-bits PWM lower 8 bits [7:0] for Dot L2-CS7 | | | | | | | | 00h |
| **pwm_bri87** | 257h | R/W | 8-bits PWM for Dot L4-CS15 OR 16-bits PWM higher 8 bits [15:8] for Dot L2-CS7 | | | | | | | | 00h |
| **pwm_bri88** | 258h | R/W | 8-bits PWM for Dot L4-CS16 OR 16-bits PWM lower 8 bits [7:0] for Dot L2-CS8 | | | | | | | | 00h |
| **pwm_bri89** | 259h | R/W | 8-bits PWM for Dot L4-CS17 OR 16-bits PWM higher 8 bits [15:8] for Dot L2-CS8 | | | | | | | | 00h |
| **pwm_bri90** | 25Ah | R/W | 8-bits PWM for Dot L5-CS0 OR 16-bits PWM lower 8 bits [7:0] for Dot L2-CS9 | | | | | | | | 00h |
| **pwm_bri91** | 25Bh | R/W | 8-bits PWM for Dot L5-CS1 OR 16-bits PWM higher 8 bits [15:8] for Dot L2-CS9 | | | | | | | | 00h |
| **pwm_bri92** | 25Ch | R/W | 8-bits PWM for Dot L5-CS2 OR 16-bits PWM lower 8 bits [7:0] for Dot L2-CS10 | | | | | | | | 00h |
| **pwm_bri93** | 25Dh | R/W | 8-bits PWM for Dot L5-CS3 OR 16-bits PWM higher 8 bits [15:8] for Dot L2-CS10 | | | | | | | | 00h |
| **pwm_bri94** | 25Eh | R/W | 8-bits PWM for Dot L5-CS4 OR 16-bits PWM lower 8 bits [7:0] for Dot L2-CS11 | | | | | | | | 00h |
| **pwm_bri95** | 25Fh | R/W | 8-bits PWM for Dot L5-CS5 OR 16-bits PWM higher 8 bits [15:8] for Dot L2-CS11 | | | | | | | | 00h |
| **pwm_bri96** | 260h | R/W | 8-bits PWM for Dot L5-CS6 OR 16-bits PWM lower 8 bits [7:0] for Dot L2-CS12 | | | | | | | | 00h |
| **pwm_bri97** | 261h | R/W | 8-bits PWM for Dot L5-CS7 OR 16-bits PWM higher 8 bits [15:8] for Dot L2-CS12 | | | | | | | | 00h |
| **pwm_bri98** | 262h | R/W | 8-bits PWM for Dot L5-CS8 OR 16-bits PWM lower 8 bits [7:0] for Dot L2-CS13 | | | | | | | | 00h |
| **pwm_bri99** | 263h | R/W | 8-bits PWM for Dot L5-CS9 OR 16-bits PWM higher 8 bits [15:8] for Dot L2-CS13 | | | | | | | | 00h |
| **pwm_bri100** | 264h | R/W | 8-bits PWM for Dot L5-CS10 OR 16-bits PWM lower 8 bits [7:0] for Dot L2-CS14 | | | | | | | | 00h |
| **pwm_bri101** | 265h | R/W | 8-bits PWM for Dot L5-CS11 OR 16-bits PWM higher 8 bits [15:8] for Dot L2-CS14 | | | | | | | | 00h |
| **pwm_bri102** | 266h | R/W | 8-bits PWM for Dot L5-CS12 OR 16-bits PWM lower 8 bits [7:0] for Dot L2-CS15 | | | | | | | | 00h |
| **pwm_bri103** | 267h | R/W | 8-bits PWM for Dot L5-CS13 OR 16-bits PWM higher 8 bits [15:8] for Dot L2-CS15 | | | | | | | | 00h |
| **pwm_bri104** | 268h | R/W | 8-bits PWM for Dot L5-CS14 OR 16-bits PWM lower 8 bits [7:0] for Dot L2-CS16 | | | | | | | | 00h |
| **pwm_bri105** | 269h | R/W | 8-bits PWM for Dot L5-CS15 OR 16-bits PWM higher 8 bits [15:8] for Dot L2-CS16 | | | | | | | | 00h |
| **pwm_bri106** | 26Ah | R/W | 8-bits PWM for Dot L5-CS16 OR 16-bits PWM lower 8 bits [7:0] for Dot L2-CS17 | | | | | | | | 00h |
| **pwm_bri107** | 26Bh | R/W | 8-bits PWM for Dot L5-CS17 OR 16-bits PWM higher 8 bits [15:8] for Dot L2-CS17 | | | | | | | | 00h |
| **pwm_bri108** | 26Ch | R/W | 8-bits PWM for Dot L6-CS0 OR 16-bits PWM lower 8 bits [7:0] for Dot L3-CS0 | | | | | | | | 00h |
| **pwm_bri109** | 26Dh | R/W | 8-bits PWM for Dot L6-CS1 OR 16-bits PWM higher 8 bits [15:8] for Dot L3-CS0 | | | | | | | | 00h |
| **pwm_bri110** | 26Eh | R/W | 8-bits PWM for Dot L6-CS2 OR 16-bits PWM lower 8 bits [7:0] for Dot L3-CS1 | | | | | | | | 00h |
| **pwm_bri111** | 26Fh | R/W | 8-bits PWM for Dot L6-CS3 OR 16-bits PWM higher 8 bits [15:8] for Dot L3-CS1 | | | | | | | | 00h |
| **pwm_bri112** | 270h | R/W | 8-bits PWM for Dot L6-CS4 OR 16-bits PWM lower 8 bits [7:0] for Dot L3-CS2 | | | | | | | | 00h |
| **pwm_bri113** | 271h | R/W | 8-bits PWM for Dot L6-CS5 OR 16-bits PWM higher 8 bits [15:8] for Dot L3-CS2 | | | | | | | | 00h |
| **pwm_bri114** | 272h | R/W | 8-bits PWM for Dot L6-CS6 OR 16-bits PWM lower 8 bits [7:0] for Dot L3-CS3 | | | | | | | | 00h |
| **pwm_bri115** | 273h | R/W | 8-bits PWM for Dot L6-CS7 OR 16-bits PWM higher 8 bits [15:8] for Dot L3-CS3 | | | | | | | | 00h |
| **pwm_bri116** | 274h | R/W | 8-bits PWM for Dot L6-CS8 OR 16-bits PWM lower 8 bits [7:0] for Dot L3-CS4 | | | | | | | | 00h |

Copyright © 2024 Texas Instruments Incorporated

| Register Acronym | Address | Type | D7 | D6 | D5 | D4 | D3 | D2 | D1 | D0 | Default |
|---|---|---|---|---|---|---|---|---|---|---|---|
| **pwm_bri117** | 275h | R/W | 8-bits PWM for Dot L6-CS9 OR 16-bits PWM higher 8 bits [15:8] for Dot L3-CS4 | | | | | | | | 00h |
| **pwm_bri118** | 276h | R/W | 8-bits PWM for Dot L6-CS10 OR 16-bits PWM lower 8 bits [7:0] for Dot L3-CS5 | | | | | | | | 00h |
| **pwm_bri119** | 277h | R/W | 8-bits PWM for Dot L6-CS11 OR 16-bits PWM higher 8 bits [15:8] for Dot L3-CS5 | | | | | | | | 00h |
| **pwm_bri120** | 278h | R/W | 8-bits PWM for Dot L6-CS12 OR 16-bits PWM lower 8 bits [7:0] for Dot L3-CS6 | | | | | | | | 00h |
| **pwm_bri121** | 279h | R/W | 8-bits PWM for Dot L6-CS13 OR 16-bits PWM higher 8 bits [15:8] for Dot L3-CS6 | | | | | | | | 00h |
| **pwm_bri122** | 27Ah | R/W | 8-bits PWM for Dot L6-CS14 OR 16-bits PWM lower 8 bits [7:0] for Dot L3-CS7 | | | | | | | | 00h |
| **pwm_bri123** | 27Bh | R/W | 8-bits PWM for Dot L6-CS15 OR 16-bits PWM higher 8 bits [15:8] for Dot L3-CS7 | | | | | | | | 00h |
| **pwm_bri124** | 27Ch | R/W | 8-bits PWM for Dot L6-CS16 OR 16-bits PWM lower 8 bits [7:0] for Dot L3-CS8 | | | | | | | | 00h |
| **pwm_bri125** | 27Dh | R/W | 8-bits PWM for Dot L6-CS17 OR 16-bits PWM higher 8 bits [15:8] for Dot L3-CS8 | | | | | | | | 00h |
| **pwm_bri126** | 27Eh | R/W | 8-bits PWM for Dot L7-CS0 OR 16-bits PWM lower 8 bits [7:0] for Dot L3-CS9 | | | | | | | | 00h |
| **pwm_bri127** | 27Fh | R/W | 8-bits PWM for Dot L7-CS1 OR 16-bits PWM higher 8 bits [15:8] for Dot L3-CS9 | | | | | | | | 00h |
| **pwm_bri128** | 280h | R/W | 8-bits PWM for Dot L7-CS2 OR 16-bits PWM lower 8 bits [7:0] for Dot L3-CS10 | | | | | | | | 00h |
| **pwm_bri129** | 281h | R/W | 8-bits PWM for Dot L7-CS3 OR 16-bits PWM higher 8 bits [15:8] for Dot L3-CS10 | | | | | | | | 00h |
| **pwm_bri130** | 282h | R/W | 8-bits PWM for Dot L7-CS4 OR 16-bits PWM lower 8 bits [7:0] for Dot L3-CS11 | | | | | | | | 00h |
| **pwm_bri131** | 283h | R/W | 8-bits PWM for Dot L7-CS5 OR 16-bits PWM higher 8 bits [15:8] for Dot L3-CS11 | | | | | | | | 00h |
| **pwm_bri132** | 284h | R/W | 8-bits PWM for Dot L7-CS6 OR 16-bits PWM lower 8 bits [7:0] for Dot L3-CS12 | | | | | | | | 00h |
| **pwm_bri133** | 285h | R/W | 8-bits PWM for Dot L7-CS7 OR 16-bits PWM higher 8 bits [15:8] for Dot L3-CS12 | | | | | | | | 00h |
| **pwm_bri134** | 286h | R/W | 8-bits PWM for Dot L7-CS8 OR 16-bits PWM lower 8 bits [7:0] for Dot L3-CS13 | | | | | | | | 00h |
| **pwm_bri135** | 287h | R/W | 8-bits PWM for Dot L7-CS9 OR 16-bits PWM higher 8 bits [15:8] for Dot L3-CS13 | | | | | | | | 00h |
| **pwm_bri136** | 288h | R/W | 8-bits PWM for Dot L7-CS10 OR 16-bits PWM lower 8 bits [7:0] for Dot L3-CS14 | | | | | | | | 00h |
| **pwm_bri137** | 289h | R/W | 8-bits PWM for Dot L7-CS11 OR 16-bits PWM higher 8 bits [15:8] for Dot L3-CS14 | | | | | | | | 00h |
| **pwm_bri138** | 28Ah | R/W | 8-bits PWM for Dot L7-CS12 OR 16-bits PWM lower 8 bits [7:0] for Dot L3-CS15 | | | | | | | | 00h |
| **pwm_bri139** | 28Bh | R/W | 8-bits PWM for Dot L7-CS13 OR 16-bits PWM higher 8 bits [15:8] for Dot L3-CS15 | | | | | | | | 00h |
| **pwm_bri140** | 28Ch | R/W | 8-bits PWM for Dot L7-CS14 OR 16-bits PWM lower 8 bits [7:0] for Dot L3-CS16 | | | | | | | | 00h |
| **pwm_bri141** | 28Dh | R/W | 8-bits PWM for Dot L7-CS15 OR 16-bits PWM higher 8 bits [15:8] for Dot L3-CS16 | | | | | | | | 00h |
| **pwm_bri142** | 28Eh | R/W | 8-bits PWM for Dot L7-CS16 OR 16-bits PWM lower 8 bits [7:0] for Dot L3-CS17 | | | | | | | | 00h |
| **pwm_bri143** | 28Fh | R/W | 8-bits PWM for Dot L7-CS17 OR 16-bits PWM higher 8 bits [15:8] for Dot L3-CS17 | | | | | | | | 00h |
| **pwm_bri144** | 290h | R/W | 16-bits PWM lower 8 bits [7:0] for Dot L4-CS0 | | | | | | | | 00h |
| **pwm_bri145** | 291h | R/W | 16-bits PWM higher 8 bits [15:8] for Dot L4-CS0 | | | | | | | | 00h |
| **pwm_bri146** | 292h | R/W | 16-bits PWM lower 8 bits [7:0] for Dot L4-CS1 | | | | | | | | 00h |
| **pwm_bri147** | 293h | R/W | 16-bits PWM higher 8 bits [15:8] for Dot L4-CS1 | | | | | | | | 00h |
| **pwm_bri148** | 294h | R/W | 16-bits PWM lower 8 bits [7:0] for Dot L4-CS2 | | | | | | | | 00h |
| **pwm_bri149** | 295h | R/W | 16-bits PWM higher 8 bits [15:8] for Dot L4-CS2 | | | | | | | | 00h |
| **pwm_bri150** | 296h | R/W | 16-bits PWM lower 8 bits [7:0] for Dot L4-CS3 | | | | | | | | 00h |
| **pwm_bri151** | 297h | R/W | 16-bits PWM higher 8 bits [15:8] for Dot L4-CS3 | | | | | | | | 00h |
| **pwm_bri152** | 298h | R/W | 16-bits PWM lower 8 bits [7:0] for Dot L4-CS4 | | | | | | | | 00h |
| **pwm_bri153** | 299h | R/W | 16-bits PWM higher 8 bits [15:8] for Dot L4-CS4 | | | | | | | | 00h |
| **pwm_bri154** | 29Ah | R/W | 16-bits PWM lower 8 bits [7:0] for Dot L4-CS5 | | | | | | | | 00h |
| **pwm_bri155** | 29Bh | R/W | 16-bits PWM higher 8 bits [15:8] for Dot L4-CS5 | | | | | | | | 00h |
| **pwm_bri156** | 29Ch | R/W | 16-bits PWM lower 8 bits [7:0] for Dot L4-CS6 | | | | | | | | 00h |
| **pwm_bri157** | 29Dh | R/W | 16-bits PWM higher 8 bits [15:8] for Dot L4-CS6 | | | | | | | | 00h |
| **pwm_bri158** | 29Eh | R/W | 16-bits PWM lower 8 bits [7:0] for Dot L4-CS7 | | | | | | | | 00h |
| **pwm_bri159** | 29Fh | R/W | 16-bits PWM higher 8 bits [15:8] for Dot L4-CS7 | | | | | | | | 00h |
| **pwm_bri160** | 2A0h | R/W | 16-bits PWM lower 8 bits [7:0] for Dot L4-CS8 | | | | | | | | 00h |
| **pwm_bri161** | 2A1h | R/W | 16-bits PWM higher 8 bits [15:8] for Dot L4-CS8 | | | | | | | | 00h |


Copyright © 2024 Texas Instruments Incorporated

| Register Acronym | Address | Type | D7 | D6 | D5 | D4 | D3 | D2 | D1 | D0 | Default |
|---|---|---|---|---|---|---|---|---|---|---|---|
| **pwm_bri162** | 2A2h | R/W | 16-bits PWM lower 8 bits [7:0] for Dot L4-CS9 | | | | | | | | 00h |
| **pwm_bri163** | 2A3h | R/W | 16-bits PWM higher 8 bits [15:8] for Dot L4-CS9 | | | | | | | | 00h |
| **pwm_bri164** | 2A4h | R/W | 16-bits PWM lower 8 bits [7:0] for Dot L4-CS10 | | | | | | | | 00h |
| **pwm_bri165** | 2A5h | R/W | 16-bits PWM higher 8 bits [15:8] for Dot L4-CS10 | | | | | | | | 00h |
| **pwm_bri166** | 2A6h | R/W | 16-bits PWM lower 8 bits [7:0] for Dot L4-CS11 | | | | | | | | 00h |
| **pwm_bri167** | 2A7h | R/W | 16-bits PWM higher 8 bits [15:8] for Dot L4-CS11 | | | | | | | | 00h |
| **pwm_bri168** | 2A8h | R/W | 16-bits PWM lower 8 bits [7:0] for Dot L4-CS12 | | | | | | | | 00h |
| **pwm_bri169** | 2A9h | R/W | 16-bits PWM higher 8 bits [15:8] for Dot L4-CS12 | | | | | | | | 00h |
| **pwm_bri170** | 2AAh | R/W | 16-bits PWM lower 8 bits [7:0] for Dot L4-CS13 | | | | | | | | 00h |
| **pwm_bri171** | 2ABh | R/W | 16-bits PWM higher 8 bits [15:8] for Dot L4-CS13 | | | | | | | | 00h |
| **pwm_bri172** | 2ACh | R/W | 16-bits PWM lower 8 bits [7:0] for Dot L4-CS14 | | | | | | | | 00h |
| **pwm_bri173** | 2ADh | R/W | 16-bits PWM higher 8 bits [15:8] for Dot L4-CS14 | | | | | | | | 00h |
| **pwm_bri174** | 2AEh | R/W | 16-bits PWM lower 8 bits [7:0] for Dot L4-CS15 | | | | | | | | 00h |
| **pwm_bri175** | 2AFh | R/W | 16-bits PWM higher 8 bits [15:8] for Dot L4-CS15 | | | | | | | | 00h |
| **pwm_bri176** | 2B0h | R/W | 16-bits PWM lower 8 bits [7:0] for Dot L4-CS16 | | | | | | | | 00h |
| **pwm_bri177** | 2B1h | R/W | 16-bits PWM higher 8 bits [15:8] for Dot L4-CS16 | | | | | | | | 00h |
| **pwm_bri178** | 2B2h | R/W | 16-bits PWM lower 8 bits [7:0] for Dot L4-CS17 | | | | | | | | 00h |
| **pwm_bri179** | 2B3h | R/W | 16-bits PWM higher 8 bits [15:8] for Dot L4-CS17 | | | | | | | | 00h |
| **pwm_bri180** | 2B4h | R/W | 16-bits PWM lower 8 bits [7:0] for Dot L5-CS0 | | | | | | | | 00h |
| **pwm_bri181** | 2B5h | R/W | 16-bits PWM higher 8 bits [15:8] for Dot L5-CS0 | | | | | | | | 00h |
| **pwm_bri182** | 2B6h | R/W | 16-bits PWM lower 8 bits [7:0] for Dot L5-CS1 | | | | | | | | 00h |
| **pwm_bri183** | 2B7h | R/W | 16-bits PWM higher 8 bits [15:8] for Dot L5-CS1 | | | | | | | | 00h |
| **pwm_bri184** | 2B8h | R/W | 16-bits PWM lower 8 bits [7:0] for Dot L5-CS2 | | | | | | | | 00h |
| **pwm_bri185** | 2B9h | R/W | 16-bits PWM higher 8 bits [15:8] for Dot L5-CS2 | | | | | | | | 00h |
| **pwm_bri186** | 2BAh | R/W | 16-bits PWM lower 8 bits [7:0] for Dot L5-CS3 | | | | | | | | 00h |
| **pwm_bri187** | 2BBh | R/W | 16-bits PWM higher 8 bits [15:8] for Dot L5-CS3 | | | | | | | | 00h |
| **pwm_bri188** | 2BCh | R/W | 16-bits PWM lower 8 bits [7:0] for Dot L5-CS4 | | | | | | | | 00h |
| **pwm_bri189** | 2BDh | R/W | 16-bits PWM higher 8 bits [15:8] for Dot L5-CS4 | | | | | | | | 00h |
| **pwm_bri190** | 2BEh | R/W | 16-bits PWM lower 8 bits [7:0] for Dot L5-CS5 | | | | | | | | 00h |
| **pwm_bri191** | 2BFh | R/W | 16-bits PWM higher 8 bits [15:8] for Dot L5-CS5 | | | | | | | | 00h |
| **pwm_bri192** | 2C0h | R/W | 16-bits PWM lower 8 bits [7:0] for Dot L5-CS6 | | | | | | | | 00h |
| **pwm_bri193** | 2C1h | R/W | 16-bits PWM higher 8 bits [15:8] for Dot L5-CS6 | | | | | | | | 00h |
| **pwm_bri194** | 2C2h | R/W | 16-bits PWM lower 8 bits [7:0] for Dot L5-CS7 | | | | | | | | 00h |
| **pwm_bri195** | 2C3h | R/W | 16-bits PWM higher 8 bits [15:8] for Dot L5-CS7 | | | | | | | | 00h |
| **pwm_bri196** | 2C4h | R/W | 16-bits PWM lower 8 bits [7:0] for Dot L5-CS8 | | | | | | | | 00h |
| **pwm_bri197** | 2C5h | R/W | 16-bits PWM higher 8 bits [15:8] for Dot L5-CS8 | | | | | | | | 00h |
| **pwm_bri198** | 2C6h | R/W | 16-bits PWM lower 8 bits [7:0] for Dot L5-CS9 | | | | | | | | 00h |
| **pwm_bri199** | 2C7h | R/W | 16-bits PWM higher 8 bits [15:8] for Dot L5-CS9 | | | | | | | | 00h |
| **pwm_bri200** | 2C8h | R/W | 16-bits PWM lower 8 bits [7:0] for Dot L5-CS10 | | | | | | | | 00h |
| **pwm_bri201** | 2C9h | R/W | 16-bits PWM higher 8 bits [15:8] for Dot L5-CS10 | | | | | | | | 00h |
| **pwm_bri202** | 2CAh | R/W | 16-bits PWM lower 8 bits [7:0] for Dot L5-CS11 | | | | | | | | 00h |
| **pwm_bri203** | 2CBh | R/W | 16-bits PWM higher 8 bits [15:8] for Dot L5-CS11 | | | | | | | | 00h |
| **pwm_bri204** | 2CCh | R/W | 16-bits PWM lower 8 bits [7:0] for Dot L5-CS12 | | | | | | | | 00h |
| **pwm_bri205** | 2CDh | R/W | 16-bits PWM higher 8 bits [15:8] for Dot L5-CS12 | | | | | | | | 00h |
| **pwm_bri206** | 2CEh | R/W | 16-bits PWM lower 8 bits [7:0] for Dot L5-CS13 | | | | | | | | 00h |

Copyright © 2024 Texas Instruments Incorporated

| Register Acronym | Address | Type | D7 | D6 | D5 | D4 | D3 | D2 | D1 | D0 | Default |
|---|---|---|---|---|---|---|---|---|---|---|---|
| **pwm_bri207** | 2CFh | R/W | 16-bits PWM higher 8 bits [15:8] for Dot L5-CS13 | | | | | | | | 00h |
| **pwm_bri208** | 2D0h | R/W | 16-bits PWM lower 8 bits [7:0] for Dot L5-CS14 | | | | | | | | 00h |
| **pwm_bri209** | 2D1h | R/W | 16-bits PWM higher 8 bits [15:8] for Dot L5-CS14 | | | | | | | | 00h |
| **pwm_bri210** | 2D2h | R/W | 16-bits PWM lower 8 bits [7:0] for Dot L5-CS15 | | | | | | | | 00h |
| **pwm_bri211** | 2D3h | R/W | 16-bits PWM higher 8 bits [15:8] for Dot L5-CS15 | | | | | | | | 00h |
| **pwm_bri212** | 2D4h | R/W | 16-bits PWM lower 8 bits [7:0] for Dot L5-CS16 | | | | | | | | 00h |
| **pwm_bri213** | 2D5h | R/W | 16-bits PWM higher 8 bits [15:8] for Dot L5-CS16 | | | | | | | | 00h |
| **pwm_bri214** | 2D6h | R/W | 16-bits PWM lower 8 bits [7:0] for Dot L5-CS17 | | | | | | | | 00h |
| **pwm_bri215** | 2D7h | R/W | 16-bits PWM higher 8 bits [15:8] for Dot L5-CS17 | | | | | | | | 00h |
| **pwm_bri216** | 2D8h | R/W | 16-bits PWM lower 8 bits [7:0] for Dot L6-CS0 | | | | | | | | 00h |
| **pwm_bri217** | 2D9h | R/W | 16-bits PWM higher 8 bits [15:8] for Dot L6-CS0 | | | | | | | | 00h |
| **pwm_bri218** | 2DAh | R/W | 16-bits PWM lower 8 bits [7:0] for Dot L6-CS1 | | | | | | | | 00h |
| **pwm_bri219** | 2DBh | R/W | 16-bits PWM higher 8 bits [15:8] for Dot L6-CS1 | | | | | | | | 00h |
| **pwm_bri220** | 2DCh | R/W | 16-bits PWM lower 8 bits [7:0] for Dot L6-CS2 | | | | | | | | 00h |
| **pwm_bri221** | 2DDh | R/W | 16-bits PWM higher 8 bits [15:8] for Dot L6-CS2 | | | | | | | | 00h |
| **pwm_bri222** | 2DEh | R/W | 16-bits PWM lower 8 bits [7:0] for Dot L6-CS3 | | | | | | | | 00h |
| **pwm_bri223** | 2DFh | R/W | 16-bits PWM higher 8 bits [15:8] for Dot L6-CS3 | | | | | | | | 00h |
| **pwm_bri224** | 2E0h | R/W | 16-bits PWM lower 8 bits [7:0] for Dot L6-CS4 | | | | | | | | 00h |
| **pwm_bri225** | 2E1h | R/W | 16-bits PWM higher 8 bits [15:8] for Dot L6-CS4 | | | | | | | | 00h |
| **pwm_bri226** | 2E2h | R/W | 16-bits PWM lower 8 bits [7:0] for Dot L6-CS5 | | | | | | | | 00h |
| **pwm_bri227** | 2E3h | R/W | 16-bits PWM higher 8 bits [15:8] for Dot L6-CS5 | | | | | | | | 00h |
| **pwm_bri228** | 2E4h | R/W | 16-bits PWM lower 8 bits [7:0] for Dot L6-CS6 | | | | | | | | 00h |
| **pwm_bri229** | 2E5h | R/W | 16-bits PWM higher 8 bits [15:8] for Dot L6-CS6 | | | | | | | | 00h |
| **pwm_bri230** | 2E6h | R/W | 16-bits PWM lower 8 bits [7:0] for Dot L6-CS7 | | | | | | | | 00h |
| **pwm_bri231** | 2E7h | R/W | 16-bits PWM higher 8 bits [15:8] for Dot L6-CS7 | | | | | | | | 00h |
| **pwm_bri232** | 2E8h | R/W | 16-bits PWM lower 8 bits [7:0] for Dot L6-CS8 | | | | | | | | 00h |
| **pwm_bri233** | 2E9h | R/W | 16-bits PWM higher 8 bits [15:8] for Dot L6-CS8 | | | | | | | | 00h |
| **pwm_bri234** | 2EAh | R/W | 16-bits PWM lower 8 bits [7:0] for Dot L6-CS9 | | | | | | | | 00h |
| **pwm_bri235** | 2EBh | R/W | 16-bits PWM higher 8 bits [15:8] for Dot L6-CS9 | | | | | | | | 00h |
| **pwm_bri236** | 2ECh | R/W | 16-bits PWM lower 8 bits [7:0] for Dot L6-CS10 | | | | | | | | 00h |
| **pwm_bri237** | 2EDh | R/W | 16-bits PWM higher 8 bits [15:8] for Dot L6-CS10 | | | | | | | | 00h |
| **pwm_bri238** | 2EEh | R/W | 16-bits PWM lower 8 bits [7:0] for Dot L6-CS11 | | | | | | | | 00h |
| **pwm_bri239** | 2EFh | R/W | 16-bits PWM higher 8 bits [15:8] for Dot L6-CS11 | | | | | | | | 00h |
| **pwm_bri240** | 2F0h | R/W | 16-bits PWM lower 8 bits [7:0] for Dot L6-CS12 | | | | | | | | 00h |
| **pwm_bri241** | 2F1h | R/W | 16-bits PWM higher 8 bits [15:8] for Dot L6-CS12 | | | | | | | | 00h |
| **pwm_bri242** | 2F2h | R/W | 16-bits PWM lower 8 bits [7:0] for Dot L6-CS13 | | | | | | | | 00h |
| **pwm_bri243** | 2F3h | R/W | 16-bits PWM higher 8 bits [15:8] for Dot L6-CS13 | | | | | | | | 00h |
| **pwm_bri244** | 2F4h | R/W | 16-bits PWM lower 8 bits [7:0] for Dot L6-CS14 | | | | | | | | 00h |
| **pwm_bri245** | 2F5h | R/W | 16-bits PWM higher 8 bits [15:8] for Dot L6-CS14 | | | | | | | | 00h |
| **pwm_bri246** | 2F6h | R/W | 16-bits PWM lower 8 bits [7:0] for Dot L6-CS15 | | | | | | | | 00h |
| **pwm_bri247** | 2F7h | R/W | 16-bits PWM higher 8 bits [15:8] for Dot L6-CS15 | | | | | | | | 00h |
| **pwm_bri248** | 2F8h | R/W | 16-bits PWM lower 8 bits [7:0] for Dot L6-CS16 | | | | | | | | 00h |
| **pwm_bri249** | 2F9h | R/W | 16-bits PWM higher 8 bits [15:8] for Dot L6-CS16 | | | | | | | | 00h |
| **pwm_bri250** | 2FAh | R/W | 16-bits PWM lower 8 bits [7:0] for Dot L6-CS17 | | | | | | | | 00h |
| **pwm_bri251** | 2FBh | R/W | 16-bits PWM higher 8 bits [15:8] for Dot L6-CS17 | | | | | | | | 00h |


Copyright © 2024 Texas Instruments Incorporated

| Register Acronym | Address | Type | D7 | D6 | D5 | D4 | D3 | D2 | D1 | D0 | Default |
|---|---|---|---|---|---|---|---|---|---|---|---|
| **pwm_bri252** | 2FCh | R/W | 16-bits PWM lower 8 bits [7:0] for Dot L7-CS0 | | | | | | | | 00h |
| **pwm_bri253** | 2FDh | R/W | 16-bits PWM higher 8 bits [15:8] for Dot L7-CS0 | | | | | | | | 00h |
| **pwm_bri254** | 2FEh | R/W | 16-bits PWM lower 8 bits [7:0] for Dot L7-CS1 | | | | | | | | 00h |
| **pwm_bri255** | 2FFh | R/W | 16-bits PWM higher 8 bits [15:8] for Dot L7-CS1 | | | | | | | | 00h |
| **pwm_bri256** | 300h | R/W | 16-bits PWM lower 8 bits [7:0] for Dot L7-CS2 | | | | | | | | 00h |
| **pwm_bri257** | 301h | R/W | 16-bits PWM higher 8 bits [15:8] for Dot L7-CS2 | | | | | | | | 00h |
| **pwm_bri258** | 302h | R/W | 16-bits PWM lower 8 bits [7:0] for Dot L7-CS3 | | | | | | | | 00h |
| **pwm_bri259** | 303h | R/W | 16-bits PWM higher 8 bits [15:8] for Dot L7-CS3 | | | | | | | | 00h |
| **pwm_bri260** | 304h | R/W | 16-bits PWM lower 8 bits [7:0] for Dot L7-CS4 | | | | | | | | 00h |
| **pwm_bri261** | 305h | R/W | 16-bits PWM higher 8 bits [15:8] for Dot L7-CS4 | | | | | | | | 00h |
| **pwm_bri262** | 306h | R/W | 16-bits PWM lower 8 bits [7:0] for Dot L7-CS5 | | | | | | | | 00h |
| **pwm_bri263** | 307h | R/W | 16-bits PWM higher 8 bits [15:8] for Dot L7-CS5 | | | | | | | | 00h |
| **pwm_bri264** | 308h | R/W | 16-bits PWM lower 8 bits [7:0] for Dot L7-CS6 | | | | | | | | 00h |
| **pwm_bri265** | 309h | R/W | 16-bits PWM higher 8 bits [15:8] for Dot L7-CS6 | | | | | | | | 00h |
| **pwm_bri266** | 30Ah | R/W | 16-bits PWM lower 8 bits [7:0] for Dot L7-CS7 | | | | | | | | 00h |
| **pwm_bri267** | 30Bh | R/W | 16-bits PWM higher 8 bits [15:8] for Dot L7-CS7 | | | | | | | | 00h |
| **pwm_bri268** | 30Ch | R/W | 16-bits PWM lower 8 bits [7:0] for Dot L7-CS8 | | | | | | | | 00h |
| **pwm_bri269** | 30Dh | R/W | 16-bits PWM higher 8 bits [15:8] for Dot L7-CS8 | | | | | | | | 00h |
| **pwm_bri270** | 30Eh | R/W | 16-bits PWM lower 8 bits [7:0] for Dot L7-CS9 | | | | | | | | 00h |
| **pwm_bri271** | 30Fh | R/W | 16-bits PWM higher 8 bits [15:8] for Dot L7-CS9 | | | | | | | | 00h |
| **pwm_bri272** | 310h | R/W | 16-bits PWM lower 8 bits [7:0] for Dot L7-CS10 | | | | | | | | 00h |
| **pwm_bri273** | 311h | R/W | 16-bits PWM higher 8 bits [15:8] for Dot L7-CS10 | | | | | | | | 00h |
| **pwm_bri274** | 312h | R/W | 16-bits PWM lower 8 bits [7:0] for Dot L7-CS11 | | | | | | | | 00h |
| **pwm_bri275** | 313h | R/W | 16-bits PWM higher 8 bits [15:8] for Dot L7-CS11 | | | | | | | | 00h |
| **pwm_bri276** | 314h | R/W | 16-bits PWM lower 8 bits [7:0] for Dot L7-CS12 | | | | | | | | 00h |
| **pwm_bri277** | 315h | R/W | 16-bits PWM higher 8 bits [15:8] for Dot L7-CS12 | | | | | | | | 00h |
| **pwm_bri278** | 316h | R/W | 16-bits PWM lower 8 bits [7:0] for Dot L7-CS13 | | | | | | | | 00h |
| **pwm_bri279** | 317h | R/W | 16-bits PWM higher 8 bits [15:8] for Dot L7-CS13 | | | | | | | | 00h |
| **pwm_bri280** | 318h | R/W | 16-bits PWM lower 8 bits [7:0] for Dot L7-CS14 | | | | | | | | 00h |
| **pwm_bri281** | 319h | R/W | 16-bits PWM higher 8 bits [15:8] for Dot L7-CS14 | | | | | | | | 00h |
| **pwm_bri282** | 31Ah | R/W | 16-bits PWM lower 8 bits [7:0] for Dot L7-CS15 | | | | | | | | 00h |
| **pwm_bri283** | 31Bh | R/W | 16-bits PWM higher 8 bits [15:8] for Dot L7-CS15 | | | | | | | | 00h |
| **pwm_bri284** | 31Ch | R/W | 16-bits PWM lower 8 bits [7:0] for Dot L7-CS16 | | | | | | | | 00h |
| **pwm_bri285** | 31Dh | R/W | 16-bits PWM higher 8 bits [15:8] for Dot L7-CS16 | | | | | | | | 00h |
| **pwm_bri286** | 31Eh | R/W | 16-bits PWM lower 8 bits [7:0] for Dot L7-CS17 | | | | | | | | 00h |
| **pwm_bri287** | 31Fh | R/W | 16-bits PWM higher 8 bits [15:8] for Dot L7-CS17 | | | | | | | | 00h |

Copyright © 2024 Texas Instruments Incorporated

# 8 Application and Implementation

**Note**

Information in the following applications sections is not part of the TI component specification, and TI does not warrant its accuracy or completeness. TI's customers are responsible for determining suitability of components for their purposes, as well as validating and testing their design implementation to confirm system functionality.

## 8.1 Application Information

The LP5868T integrates 18 constant current sinks with 8 switching FETs and one LP5868T can drive up to 144 LED dots or 48 RGB pixels and achieve great dimming effect. In smart home, gaming keyboards, and other human-machine interaction applications, the device can greatly improve user experience with small amount of components.

## 8.2 Typical Application

### *8.2.1 Application*

Figure 8-1 shows an example of typical application, which uses one LP5868T to drive 66 common-anode RGB LEDs through I$^2$C communication.

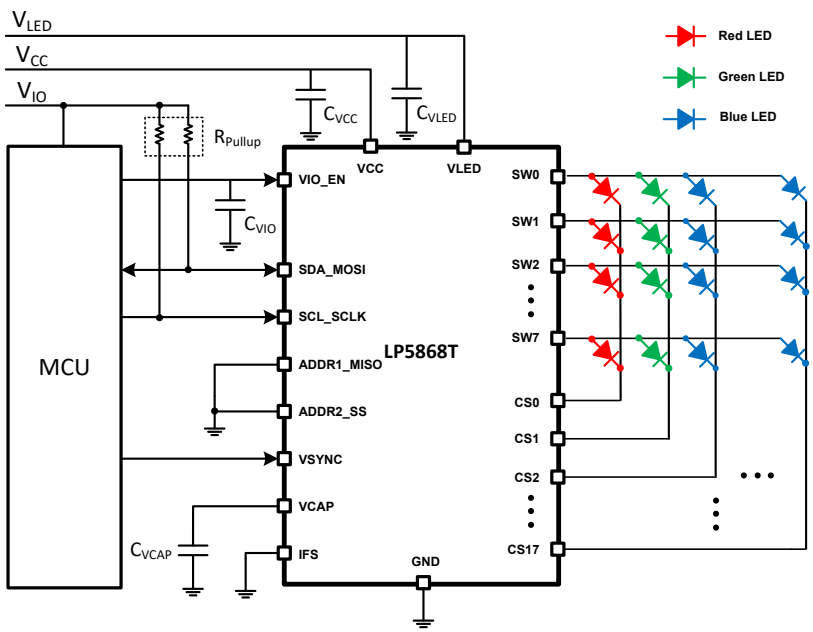


**Figure 8-1. Typical Application - LP5868T Driving 48 RGB LEDs (144 LED Dots)**


Copyright © 2024 Texas Instruments Incorporated

### 8.2.2 Design Requirements

**Table 8-1. Design Parameters**

| PARAMETER | VALUE |
|---|---|
| VCC / VIO | 3.3V |
| VLED | 5V |
| RGB LED count | 48 |
| Scan number | 8 |
| Interface | $I^2C$ |
| LED maximum average current (red, green, blue) | 12.5mA, 11.25mA, 10mA |
| LED maximum peak current (red, green, blue) | 100mA, 90mA, 80mA |

### 8.2.3 Detailed Design Procedure

LP5868T requires an external capacitor $C_{VCAP}$, whose value is 1µF connected from $V_{CAP}$ to GND for proper operation of internal LDO. The device must be placed as close to the device as possible.

TI recommends that 1-µF capacitors be placed between VCC / VLED with GND, and a 1nF capacitor placed between VIO with GND. Place the capacitors as close to the device as possible.

Pull-up resistors $R_{pull\text{-}up}$ are requirement for SCL and SDA when using $I^2C$ as communication method. In typical applications, TI recommends 1.8kΩ to 4.7kΩ resistors.

To decrease thermal dissipation from device to ambient, resistors $R_{CS}$ can optionally be placed in serial with the LED. Voltage drop on these resistors must left enough margins for VSAT to ensure the device works normally.

#### 8.2.3.1 Program Procedure

When selecting data refresh Mode 1, outputs are refreshed instantly after data is received.

When selecting data refresh Mode 2/3, VSYNC signal is required for synchronized display. Programming flow is showed as Figure 8-2. To display full pixel of last frame, VSYNC pulse must be sent to the device after the end of last PWM. Time between two pulses $t_{SYNC}$ must be larger than the whole PWM time of all Dots $t_{frame}$. Common selection like 60Hz, 90Hz, 120Hz or even higher refresh frequency can be supported. High pulse width longer than $t_{SYNC_H}$ is required at the beginning of each VSYNC frame, and data must not be write to PWM registers during high pulse width.

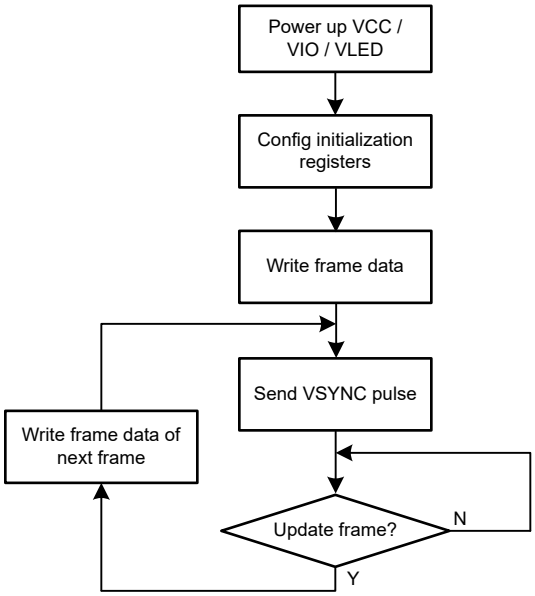


**Figure 8-2. Program Procedure**

### 8.2.4 Application Performance Plots

The following figures show the application performance plots.

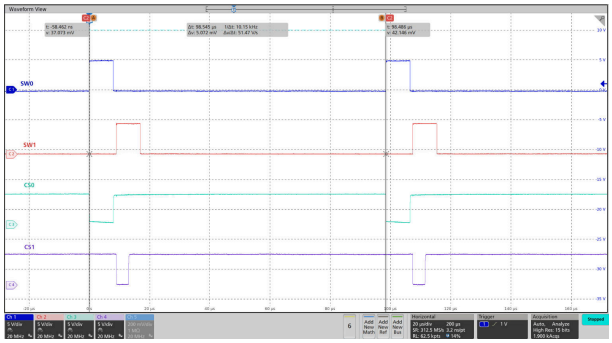


**Figure 8-3. Scan Lines and Current Sinks Waveforms of SW0, SW1, CS0, CS1**

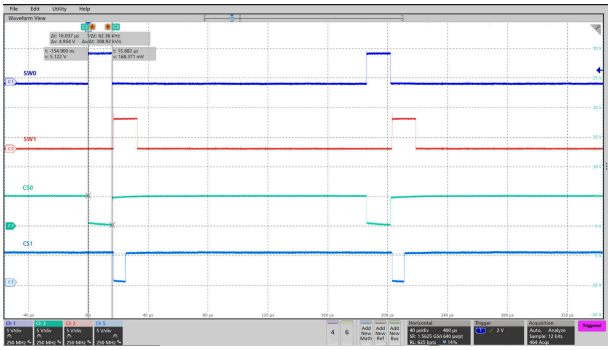


PWM frequency = 62.5kHz

**Figure 8-4. Scan Lines and Current Sinks Waveforms of SW0, SW1, CS0, CS1**

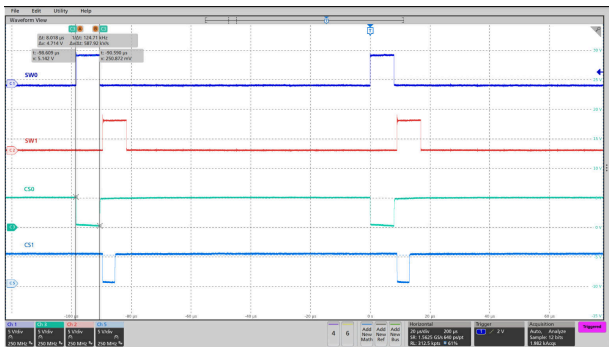


PWM frequency = 125kHz

**Figure 8-5. Scan Lines and Current Sinks Waveforms of SW0, SW1, CS0, CS1**

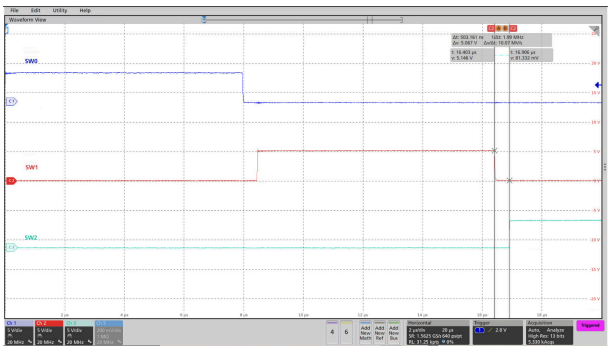


Switch blank time $t_{SW_BLK}$ = 0.5µs

**Figure 8-6. Scan Lines Switching Waveforms of SW0, SW1, SW2**

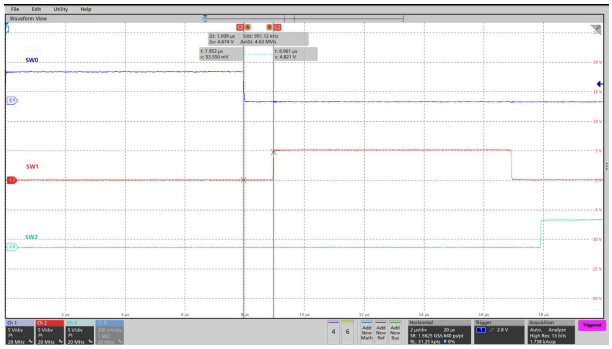


Switch blank time $t_{SW_BLK}$ = 1µs

**Figure 8-7. Scan Lines Switching Waveforms of SW0, SW1, SW2**

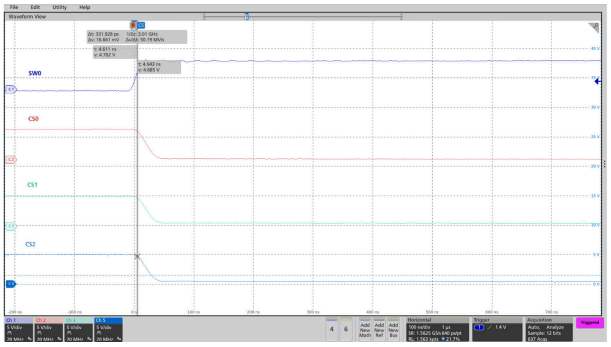


PWM_Phase_Shift = 0h

**Figure 8-8. PWM Phase Shift Disabled**


Copyright © 2024 Texas Instruments Incorporated

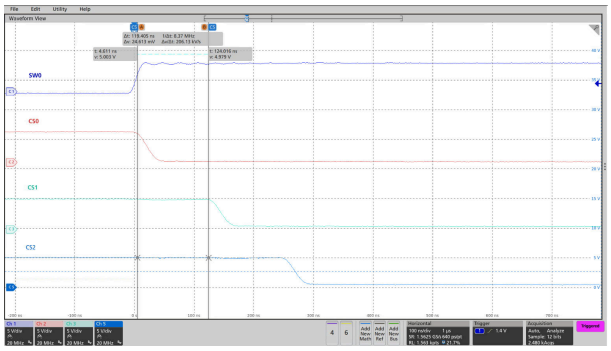


PWM_Phase_Shift = 1h

**Figure 8-9. PWM Phase Shift Enabled**

## 8.3 Power Supply Recommendations

### *8.3.1 VDD Input Supply Recommendations*

LP5868T is designed to operate from a 2.7V to 5.5V VDD voltage supply. This input supply must be well regulated and be able to provide the peak current required by the LED matrix. The resistance of the VDD supply rail must be low enough such that the input current transient does not cause the LP5868T VDD supply voltage to drop below the maximum POR voltage.

### *8.3.2 VLED Input Supply Recommendations*

LP5868T is designed to operate with a 2.7V to 5.5V VLED voltage supply. The VLED supply must be well regulated and able to provide the peak current required by the LED configuration without voltage drop, under load transients like start-up or rapid brightness change. The resistance of the input supply rail must be low enough so that the input current transient does not cause the VLED supply voltage to drop below LED $V_f$ + VSAT voltage.

### *8.3.3 VIO Input Supply Recommendations*

LP5868T is designed to operate with a 1.65V to 5.5V VIO_EN voltage supply. The VIO_EN supply must be well regulated and able to provide the peak current required by the LED configuration without voltage drop under load transients like startup or rapid brightness change.

## 8.4 Layout

### *8.4.1 Layout Guidelines*

Below guidelines for layout design can help to get a better on-board performance.

- The decoupling capacitors $C_{VCC}$ and $C_{VLED}$ for power supply must be close to the chip to have minimized the impact of high-frequency noise and ripple from power. $C_{VCAP}$ for internal LDO must be put as close to chip as possible. GND plane connections to $C_{VLED}$ and GND pins must be on TOP layer copper with multiple vias connecting to system ground plane. $C_{VIO}$ for internal enable block also must be put as close to chip as possible.
- The exposed thermal pad must be well soldered to the board, which can have better mechanical reliability. This action can optimize heat transfer so that increasing thermal performance. The AGND pin must be connected to thermal pad and system ground.
- The major heat flow path from the package to the ambient is through copper on the PCB. Several methods can help thermal performance. Below exposed thermal pad of the device, putting much vias through the PCB to other ground layer can dissipate more heat. Maximizing the copper coverage on the PCB can increase the thermal conductivity of the board.
- Low inductive and resistive path of switch load loop can help to provide a high slew rate. Therefore, path of VLED – SWx must be short and wide and avoid parallel wiring and narrow trace. Transient current in SWx pins is much larger than CSy pins, so that trace for SWx must be wider than CSy.

Copyright © 2024 Texas Instruments Incorporated

### 8.4.2 Layout Example

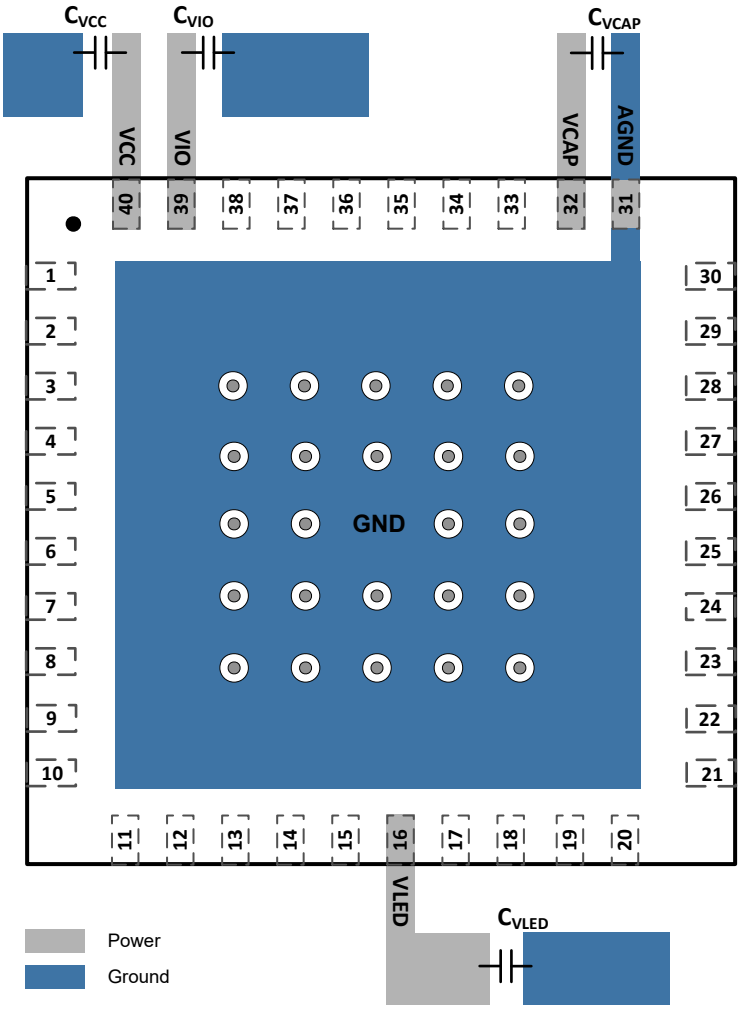


**Figure 8-10. LP5868T Layout Example**


Copyright © 2024 Texas Instruments Incorporated

# 9 Device and Documentation Support

TI offers an extensive line of development tools. Tools and software to evaluate the performance of the device, generate code, and develop solutions are listed below.

## 9.1 Receiving Notification of Documentation Updates

To receive notification of documentation updates, navigate to the device product folder on ti.com. Click on *Notifications* to register and receive a weekly digest of any product information that has changed. For change details, review the revision history included in any revised document.

## 9.2 Support Resources

TI E2E™ support forums are an engineer's go-to source for fast, verified answers and design help — straight from the experts. Search existing answers or ask your own question to get the quick design help you need.

Linked content is provided "AS IS" by the respective contributors. They do not constitute TI specifications and do not necessarily reflect TI's views; see TI's Terms of Use.

## 9.3 Trademarks

TI E2E™ is a trademark of Texas Instruments.
All trademarks are the property of their respective owners.

## 9.4 Electrostatic Discharge Caution

This integrated circuit can be damaged by ESD. Texas Instruments recommends that all integrated circuits be handled with appropriate precautions. Failure to observe proper handling and installation procedures can cause damage.

ESD damage can range from subtle performance degradation to complete device failure. Precision integrated circuits may be more susceptible to damage because very small parametric changes could cause the device not to meet its published specifications.

## 9.5 Glossary

| | |
|---|---|
| TI Glossary | This glossary lists and explains terms, acronyms, and definitions. |

# 10 Revision History

NOTE: Page numbers for previous revisions may differ from page numbers in the current version.

| Changes from Revision A (August 2023) to Revision B (November 2023) | Page |
|---|---|
| • Updated title to 11 × 18 LED High-Current Matrix Driver with 8-Bit Analog and 8-Bit or 16-Bit PWM Dimming. | 1 |

| Changes from Revision * (May 2023) to Revision A (August 2023) | Page |
|---|---|
| • Changed status from Advance Information to Production Data | 1 |

## 11 Mechanical, Packaging, and Orderable Information

The following pages include mechanical, packaging, and orderable information. This information is the most current data available for the designated devices. This data is subject to change without notice and revision of this document. For browser-based versions of this data sheet, refer to the left-hand navigation.


Copyright © 2024 Texas Instruments Incorporated

## PACKAGING INFORMATION

| Orderable part number | Status (1) | Material type (2) | Package \| Pins | Package qty \| Carrier | RoHS (3) | Lead finish/ Ball material (4) | MSL rating/ Peak reflow (5) | Op temp (°C) | Part marking (6) |
|---|---|---|---|---|---|---|---|---|---|
| LP5868TMRKPR | Active | Production | VQFN (RKP) \| 40 | 3000 \| LARGE T&R | Yes | NIPDAU | Level-1-260C-UNLIM | -55 to 125 | 5868TM |
| LP5868TMRKPR.A | Active | Production | VQFN (RKP) \| 40 | 3000 \| LARGE T&R | Yes | NIPDAU | Level-1-260C-UNLIM | -55 to 125 | 5868TM |
| LP5868TRKPR | Active | Production | VQFN (RKP) \| 40 | 3000 \| LARGE T&R | Yes | NIPDAU | Level-2-260C-1 YEAR | -40 to 85 | LP5868T |
| LP5868TRKPR.A | Active | Production | VQFN (RKP) \| 40 | 3000 \| LARGE T&R | Yes | NIPDAU | Level-2-260C-1 YEAR | -40 to 85 | LP5868T |

(1) **Status:** For more details on status, see our product life cycle.

(2) **Material type:** When designated, preproduction parts are prototypes/experimental devices, and are not yet approved or released for full production. Testing and final process, including without limitation quality assurance, reliability performance testing, and/or process qualification, may not yet be complete, and this item is subject to further changes or possible discontinuation. If available for ordering, purchases will be subject to an additional waiver at checkout, and are intended for early internal evaluation purposes only. These items are sold without warranties of any kind.

(3) **RoHS values:** Yes, No, RoHS Exempt. See the TI RoHS Statement for additional information and value definition.

(4) **Lead finish/Ball material:** Parts may have multiple material finish options. Finish options are separated by a vertical ruled line. Lead finish/Ball material values may wrap to two lines if the finish value exceeds the maximum column width.

(5) **MSL rating/Peak reflow:** The moisture sensitivity level ratings and peak solder (reflow) temperatures. In the event that a part has multiple moisture sensitivity ratings, only the lowest level per JEDEC standards is shown. Refer to the shipping label for the actual reflow temperature that will be used to mount the part to the printed circuit board.

(6) **Part marking:** There may be an additional marking, which relates to the logo, the lot trace code information, or the environmental category of the part.

Multiple part markings will be inside parentheses. Only one part marking contained in parentheses and separated by a "~" will appear on a part. If a line is indented then it is a continuation of the previous line and the two combined represent the entire part marking for that device.

**Important Information and Disclaimer:**The information provided on this page represents TI's knowledge and belief as of the date that it is provided. TI bases its knowledge and belief on information provided by third parties, and makes no representation or warranty as to the accuracy of such information. Efforts are underway to better integrate information from third parties. TI has taken and continues to take reasonable steps to provide representative and accurate information but may not have conducted destructive testing or chemical analysis on incoming materials and chemicals. TI and TI suppliers consider certain information to be proprietary, and thus CAS numbers and other limited information may not be available for release.

In no event shall TI's liability arising out of such information exceed the total purchase price of the TI part(s) at issue in this document sold by TI to Customer on an annual basis.

## TAPE AND REEL INFORMATION

**REEL DIMENSIONS**

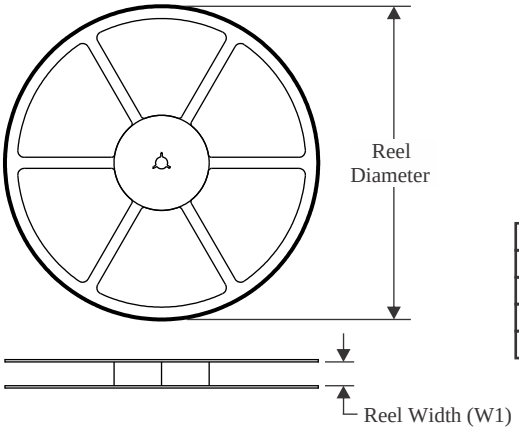


**TAPE DIMENSIONS**

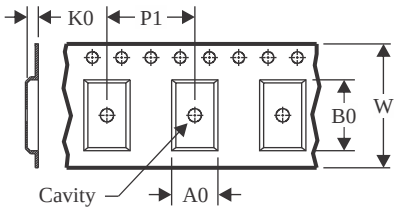


| | |
|---|---|
| A0 | Dimension designed to accommodate the component width |
| B0 | Dimension designed to accommodate the component length |
| K0 | Dimension designed to accommodate the component thickness |
| W | Overall width of the carrier tape |
| P1 | Pitch between successive cavity centers |

**QUADRANT ASSIGNMENTS FOR PIN 1 ORIENTATION IN TAPE**

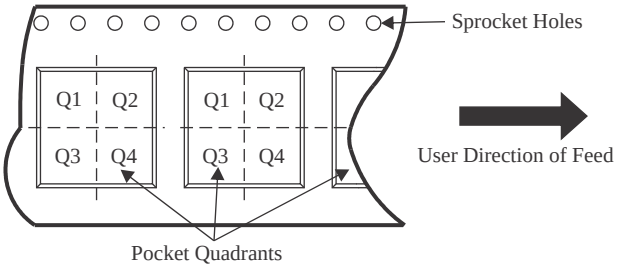


*All dimensions are nominal

| Device | Package Type | Package Drawing | Pins | SPQ | Reel Diameter (mm) | Reel Width W1 (mm) | A0 (mm) | B0 (mm) | K0 (mm) | P1 (mm) | W (mm) | Pin1 Quadrant |
|---|---|---|---|---|---|---|---|---|---|---|---|---|
| LP5868TMRKPR | VQFN | RKP | 40 | 3000 | 330.0 | 12.4 | 5.3 | 5.3 | 1.1 | 8.0 | 12.0 | Q2 |
| LP5868TRKPR | VQFN | RKP | 40 | 3000 | 330.0 | 12.4 | 5.3 | 5.3 | 1.1 | 8.0 | 12.0 | Q2 |

TAPE AND REEL BOX DIMENSIONS

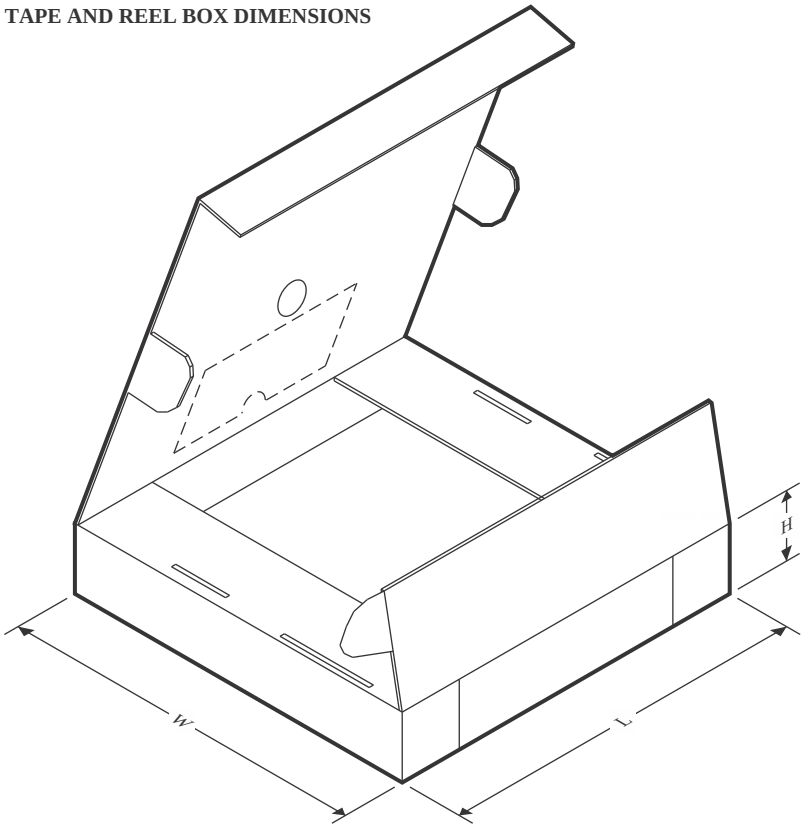


*All dimensions are nominal

| Device | Package Type | Package Drawing | Pins | SPQ | Length (mm) | Width (mm) | Height (mm) |
|---|---|---|---|---|---|---|---|
| LP5868TMRKPR | VQFN | RKP | 40 | 3000 | 367.0 | 367.0 | 35.0 |
| LP5868TRKPR | VQFN | RKP | 40 | 3000 | 367.0 | 367.0 | 35.0 |

# GENERIC PACKAGE VIEW

## RKP 40

## VQFN - 1 mm max height

**5 x 5, 0.4 mm pitch**

PLASTIC QUAD FLATPACK - NO LEAD

This image is a representation of the package family, actual package may vary.
Refer to the product data sheet for package details.

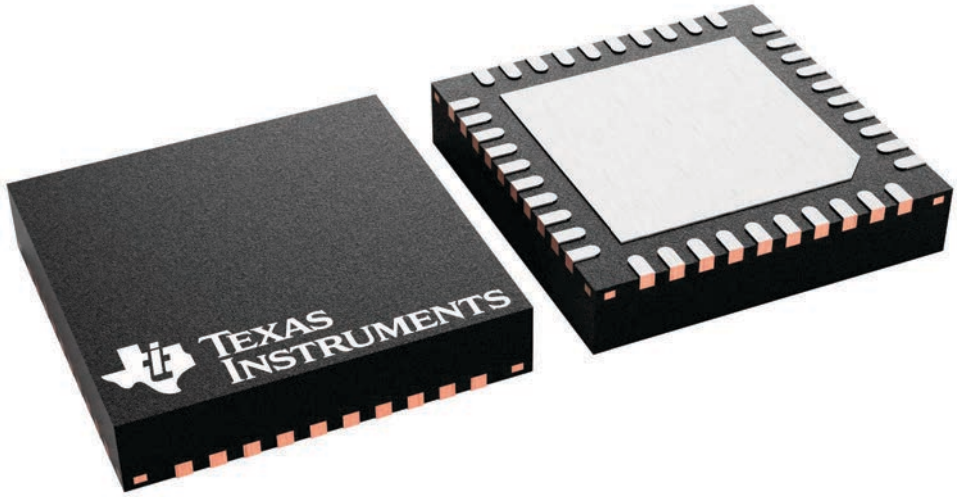


4229305/A

PLASTIC QUAD FLATPACK- NO LEAD

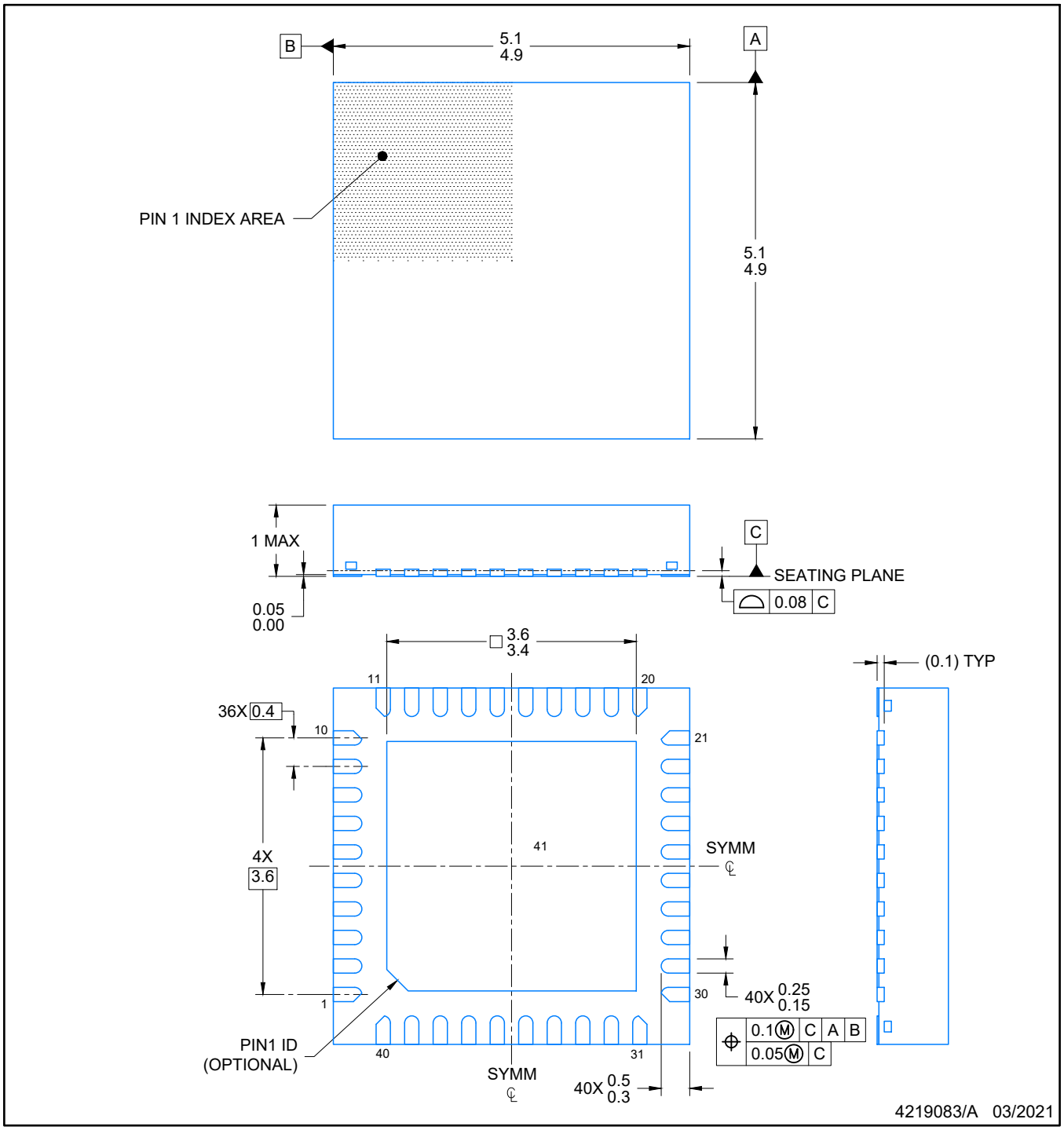


NOTES:

1. All linear dimensions are in millimeters. Any dimensions in parenthesis are for reference only. Dimensioning and tolerancing per ASME Y14.5M.
2. This drawing is subject to change without notice.
3. The package thermal pad must be soldered to the printed circuit board for optimal thermal and mechanical performance.

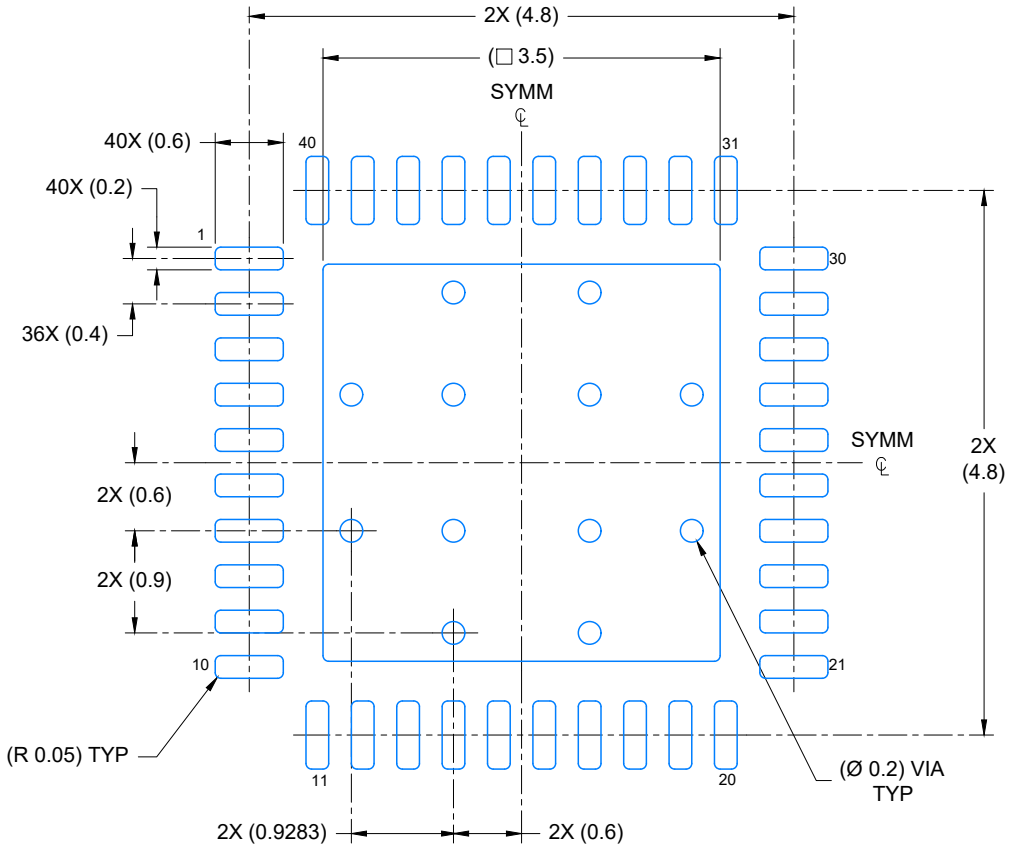


LAND PATTERN EXAMPLE
EXPOSED METAL SHOWN
SCALE: 15X

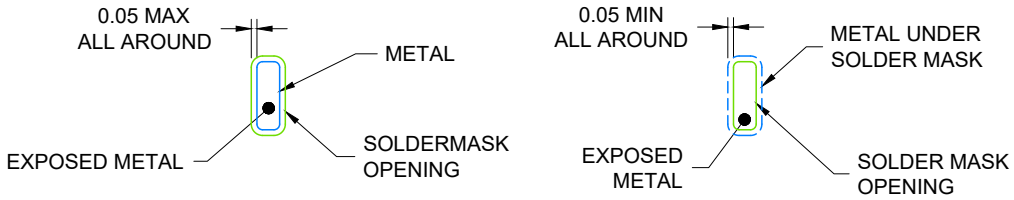


NON- SOLDER MASK DEFINED (PREFERRED)

SOLDER MASK DEFINED

SOLDER MASK DETAILS

4219083/A 03/2021

NOTES: (continued)

4. This package is designed to be soldered to a thermal pad on the board. For more information, see Texas Instruments literature number SLUA271 (www.ti.com/lit/slua271).
5. Vias are optional depending on application, refer to device data sheet. If any vias are implemented, refer to their locations shown on this view. It is recommended that vias under paste be filled, plugged or tented.

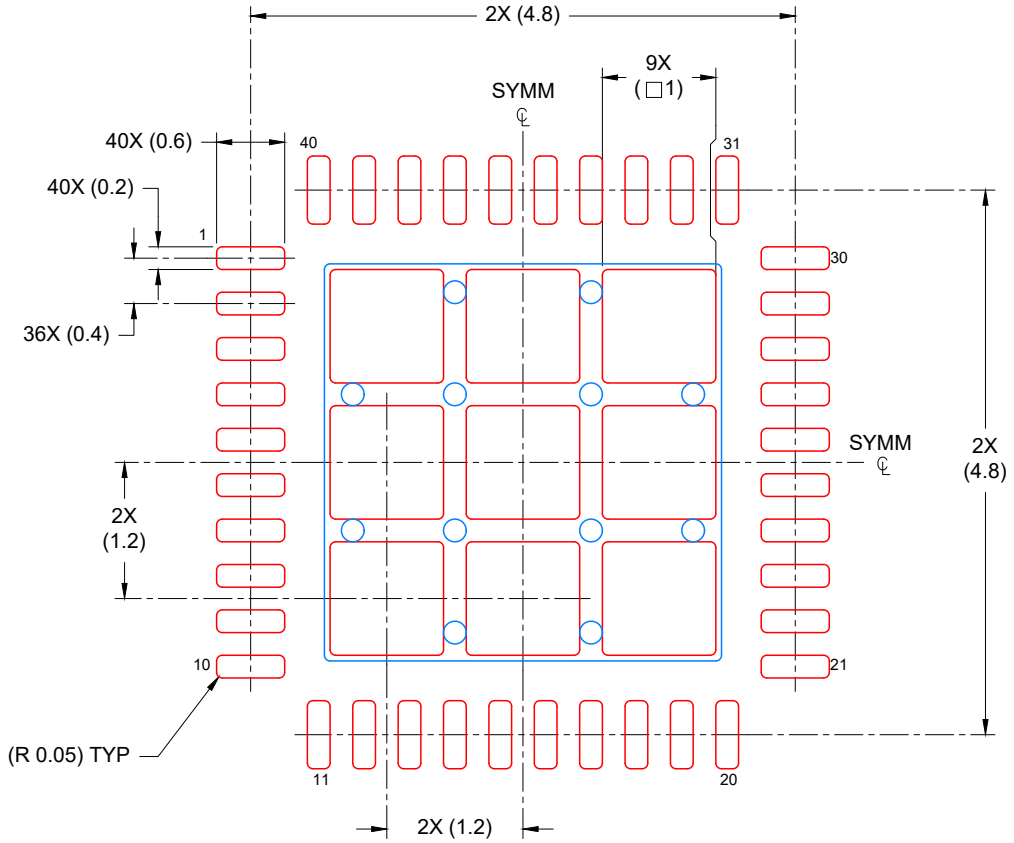


SOLDER PASTE EXAMPLE
BASED ON 0.125 mm THICK STENCIL

EXPOSED PAD
74% PRINTED COVERAGE BY AREA
SCALE: 15X

4219083/A 03/2021

NOTES: (continued)

6. Laser cutting apertures with trapezoidal walls and rounded corners may offer better paste release. IPC-7525 may have alternate design recommendations.

# IMPORTANT NOTICE AND DISCLAIMER

TI PROVIDES TECHNICAL AND RELIABILITY DATA (INCLUDING DATA SHEETS), DESIGN RESOURCES (INCLUDING REFERENCE DESIGNS), APPLICATION OR OTHER DESIGN ADVICE, WEB TOOLS, SAFETY INFORMATION, AND OTHER RESOURCES “AS IS” AND WITH ALL FAULTS, AND DISCLAIMS ALL WARRANTIES, EXPRESS AND IMPLIED, INCLUDING WITHOUT LIMITATION ANY IMPLIED WARRANTIES OF MERCHANTABILITY, FITNESS FOR A PARTICULAR PURPOSE OR NON-INFRINGEMENT OF THIRD PARTY INTELLECTUAL PROPERTY RIGHTS.

These resources are intended for skilled developers designing with TI products. You are solely responsible for (1) selecting the appropriate TI products for your application, (2) designing, validating and testing your application, and (3) ensuring your application meets applicable standards, and any other safety, security, regulatory or other requirements.

These resources are subject to change without notice. TI grants you permission to use these resources only for development of an application that uses the TI products described in the resource. Other reproduction and display of these resources is prohibited. No license is granted to any other TI intellectual property right or to any third party intellectual property right. TI disclaims responsibility for, and you will fully indemnify TI and its representatives against, any claims, damages, costs, losses, and liabilities arising out of your use of these resources.

TI’s products are provided subject to TI’s Terms of Sale or other applicable terms available either on ti.com or provided in conjunction with such TI products. TI’s provision of these resources does not expand or otherwise alter TI’s applicable warranties or warranty disclaimers for TI products.

TI objects to and rejects any additional or different terms you may have proposed.

Mailing Address: Texas Instruments, Post Office Box 655303, Dallas, Texas 75265
Copyright © 2025, Texas Instruments Incorporated