SN74LVCH8T245 8-BIT Dual-Supply Bus Transceiver With Configurable Level-Shifting, Voltage Translation, and 3-State Outputs

1 Features

- Control inputs (DIR and $\overline{OE}$) V_{IH} and V_{IL} levels are referenced to V_{CCA}
- Bus hold on data inputs eliminates the need for external pullup and pulldown resistors
- V_{CC} isolation
- Fully configurable dual-rail design
- I_{off} supports Partial-Power-Down node operation
- Latch-up performance exceeds 100 mA per JESD 78, class II
- ESD protection exceeds JESD 22

2 Applications

- Personal electronics
- Industrial
- Enterprise
- Telecommunications

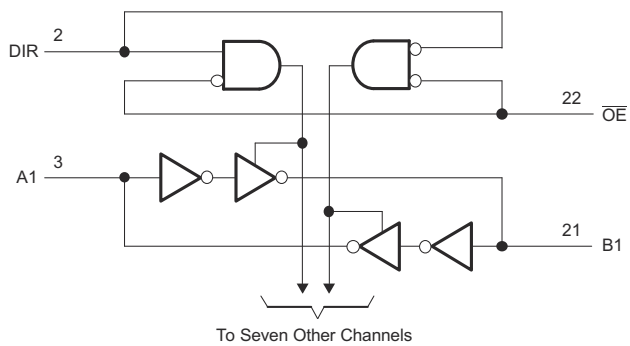

Logic Diagram (Positive Logic)

3 Description

The SN74LVCH8T245 is an 8-bit noninverting bus transceiver that uses two separate configurable power-supply rails. The A port is designed to track V_{CCA}, which accepts any supply voltage from 1.65 V to 5.5 V. The B port is designed to track V_{CCB}, which also accepts any supply voltage from 1.65 V to 5.5 V. This allows for universal low-voltage bidirectional translation between any of the 1.8-V, 2.5-V, 3.3-V, and 5.5-V voltage nodes.

The SN74LVCH8T245 is designed for asynchronous communication between two data buses. The logic levels of the direction-control (DIR) input and the output-enable ($\overline{OE}$) input activate either the B-port outputs, the A-port outputs, or place both output ports into a high-impedance state. The device transmits data from the A bus to the B bus when the B-port outputs are activated, and from the B bus to the A bus when the A-port outputs are activated. The input circuitry on both A and B ports are always active.

Active bus-hold circuitry holds unused or undriven inputs at a valid logic state. Use of pullup or pulldown resistors with the bus-hold circuitry is not recommended. This device is fully specified for partial-power-down applications using I_{off}. The I_{off} circuitry disables the outputs, preventing damaging current backflow through the device. The V_{CC} isolation feature ensures that if either V_{CCA} or V_{CCB} is at GND, then the outputs are in the high-impedance state. To ensure the high-impedance state during power up or power down, $\overline{OE}$ should be tied to V_{CCA} through a pullup resistor; the minimum value of the resistor is determined by the current-sinking capability of the driver.

The SN74LVCH8T245 is designed so that the control pins (DIR and $\overline{OE}$) are referenced to V_{CCA}.

Package Information(1)

PART NUMBER	PACKAGE	BODY SIZE (NOM)
SN74LVCH8T245	DB (SSOP, 24)	8.65 mm × 3.90 mm
	DGV (TVSOP, 24)	5.00 mm × 4.40 mm
	PW (TSSOP, 24)	7.80 mm × 4.40 mm
	RHL (VQFN, 24)	5.50 mm × 3.50 mm

(1) For all available packages, see the orderable addendum at the end of the data sheet.

An IMPORTANT NOTICE at the end of this data sheet addresses availability, warranty, changes, use in safety-critical applications, intellectual property matters and other important disclaimers. PRODUCTION DATA.

Table of Contents

1 Features....1
2 Applications....1
3 Description....1
4 Revision History....2
5 Pin Configuration and Functions....3
6 Specifications....4
6.1 Absolute Maximum Ratings....4
6.2 ESD Ratings....4
6.3 Recommended Operating Conditions....4
6.4 Thermal Information....5
6.5 Electrical Characteristics....6
6.6 Switching Characteristics: V_{CCA} = 1.8 V ± 0.15 V....7
6.7 Switching Characteristics: V_{CCA} = 2.5 V ± 0.2 V....8
6.8 Switching Characteristics: V_{CCA} = 3.3 V ± 0.3 V....9
6.9 Switching Characteristics: V_{CCA} = 5 V ± 0.5 V....10
6.10 Operating Characteristics....11
6.11 Typical Characteristics....11
7 Parameter Measurement Information....12
8 Detailed Description....13
8.1 Overview....13
8.2 Functional Block Diagram....13
8.3 Feature Description....13
8.4 Device Functional Modes....14
9 Application and Implementation....15
9.1 Application Information....15
9.2 Typical Application....15
10 Power Supply Recommendations....17
11 Layout....18
11.1 Layout Guidelines....18
11.2 Layout Example....18
12 Device and Documentation Support....19
12.1 Documentation Support....19
12.2 Receiving Notification of Documentation Updates....19
12.3 Support Resources....19
12.4 Trademarks....19
12.5 Electrostatic Discharge Caution....19
12.6 Glossary....19
13 Mechanical, Packaging, and Orderable Information....19

4 Revision History

NOTE: Page numbers for previous revisions may differ from page numbers in the current version.

Changes from Revision B (January 2016) to Revision C (December 2022)	Page
• Updated the numbering format for tables, figures, and cross-references throughout the document	1
• Updated thermals for PW package	5
• Removed the *Supports High-Speed Translation* and added the *Balanced High-Drive CMOS Push-Pull Outputs* section	13

Changes from Revision A (February 2007) to Revision B (January 2016)	Page
• Added *ESD Ratings* table, *Feature Description* section, *Device Functional Modes*, *Application and Implementation* section, *Power Supply Recommendations* section, *Layout* section, *Device and Documentation Support* section, and *Mechanical, Packaging, and Orderable Information* section	1

Copyright © 2022 Texas Instruments Incorporated

5 Pin Configuration and Functions

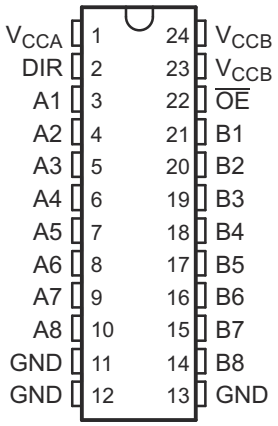

Figure 5-1. DB, DGV, or PW Packages, 24-Pin SSOP, TVSOP, or TSSOP (Top View)

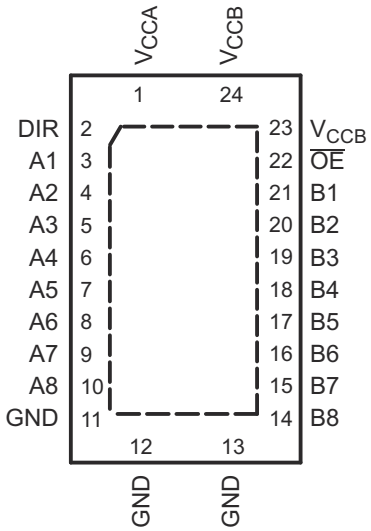

Figure 5-2. RHL Package, 24-Pin VQFN (Top View)

Table 5-1. Pin Functions

PIN			TYPE[(1)]	DESCRIPTION
NAME	SSOP, TVSOP, TSSOP	VQFN		
A1	3	3	I/O	Input/output A1. Referenced to V_{CCA}.
A2	4	4	I/O	Input/output A2. Referenced to V_{CCA}.
A3	5	5	I/O	Input/output A3. Referenced to V_{CCA}.
A4	6	6	I/O	Input/output A4. Referenced to V_{CCA}.
A5	7	7	I/O	Input/output A5. Referenced to V_{CCA}.
A6	8	8	I/O	Input/output A6. Referenced to V_{CCA}.
A7	9	9	I/O	Input/output A7. Referenced to V_{CCA}.
A8	10	10	I/O	Input/output A8. Referenced to V_{CCA}.
B1	21	21	I/O	Input/output B1. Referenced to V_{CCB}.
B2	20	20	I/O	Input/output B2. Referenced to V_{CCB}.
B3	19	19	I/O	Input/output B3. Referenced to V_{CCB}.
B4	18	18	I/O	Input/output B4. Referenced to V_{CCB}.
B5	17	17	I/O	Input/output B5. Referenced to V_{CCB}.
B6	16	16	I/O	Input/output B6. Referenced to V_{CCB}.
B7	15	15	I/O	Input/output B7. Referenced to V_{CCB}.
B8	14	14	I/O	Input/output B8. Referenced to V_{CCB}.
DIR	2	2	I	Direction-control signal. Referenced to V_{CCA}.
$\overline{OE}$	22	22	I	3-state output-mode enables. Pull $\overline{OE}$ high to place all outputs in 3-state mode. Referenced to V_{CCA}.
V_{CCA}	1	1	—	A-port supply voltage. 1.65 V ≤ V_{CCA} ≤ 5.5 V
V_{CCB}	23, 24	23, 24	—	B-port supply voltage. 1.65 V ≤ V_{CCA} ≤ 5.5 V
GND	11, 12, 13	11, 12, 13	—	Ground

(1) I = input, O = output

Copyright © 2022 Texas Instruments Incorporated

6 Specifications

6.1 Absolute Maximum Ratings

over operating free-air temperature range (unless otherwise noted)[1]

		MIN	MAX	UNIT
Supply voltage	V_{CCA} and V_{CCB}	–0.5	6.5	V
Input voltage[2]	I/O ports (A port)	–0.5	6.5	V
	I/O ports (B port)	–0.5	6.5	
	Control inputs	–0.5	6.5	
Voltage range applied to any output in the high-impedance or power-off state[2]	A port	–0.5	6.5	V
	B port	–0.5	6.5	
Voltage range applied to any output in the high or low state[2] [3]	A port	–0.5	V_{CCA} + 0.5	V
	B port	–0.5	V_{CCB} + 0.5	
Input clamp current	V_I < 0		–50	mA
Output clamp current	V_O < 0		–50	mA
Continuous output current, I_O			±50	mA
Continuous through current	V_{CCA}, V_{CCB}, and GND		±100	mA
Junction temperature, T_J		–40	150	°C
Storage temperature, T_{stg}		–65	150	°C

(1) Stresses beyond those listed under *Absolute Maximum Ratings* may cause permanent damage to the device. These are stress ratings only, which do not imply functional operation of the device at these or any other conditions beyond those indicated under *Section 6.3*. Exposure to absolute-maximum-rated conditions for extended periods may affect device reliability.
(2) The input and output negative-voltage ratings may be exceeded if the input and output current ratings are observed.
(3) The output positive-voltage rating may be exceeded up to 6.5 V maximum if the output current rating is observed.

6.2 ESD Ratings

			VALUE	UNIT
$V_{(ESD)}$	Electrostatic discharge	Human-body model (HBM), per ANSI/ESDA/JEDEC JS-001[1]	±4000	V
		Charged-device model (CDM), per JEDEC specification JESD22-C101[2]	±1000	
		Machine model (MM)	±200	

(1) JEDEC document JEP155 states that 500 V HBM allows safe manufacturing with a standard ESD control process.
(2) JEDEC document JEP157 states that 250 V CDM allows safe manufacturing with a standard ESD control process.

6.3 Recommended Operating Conditions

over operating free-air temperature range (unless otherwise noted)[1] [2] [3]

				MIN	MAX	UNIT
V_{CCA}	Supply voltage			1.65	5.5	V
V_{CCB}				1.65	5.5	
V_{IH}	High-level input voltage[1]	Data inputs[4]	V_{CCI} = 1.65 V to 4.5 V	V_{CCI} × 0.65		V
			V_{CCI} = 2.3 V to 2.7 V	1.7		
			V_{CCI} = 3 V to 3.6 V	2		
			V_{CCI} = 4.5 V to 5.5 V	V_{CCI} × 0.7		
V_{IL}	Low-level input voltage[1]	Data inputs[4]	V_{CCI} = 1.65 V to 4.5 V		V_{CCI} × 0.35	V
			V_{CCI} = 2.3 V to 2.7 V		0.7	
			V_{CCI} = 3 V to 3.6 V		0.8	
			V_{CCI} = 4.5 V to 5.5 V		V_{CCI} × 0.3	

Copyright © 2022 Texas Instruments Incorporated

6.3 Recommended Operating Conditions (continued)

over operating free-air temperature range (unless otherwise noted)[1] [2] [3]

				MIN	MAX	UNIT
V_{IH}	High-level input voltage	Control inputs (referenced to V_{CCA})[5]	V_{CCI} = 1.65 V to 4.5 V	V_{CCA} × 0.65		V
			V_{CCI} = 2.3 V to 2.7 V	1.7		
			V_{CCI} = 3 V to 3.6 V	2		
			V_{CCI} = 4.5 V to 5.5 V	V_{CCA} × 0.7		
V_{IL}	Low-level input voltage	Control inputs (referenced to V_{CCA})[5]	V_{CCI} = 1.65 V to 4.5 V		V_{CCA} × 0.35	V
			V_{CCI} = 2.3 V to 2.7 V		0.7	
			V_{CCI} = 3 V to 3.6 V		0.8	
			V_{CCI} = 4.5 V to 5.5 V		V_{CCA} × 0.3	
V_I	Input voltage	Control inputs[3]		0	5.5	V
$V_{I/O}$	Input/output voltage[2]	Active state		0	V_{CCO}	V
		3-State		0	5.5	
I_{OH}	High-level output current		V_{CCO} = 1.65 V to 4.5 V		–4	mA
			V_{CCO} = 2.3 V to 2.7 V		–8	
			V_{CCO} = 3 V to 3.6 V		–24	
			V_{CCO} = 4.5 V to 5.5 V		–32	
I_{OL}	Low-level output current		V_{CCO} = 1.65 V to 4.5 V		4	mA
			V_{CCO} = 2.3 V to 2.7 V		8	
			V_{CCO} = 3 V to 3.6 V		24	
			V_{CCO} = 4.5 V to 5.5 V		32	
Δt/Δv	Input transition rise or fall rate	Data inputs	V_{CCI} = 1.65 V to 4.5 V		20	ns/V
			V_{CCI} = 2.3 V to 2.7 V		20	
			V_{CCI} = 3 V to 3.6 V		10	
			V_{CCI} = 4.5 V to 5.5 V		5	
T_A	Operating free-air temperature			–40	85	°C

(1) V_{CCI} is the V_{CC} associated with the data input port.
(2) V_{CCO} is the V_{CC} associated with the output port.
(3) All unused control inputs of the device must be held at V_{CCA} or GND to ensure proper device operation and minimize power consumption. See *Implications of Slow or Floating CMOS Inputs*, SCBA004.
(4) For V_{CCI} values not specified in the data sheet, V_{IH} min = V_{CCI} × 0.7 V, V_{IL} (max) = V_{CCI} × 0.3 V.
(5) For V_{CCA} values not specified in the data sheet, V_{IH} min = V_{CCA} × 0.7 V, V_{IL} (max) = V_{CCA} × 0.3 V.

6.4 Thermal Information

THERMAL METRIC[1]		SN74LVCH8T245				UNIT
		DB (SSOP)	DGV (TVSOP)	PW (TSSOP)	RHL (VQFN)	
		24 PINS	24 PINS	24 PINS	24 PINS	
$R_{\theta JA}$	Junction-to-ambient thermal resistance	88.5	91.1	100.6	37.4	°C/W
$R_{\theta JC(top)}$	Junction-to-case (top) thermal resistance	48.7	23.7	44.7	38.1	°C/W
$R_{\theta JB}$	Junction-to-board thermal resistance	44.1	44.5	55.8	15.2	°C/W
ψ_{JT}	Junction-to-top characterization parameter	12.8	0.6	6.8	0.7	°C/W
ψ_{JB}	Junction-to-board characterization parameter	43.6	44.1	55.4	15.2	°C/W
$R_{\theta JC(bot)}$	Junction-to-case (bottom) thermal resistance	—	—	—	4.3	°C/W

(1) For more information about traditional and new thermal metrics, see the *Semiconductor and IC Package Thermal Metrics* application report, SPRA953.

6.5 Electrical Characteristics

All typical limits apply over T_A = 25°C, and all maximum and minimum limits apply over T_A = –40°C to 85°C (unless otherwise noted).[(1) (2)]

PARAMETER		TEST CONDITIONS				MIN	TYP	MAX	UNIT
V_{OH}	High-level output voltage[(1)]	I_{OH} = –100 µA, V_I = V_{IH}		V_{CCA} = V_{CCB} = 1.65 V to 4.5 V		V_{CCO} = 0.1			V
		I_{OH} = –4 mA, V_I = V_{IH}		V_{CCA} = V_{CCB} = 1.65 V		1.2			
		I_{OH} = –8 mA, V_I = V_{IH}		V_{CCA} = V_{CCB} = 2.3 V		1.9			
		I_{OH} = –24 mA, V_I = V_{IH}		V_{CCA} = V_{CCB} = 3 V		2.4			
		I_{OH} = –32 mA, V_I = V_{IH}		V_{CCA} = V_{CCB} = 4.5 V		3.8			
V_{OL}	Low-level output voltage	I_{OL} = 100 µA, V_I = V_{IL}		V_{CCA} = V_{CCB} = 1.65 V to 4.5 V				0.1	V
		I_{OL} = 4 mA, V_I = V_{IL}		V_{CCA} = V_{CCB} = 1.65 V				0.45	
		I_{OL} = 8 mA, V_I = V_{IL}		V_{CCA} = V_{CCB} = 2.3 V				0.3	
		I_{OL} = 24 mA, V_I = V_{IL}		V_{CCA} = V_{CCB} = 3 V				0.55	
		I_{OL} = 32 mA, V_I = V_{IL}		V_{CCA} = V_{CCB} = 4.5 V				0.55	
I_I	Control inputs	V_I = V_{CCA} or GND		V_{CCA} = V_{CCB} = 1.65 V to 4.5 V			±0.5	±2	µA
I_{BHL} [(3)]	Bus-hold low sustaining current	V_I = 0.58 V		V_{CCA} = V_{CCB} = 1.65 V		15			µA
		V_I = 0.7 V		V_{CCA} = V_{CCB} = 2.3 V		45			
		V_I = 0.8 V		V_{CCA} = V_{CCB} = 3 V		75			
		V_I = 1.35 V		V_{CCA} = V_{CCB} = 4.5 V		100			
I_{BHH} [(4)]	Bus-hold high sustaining current	V_I = 1.07 V		V_{CCA} = V_{CCB} = 1.65 V		–15			µA
		V_I = 1.7 V		V_{CCA} = V_{CCB} = 2.3 V		–45			
		V_I = 2 V		V_{CCA} = V_{CCB} = 3 V		–75			
		V_I = 3.15 V		V_{CCA} = V_{CCB} = 4.5 V		–100			
I_{BHLO} [(5)]	Bus-hold low overdrive current	V_I = 0 to V_{CC}		V_{CCA} = V_{CCB} = 1.95 V		200			µA
				V_{CCA} = V_{CCB} = 2.7 V		300			
				V_{CCA} = V_{CCB} = 3.6 V		500			
				V_{CCA} = V_{CCB} = 5.5 V		900			
I_{BHHO} [(6)]	Bus-hold high overdrive current	V_I = 0 to V_{CC}		V_{CCA} = V_{CCB} = 1.95 V		–200			µA
				V_{CCA} = V_{CCB} = 2.7 V		–300			
				V_{CCA} = V_{CCB} = 3.6 V		–500			
				V_{CCA} = V_{CCB} = 5.5 V		–900			
I_{off}	Input and output power-off leakage current	V_I or V_O = 0 to 5.5 V		V_{CCA} = 0 V, V_{CCB} = 0 to 5.5 V	A Port		±0.5	±2	µA
				V_{CCA} = 0 to 5.5 V, V_{CCB} = 0 V	B Port		±0.5	±2	
I_{OZ}	Off-state output current	V_O = V_{CCO} or GND, V_I = V_{CCI} or GND	$\overline{OE}$ = V_{IH}	V_{CCA} = V_{CCB} = 1.65 V to 4.5 V	A Port, B Port			±2	µA
			$\overline{OE}$ = X	V_{CCA} = 0 V, V_{CCB} = 5.5 V	B Port			±2	
				V_{CCA} = 5.5 V, V_{CCB} = 0 V	A Port			±2	
I_{CCA}	Supply current A port	V_I = V_{CCI} or GND, I_O = 0		V_{CCA} = V_{CCB} = 1.65 V to 4.5 V				20	µA
				V_{CCA} = 5 V, V_{CCB} = 0 V				20	
				V_{CCA} = 0 V, V_{CCB} = 5 V				–2	
I_{CCB}	Supply current B port	V_I = V_{CCI} or GND, I_O = 0		V_{CCA} = V_{CCB} = 1.65 V to 4.5 V				20	µA
				V_{CCA} = 5 V, V_{CCB} = 0 V				–2	
				V_{CCA} = 0 V, V_{CCB} = 5 V				20	
	Combined supply current	V_I = V_{CCI} or GND, I_O = 0		V_{CCA} = V_{CCB} = 1.65 V to 4.5 V				30	µA

Copyright © 2022 Texas Instruments Incorporated

6.5 Electrical Characteristics (continued)

All typical limits apply over T_A = 25°C, and all maximum and minimum limits apply over T_A = –40°C to 85°C (unless otherwise noted).(1) (2)

PARAMETER		TEST CONDITIONS		MIN	TYP	MAX	UNIT
ΔI_{CCA}	Supply-current change DIR	DIR at V_{CCA} - 0.6 V, B port = open, A port at V_{CCA} or GND	V_{CCA} = V_{CCB} = 3 to 5.5 V			50	µA
C_i	Input capacitance control inputs	V_I = V_{CCA} or GND	V_{CCA} = V_{CCB} = 3.3 V		4	5	pF
C_{io}	Input and output capacitance A or B port	V_O = $V_{CCA/B}$ or GND	V_{CCA} = V_{CCB} = 3.3 V		8.5	10	pF

(1) V_{CCO} is the V_{CC} associated with the output port.
(2) V_{CCI} is the V_{CC} associated with the input port.
(3) The bus-hold circuit can sink at least the minimum low sustaining current at the V_{IL} maximum. I_{BHL} should be measured after lowering V_{IN} to GND and then raising it to V_{IL} maximum.
(4) The bus-hold circuit can source at least the minimum high sustaining current at V_{IH} min. I_{BHH} should be measured after raising V_{IN} to V_{CC} and then lowering it to V_{IH} min.
(5) An external driver must source at least I_{BHLO} to switch this node from low to high.
(6) An external driver must sink at least I_{BHHO} to switch this node from high to low.

6.6 Switching Characteristics: V_{CCA} = 1.8 V ± 0.15 V

over recommended operating free-air temperature range, V_{CCA} = 1.8 V ± 0.15 V (unless otherwise noted) (see Figure 7-1)

PARAMETER	FROM (INPUT)	TO (OUTPUT)	TEST CONDITIONS	MIN	MAX	UNIT
t_{PLH}, t_{PHL}	A	B	V_{CCB} = 1.8 V ± 0.15 V	1.7	21.9	ns
			V_{CCB} = 2.5 V ± 0.2 V	1.3	9.2	
			V_{CCB} = 3.3 V ± 0.3 V	1	7.4	
			V_{CCB} = 5 V ± 0.5 V	0.4	7.1	
t_{PLH}, t_{PHL}	B	A	V_{CCB} = 1.8 V ± 0.15 V	0.9	23.8	ns
			V_{CCB} = 2.5 V ± 0.2 V	0.8	23.6	
			V_{CCB} = 3.3 V ± 0.3 V	0.7	23.4	
			V_{CCB} = 5 V ± 0.5 V	0.7	23.4	
t_{PHZ}, t_{PLZ}	$\overline{OE}$	A	V_{CCB} = 1.8 V ± 0.15 V	1.5	29.6	ns
			V_{CCB} = 2.5 V ± 0.2 V	1.5	29.4	
			V_{CCB} = 3.3 V ± 0.3 V	1.5	29.3	
			V_{CCB} = 5 V ± 0.5 V	1.4	29.2	
t_{PHZ}, t_{PLZ}	$\overline{OE}$	B	V_{CCB} = 1.8 V ± 0.15 V	2.4	32.2	ns
			V_{CCB} = 2.5 V ± 0.2 V	1.9	13.1	
			V_{CCB} = 3.3 V ± 0.3 V	1.7	12	
			V_{CCB} = 5 V ± 0.5 V	1.3	10.3	
t_{PZH}, t_{PZL}	$\overline{OE}$	A	V_{CCB} = 1.8 V ± 0.15 V	0.4	24	ns
			V_{CCB} = 2.5 V ± 0.2 V	0.4	23.8	
			V_{CCB} = 3.3 V ± 0.3 V	0.4	23.7	
			V_{CCB} = 5 V ± 0.5 V	0.4	23.7	
t_{PZH}, t_{PZL}	$\overline{OE}$	B	V_{CCB} = 1.8 V ± 0.15 V	1.8	32	ns
			V_{CCB} = 2.5 V ± 0.2 V	1.5	16	
			V_{CCB} = 3.3 V ± 0.3 V	1.2	12.6	
			V_{CCB} = 5 V ± 0.5 V	0.9	10.8	

Copyright © 2022 Texas Instruments Incorporated

6.7 Switching Characteristics: V_{CCA} = 2.5 V ± 0.2 V

over recommended operating free-air temperature range, V_{CCA} = 2.5 V ± 0.2 V (unless otherwise noted) (see Figure 7-1)

PARAMETER	FROM (INPUT)	TO (OUTPUT)	TEST CONDITIONS	MIN	MAX	UNIT
t_{PLH}, t_{PHL}	A	B	V_{CCB} = 1.8 V ± 0.15 V	1.5	21.4	ns
			V_{CCB} = 2.5 V ± 0.2 V	1.2	9	
			V_{CCB} = 3.3 V ± 0.3 V	0.8	6.2	
			V_{CCB} = 5 V ± 0.5 V	0.6	4.8	
t_{PLH}, t_{PHL}	B	A	V_{CCB} = 1.8 V ± 0.15 V	1.2	9.3	ns
			V_{CCB} = 2.5 V ± 0.2 V	1	9.1	
			V_{CCB} = 3.3 V ± 0.3 V	1	8.9	
			V_{CCB} = 5 V ± 0.5 V	0.9	8.8	
t_{PHZ}, t_{PLZ}	$\overline{OE}$	A	V_{CCB} = 1.8 V ± 0.15 V	1.4	9	ns
			V_{CCB} = 2.5 V ± 0.2 V	1.4	9	
			V_{CCB} = 3.3 V ± 0.3 V	1.4	9	
			V_{CCB} = 5 V ± 0.5 V	1.4	9	
t_{PHZ}, t_{PLZ}	$\overline{OE}$	B	V_{CCB} = 1.8 V ± 0.15 V	2.3	29.6	ns
			V_{CCB} = 2.5 V ± 0.2 V	1.8	11	
			V_{CCB} = 3.3 V ± 0.3 V	1.7	9.3	
			V_{CCB} = 5 V ± 0.5 V	0.9	6.9	
t_{PZH}, t_{PZL}	$\overline{OE}$	A	V_{CCB} = 1.8 V ± 0.15 V	1	10.9	ns
			V_{CCB} = 2.5 V ± 0.2 V	1	10.9	
			V_{CCB} = 3.3 V ± 0.3 V	1	10.9	
			V_{CCB} = 5 V ± 0.5 V	1	10.9	
t_{PZH}, t_{PZL}	$\overline{OE}$	B	V_{CCB} = 1.8 V ± 0.15 V	1.7	28.2	ns
			V_{CCB} = 2.5 V ± 0.2 V	1.5	12.9	
			V_{CCB} = 3.3 V ± 0.3 V	1.2	9.4	
			V_{CCB} = 5 V ± 0.5 V	1	6.9	

Copyright © 2022 Texas Instruments Incorporated

6.8 Switching Characteristics: V_{CCA} = 3.3 V ± 0.3 V

over recommended operating free-air temperature range, V_{CCA} = 3.3 V ± 0.3 V (unless otherwise noted) (see Figure 7-1)

PARAMETER	FROM (INPUT)	TO (OUTPUT)	TEST CONDITIONS	MIN	MAX	UNIT
t_{PLH}, t_{PHL}	A	B	V_{CCB} = 1.8 V ± 0.15 V	1.5	21.2	ns
			V_{CCB} = 2.5 V ± 0.2 V	1.1	8.8	
			V_{CCB} = 3.3 V ± 0.3 V	0.8	6.2	
			V_{CCB} = 5 V ± 0.5 V	0.5	4.4	
t_{PLH}, t_{PHL}	B	A	V_{CCB} = 1.8 V ± 0.15 V	0.8	7.2	ns
			V_{CCB} = 2.5 V ± 0.2 V	0.8	6.2	
			V_{CCB} = 3.3 V ± 0.3 V	0.7	6.1	
			V_{CCB} = 5 V ± 0.5 V	0.6	6	
t_{PHZ}, t_{PLZ}	$\overline{OE}$	A	V_{CCB} = 1.8 V ± 0.15 V	1.6	8.2	ns
			V_{CCB} = 2.5 V ± 0.2 V	1.6	8.2	
			V_{CCB} = 3.3 V ± 0.3 V	1.6	8.2	
			V_{CCB} = 5 V ± 0.5 V	1.6	8.2	
t_{PHZ}, t_{PLZ}	$\overline{OE}$	B	V_{CCB} = 1.8 V ± 0.15 V	2.1	29	ns
			V_{CCB} = 2.5 V ± 0.2 V	1.7	10.3	
			V_{CCB} = 3.3 V ± 0.3 V	1.5	8.6	
			V_{CCB} = 5 V ± 0.5 V	0.8	6.3	
t_{PZH}, t_{PZL}	$\overline{OE}$	A	V_{CCB} = 1.8 V ± 0.15 V	0.8	8.1	ns
			V_{CCB} = 2.5 V ± 0.2 V	0.8	8.1	
			V_{CCB} = 3.3 V ± 0.3 V	0.8	8.1	
			V_{CCB} = 5 V ± 0.5 V	0.8	8.1	
t_{PZH}, t_{PZL}	$\overline{OE}$	B	V_{CCB} = 1.8 V ± 0.15 V	1.8	27.7	ns
			V_{CCB} = 2.5 V ± 0.2 V	1.4	12.4	
			V_{CCB} = 3.3 V ± 0.3 V	1.1	8.5	
			V_{CCB} = 5 V ± 0.5 V	0.9	6.4	

Copyright © 2022 Texas Instruments Incorporated

6.9 Switching Characteristics: V_{CCA} = 5 V ± 0.5 V

over recommended operating free-air temperature range, V_{CCA} = 5 V ± 0.5 V (unless otherwise noted) (see Figure 7-1)

PARAMETER	FROM (INPUT)	TO (OUTPUT)	TEST CONDITIONS	MIN	MAX	UNIT
t_{PLH}, t_{PHL}	A	B	V_{CCB} = 1.8 V ± 0.15 V	1.5	21.4	ns
			V_{CCB} = 2.5 V ± 0.2 V	1	8.8	
			V_{CCB} = 3.3 V ± 0.3 V	0.7	6	
			V_{CCB} = 5 V ± 0.5 V	0.4	4.2	
t_{PLH}, t_{PHL}	B	A	V_{CCB} = 1.8 V ± 0.15 V	0.7	7	ns
			V_{CCB} = 2.5 V ± 0.2 V	0.4	4.8	
			V_{CCB} = 3.3 V ± 0.3 V	0.3	4.5	
			V_{CCB} = 5 V ± 0.5 V	0.3	4.3	
t_{PHZ}, t_{PLZ}	$\overline{OE}$	A	V_{CCB} = 1.8 V ± 0.15 V	0.3	5.4	ns
			V_{CCB} = 2.5 V ± 0.2 V	0.3	5.4	
			V_{CCB} = 3.3 V ± 0.3 V	0.3	5.4	
			V_{CCB} = 5 V ± 0.5 V	0.3	5.4	
t_{PHZ}, t_{PLZ}	$\overline{OE}$	B	V_{CCB} = 1.8 V ± 0.15 V	2	28.7	ns
			V_{CCB} = 2.5 V ± 0.2 V	1.6	9.7	
			V_{CCB} = 3.3 V ± 0.3 V	1.4	8	
			V_{CCB} = 5 V ± 0.5 V	0.7	5.7	
t_{PZH}, t_{PZL}	$\overline{OE}$	A	V_{CCB} = 1.8 V ± 0.15 V	0.7	6.4	ns
			V_{CCB} = 2.5 V ± 0.2 V	0.7	6.4	
			V_{CCB} = 3.3 V ± 0.3 V	0.7	6.4	
			V_{CCB} = 5 V ± 0.5 V	0.7	6.4	
t_{PZH}, t_{PZL}	$\overline{OE}$	B	V_{CCB} = 1.8 V ± 0.15 V	1.5	27.6	ns
			V_{CCB} = 2.5 V ± 0.2 V	1.3	11.4	
			V_{CCB} = 3.3 V ± 0.3 V	1	8.1	
			V_{CCB} = 5 V ± 0.5 V	0.9	6.5	

Copyright © 2022 Texas Instruments Incorporated

6.10 Operating Characteristics

T_A = 25°C

PARAMETER[1]		TEST CONDITIONS		TYP	UNIT
C_{pdA} [2]	A-port input, B-port output	C_L = 0, f = 10 MHz, t_r = t_f = 1 ns	V_{CCA} = V_{CCB} = 1.8 V	2	pF
			V_{CCA} = V_{CCB} = 2.5 V	2	
			V_{CCA} = V_{CCB} = 3.3 V	2	
			V_{CCA} = V_{CCB} = 5 V	3	
	B-port input, A-port output	C_L = 0, f = 10 MHz, t_r = t_f = 1 ns	V_{CCA} = V_{CCB} = 1.8 V	12	
			V_{CCA} = V_{CCB} = 2.5 V	13	
			V_{CCA} = V_{CCB} = 3.3 V	13	
			V_{CCA} = V_{CCB} = 5 V	16	
C_{pdB} [2]	A-port input, B-port output	C_L = 0, f = 10 MHz, t_r = t_f = 1 ns	V_{CCA} = V_{CCB} = 1.8 V	13	pF
			V_{CCA} = V_{CCB} = 2.5 V	13	
			V_{CCA} = V_{CCB} = 3.3 V	14	
			V_{CCA} = V_{CCB} = 5 V	16	
	B-port input, A-port output	C_L = 0, f = 10 MHz, t_r = t_f = 1 ns	V_{CCA} = V_{CCB} = 1.8 V	2	
			V_{CCA} = V_{CCB} = 2.5 V	2	
			V_{CCA} = V_{CCB} = 3.3 V	2	
			V_{CCA} = V_{CCB} = 5 V	3	

(1) See *CMOS Power Consumption and Cpd Calculation*, SCAA035.
(2) Power dissipation capacitance per transceiver.

6.11 Typical Characteristics

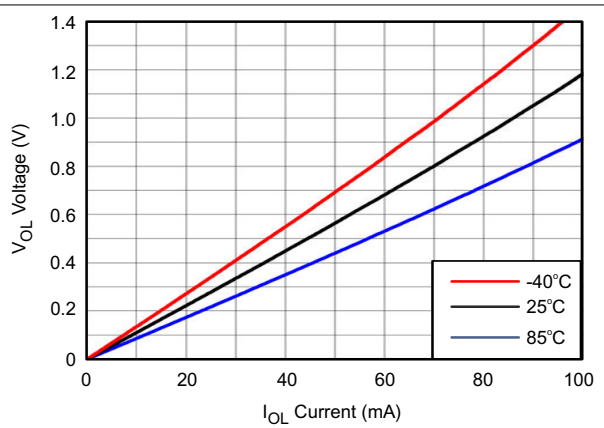

Figure 6-1. Voltage vs Current

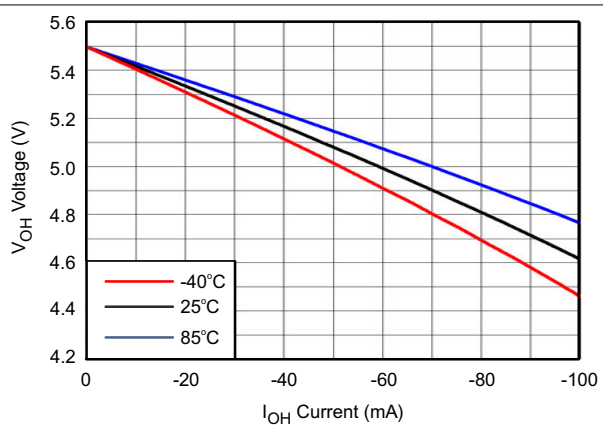

Figure 6-2. Voltage vs Current

7 Parameter Measurement Information

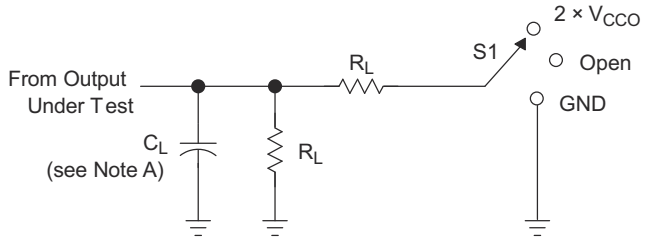

LOAD CIRCUIT

TEST	S1
t_{pd}	Open
t_{PLZ}/t_{PZL}	2 × V_{CCO}
t_{PHZ}/t_{PZH}	GND

V_{CCO}	C_L	R_L	V_{TP}
1.8 V ± 0.15 V	15 pF	2 kW	0.15 V
2.5 V ± 0.2 V	15 pF	2 kW	0.15 V
3.3 V ± 0.3 V	15 pF	2 kW	0.3 V
5 V ± 0.5 V	15 pF	2 kW	0.3 V

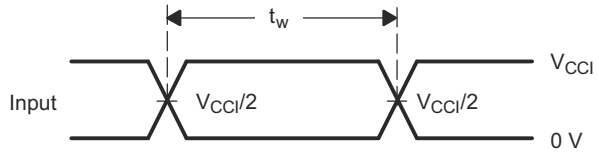

VOLTAGE WAVEFORMS
PULSE DURATION

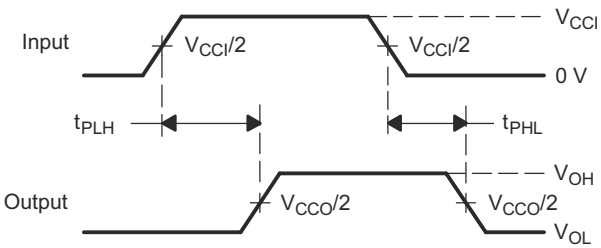

VOLTAGE WAVEFORMS
PROPAGATION DELAY TIMES

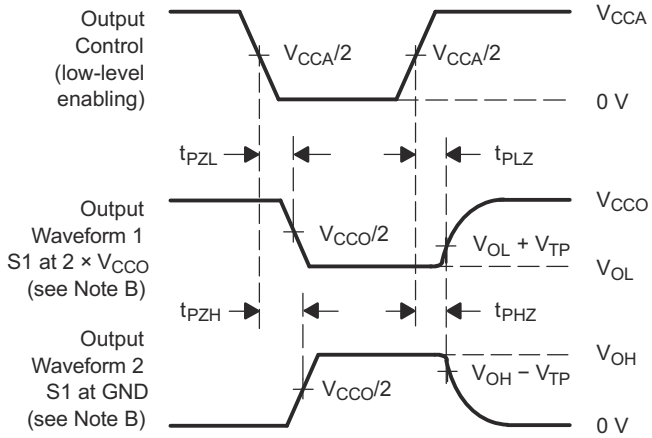

VOLTAGE WAVEFORMS
ENABLE AND DISABLE TIMES

NOTES:
A. C_L includes probe and jig capacitance.
B. Waveform 1 is for an output with internal conditions such that the output is low, except when disabled by the output control. Waveform 2 is for an output with internal conditions such that the output is high, except when disabled by the output control.
C. All input pulses are supplied by generators having the following characteristics: PRR 10 MHz, Z_O = 50 W, dv/dt ≥ 1 V/ns.
D. The outputs are measured one at a time, with one transition per measurement.
E. t_{PLZ} and t_{PHZ} are the same as t_{dis}.
F. t_{PZL} and t_{PZH} are the same as t_{en}.
G. t_{PLH} and t_{PHL} are the same as t_{pd}.
H. V_{CCI} is the V_{CC} associated with the input port.
I. V_{CCO} is the V_{CC} associated with the output port.
J. All parameters and waveforms are not applicable to all devices.

Figure 7-1. Load Circuit and Voltage Waveforms

Copyright © 2022 Texas Instruments Incorporated

8 Detailed Description

8.1 Overview

The SN74LVCH8T245 is an 8-bit, dual supply noninverting voltage level translator. Pins A1 through A4, and the control pins (DIR and $\overline{OE}$) are referenced to V_{CCA}, while pins B1 through B4 are referenced to V_{CCB}. Both the A port and B port can accept I/O voltages ranging from 1.65 V to 5.5 V. The high on DIR allows data transmission from Port A to Port B, and a low on DIR allows data transmission from Port B to Port A. For more information, see *AVC Logic Family Technology and Applications*.

8.2 Functional Block Diagram

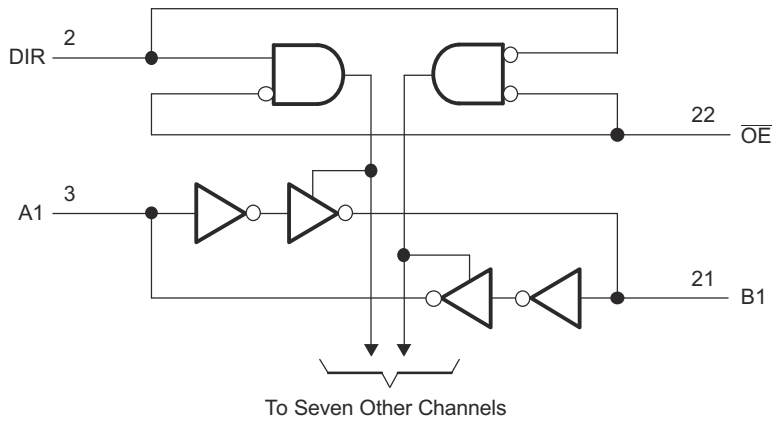

8.3 Feature Description

8.3.1 Fully Configurable Dual-Rail Design

Both V_{CCA} and V_{CCB} can be supplied at any voltage from 1.65 V to 5.5 V, making the device suitable for translating between any of the voltage nodes: 1.8 V, 2.5 V, 3.3 V, and 5 V.

8.3.2 Partial-Power-Down Mode Operation

I_{off} circuitry disables the outputs, preventing damaging current backflow through the device when it is powered down. This can occur in applications where subsections of a system are powered down (partial power down) to reduce power consumption. The maximum leakage into or out of any input or output pin on the device is specified by I_{off} in the *Electrical Characteristics.*

8.3.3 Active Bus Hold Circuitry

Active bus-hold circuitry holds unused or undriven inputs at a valid logic state, which helps with board space savings and reduced component costs. Use of pullup or pulldown resistors with the bus-hold circuitry is not recommended as this eliminates the bus-hold feature.

8.3.4 Balanced High-Drive CMOS Push-Pull Outputs

A balanced output allows the device to sink and source similar currents. The high drive capability of this device creates fast edges into light loads so routing and load conditions should be considered to prevent ringing. Additionally, the outputs of this device are capable of driving larger currents than the device can sustain without being damaged. Two outputs can be connected together for 2X stronger output drive strength. The electrical and thermal limits defined in the *Absolute Maximum Ratings* must be followed at all times.

8.3.5 V_{CC} Isolation

The V_{CC} isolation feature ensures that if either V_{CCA} or V_{CCB} are at GND (or < 0.4 V), both ports will be in a high-impedance state (I_{OZ} shown in *Electrical Characteristics*). This prevents false logic levels from being presented to either bus.

8.4 Device Functional Modes

Table 8-1 lists the functional modes of the SN74LVCH8T245.

Table 8-1. Function Table (Each 8-Bit Section)

CONTROL INPUTS[1]		OUTPUT CIRCUITS		OPERATION
$\overline{OE}$	DIR	A PORT	B PORT	
L	L	Enabled	Hi-Z	B data to A bus
L	H	Hi-Z	Enabled	A data to B bus
H	X	Hi-Z	Hi-Z	Isolation

(1) Input circuits of the data I/Os are always active.

Copyright © 2022 Texas Instruments Incorporated

9 Application and Implementation

Note

Information in the following applications sections is not part of the TI component specification, and TI does not warrant its accuracy or completeness. TI's customers are responsible for determining suitability of components for their purposes, as well as validating and testing their design implementation to confirm system functionality.

9.1 Application Information

The SN74LVCH8T245 device can be used in level-translation applications for interfacing devices or systems operating at different interface voltages with one another. The maximum output current can be up to 32 mA when device is powered by 5 V.

9.2 Typical Application

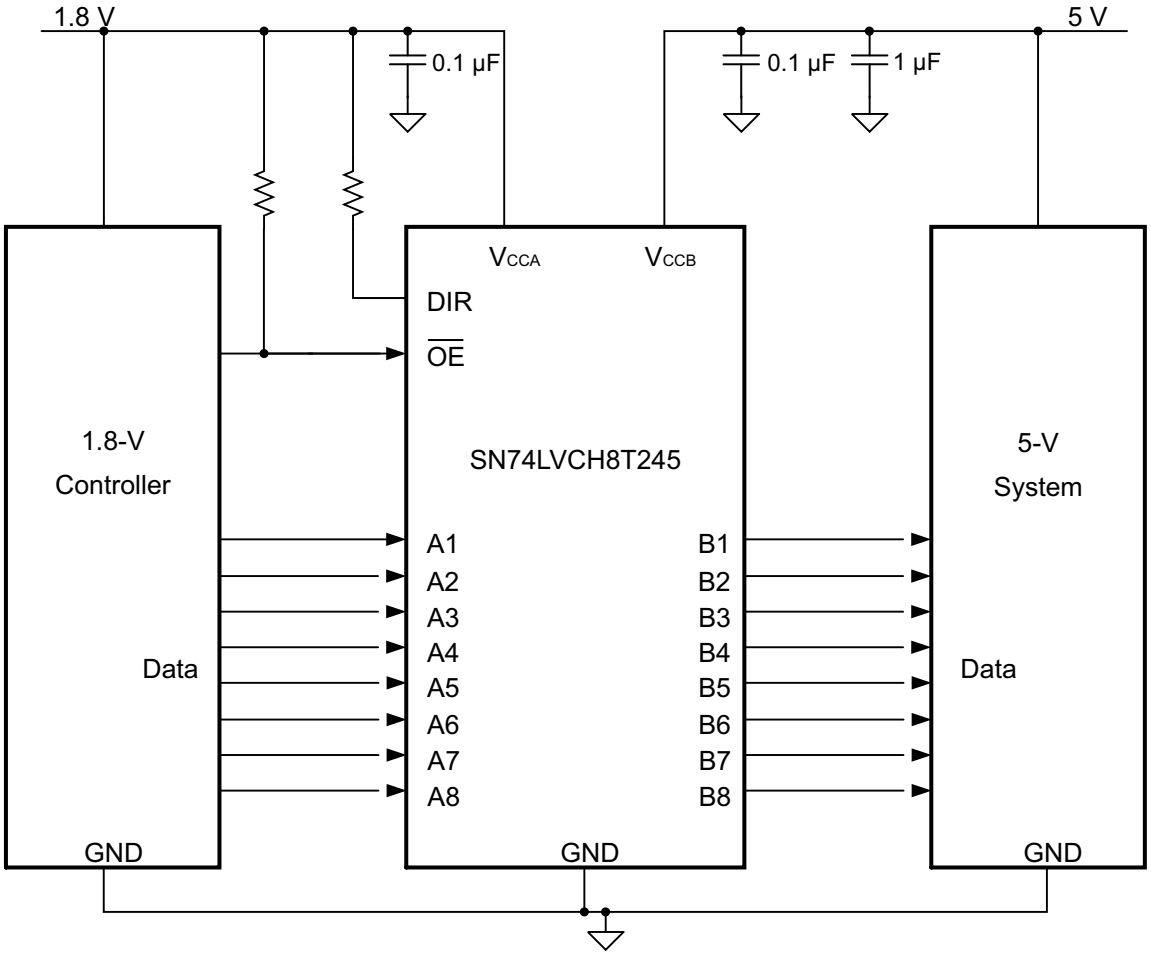

Figure 9-1. Typical Application Circuit

9.2.1 Design Requirements

For this design example, use the parameters listed in Table 9-1.

Table 9-1. Design Parameters

PARAMETERS	VALUES
Input voltage	1.65 V to 5.5 V
Output voltage	1.65 V to 5.5 V

9.2.2 Detailed Design Procedure

To begin the design process, determine the following:

- Input voltage range
  - Use the supply voltage of the device that is driving the SN74LVCH8T245 to determine the input voltage range. For a valid logic high, the value must exceed the V_{IH} of the input port. For a valid logic low, the value must be less than the V_{IL} of the input port.
- Output voltage range
  - Use the supply voltage of the device that the SN74LVCH8T245 is driving to determine the output voltage range.

9.2.2.1 Enable Times

Calculate the enable times for the SN74LVCH8T245 using Equation 1, Equation 2, Equation 3, and Equation 4:

$$t_{PZH}\text{ (DIR to A)} = t_{PLZ}\text{ (DIR to B)} + t_{PLH}\text{ (B to A)} \quad (1)$$

$$t_{PZL}\text{ (DIR to A)} = t_{PHZ}\text{ (DIR to B)} + t_{PHL}\text{ (B to A)} \quad (2)$$

$$t_{PZH}\text{ (DIR to B)} = t_{PLZ}\text{ (DIR to A)} + t_{PLH}\text{ (A to B)} \quad (3)$$

$$t_{PZL}\text{ (DIR to B)} = t_{PHZ}\text{ (DIR to A)} + t_{PHL}\text{ (A to B)} \quad (4)$$

In a bidirectional application, these enable times provide the maximum delay from the time the DIR bit is switched until an output is expected. For example, if the device initially is transmitting from A to B, then the DIR bit is switched; the B port of the device must be disabled before presenting it with an input. After the B port has been disabled, an input signal applied to it appears on the corresponding A port after the specified propagation delay.

9.2.3 Application Curve

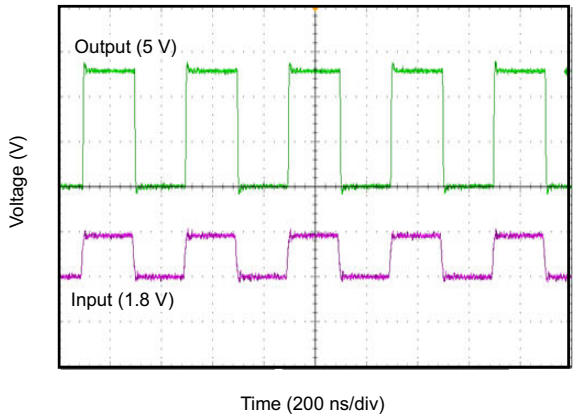

Figure 9-2. Translation Up (1.8 V to 5 V) at 2.5 MHz

Copyright © 2022 Texas Instruments Incorporated

10 Power Supply Recommendations

The output-enable ($\overline{OE}$) input circuit is designed so that it is supplied by V_{CCA} and when the $\overline{OE}$ input is high, all outputs are placed in the high-impedance state. To ensure the high-impedance state of the outputs during power up or power down, the $\overline{OE}$ input pin must be tied to V_{CCA} through a pullup resistor and must not be enabled until V_{CCA} and V_{CCB} are fully ramped and stable. The minimum value of the pullup resistor to V_{CCA} is determined by the current-sinking capability of the driver.

V_{CCA} or V_{CCB} can be powered up first. If the SN74LVCH8T245 is powered up in a permanently enabled state (for example $\overline{OE}$ is always kept low), pullup resistors are recommended at the input. This ensures proper, glitch-free, power-up. For more information, see *Designing with SN4LVCXT245 and SN74LVCHXT245 Family of Direction Controlled Voltage Translators/Level-Shifters*. In addition, the $\overline{OE}$ pin may be shorted to GND if the application does not require use of the high-impedance state at any time.

Copyright © 2022 Texas Instruments Incorporated

11 Layout

11.1 Layout Guidelines

To ensure reliability of the device, TI recommends the following common printed-circuit board layout guidelines.

- Bypass capacitors should be used on power supplies.
- Short trace lengths should be used to avoid excessive loading.
- Placing pads on the signal paths for loading capacitors or pullup resistors helps adjust rise and fall times of signals depending on the system requirements.

11.2 Layout Example

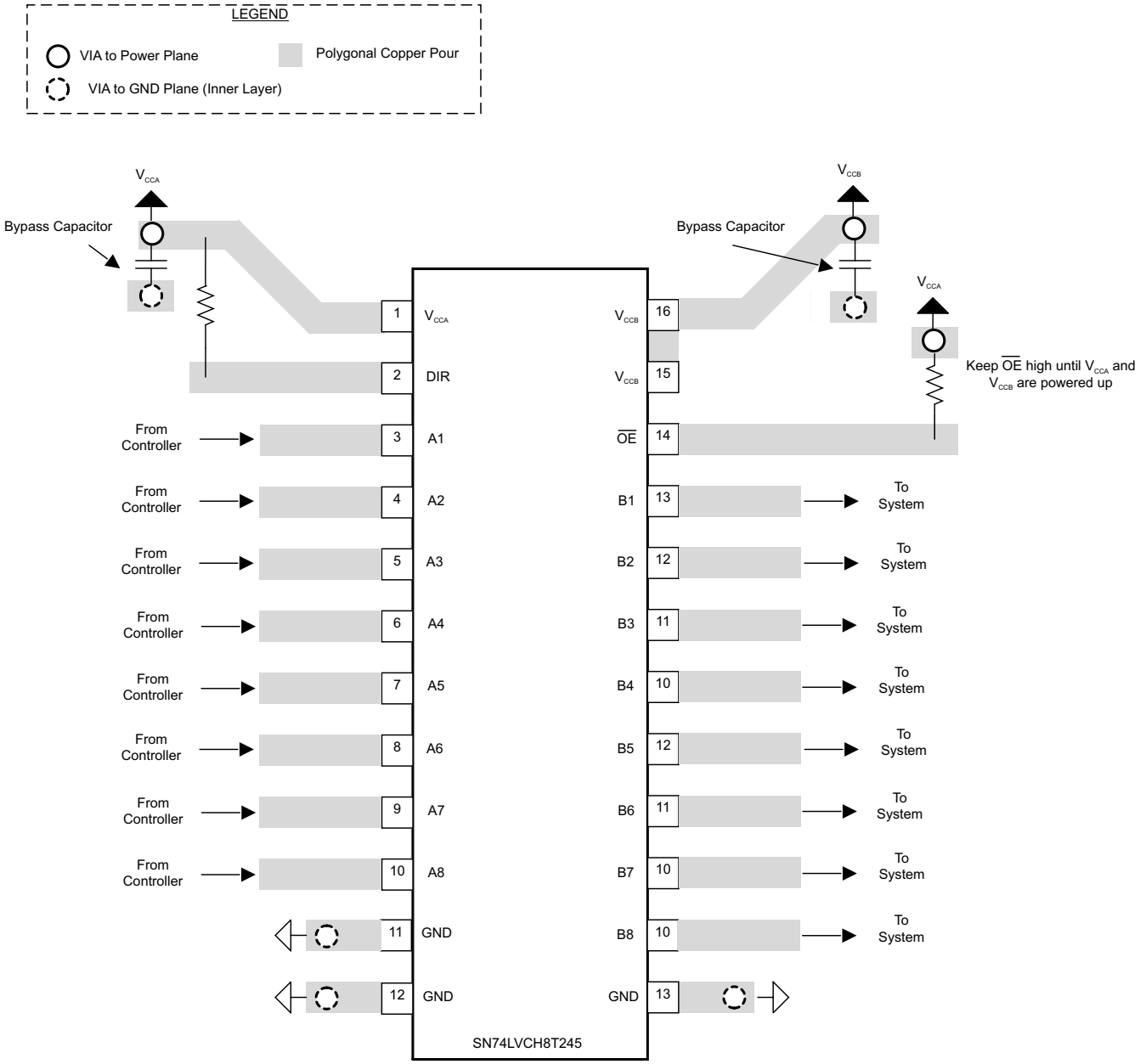

Figure 11-1. SN74LVCH8T245 Layout

Copyright © 2022 Texas Instruments Incorporated

12 Device and Documentation Support

12.1 Documentation Support

12.1.1 Related Documentation

For related documentation, see the following:

- Texas Instruments, *Designing with SN74LVCXT245 and SN74LVCHXT245 Family of Direction Controlled Voltage Translators/Level-Shifters*
- Texas Instruments, *Bus-Hold Circuit*
- Texas Instruments, *AVC Logic Family Technology and Applications*
- Texas Instruments, *CMOS Power Consumption and Cpd Calculation*

12.2 Receiving Notification of Documentation Updates

To receive notification of documentation updates, navigate to the device product folder on ti.com. Click on *Subscribe to updates* to register and receive a weekly digest of any product information that has changed. For change details, review the revision history included in any revised document.

12.3 Support Resources

TI E2E™ support forums are an engineer's go-to source for fast, verified answers and design help — straight from the experts. Search existing answers or ask your own question to get the quick design help you need.

Linked content is provided "AS IS" by the respective contributors. They do not constitute TI specifications and do not necessarily reflect TI's views; see TI's Terms of Use.

12.4 Trademarks

TI E2E™ is a trademark of Texas Instruments.
All trademarks are the property of their respective owners.

12.5 Electrostatic Discharge Caution

This integrated circuit can be damaged by ESD. Texas Instruments recommends that all integrated circuits be handled with appropriate precautions. Failure to observe proper handling and installation procedures can cause damage.

ESD damage can range from subtle performance degradation to complete device failure. Precision integrated circuits may be more susceptible to damage because very small parametric changes could cause the device not to meet its published specifications.

12.6 Glossary

TI Glossary This glossary lists and explains terms, acronyms, and definitions.

13 Mechanical, Packaging, and Orderable Information

The following pages include mechanical, packaging, and orderable information. This information is the most current data available for the designated devices. This data is subject to change without notice and revision of this document. For browser-based versions of this data sheet, refer to the left-hand navigation.

PACKAGING INFORMATION

Orderable part number	Status (1)	Material type (2)	Package | Pins	Package qty | Carrier	RoHS (3)	Lead finish/ Ball material (4)	MSL rating/ Peak reflow (5)	Op temp (°C)	Part marking (6)
74LVCH8T245DGVRG4	Active	Production	TVSOP (DGV) | 24	2000 | LARGE T&R	Yes	NIPDAU	Level-1-260C-UNLIM	-40 to 85	NJ245
74LVCH8T245DGVRG4.B	Active	Production	TVSOP (DGV) | 24	2000 | LARGE T&R	Yes	NIPDAU	Level-1-260C-UNLIM	-40 to 85	NJ245
74LVCH8T245RHLRG4	Active	Production	VQFN (RHL) | 24	1000 | LARGE T&R	Yes	NIPDAU	Level-2-260C-1 YEAR	-40 to 85	NJ245
74LVCH8T245RHLRG4.B	Active	Production	VQFN (RHL) | 24	1000 | LARGE T&R	Yes	NIPDAU	Level-2-260C-1 YEAR	-40 to 85	NJ245
SN74LVCH8T245DBR	Active	Production	SSOP (DB) | 24	2000 | LARGE T&R	Yes	NIPDAU	Level-1-260C-UNLIM	-40 to 85	NJ245
SN74LVCH8T245DBR.B	Active	Production	SSOP (DB) | 24	2000 | LARGE T&R	Yes	NIPDAU	Level-1-260C-UNLIM	-40 to 85	NJ245
SN74LVCH8T245DBRG4	Active	Production	SSOP (DB) | 24	2000 | LARGE T&R	Yes	NIPDAU	Level-1-260C-UNLIM	-40 to 85	NJ245
SN74LVCH8T245DBRG4.B	Active	Production	SSOP (DB) | 24	2000 | LARGE T&R	Yes	NIPDAU	Level-1-260C-UNLIM	-40 to 85	NJ245
SN74LVCH8T245DGVR	Active	Production	TVSOP (DGV) | 24	2000 | LARGE T&R	Yes	NIPDAU	Level-1-260C-UNLIM	-40 to 85	NJ245
SN74LVCH8T245DGVR.B	Active	Production	TVSOP (DGV) | 24	2000 | LARGE T&R	Yes	NIPDAU	Level-1-260C-UNLIM	-40 to 85	NJ245
SN74LVCH8T245PW	Active	Production	TSSOP (PW) | 24	60 | TUBE	Yes	NIPDAU	Level-1-260C-UNLIM	-40 to 85	NJ245
SN74LVCH8T245PW.B	Active	Production	TSSOP (PW) | 24	60 | TUBE	Yes	NIPDAU	Level-1-260C-UNLIM	-40 to 85	NJ245
SN74LVCH8T245PWE4	Active	Production	TSSOP (PW) | 24	60 | TUBE	Yes	NIPDAU	Level-1-260C-UNLIM	-40 to 85	NJ245
SN74LVCH8T245PWR	Active	Production	TSSOP (PW) | 24	2000 | LARGE T&R	Yes	NIPDAU	Level-1-260C-UNLIM	-40 to 85	NJ245
SN74LVCH8T245PWR.A	Active	Production	TSSOP (PW) | 24	2000 | LARGE T&R	Yes	NIPDAU	Level-1-260C-UNLIM	-40 to 85	NJ245
SN74LVCH8T245PWRG4	Active	Production	TSSOP (PW) | 24	2000 | LARGE T&R	Yes	NIPDAU	Level-1-260C-UNLIM	-40 to 85	NJ245
SN74LVCH8T245PWRG4.A	Active	Production	TSSOP (PW) | 24	2000 | LARGE T&R	Yes	NIPDAU	Level-1-260C-UNLIM	-40 to 85	NJ245
SN74LVCH8T245RHLR	Active	Production	VQFN (RHL) | 24	1000 | LARGE T&R	Yes	NIPDAU	Level-2-260C-1 YEAR	-40 to 85	NJ245
SN74LVCH8T245RHLR.B	Active	Production	VQFN (RHL) | 24	1000 | LARGE T&R	Yes	NIPDAU	Level-2-260C-1 YEAR	-40 to 85	NJ245

(1) **Status:** For more details on status, see our product life cycle.

(2) **Material type:** When designated, preproduction parts are prototypes/experimental devices, and are not yet approved or released for full production. Testing and final process, including without limitation quality assurance, reliability performance testing, and/or process qualification, may not yet be complete, and this item is subject to further changes or possible discontinuation. If available for ordering, purchases will be subject to an additional waiver at checkout, and are intended for early internal evaluation purposes only. These items are sold without warranties of any kind.

(3) **RoHS values:** Yes, No, RoHS Exempt. See the TI RoHS Statement for additional information and value definition.

(4) **Lead finish/Ball material:** Parts may have multiple material finish options. Finish options are separated by a vertical ruled line. Lead finish/Ball material values may wrap to two lines if the finish value exceeds the maximum column width.

(5) **MSL rating/Peak reflow:** The moisture sensitivity level ratings and peak solder (reflow) temperatures. In the event that a part has multiple moisture sensitivity ratings, only the lowest level per JEDEC standards is shown. Refer to the shipping label for the actual reflow temperature that will be used to mount the part to the printed circuit board.

(6) **Part marking:** There may be an additional marking, which relates to the logo, the lot trace code information, or the environmental category of the part.

Multiple part markings will be inside parentheses. Only one part marking contained in parentheses and separated by a "~" will appear on a part. If a line is indented then it is a continuation of the previous line and the two combined represent the entire part marking for that device.

Important Information and Disclaimer: The information provided on this page represents TI's knowledge and belief as of the date that it is provided. TI bases its knowledge and belief on information provided by third parties, and makes no representation or warranty as to the accuracy of such information. Efforts are underway to better integrate information from third parties. TI has taken and continues to take reasonable steps to provide representative and accurate information but may not have conducted destructive testing or chemical analysis on incoming materials and chemicals. TI and TI suppliers consider certain information to be proprietary, and thus CAS numbers and other limited information may not be available for release.

In no event shall TI's liability arising out of such information exceed the total purchase price of the TI part(s) at issue in this document sold by TI to Customer on an annual basis.

TAPE AND REEL INFORMATION

REEL DIMENSIONS

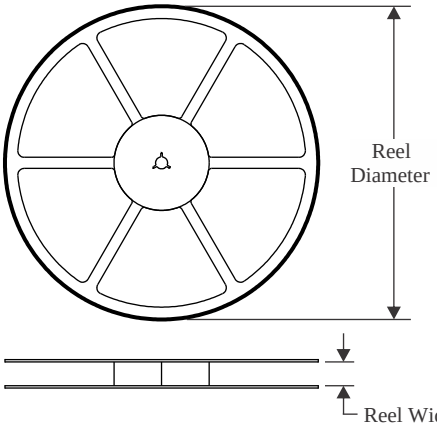

TAPE DIMENSIONS

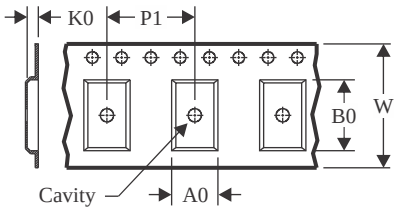

A0	Dimension designed to accommodate the component width
B0	Dimension designed to accommodate the component length
K0	Dimension designed to accommodate the component thickness
W	Overall width of the carrier tape
P1	Pitch between successive cavity centers

QUADRANT ASSIGNMENTS FOR PIN 1 ORIENTATION IN TAPE

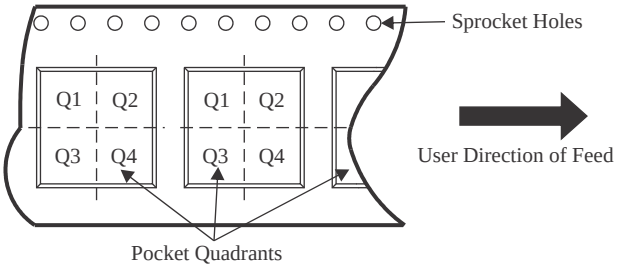

*All dimensions are nominal

Device	Package Type	Package Drawing	Pins	SPQ	Reel Diameter (mm)	Reel Width W1 (mm)	A0 (mm)	B0 (mm)	K0 (mm)	P1 (mm)	W (mm)	Pin1 Quadrant
74LVCH8T245DGVRG4	TVSOP	DGV	24	2000	330.0	12.4	6.9	5.6	1.6	8.0	12.0	Q1
74LVCH8T245RHLRG4	VQFN	RHL	24	1000	180.0	12.4	3.8	5.8	1.2	8.0	12.0	Q1
SN74LVCH8T245DBR	SSOP	DB	24	2000	330.0	16.4	8.2	8.8	2.5	12.0	16.0	Q1
SN74LVCH8T245DBRG4	SSOP	DB	24	2000	330.0	16.4	8.2	8.8	2.5	12.0	16.0	Q1
SN74LVCH8T245DGVR	TVSOP	DGV	24	2000	330.0	12.4	6.9	5.6	1.6	8.0	12.0	Q1
SN74LVCH8T245PWR	TSSOP	PW	24	2000	330.0	16.4	6.95	8.3	1.6	8.0	16.0	Q1
SN74LVCH8T245PWRG4	TSSOP	PW	24	2000	330.0	16.4	6.95	8.3	1.6	8.0	16.0	Q1
SN74LVCH8T245PWRG4	TSSOP	PW	24	2000	330.0	16.4	6.95	8.3	1.6	8.0	16.0	Q1
SN74LVCH8T245RHLR	VQFN	RHL	24	1000	180.0	12.4	3.8	5.8	1.2	8.0	12.0	Q1

TAPE AND REEL BOX DIMENSIONS

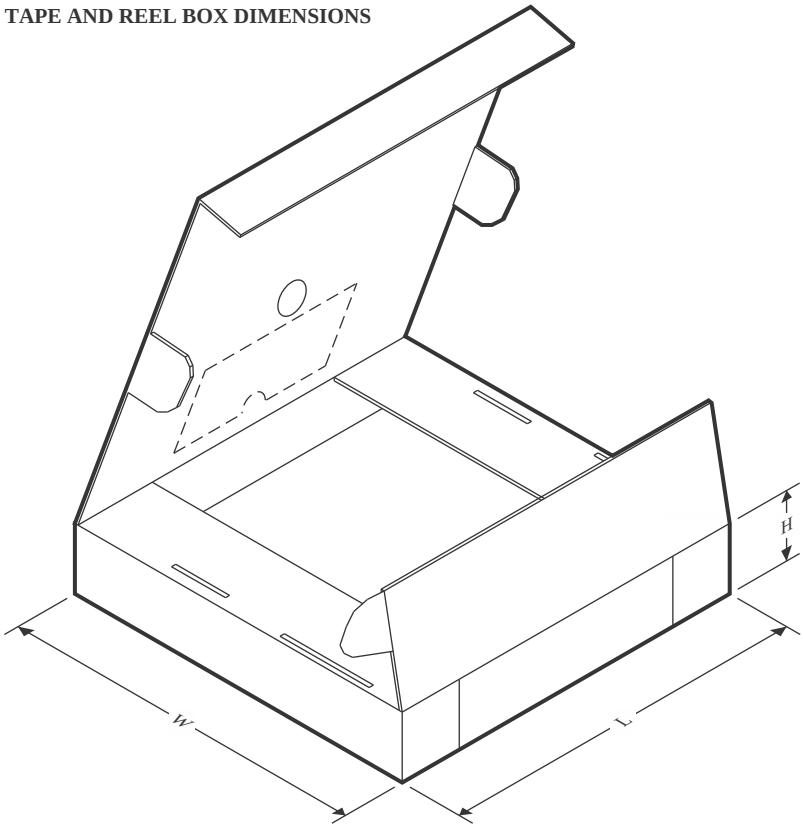

*All dimensions are nominal

Device	Package Type	Package Drawing	Pins	SPQ	Length (mm)	Width (mm)	Height (mm)
74LVCH8T245DGVRG4	TVSOP	DGV	24	2000	356.0	356.0	35.0
74LVCH8T245RHLRG4	VQFN	RHL	24	1000	210.0	185.0	35.0
SN74LVCH8T245DBR	SSOP	DB	24	2000	356.0	356.0	35.0
SN74LVCH8T245DBRG4	SSOP	DB	24	2000	356.0	356.0	35.0
SN74LVCH8T245DGVR	TVSOP	DGV	24	2000	356.0	356.0	35.0
SN74LVCH8T245PWR	TSSOP	PW	24	2000	356.0	356.0	35.0
SN74LVCH8T245PWRG4	TSSOP	PW	24	2000	356.0	356.0	35.0
SN74LVCH8T245PWRG4	TSSOP	PW	24	2000	356.0	356.0	35.0
SN74LVCH8T245RHLR	VQFN	RHL	24	1000	213.0	191.0	35.0

TUBE

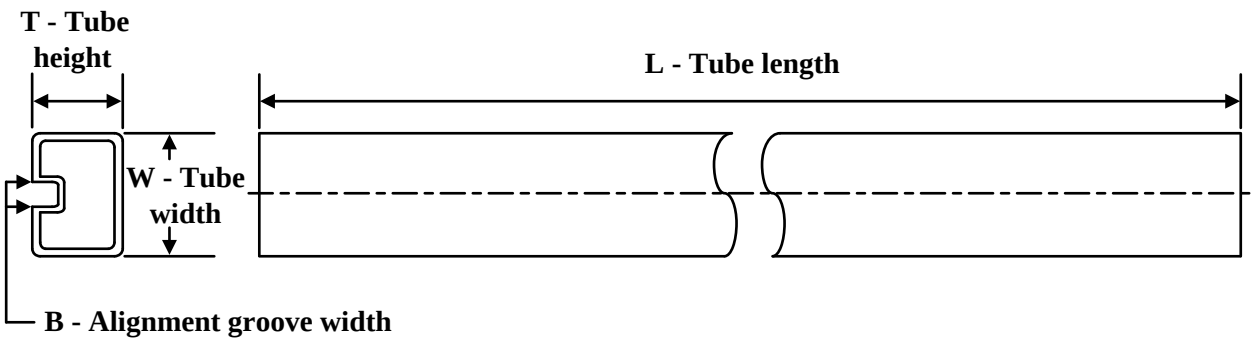

*All dimensions are nominal

Device	Package Name	Package Type	Pins	SPQ	L (mm)	W (mm)	T (µm)	B (mm)
SN74LVCH8T245PW	PW	TSSOP	24	60	530	10.2	3600	3.5
SN74LVCH8T245PW.B	PW	TSSOP	24	60	530	10.2	3600	3.5
SN74LVCH8T245PWE4	PW	TSSOP	24	60	530	10.2	3600	3.5

DB (R-PDSO-G)** **PLASTIC SMALL-OUTLINE**

28 PINS SHOWN

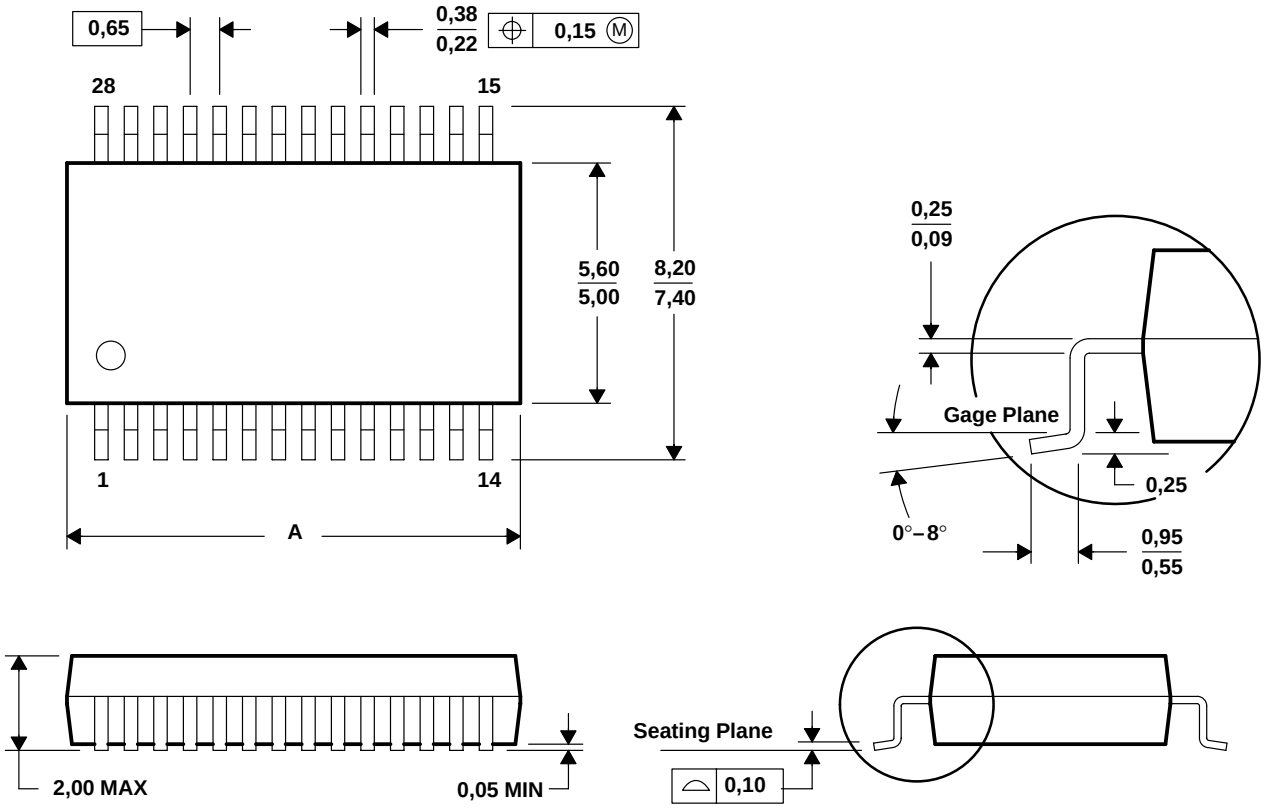

DIM \ PINS **	14	16	20	24	28	30	38
A MAX	6,50	6,50	7,50	8,50	10,50	10,50	12,90
A MIN	5,90	5,90	6,90	7,90	9,90	9,90	12,30

4040065 /E 12/01

NOTES: A. All linear dimensions are in millimeters.
B. This drawing is subject to change without notice.
C. Body dimensions do not include mold flash or protrusion not to exceed 0,15.
D. Falls within JEDEC MO-150

PLASTIC QUAD FLATPACK- NO LEAD

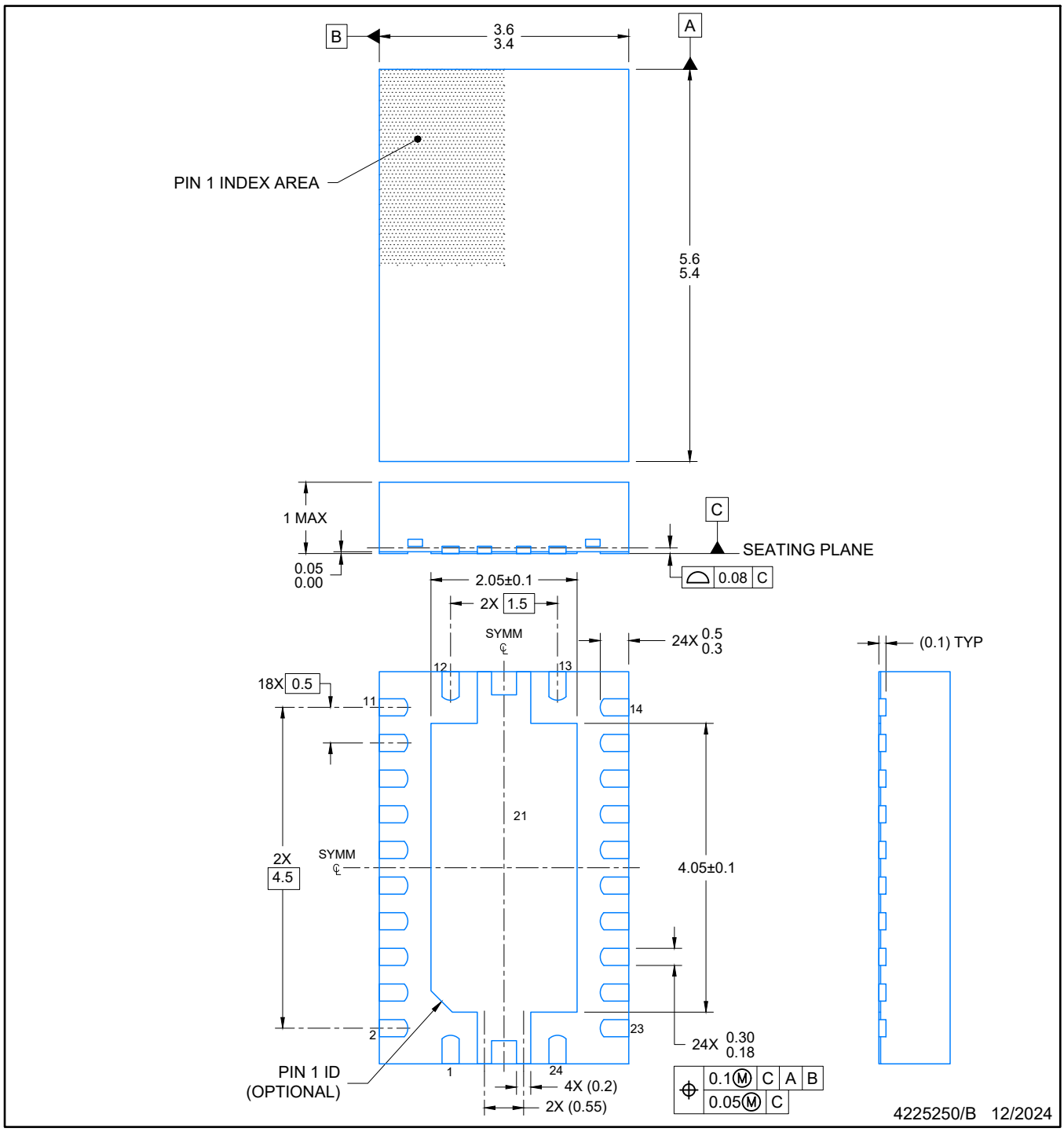

NOTES:

1. All linear dimensions are in millimeters. Any dimensions in parenthesis are for reference only. Dimensioning and tolerancing per ASME Y14.5M.
2. This drawing is subject to change without notice.
3. The package thermal pad must be soldered to the printed circuit board for optimal thermal and mechanical performance.

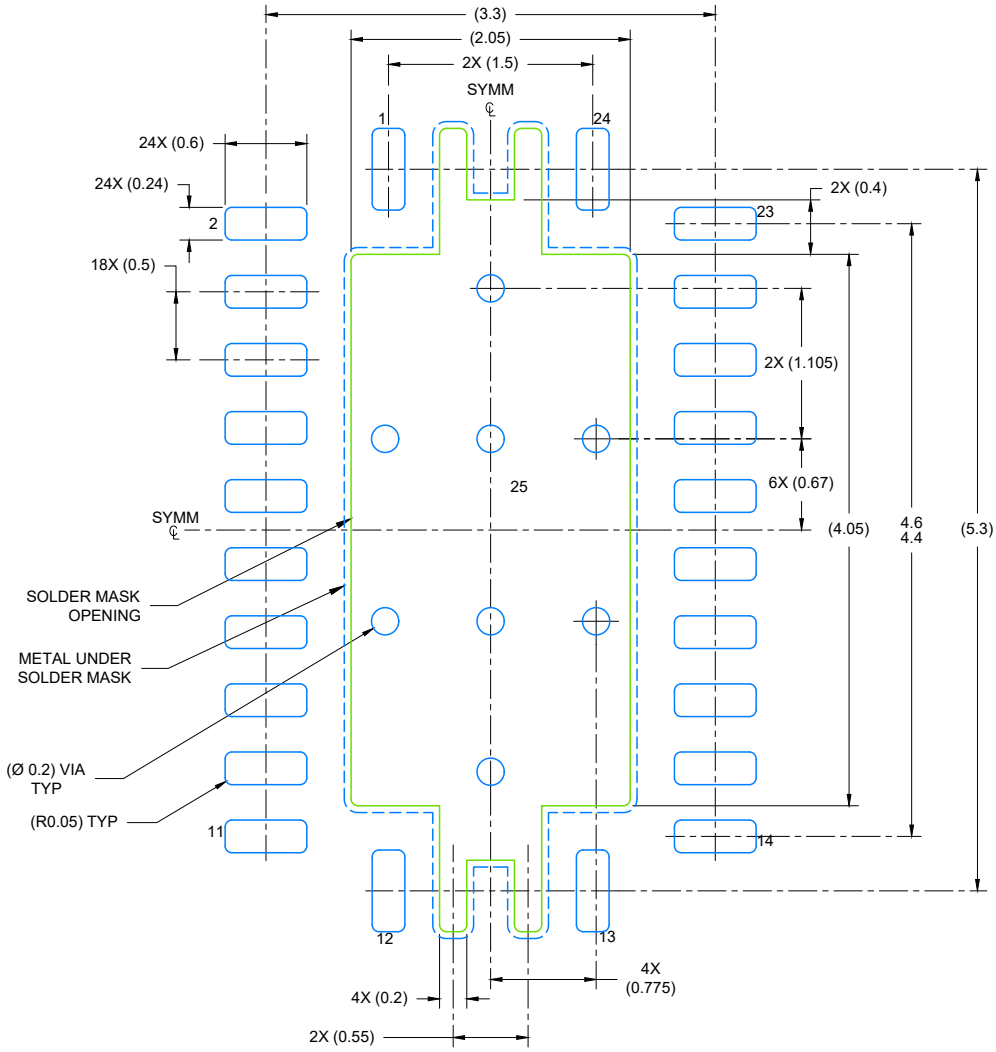

LAND PATTERN EXAMPLE
EXPOSED METAL SHOWN
SCALE: 18X

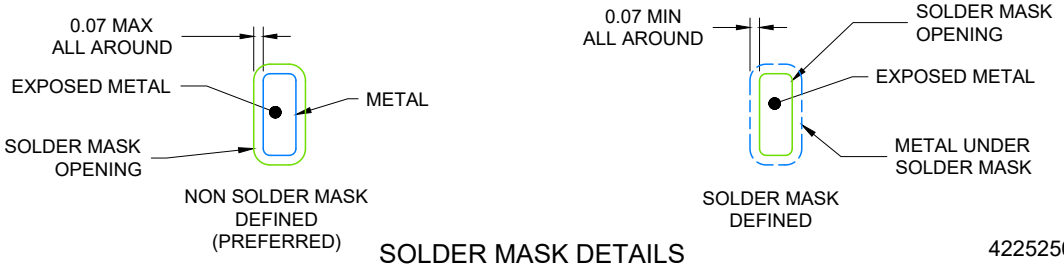

SOLDER MASK DETAILS

4225250/B 12/2024

NOTES: (continued)

4. This package is designed to be soldered to a thermal pad on the board. For more information, see Texas Instruments literature number SLUA271 (www.ti.com/lit/slua271).
5. Vias are optional depending on application, refer to device data sheet. If any vias are implemented, refer to their locations shown on this view. It is recommended that vias under paste be filled, plugged or tented.

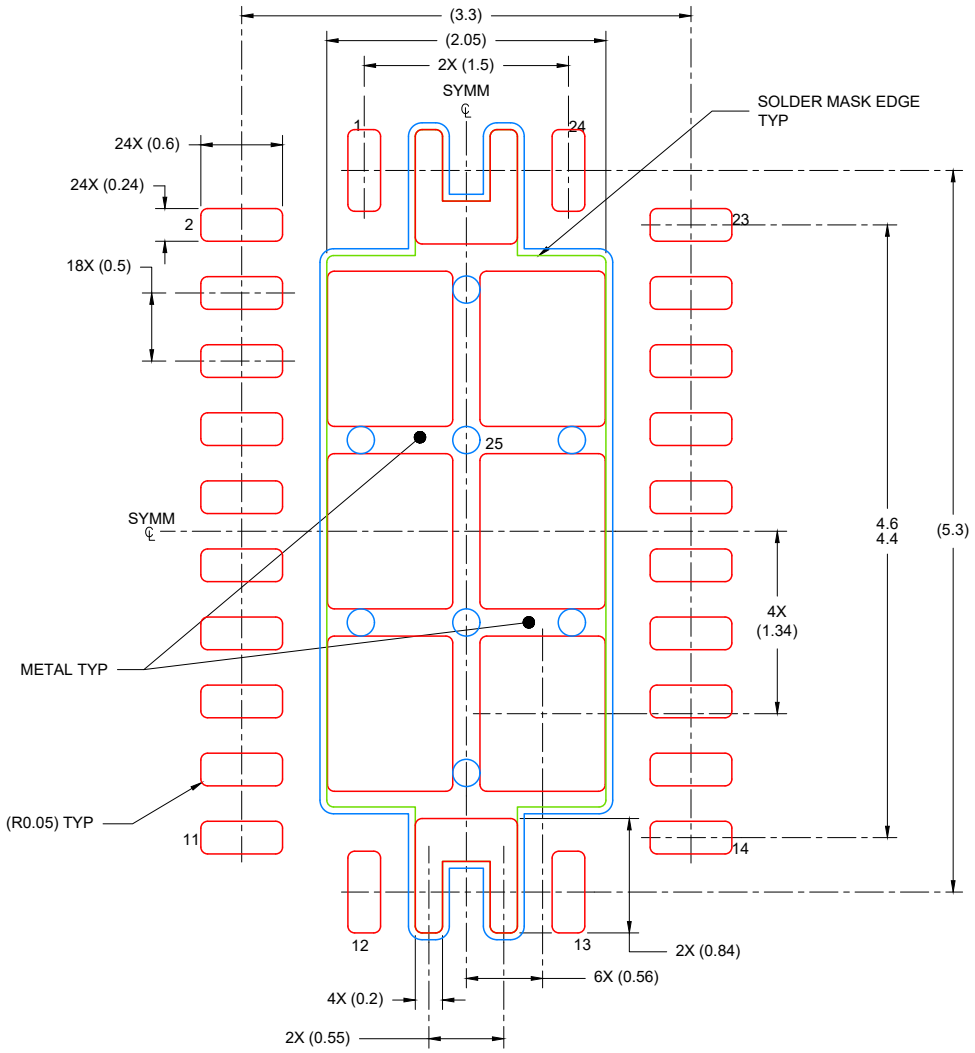

SOLDER PASTE EXAMPLE
BASED ON 0.125 mm THICK STENCIL

EXPOSED PAD
80% PRINTED COVERAGE BY AREA
SCALE: 18X

4225250/B 12/2024

NOTES: (continued)

6. Laser cutting apertures with trapezoidal walls and rounded corners may offer better paste release. IPC-7525 may have alternate design recommendations.

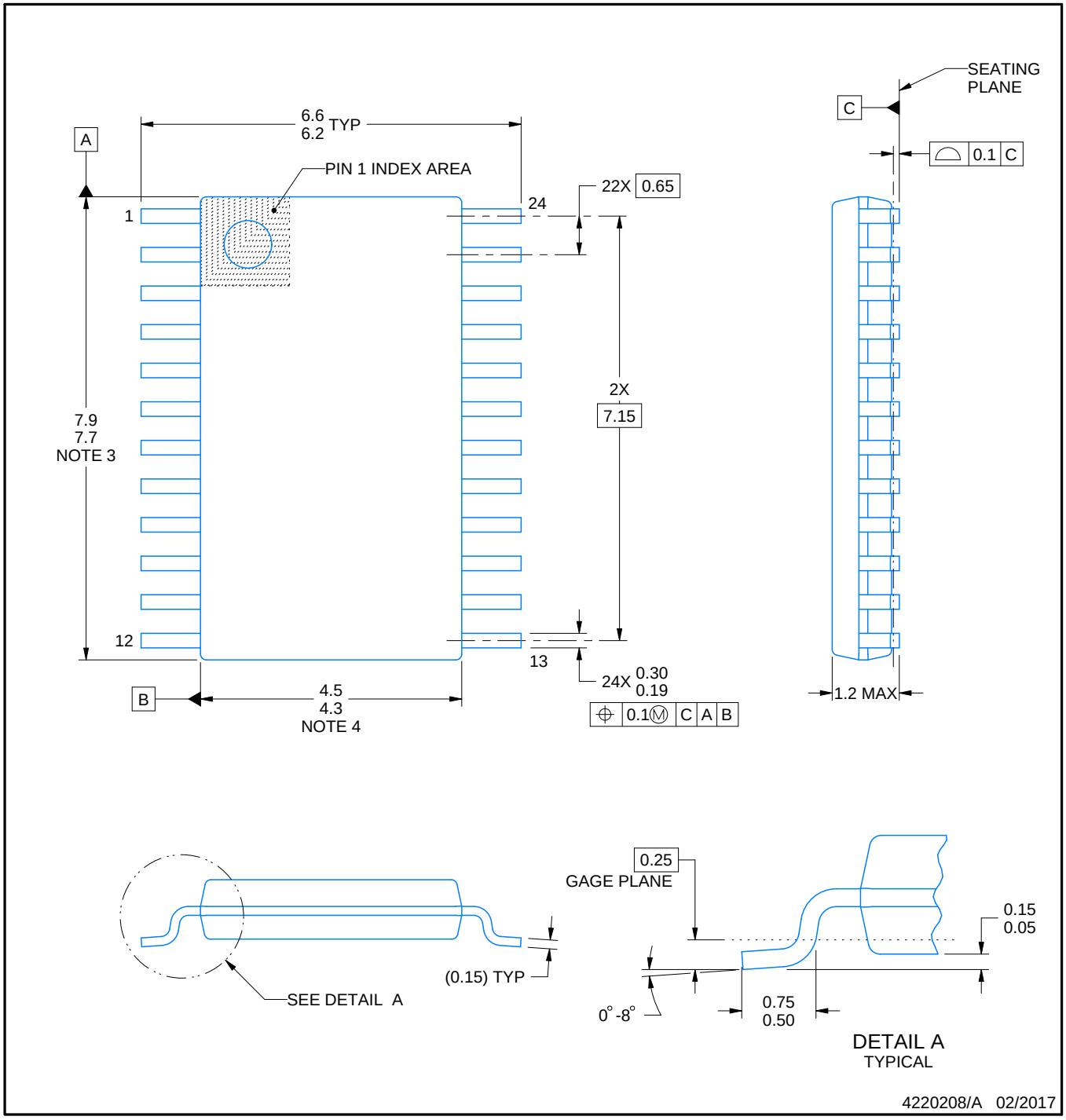

NOTES:

1. All linear dimensions are in millimeters. Any dimensions in parenthesis are for reference only. Dimensioning and tolerancing per ASME Y14.5M.
2. This drawing is subject to change without notice.
3. This dimension does not include mold flash, protrusions, or gate burrs. Mold flash, protrusions, or gate burrs shall not exceed 0.15 mm per side.
4. This dimension does not include interlead flash. Interlead flash shall not exceed 0.25 mm per side.
5. Reference JEDEC registration MO-153.

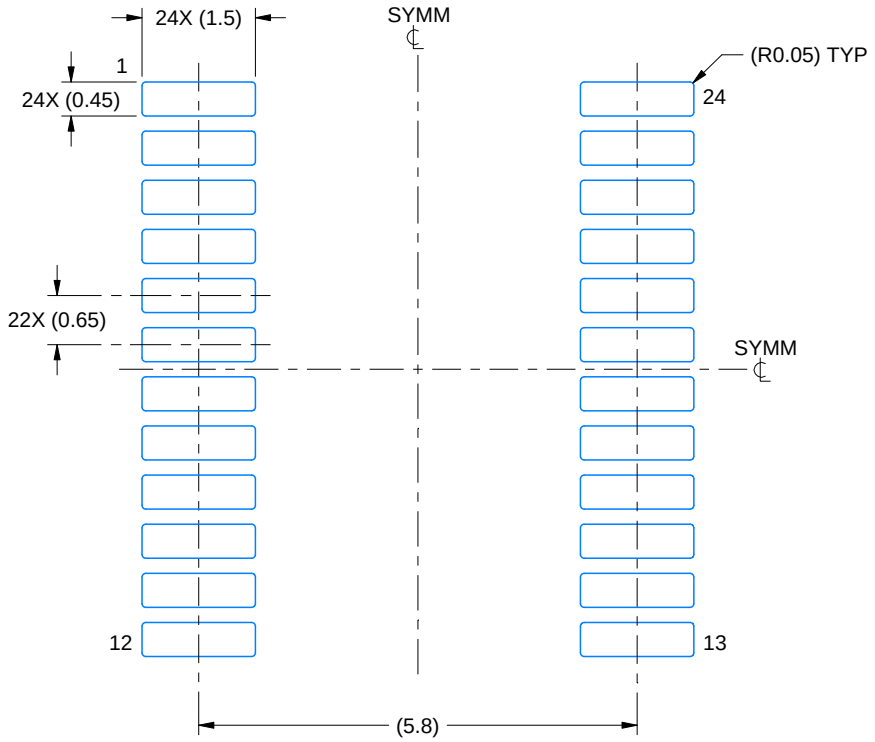

LAND PATTERN EXAMPLE
EXPOSED METAL SHOWN
SCALE: 10X

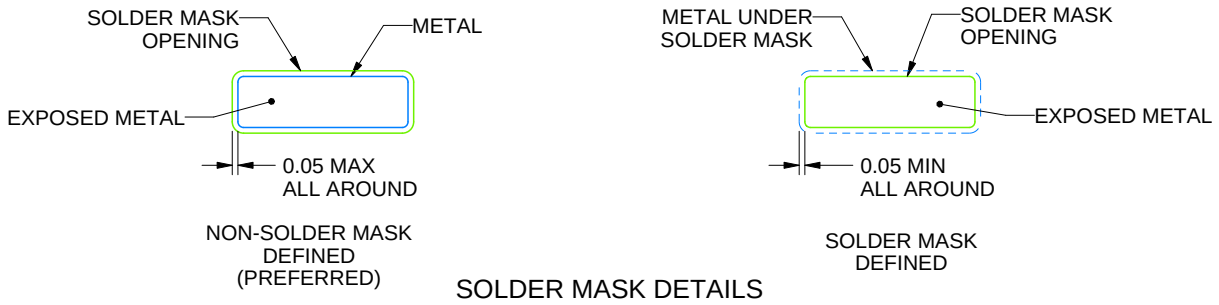

SOLDER MASK DETAILS

4220208/A 02/2017

NOTES: (continued)

6. Publication IPC-7351 may have alternate designs.
7. Solder mask tolerances between and around signal pads can vary based on board fabrication site.

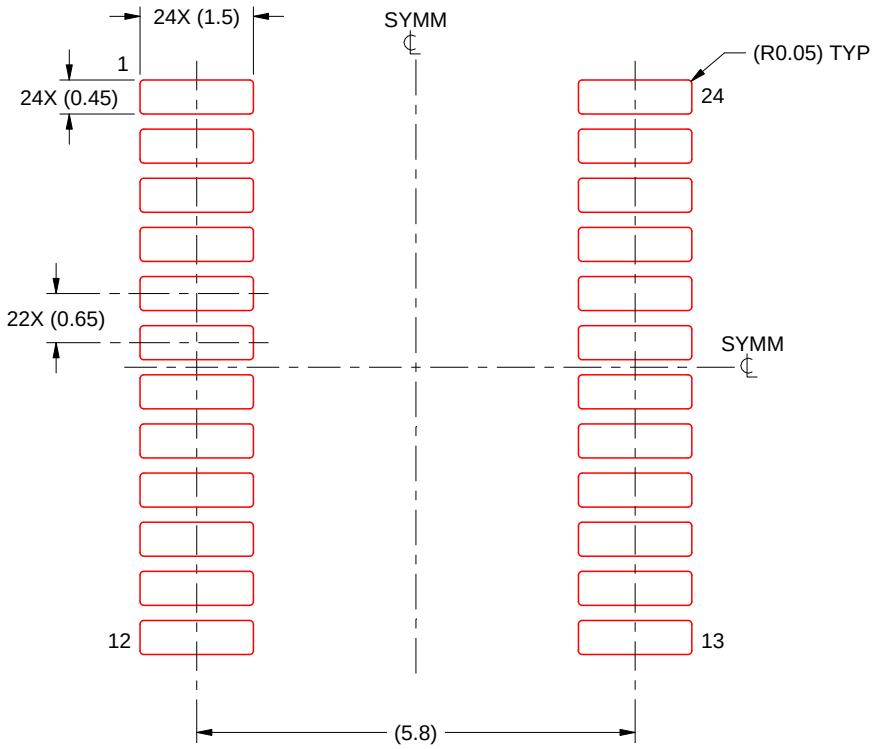

SOLDER PASTE EXAMPLE
BASED ON 0.125 mm THICK STENCIL
SCALE: 10X

4220208/A 02/2017

NOTES: (continued)

8. Laser cutting apertures with trapezoidal walls and rounded corners may offer better paste release. IPC-7525 may have alternate design recommendations.
9. Board assembly site may have different recommendations for stencil design.

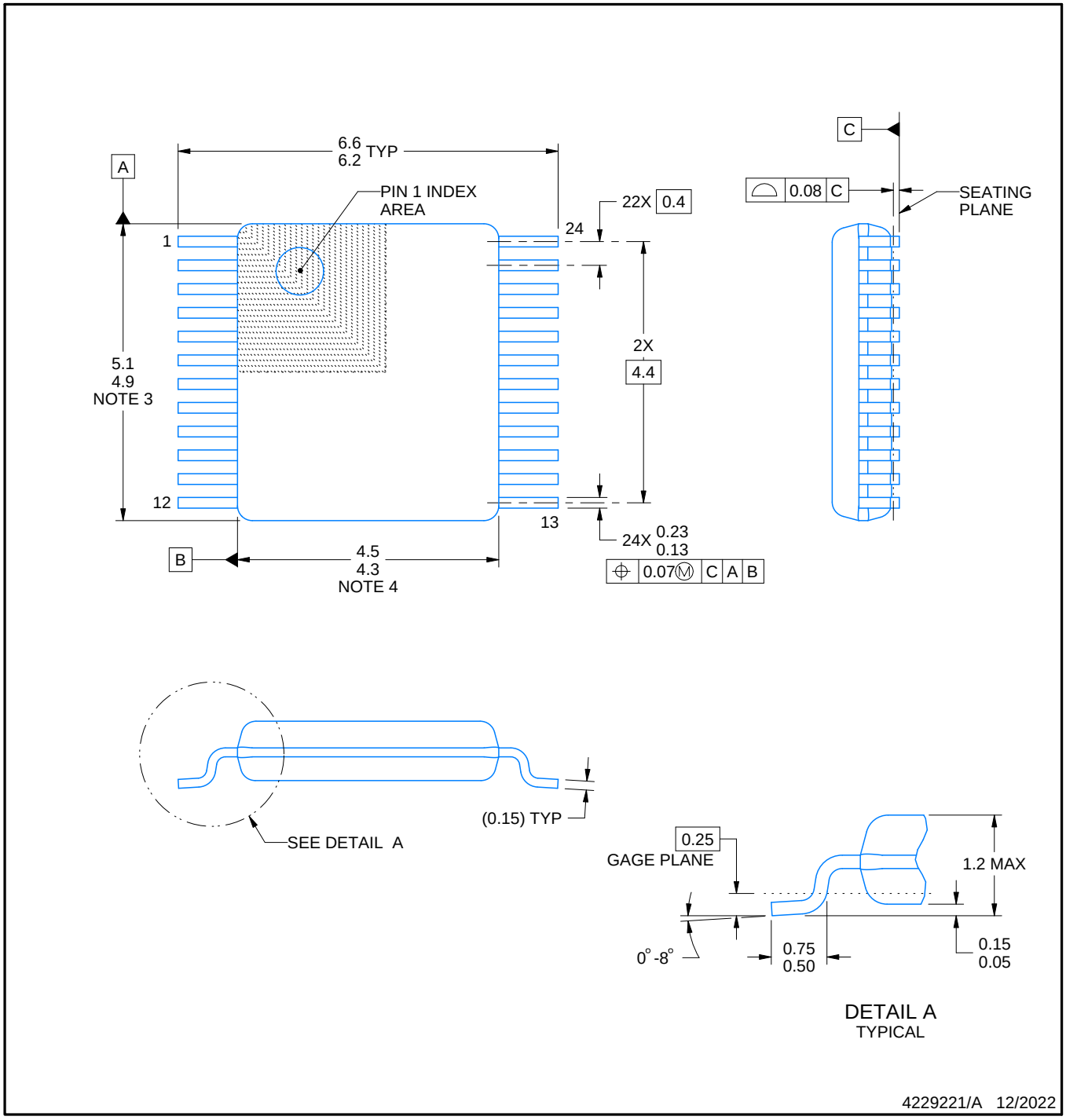

NOTES:

1. All linear dimensions are in millimeters. Any dimensions in parenthesis are for reference only. Dimensioning and tolerancing per ASME Y14.5M.
2. This drawing is subject to change without notice.
3. This dimension does not include mold flash, protrusions, or gate burrs. Mold flash, protrusions, or gate burrs shall not exceed 0.15 mm per side.
4. This dimension does not include interlead flash. Interlead flash shall not exceed 0.25 mm per side.
5. Reference JEDEC registration MO-153.

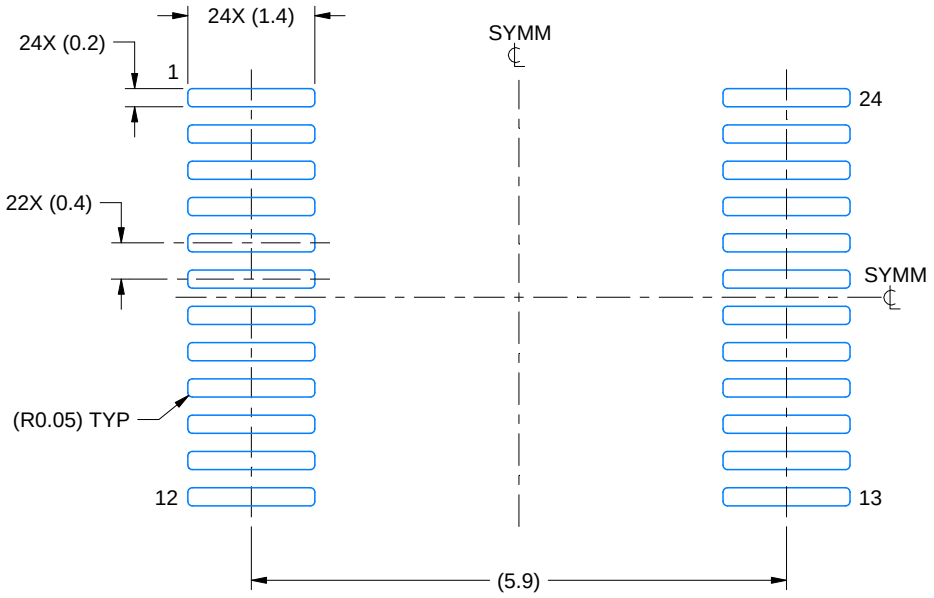

LAND PATTERN EXAMPLE
EXPOSED METAL SHOWN
SCALE: 12X

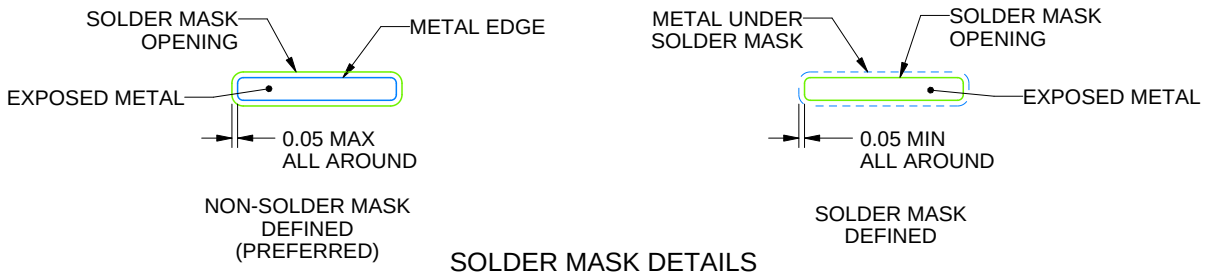

SOLDER MASK DETAILS

4229221/A 12/2022

NOTES: (continued)

6. Publication IPC-7351 may have alternate designs.
7. Solder mask tolerances between and around signal pads can vary based on board fabrication site.

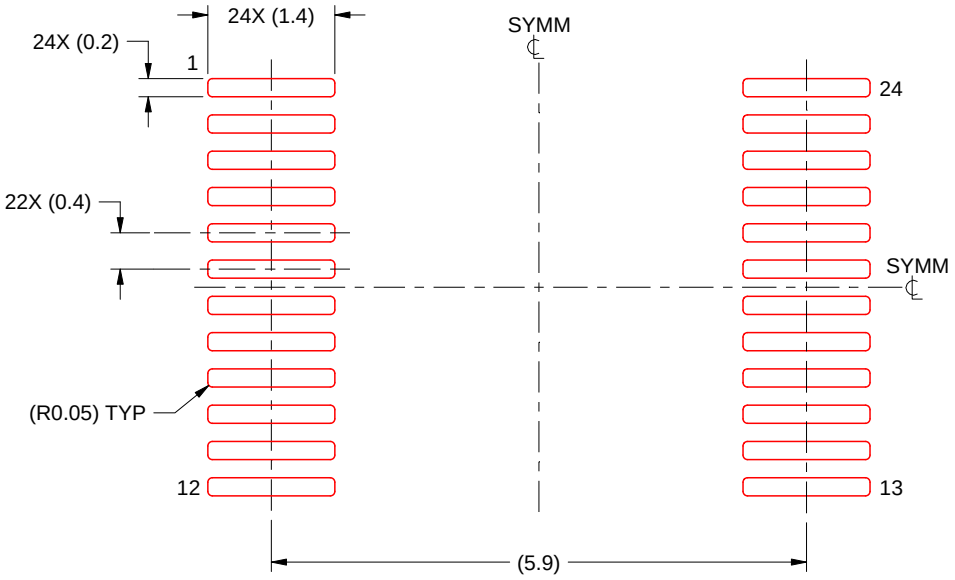

SOLDER PASTE EXAMPLE
BASED ON 0.125 mm THICK STENCIL
SCALE: 12X

4229221/A 12/2022

NOTES: (continued)

8. Laser cutting apertures with trapezoidal walls and rounded corners may offer better paste release. IPC-7525 may have alternate design recommendations.
9. Board assembly site may have different recommendations for stencil design.

IMPORTANT NOTICE AND DISCLAIMER

TI PROVIDES TECHNICAL AND RELIABILITY DATA (INCLUDING DATA SHEETS), DESIGN RESOURCES (INCLUDING REFERENCE DESIGNS), APPLICATION OR OTHER DESIGN ADVICE, WEB TOOLS, SAFETY INFORMATION, AND OTHER RESOURCES “AS IS” AND WITH ALL FAULTS, AND DISCLAIMS ALL WARRANTIES, EXPRESS AND IMPLIED, INCLUDING WITHOUT LIMITATION ANY IMPLIED WARRANTIES OF MERCHANTABILITY, FITNESS FOR A PARTICULAR PURPOSE OR NON-INFRINGEMENT OF THIRD PARTY INTELLECTUAL PROPERTY RIGHTS.

These resources are intended for skilled developers designing with TI products. You are solely responsible for (1) selecting the appropriate TI products for your application, (2) designing, validating and testing your application, and (3) ensuring your application meets applicable standards, and any other safety, security, regulatory or other requirements.

These resources are subject to change without notice. TI grants you permission to use these resources only for development of an application that uses the TI products described in the resource. Other reproduction and display of these resources is prohibited. No license is granted to any other TI intellectual property right or to any third party intellectual property right. TI disclaims responsibility for, and you will fully indemnify TI and its representatives against, any claims, damages, costs, losses, and liabilities arising out of your use of these resources.

TI’s products are provided subject to TI’s Terms of Sale or other applicable terms available either on ti.com or provided in conjunction with such TI products. TI’s provision of these resources does not expand or otherwise alter TI’s applicable warranties or warranty disclaimers for TI products.

TI objects to and rejects any additional or different terms you may have proposed.

Mailing Address: Texas Instruments, Post Office Box 655303, Dallas, Texas 75265
Copyright © 2025, Texas Instruments Incorporated