LMZ31707 7-A Power Module with 2.95-V to 17-V Input and Current Sharing in QFN Package

1 Features

- Complete integrated power solution allows small footprint, low-profile design
- 10-mm × 10-mm × 4.3-mm package
  - Pin compatible with LMZ31710 and LMZ31704
- Efficiencies up to 95%
- Eco-mode™ / light load efficiency (LLE)
- Wide-output voltage adjust 0.6 V to 5.5 V, with 1% reference accuracy
- Supports parallel operation for higher current
- Optional split power rail allows input voltage down to 2.95 V
- Adjustable switching frequency (200 kHz to 1.2 MHz)
- Synchronizes to an external clock
- Provides 180° out-of-phase clock signal
- Adjustable slow start
- Output voltage sequencing / tracking
- Power good output
- Programmable undervoltage lockout (UVLO)
- Overcurrent and overtemperature protection
- Pre-Bias output start-up
- Operating temperature range: –40°C to +85°C
- Enhanced thermal performance: 13.3°C/W
- Meets EN55022 Class B emissions
  - Integrated shielded inductor
- Create a custom design using the LMZ31707 with the WEBENCH® Power Designer

2 Applications

- Broadband and communications infrastructure
- Automated test and medical equipment
- Compact PCI / PCI express / PXI express
- DSP and FPGA point-of-load applications

3 Description

The LMZ31707 SIMPLE SWITCHER® power module is an easy-to-use integrated power solution that combines a 7-A DC-DC converter with power MOSFETs, a shielded inductor, and passives into a low profile, QFN package. This total power solution allows as few as three external components and eliminates the loop compensation and magnetics part selection process.

The 10-mm × 10-mm × 4.3-mm QFN package is easy to solder onto a printed circuit board and allows a compact point-of-load design. Achieves greater than 95% efficiency and excellent power dissipation capability with a thermal impedance of 13.3°C/W. The LMZ31707 offers the flexibility and the feature-set of a discrete point-of-load design and is ideal for powering a wide range of ICs and systems. Advanced packaging technology affords a robust and reliable power solution compatible with standard QFN mounting and testing techniques.

Simplified Application

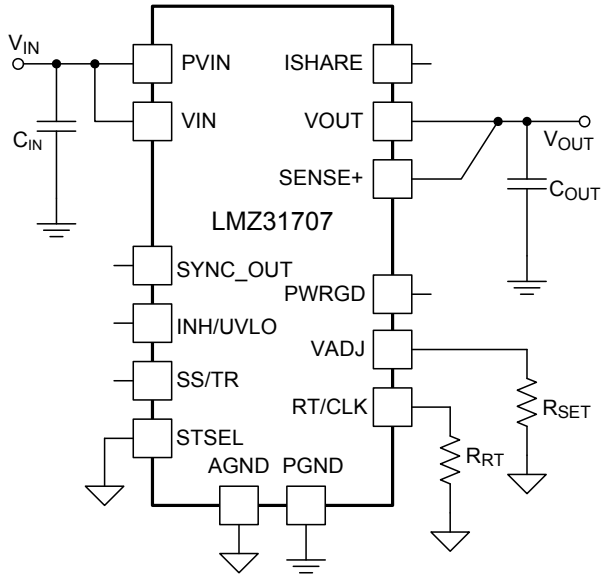

An IMPORTANT NOTICE at the end of this data sheet addresses availability, warranty, changes, use in safety-critical applications, intellectual property matters and other important disclaimers. PRODUCTION DATA.

4 Revision History

NOTE: Page numbers for previous revisions may differ from page numbers in the current version.

Changes from Revision D (March 2019) to Revision E	Page
• Added V_{OUT} Range values under different I_{OUT} conditions in Table 7	24

Changes from Revision C (April 2018) to Revision D	Page
• Added ESD Ratings information	3
• Corrected TBD values in Synchronization Frequency vs Output Voltage Table	24

Changes from Revision B (June 2017) to Revision C	Page
• Added WEBENCH® design links for the LMZ31707	1
• Increased the peak reflow temperature and maximum number of reflows to JEDEC specifications for improved manufacturability	3
• Added *Device Support* section	29
• Added *Mechanical, Packaging, and Orderable Information* section	30

Changes from Revision A (August 2013) to Revision B	Page
• Added peak reflow and maximum number of reflows information	3

Copyright © 2013–2020, Texas Instruments Incorporated

5 Specifications

5.1 Absolute Maximum Ratings[1]

over operating temperature range (unless otherwise noted)

		MIN	MAX	UNIT
Input Voltage	VIN, PVIN	–0.3	20	V
	INH/UVLO, PWRGD, RT/CLK, SENSE+	–0.3	6	V
	ILIM, VADJ, SS/TR, STSEL, SYNC_OUT, ISHARE, OCP_SEL	–0.3	3	V
Output Voltage	PH	–1	20	V
	PH 10 ns Transient	–3	20	V
	V_{OUT}	–0.3	6	V
Source Current	RT/CLK, INH/UVLO		±100	µA
	PH		current limit	A
Sink Current	PH		current limit	A
	PVIN		current limit	A
	PWRGD	–0.1	2	mA
Operating Junction Temperature		–40	125[2]	°C
Storage Temperature		–65	150	°C
Peak Reflow Case Temperature[3]			245[4]	°C
Maximum Number of Reflows Allowed[3]			3[4]	
Mechanical Shock	Mil-STD-883D, Method 2002.3, 1 msec, 1/2 sine, mounted		1500	G
Mechanical Vibration	Mil-STD-883D, Method 2007.2, 20-2000 Hz		20	

(1) Stresses beyond those listed under absolute maximum ratings may cause permanent damage to the device. These are stress ratings only, and functional operation of the device at these or any other conditions beyond those indicated under recommended operating conditions is not implied. Exposure to absolute-maximum-rated conditions for extended periods may affect device reliability.
(2) See the temperature derating curves in the Typical Characteristics section for thermal information.
(3) For soldering specifications, refer to the *Soldering Requirements for BQFN Packages* application note.
(4) Devices with a date code prior to week 14 2018 (1814) have a peak reflow case temperature of 240°C with a maximum of one reflow.

5.2 ESD Ratings

			VALUE	UNIT
$V_{(ESD)}$	Electrostatic discharge	Human-body model (HBM), per ANSI/ESDA/JEDEC JS-001[1]	±1500	V
		Charged-device model (CDM), per JEDEC specification JESD22-C101[2]	±1000	

(1) JEDEC document JEP155 states that 500-V HBM allows safe manufacturing with a standard ESD control process.
(2) JEDEC document JEP157 states that 250-V CDM allows safe manufacturing with a standard ESD control process.

5.3 Recommended Operating Conditions

over operating free-air temperature range (unless otherwise noted)

		MIN	NOM	MAX	UNIT
PV_{IN}	Input Switching Voltage	2.95		17	V
V_{IN}	Input Bias Voltage	4.5		17	V
V_{OUT}	Output Voltage	0.6		5.5	V
f_{SW}	Switching Frequency	200		1200	kHz

5.4 Package Specifications

LMZ31707		UNIT
Weight		1.45 grams
Flammability	Meets UL 94 V-O	
MTBF Calculated reliability	Per Bellcore TR-332, 50% stress, T_A = 40°C, ground benign	37.4 MHrs

5.5 Thermal Information

THERMAL METRIC[1]		LMZ31707 RVQ42 42 PINS	UNIT
θ_{JA}	Junction-to-ambient thermal resistance[2]	13.3	°C/W
ψ_{JT}	Junction-to-top characterization parameter[3]	1.6	°C/W
ψ_{JB}	Junction-to-board characterization parameter[4]	5.3	°C/W

(1) For more information about traditional and new thermal metrics, see the *Semiconductor and IC Package Thermal Metrics* application report.
(2) The junction-to-ambient thermal resistance, θ_{JA}, applies to devices soldered directly to a 100 mm × 100 mm double-sided PCB with 2-oz. copper and natural convection cooling. Additional airflow reduces θ_{JA}.
(3) The junction-to-top characterization parameter, ψ_{JT}, estimates the junction temperature, T_J, of a device in a real system, using a procedure described in JESD51-2A (sections 6 and 7). $T_J = \psi_{JT}$ * Pdis + T_T; where Pdis is the power dissipated in the device and T_T is the temperature of the top of the device.
(4) The junction-to-board characterization parameter, ψ_{JB}, estimates the junction temperature, T_J, of a device in a real system, using a procedure described in JESD51-2A (sections 6 and 7). $T_J = \psi_{JB}$ * Pdis + T_B; where Pdis is the power dissipated in the device and T_B is the temperature of the board 1mm from the device.

5.6 Electrical Characteristics

Over –40°C to 85°C free-air temperature, $PV_{IN} = V_{IN}$ = 12 V, V_{OUT} = 1.8 V, I_{OUT} = 7 A, C_{IN} = 0.1 µF + 2 x 22 µF ceramic + 100 µF bulk, C_{OUT} = 4 x 47 µF ceramic (unless otherwise noted) [1]

PARAMETER		TEST CONDITIONS		MIN	TYP	MAX	UNIT
I_{OUT}	Output current	T_A = 85°C, natural convection		0		7	A
V_{IN}	Input bias voltage range	Over output current range		4.5		17	V
PV_{IN}	Input switching voltage range	Over output current range		2.95[2]		17[3]	V
UVLO	V_{IN} Undervoltage lockout	V_{IN} Increasing			4.0	4.5	V
		V_{IN} Decreasing		3.5	3.85		
$V_{OUT(adj)}$	Output voltage adjust range	Over output current range		0.6		5.5	V
V_{OUT}	Set-point voltage tolerance	T_A = 25°C, I_{OUT} = 0 A				±1%[4]	
	Temperature variation	–40°C ≤ T_A ≤ +85°C, I_{OUT} = 0 A			±0.2%		
	Line regulation	Over input voltage range			±0.1%		
	Load regulation	Over output current range			±0.2%		
	Total output voltage variation	Includes set-point, line, load, and temperature variation				±1.5%[4]	
η	Efficiency	$P_{VIN} = V_{IN}$ = 12 V, I_O = 4 A	V_{OUT} = 5.0 V, f_{SW} = 1 MHz		94 %		
			V_{OUT} = 3.3 V, f_{SW} = 750 kHz		92 %		
			V_{OUT} = 2.5 V, f_{SW} = 750 kHz		90 %		
			V_{OUT} = 1.8 V, f_{SW} = 500 kHz		89 %		
			V_{OUT} = 1.2 V, f_{SW} = 300 kHz		87 %		
			V_{OUT} = 0.9 V, f_{SW} = 250 kHz		85 %		
			V_{OUT} = 0.6 V, f_{SW} = 200 kHz		82 %		
		$P_{VIN} = V_{IN}$ = 5 V, I_O = 4 A	V_{OUT} = 3.3 V, f_{SW} = 750 kHz		95 %		
			V_{OUT} = 2.5 V, f_{SW} = 750 kHz		93 %		
			V_{OUT} = 1.8 V, f_{SW} = 500 kHz		92 %		
			V_{OUT} = 1.2 V, f_{SW} = 300 kHz		90 %		
			V_{OUT} = 0.9 V, f_{SW} = 250 kHz		87 %		
			V_{OUT} = 0.6 V, f_{SW} = 200 kHz		84 %		
	Output voltage ripple	20 MHz bandwith			14		mV_{P-P}
I_{LIM}	Current limit threshold	ILIM pin open			12		A
		ILIM pin to AGND			9		A
	Transient response	1.0 A/µs load step from 25 to 75% $I_{OUT(max)}$	Recovery time		tbd		µs
			V_{OUT} over/undershoot		tbd		mV

(1) See the Light Load Efficiency (LLE) section for more information for output voltages < 1.5 V.
(2) The minimum P_{VIN} is 2.95 V or (V_{OUT} + 0.7 V), whichever is greater. See for more details.
(3) The maximum PV_{IN} voltage is 17 V or (22 x V_{OUT}), whichever is less. See for more details.
(4) The stated limit of the set-point voltage tolerance includes the tolerance of both the internal voltage reference and the internal adjustment resistor. The overall output voltage tolerance will be affected by the tolerance of the external R_{SET} resistor.

Copyright © 2013–2020, Texas Instruments Incorporated

Electrical Characteristics (continued)

Over –40°C to 85°C free-air temperature, PV_{IN} = V_{IN} = 12 V, V_{OUT} = 1.8 V, I_{OUT} = 7 A, C_{IN} = 0.1 µF + 2 x 22 µF ceramic + 100 µF bulk, C_{OUT} = 4 x 47 µF ceramic (unless otherwise noted) (1)

PARAMETER		TEST CONDITIONS		MIN	TYP	MAX	UNIT
V_{INH}	Inhibit threshold voltage	Inhibit High Voltage		1.3		open(5)	V
		Inhibit Low Voltage		-0.3		1.1	
I_{INH}	INH Input current	V_{INH} < 1.1 V			-1.15		µA
	INH Hysteresis current	V_{INH} > 1.3 V			-3.3		µA
$I_{I(stby)}$	Input standby current	INH pin to AGND			2	10	µA
Power Good	PWRGD Thresholds	V_{OUT} rising	Good		95%		
			Fault		108%		
		V_{OUT} falling	Fault		91%		
			Good		104%		
	PWRGD Low Voltage	I(PWRGD) = 0.5 mA				0.3	V
f_{SW}	Switching frequency	R_{RT} = 169 kΩ		400	500	600	kHz
f_{CLK}	Synchronization frequency	CLK Control		200		1200	kHz
V_{CLK-H}	CLK High-Level			2.0		5.5	V
V_{CLK-L}	CLK Low-Level					0.5	V
D_{CLK}	CLK Duty Cycle			20	50	80	%
	Thermal Shutdown	Thermal shutdown			175		°C
		Thermal shutdown hysteresis			10		°C
C_{IN}	External input capacitance		Ceramic	44(6)			µF
			Non-ceramic		100(6)		
C_{OUT}	External output capacitance		Ceramic	47(7)	200	1500	µF
			Non-ceramic		220(7)	5000(8)	
		Equivalent series resistance (ESR)				35	mΩ

(5) This pin has an internal pullup. If it is left open, the device operates when input power is applied. A small, low-leakage MOSFET is recommended for control. When the device is operating and no UVLO resistor divider is present on this pin, the open voltage is typically 2.9 V.
(6) A minimum of 44 µF of external ceramic capacitance is required across the input (VIN and PVIN connected) for proper operation. An additional 100 µF of bulk capacitance is recommended. It is also recommended to place a 0.1 µF ceramic capacitor directly across the PVIN and PGND pins of the device. Locate the input capacitance close to the device. When operating with split VIN and PVIN rails, place 4.7 µF of ceramic capacitance directly at the VIN pin. See Table 4 for more details.
(7) The amount of required output capacitance varies depending on the output voltage (see Table 3). The amount of required capacitance must include at least 1x 47-µF ceramic capacitor. Locate the capacitance close to the device. Adding additional capacitance close to the load improves the response of the regulator to load transients. See Table 3 and Table 4 more details.
(8) When using both ceramic and non-ceramic output capacitors, the combined maximum must not exceed 5000 µF. It may be necessary to increase the slow start time when turning on into the maximum capacitance. See the *Slow Start (SS/TR)* section for information on adjusting the slow start time.

6 Device Information

Functional Block Diagram

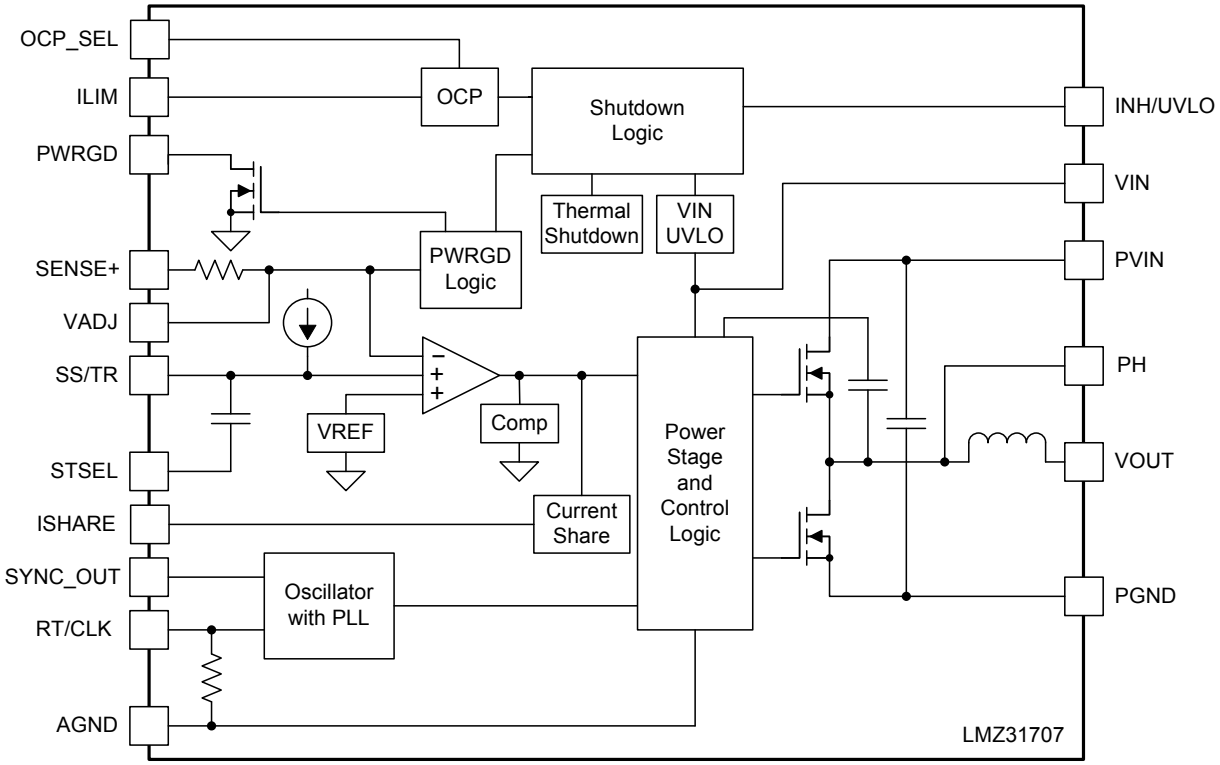

Copyright © 2013–2020, Texas Instruments Incorporated

Pin Functions

TERMINAL		DESCRIPTION
NAME	NO.	
AGND	2	Zero volt reference for the analog control circuit. These pins are not connected together internal to the device and must be connected to one another using an AGND plane of the PCB. These pins are associated with the internal analog ground (AGND) of the device. Keep AGND separate from PGND, as a single connection is made internal to the device. See the *Layout Considerations*.
	23	
PGND	20	This is the return current path for the power stage of the device. Connect these pins to the load and to the bypass capacitors associated with PVIN and V_{OUT}. Keep PGND separate from AGND, as a single connection is made internal to the device.
	21	
	31	
	32	
	33	
VIN	3	Input bias voltage pin. Supplies the control circuitry of the power converter. Connect this pin to the input bias supply. Connect bypass capacitors between this pin and PGND.
PVIN	1	Input switching voltage. Supplies voltage to the power switches of the converter. Connect these pins to the input supply. Connect bypass capacitors between these pins and PGND.
	11	
	12	
	39	
	40	
V_{OUT}	34	Output voltage. These pins are connected to the internal output inductor. Connect these pins to the output load and connect external bypass capacitors between these pins and PGND.
	35	
	36	
	37	
	38	
	41	
PH	10	Phase switch node. These pins must be connected to one another using a small copper island under the device for thermal relief. Do not place any external component on these pins or tie them to a pin of another function.
	13	
	14	
	15	
	16	
	17	
	18	
	19	
	42	
DNC	5	Do Not Connect. Do not connect these pins to AGND, to another DNC pin, or to any other voltage. These pins are connected to internal circuitry. Each pin must be soldered to an isolated pad.
	9	
	24	
ISHARE	25	Current share pin. Connect this pin to the ISHARE pin of the other LMZ31707 device when paralleling multiple LMZ31707 devices. When unused, treat this pin as a Do Not Connect (DNC) and leave it isolated from all other signals or ground.
OCP_SEL	4	Over \current protection select pin. Leave this pin open for hiccup mode operation. Connect this pin to AGND for cycle-by-cycle operation. See the *Overcurrent Protection* section for more details.
ILIM	6	Current limit pin. Leave this pin open for full current limit threshold. Connect this pin to AGND to reduce the current limit threshold by approximately 3 A.
SYNC_OUT	7	Synchronization output pin. Provides a 180° out-of-phase clock signal.
PWRGD	8	Power Good flag pin. This open drain output asserts low if the output voltage is more than approximately ±6% out of regulation. A pullup resistor is required.
RT/CLK	22	This pin is connected to an internal frequency setting resistor which sets the default switching frequency. An external resistor can be connected from this pin to AGND to increase the frequency. This pin can also be used to synchronize to an external clock.
VADJ	26	Connecting a resistor between this pin and AGND sets the output voltage.
SENSE+	27	Remote sense connection. This pin must be connected to V_{OUT} at the load or at the device pins. Connect this pin to V_{OUT} at the load for improved regulation.

Copyright © 2013–2020, Texas Instruments Incorporated

Pin Functions (continued)

TERMINAL		DESCRIPTION
NAME	NO.	
SS/TR	28	Slow-start and tracking pin. Connecting an external capacitor to this pin adjusts the output voltage rise time. A voltage applied to this pin allows for tracking and sequencing control.
STSEL	29	Slow-start or track feature select. Connect this pin to AGND to enable the internal SS capacitor. Leave this pin open to enable the TR feature.
INH/UVLO	30	Inhibit and UVLO adjust pin. Use an open drain or open collector logic device to ground this pin to control the INH function. A resistor divider between this pin, AGND, and PVIN/VIN sets the UVLO voltage.

RVQ PACKAGE
(TOP VIEW)

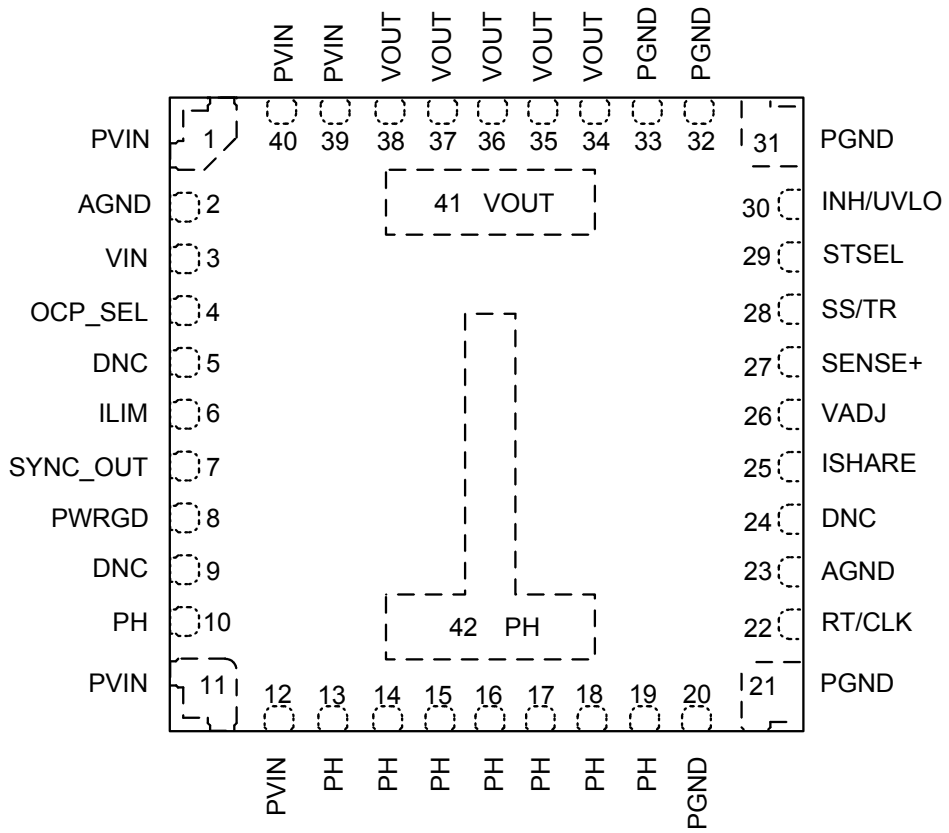

Copyright © 2013–2020, Texas Instruments Incorporated

7 Typical Characteristics (PVIN = VIN = 12 V)

The electrical characteristic data has been developed from actual products tested at 25°C. This data is considered typical for the converter. Applies to Figure 1, Figure 2, and Figure 3. The temperature derating curves represent the conditions at which internal components are at or below the manufacturer's maximum operating temperatures. Derating limits apply to devices soldered directly to a 100-mm × 100-mm, 4-layer PCB with 2-oz. copper. Applies to Figure 4.

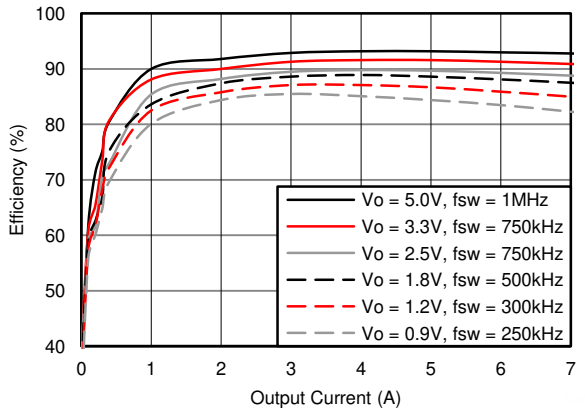

Figure 1. Efficiency versus Output Current

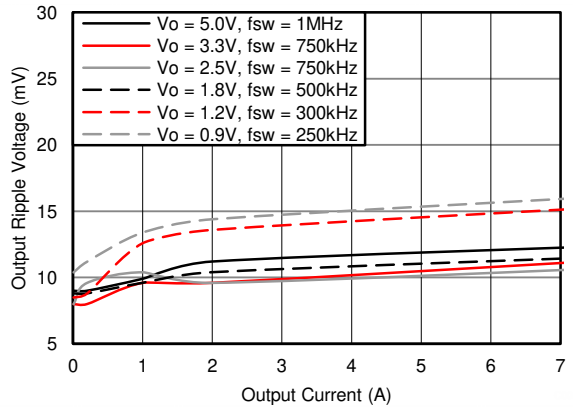

Figure 2. Voltage Ripple versus Output Current

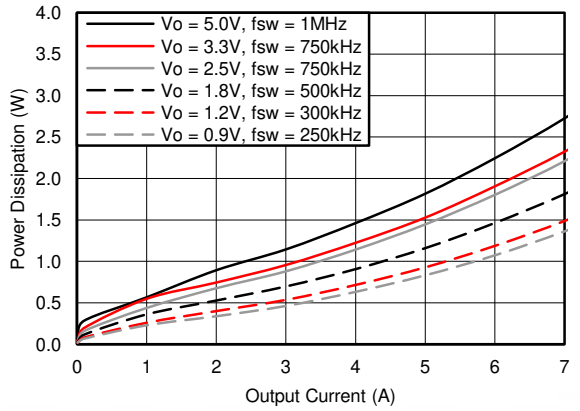

Figure 3. Power Dissipation versus Output Current

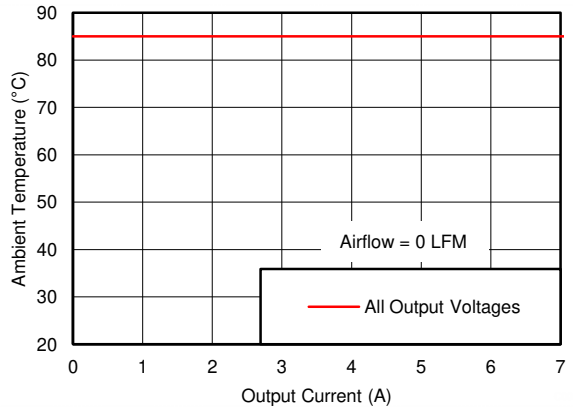

Figure 4. Safe Operating Area

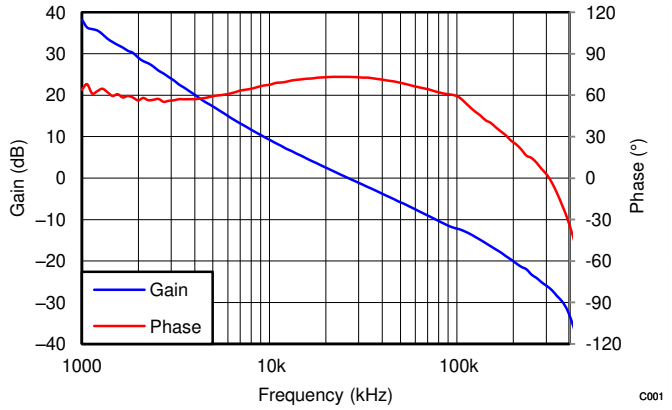

Figure 5. V_{OUT} = 1.8 V, I_{OUT} = 7 A, C_{OUT} = 200 µF Ceramic, f_{SW} = 500 kHz

8 Typical Characteristics (PVIN = VIN = 5 V)

The electrical characteristic data has been developed from actual products tested at 25°C. This data is considered typical for the converter. Applies to Figure 6, Figure 7, and Figure 8. The temperature derating curves represent the conditions at which internal components are at or below the manufacturer's maximum operating temperatures. Derating limits apply to devices soldered directly to a 100-mm × 100-mm, 4-layer PCB with 2-oz. copper. Applies to Figure 9.

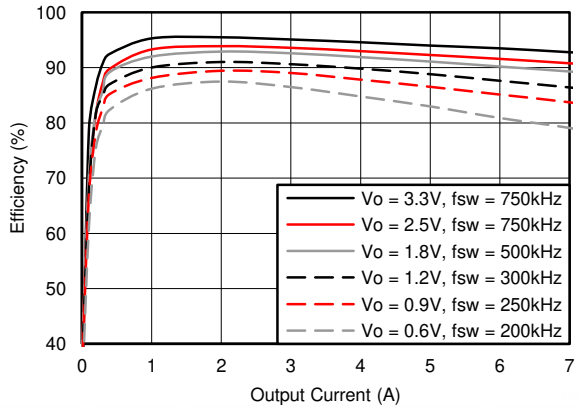

Figure 6. Efficiency versus Output Current

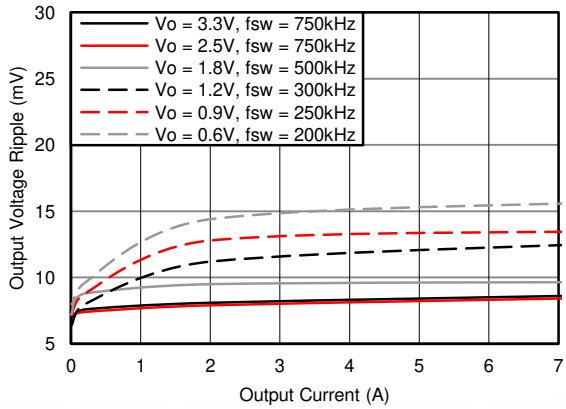

Figure 7. Voltage Ripple versus Output Current

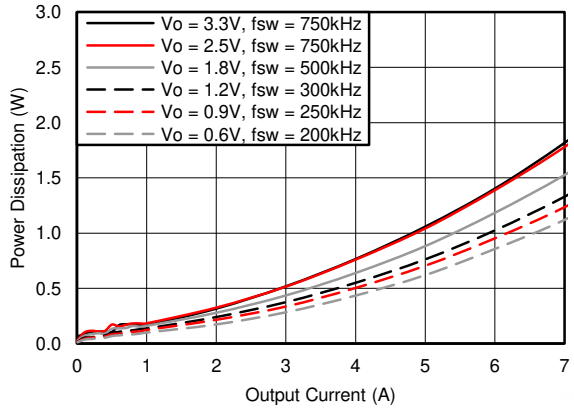

Figure 8. Power Dissipation versus Output Current

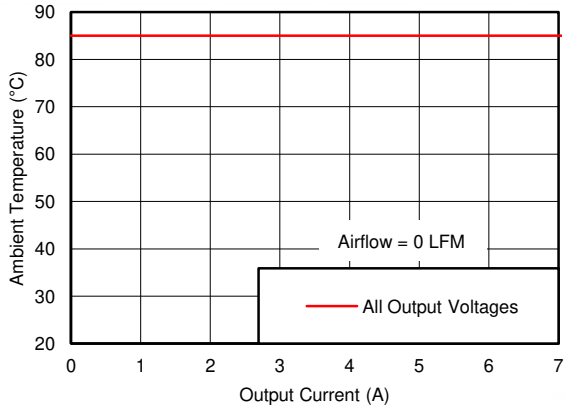

Figure 9. Safe Operating Area

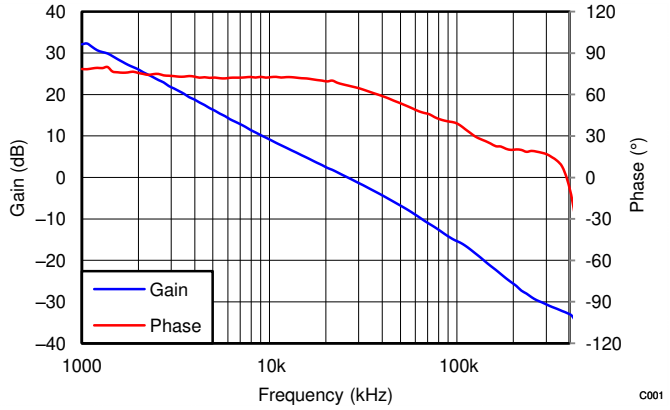

Figure 10. V_{OUT} = 1.8 V, I_{OUT} = 7 A, C_{OUT} = 200 µF Ceramic, f_{SW} = 500 kHz

Copyright © 2013–2020, Texas Instruments Incorporated

9 Typical Characteristics (PVIN = 3.3 V, VIN = 5 V)

The electrical characteristic data has been developed from actual products tested at 25°C. This data is considered typical for the converter. Applies to Figure 11, Figure 12, and Figure 13. The temperature derating curves represent the conditions at which internal components are at or below the manufacturer's maximum operating temperatures. Derating limits apply to devices soldered directly to a 100-mm × 100-mm, 4-layer PCB with 2-oz. copper. Applies to Figure 14.

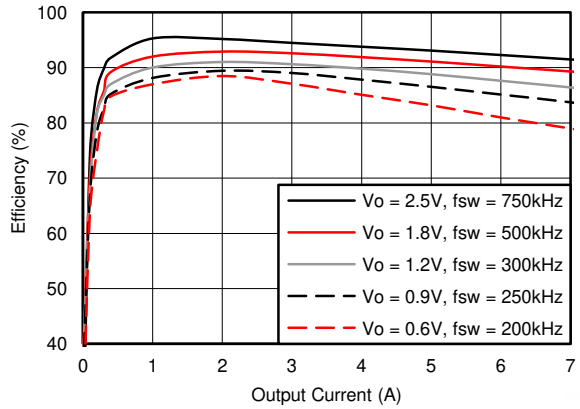

Figure 11. Efficiency versus Output Current

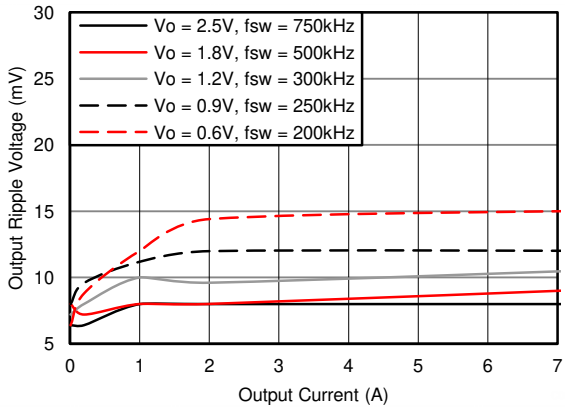

Figure 12. Voltage Ripple versus Output Current

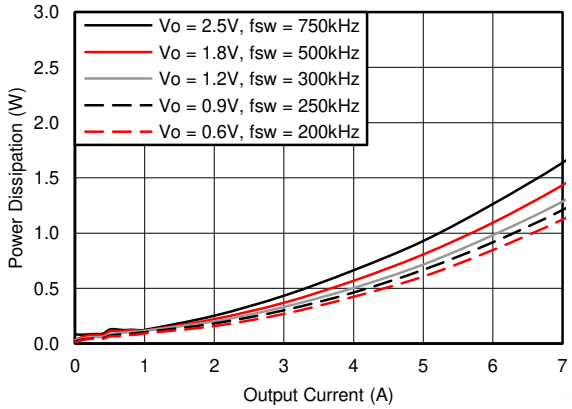

Figure 13. Power Dissipation versus Output Current

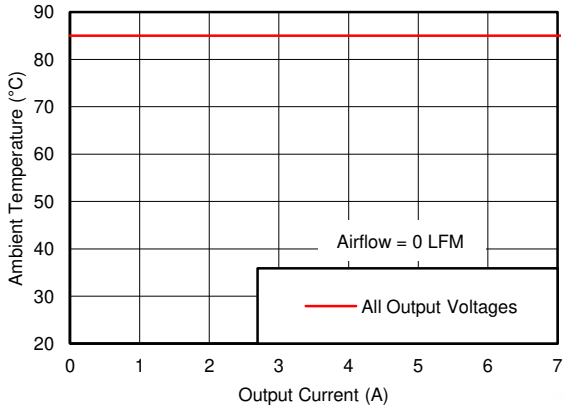

Figure 14. Safe Operating Area

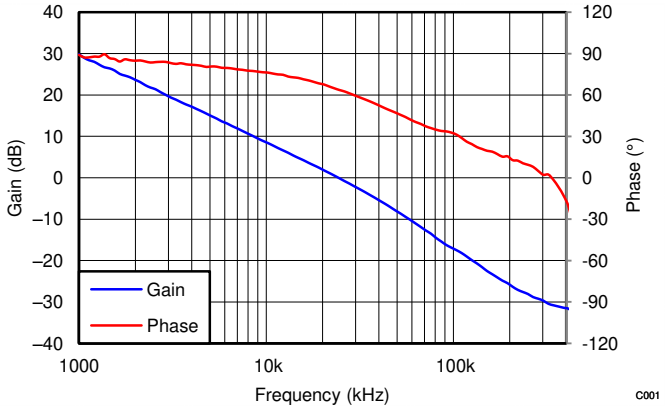

Figure 15. V_{OUT} = 1.8 V, I_{OUT} = 7 A, C_{OUT} = 200 µF Ceramic, f_{SW} = 500 kHz

10 Application Information

10.1 Adjusting the Output Voltage

The VADJ control sets the output voltage of the LMZ31707. The output voltage adjustment range is from 0.6 V to 5.5 V. The adjustment method requires the addition of R_{SET}, which sets the output voltage, the connection of SENSE+ to V_{OUT}, and in some cases, R_{RT} which sets the switching frequency. The R_{SET} resistor must be connected directly between the VADJ (pin 26) and AGND (pin 23). The SENSE+ pin (pin 27) must be connected to V_{OUT} either at the load for improved regulation or at V_{OUT} of the device. The R_{RT} resistor must be connected directly between the RT/CLK (pin 22) and AGND (pin 23). Table 1 gives the standard external R_{SET} resistor for a number of common bus voltages, along with the recommended R_{RT} resistor for that output voltage.

Table 1. Standard R_{SET} Resistor Values for Common Output Voltages

RESISTORS	OUTPUT VOLTAGE V_{OUT} (V)						
	0.9	1.0	1.2	1.8	2.5	3.3	5.0
R_{SET} (kΩ)	2.87	2.15	1.43	0.715	0.453	0.316	0.196
R_{RT} (kΩ)	1000	1000	487	169	90.9	90.9	63.4

For other output voltages, the value of the required resistor can either be calculated using the following formula, or simply selected from the range of values given in Table 2.

$$R_{SET} = \frac{1.43}{\left(\left(\frac{V_{OUT}}{0.6}\right) - 1\right)} \ (k\Omega) \tag{1}$$

Table 2. Standard R_{SET} Resistor Values

V_{OUT} (V)	R_{SET} (kΩ)	R_{RT}(kΩ)	f_{SW}(kHz)	V_{OUT} (V)	R_{SET} (kΩ)	R_{RT}(kΩ)	f_{SW}(kHz)
0.6	open	OPEN	200	3.1	0.348	90.9	750
0.7	8.66	OPEN	200	3.2	0.332	90.9	750
0.8	4.32	OPEN	200	3.3	0.316	90.9	750
0.9	2.87	1000	250	3.4	0.309	90.9	750
1.0	2.15	1000	250	3.5	0.294	90.9	750
1.1	1.74	1000	250	3.6	0.287	90.9	750
1.2	1.43	487	300	3.7	0.280	90.9	750
1.3	1.24	487	300	3.8	0.267	90.9	750
1.4	1.07	487	300	3.9	0.261	90.9	750
1.5	0.953	487	300	4.0	0.255	90.9	750
1.6	0.866	487	300	4.1	0.243	63.4	1000
1.7	0.787	487	300	4.2	0.237	63.4	1000
1.8	0.715	169	500	4.3	0.232	63.4	1000
1.9	0.665	169	500	4.4	0.226	63.4	1000
2.0	0.619	169	500	4.5	0.221	63.4	1000
2.1	0.576	169	500	4.6	0.215	63.4	1000
2.2	0.536	169	500	4.7	0.210	63.4	1000
2.3	0.511	169	500	4.8	0.205	63.4	1000
2.4	0.475	169	500	4.9	0.200	63.4	1000
2.5	0.453	90.9	750	5.0	0.196	63.4	1000
2.6	0.432	90.9	750	5.1	0.191	63.4	1000
2.7	0.412	90.9	750	5.2	0.187	63.4	1000
2.8	0.392	90.9	750	5.3	0.182	63.4	1000
2.9	0.374	90.9	750	5.4	0.178	63.4	1000
3.0	0.357	90.9	750	5.5	0.174	63.4	1000

Copyright © 2013–2020, Texas Instruments Incorporated

10.2 Capacitor Recommendations for the LMZ31707 Power Supply

10.2.1 Capacitor Technologies

10.2.1.1 Electrolytic, Polymer-Electrolytic Capacitors

When using electrolytic capacitors, high-quality, computer-grade electrolytic capacitors are recommended. Polymer-electrolytic type capacitors are recommended for applications where the ambient operating temperature is less than 0°C. The Sanyo OS-CON capacitor series is suggested due to the lower ESR, higher rated surge, power dissipation, ripple current capability, and small package size. Aluminum electrolytic capacitors provide adequate decoupling over the frequency range of 2 kHz to 150 kHz, and are suitable when ambient temperatures are above 0°C.

10.2.1.2 Ceramic Capacitors

The performance of aluminum electrolytic capacitors is less effective than ceramic capacitors above 150 kHz. Multilayer ceramic capacitors have a low ESR and a resonant frequency higher than the bandwidth of the regulator. They can be used to reduce the reflected ripple current at the input as well as improve the transient response of the output.

10.2.1.3 Tantalum, Polymer-Tantalum Capacitors

Polymer-tantalum type capacitors are recommended for applications where the ambient operating temperature is less than 0°C. The Sanyo POSCAP series and Kemet T530 capacitor series are recommended rather than many other tantalum types due to their lower ESR, higher rated surge, power dissipation, ripple current capability, and small package size. Tantalum capacitors that have no stated ESR or surge current rating are not recommended for power applications.

10.2.2 Input Capacitor

The LMZ31707 requires a minimum input capacitance of 44 µF of ceramic type. An additional 100 µF of non-ceramic capacitance is recommended for applications with transient load requirements. The voltage rating of input capacitors must be greater than the maximum input voltage. At worst case, when operating at 50% duty cycle and maximum load, the combined ripple current rating of the input capacitors must be at least 3.5 Arms. Table 4 includes a preferred list of capacitors by vendor. It is also recommended to place a 0.1-µF ceramic capacitor directly across the PVIN and PGND pins of the device. When operating with split VIN and PVIN rails, place 4.7µF of ceramic capacitance directly at the VIN pin.

10.2.3 Output Capacitor

The required output capacitance is determined by the output voltage of the LMZ31707. See Table 3 for the amount of required capacitance. The effects of temperature and capacitor voltage rating must be considered when selecting capacitors to meet the minimum required capacitance. The required output capacitance can be comprised of all ceramic capacitors, or a combination of ceramic and bulk capacitors. The required capacitance must include at least one 47-µF ceramic. When adding additional non-ceramic bulk capacitors, low-ESR devices like the ones recommended in Table 4 are required. The required capacitance above the minimum is determined by actual transient deviation requirements. Table 4 includes a preferred list of capacitors by vendor.

Table 3. Required Output Capacitance

V_{OUT} RANGE (V)		MINIMUM REQUIRED C_{OUT} (µF)
MIN	MAX	
0.6	< 0.8	500 µF (1)
0.8	< 1.2	300 µF (1)
1.2	< 3.0	200 µF (1)
3.0	< 4.0	100 µF (1)
4.0	5.5	47 µF ceramic

(1) Minimum required must include at least one 47 µF ceramic capacitor.

Table 4. Recommended Input/Output Capacitors (1)

VENDOR	SERIES	PART NUMBER	CAPACITOR CHARACTERISTICS		
			WORKING VOLTAGE (V)	CAPACITANCE (µF)	ESR (2) (mΩ)
Murata	X5R	GRM32ER61E226K	25	22	2
TDK	X5R	C3225X5R0J107M	6.3	100	2
TDK	X5R	C3225X5R0J476K	6.3	47	2
Murata	X5R	GRM32ER60J107M	6.3	100	2
Murata	X5R	GRM32ER60J476M	6.3	47	2
Panasonic	EEH-ZA	EEH-ZA1E101XP	25	100	30
Sanyo	POSCAP	16TQC68M	16	68	50
Kemet	T520	T520V107M010ASE025	10	100	25
Sanyo	POSCAP	10TPE220ML	10	220	25
Sanyo	POSCAP	6TPE100MI	6.3	100	25
Sanyo	POSCAP	2R5TPE220M7	2.5	220	7
Kemet	T530	T530D227M006ATE006	6.3	220	6
Kemet	T530	T530D337M006ATE010	6.3	330	10
Sanyo	POSCAP	2TPF330M6	2.0	330	6
Sanyo	POSCAP	6TPE330MFL	6.3	330	15

(1) **Capacitor Supplier Verification, RoHS, Lead-free, and Material Details**
Consult capacitor suppliers regarding availability, material composition, RoHS and lead-free status, and manufacturing process requirements for any capacitors identified in this table.
(2) Maximum ESR at 100 kHz, 25°C.

10.3 Transient Response

Table 5. Output Voltage Transient Response

C_{IN1} = 3x 22 µF CERAMIC, C_{IN2} = 100 µF POLYMER-TANTALUM						
V_{OUT} (V)	V_{IN} (V)	C_{OUT1} CERAMIC	C_{OUT2} BULK	VOLTAGE DEVIATION (mV)		RECOVERY TIME (µs)
				2 A LOAD STEP, (1 A/µs)	3.5 A LOAD STEP, (1 A/µs)	
0.6	5	500 µF	220 µF	30	45	90
	12	500 µF	220 µF	30	45	90
0.9	5	300 µF	220 µF	40	65	95
		300 µF	470 µF	35	60	95
	12	300 µF	220 µF	35	60	95
		300 µF	470 µF	30	55	95
1.2	5	200 µF	220 µF	50	85	100
		200 µF	470 µF	45	75	100
	12	200 µF	220 µF	45	80	100
		200 µF	470 µF	40	70	100
1.8	5	200 µF	220 µF	70	105	110
		200 µF	470 µF	65	90	110
	12	200 µF	220 µF	65	100	120
		200 µF	470 µF	60	90	120
3.3	5	100 µF	220 µF	105	177	130
	12	100 µF	220 µF	115	190	150

Copyright © 2013–2020, Texas Instruments Incorporated

10.4 Transient Waveforms

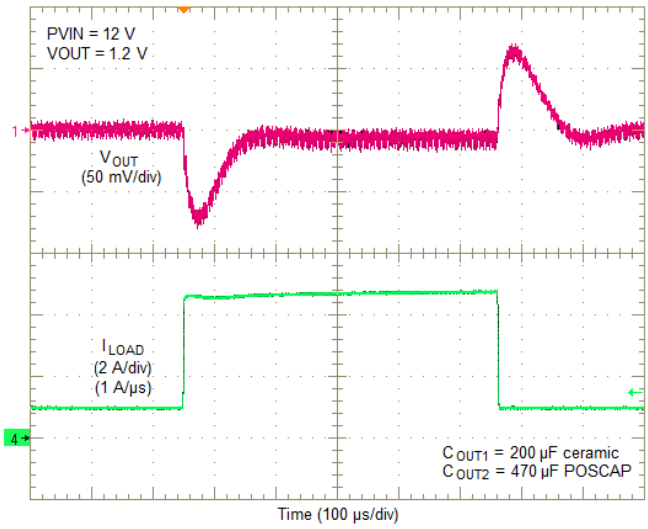

Figure 16. PVIN = 12 V, V_{OUT} = 1.2-V, 3.5-A Load Step

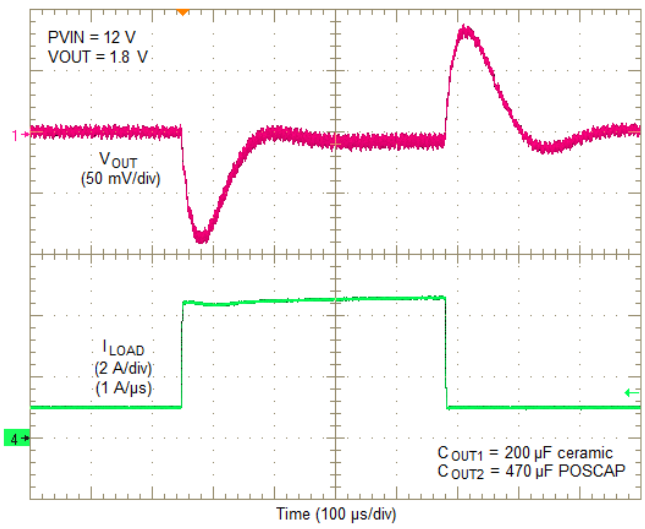

Figure 17. PVIN = 12 V, V_{OUT} = 1.8-V, 3.5-A Load Step

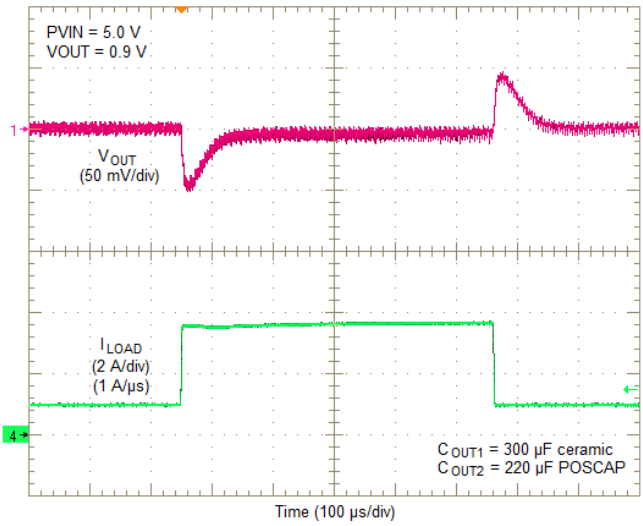

Figure 18. PVIN = 5 V, V_{OUT} = 0.9-V, 2.5-A Load Step

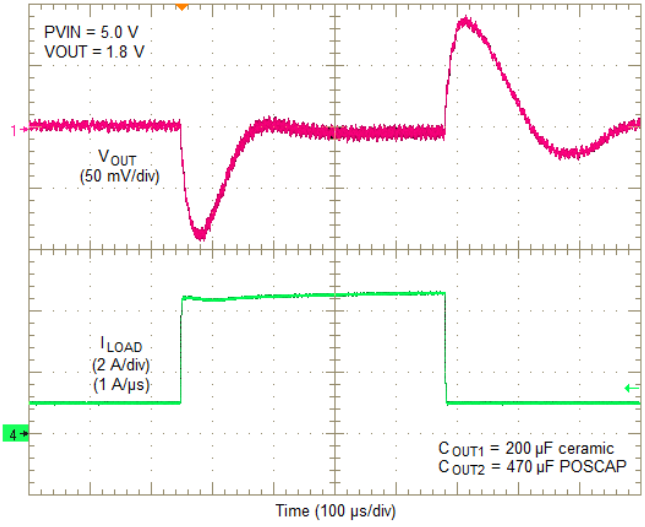

Figure 19. PVIN = 5 V, V_{OUT} = 1.8-V, 3.5-A Load Step

10.5 Application Schematics

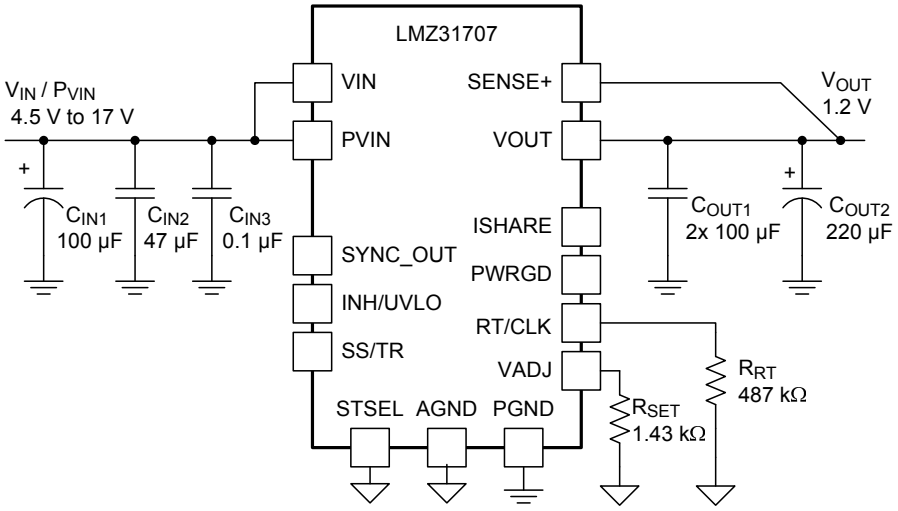

Figure 20. Typical Schematic
PVIN = VIN = 4.5 V to 17 V, V_{OUT} = 1.2 V

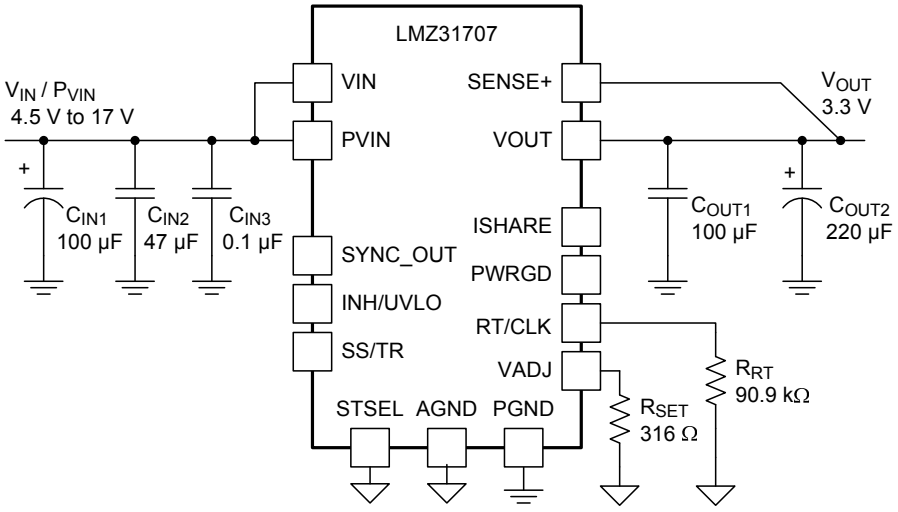

Figure 21. Typical Schematic
PVIN = VIN = 4.5 V to 17 V, V_{OUT} = 3.3 V

Copyright © 2013–2020, Texas Instruments Incorporated

Application Schematics (continued)

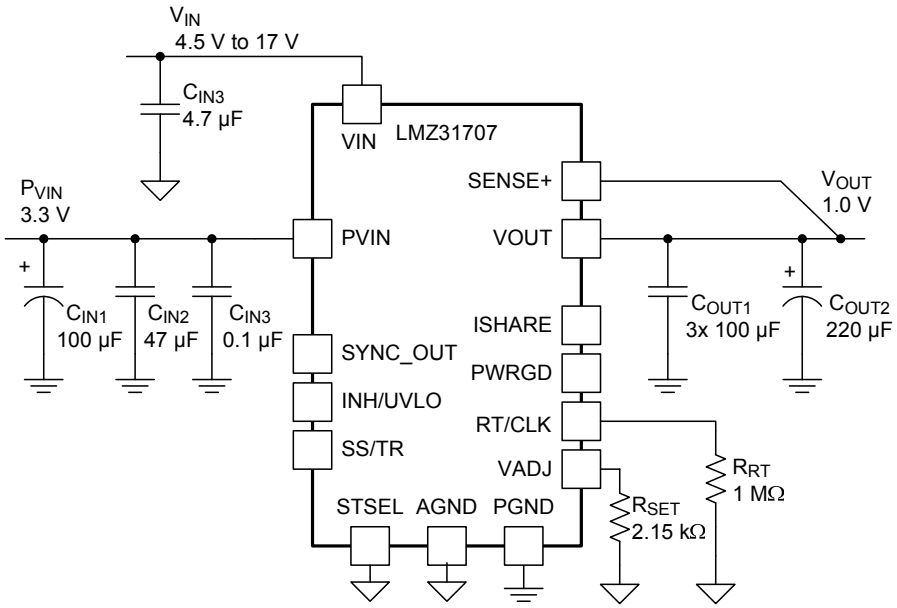

Figure 22. Typical Schematic
PVIN = 3.3 V, VIN = 4.5 V to 17 V, V_{OUT} = 1.0 V

10.6 Custom Design With WEBENCH® Tools

Click here to create a custom design using the LMZ31707 device with the WEBENCH® Power Designer.

1. Start by entering the input voltage (V_{IN}), output voltage (V_{OUT}), and output current (I_{OUT}) requirements.
2. Optimize the design for key parameters such as efficiency, footprint, and cost using the optimizer dial.
3. Compare the generated design with other possible solutions from Texas Instruments.

The WEBENCH Power Designer provides a customized schematic along with a list of materials with real-time pricing and component availability.

In most cases, these actions are available:

- Run electrical simulations to see important waveforms and circuit performance
- Run thermal simulations to understand board thermal performance
- Export customized schematic and layout into popular CAD formats
- Print PDF reports for the design, and share the design with colleagues

Get more information about WEBENCH tools at www.ti.com/WEBENCH.

10.7 VIN and PVIN Input Voltage

The LMZ31707 allows for a variety of applications by using the VIN and PVIN pins together or separately. The VIN voltage supplies the internal control circuits of the device. The PVIN voltage provides the input voltage to the power converter system.

If tied together, the input voltage for the VIN pin and the PVIN pin can range from 4.5 V to 17 V. If using the VIN pin separately from the PVIN pin, the VIN pin must be greater than 4.5 V, and the PVIN pin can range from as low as 2.95 V to 17 V. When operating from a split rail, it is recommended to supply VIN from 5 V to 12 V, for best performance. A voltage divider connected to the INH/UVLO pin can adjust either input voltage UVLO appropriately. See the *Programmable Undervoltage Lockout (UVLO)* section of this data sheet for more information.

10.8 3.3 V PVIN Operation

Applications operating from a PVIN of 3.3 V must provide at least 4.5 V for VIN. It is recommended to supply VIN from 5 V to 12 V for best performance. Refer to the *Powering LMZ3 Devices from a 3.3-V Bus Application Report* for help creating 5 V from 3.3 V using a small, simple charge pump device.

10.9 Power Good (PWRGD)

The PWRGD pin is an open drain output. Once the voltage on the SENSE+ pin is between 95% and 104% of the set voltage, the PWRGD pin pull-down is released and the pin floats. The recommended pull-up resistor value is between 10 kΩ and 100 kΩ to a voltage source that is 5.5 V or less. The PWRGD pin is in a defined state once VIN is greater than 1.0 V, but with reduced current sinking capability. The PWRGD pin achieves full current sinking capability once the VIN pin is above 4.5V. The PWRGD pin is pulled low when the voltage on SENSE+ is lower than 91% or greater than 108% of the nominal set voltage. Also, the PWRGD pin is pulled low if the input UVLO or thermal shutdown is asserted, the INH pin is pulled low, or the SS/TR pin is below 1.4 V.

10.10 SYNC_OUT

The LMZ31707 provides a 180° out-of-phase clock signal for applications requiring synchronization. The SYNC_OUT pin produces a 50% duty cycle clock signal that is the same frequency as the device's switching frequency, but is 180° out of phase. Operating two devices 180° out of phase reduces input and output voltage ripple. The SYNC_OUT clock signal is compatible with other LMZ3 devices that have a CLK input.

10.11 Parallel Operation

Up to six LMZ31707 devices can be paralleled for increased output current. Multiple connections must be made between the paralleled devices and the component selection is slightly different than for a stand-alone LMZ31707 device. A typical LMZ31707 parallel schematic is shown in Figure 23. Refer to the *LMZ31710 Parallel Operation Application Report* for information and design help when paralleling multiple LMZ31707 devices.

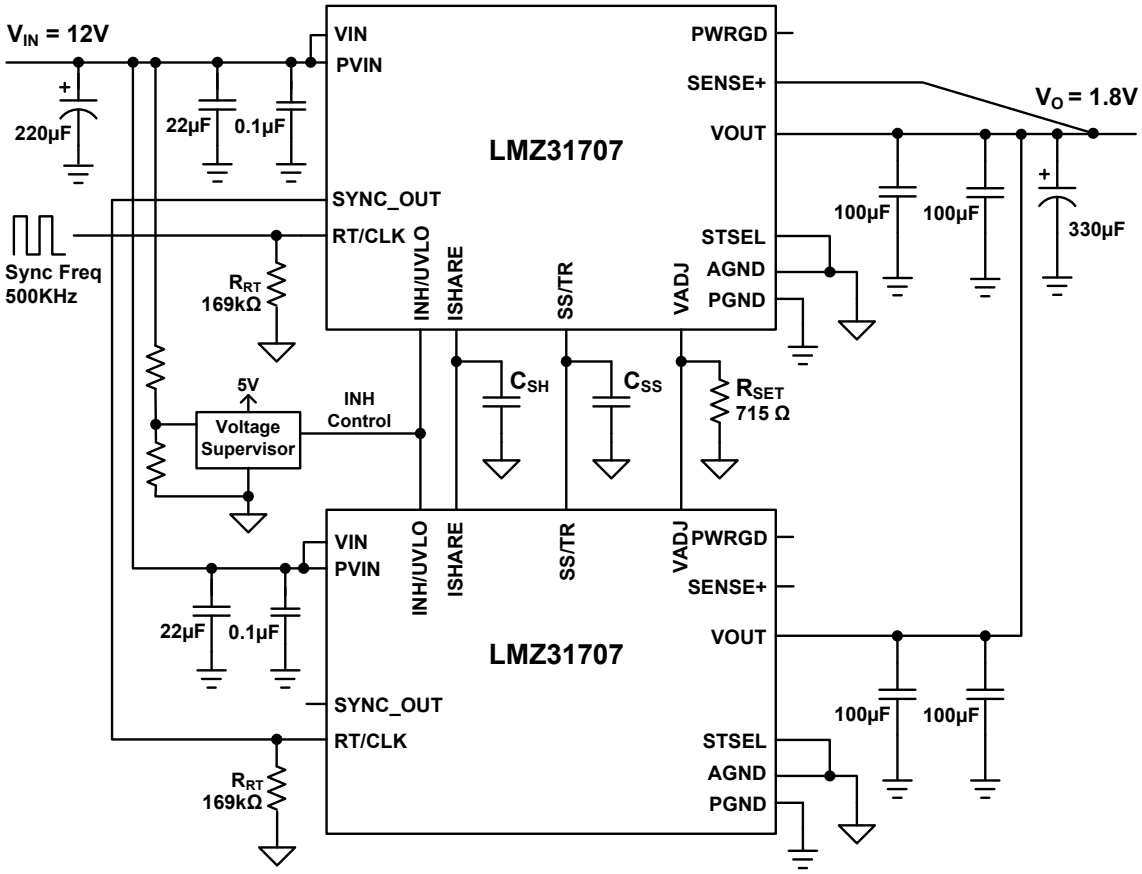

Figure 23. Typical LMZ31707 Parallel Schematic

Copyright © 2013–2020, Texas Instruments Incorporated

10.12 Light Load Efficiency (LLE)

The LMZ31707 operates in pulse skip mode at light load currents to improve efficiency and decrease power dissipation by reducing switching and gate drive losses.

These pulses can cause the output voltage to rise when there is no load to discharge the energy. For output voltages < 1.5 V, a minimum load is required. The amount of required load can be determined by Equation 2. In most cases, the minimum current drawn by the load circuit will be enough to satisfy this load. Applications requiring a load resistor to meet the minimum load, the added power dissipation will be ≤ 3.6 mW. A single 0402 size resistor across V_{OUT} and PGND can be used.

$$I_{MIN} = 600\ \mu A - \left(\frac{V_{OUT}}{1.43k + R_{SET}} \right) (A) \tag{2}$$

When V_{OUT} = 0.6 V and R_{SET} = OPEN, the minimum load current is 600 µA.

10.13 Power-Up Characteristics

When configured as shown in the front page schematic, the LMZ31707 produces a regulated output voltage following the application of a valid input voltage. During the power-up, internal soft-start circuitry slows the rate that the output voltage rises, thereby limiting the amount of in-rush current that can be drawn from the input source. Figure 24 shows the start-up waveforms for a LMZ31707, operating from a 5-V input (PVIN=VIN) and with the output voltage adjusted to 1.8 V. Figure 25 shows the start-up waveforms for a LMZ31707 starting up into a pre-biased output voltage. The waveforms were measured with a 5-A constant current load.

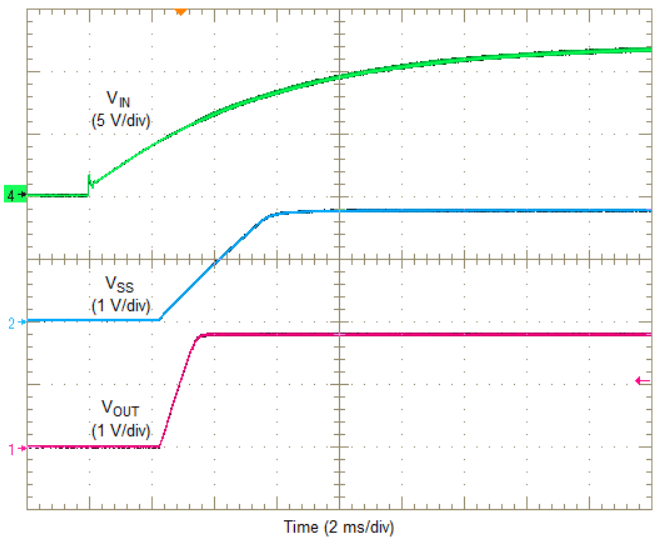

Figure 24. Start-up Waveforms

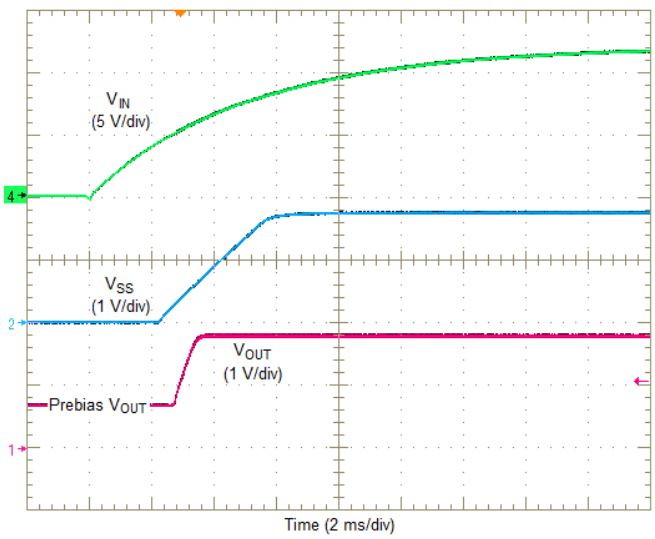

Figure 25. Start-up into Pre-bias

10.14 Pre-Biased Start-up

The LMZ31707 has been designed to prevent the low-side MOSFET from discharging a pre-biased output. During pre-biased start-up, the low-side MOSFET does not turn on until the high-side MOSFET has started switching. The high-side MOSFET does not start switching until the slow-start voltage exceeds the voltage on the VADJ pin. Refer to Figure 25.

10.15 Remote Sense

The SENSE+ pin must be connected to V_{OUT} at the load, or at the device pins.

Connecting the SENSE+ pin to V_{OUT} at the load improves the load regulation performance of the device by allowing it to compensate for any I-R voltage drop between its output pins and the load. An I-R drop is caused by the high output current flowing through the small amount of pin and trace resistance. This should be limited to a maximum of 300 mV.

NOTE

The remote sense feature is not designed to compensate for the forward drop of nonlinear or frequency dependent components that may be placed in series with the converter output. Examples include OR-ing diodes, filter inductors, ferrite beads, and fuses. When these components are enclosed by the SENSE+ connection, they are effectively placed inside the regulation control loop, which can adversely affect the stability of the regulator.

10.16 Thermal Shutdown

The internal thermal shutdown circuitry forces the device to stop switching if the junction temperature exceeds 175°C typically. The device reinitiates the power-up sequence when the junction temperature drops below 165°C typically.

Copyright © 2013–2020, Texas Instruments Incorporated

10.17 Output On/Off Inhibit (INH)

The INH pin provides electrical on/off control of the device. Once the INH pin voltage exceeds the threshold voltage, the device starts operation. If the INH pin voltage is pulled below the threshold voltage, the regulator stops switching and enters low quiescent current state. The INH pin has an internal pullup current source, allowing the user to float the INH pin for enabling the device.

If an application requires controlling the INH pin, use an open drain/collector device, or a suitable logic gate to interface with the pin. Using a voltage superviser to control the INH pin allows control of the turnon and turnoff of the device as opposed to relying on the ramp up or down if the input voltage source.

Figure 26 shows the typical application of the inhibit function. Turning Q1 on applies a low voltage to the inhibit control (INH) pin and disables the output of the supply, shown in Figure 27. If Q1 is turned off, the supply executes a soft-start power-up sequence, as shown in Figure 28. A regulated output voltage is produced within 2 ms. The waveforms were measured with a 5-A constant current load.

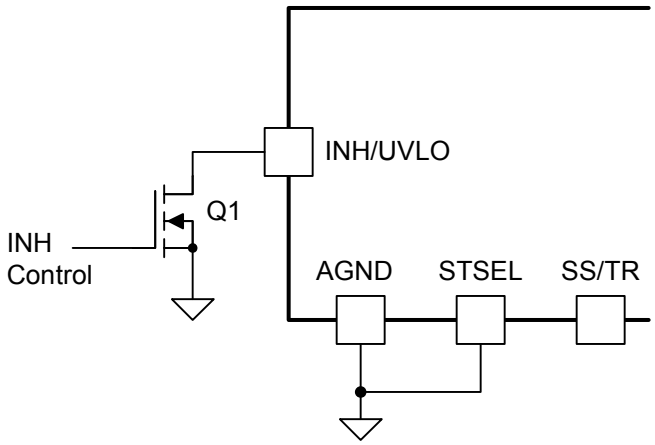

Figure 26. Typical Inhibit Control

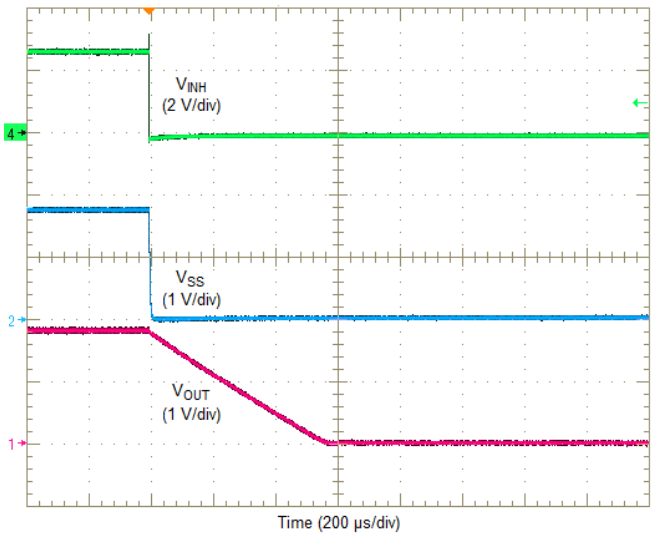

Figure 27. Inhibit Turnoff

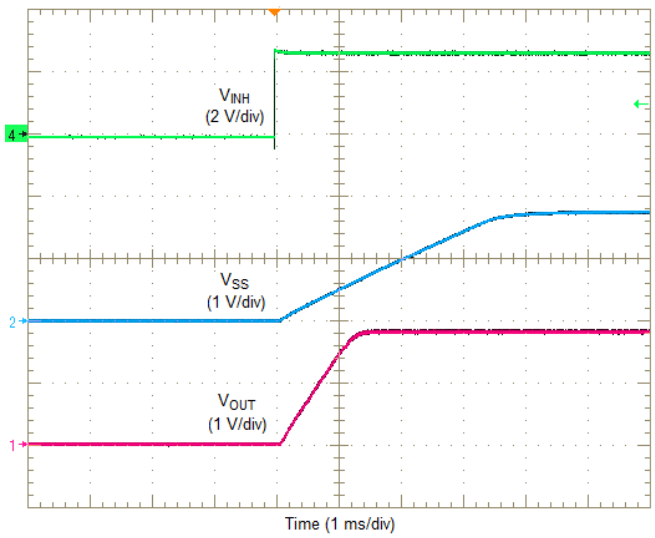

Figure 28. Inhibit Turnon

10.18 Slow Start (SS/TR)

Connecting the STSEL pin to AGND and leaving SS/TR pin open enables the internal SS capacitor with a slow-start interval of approximately 1.2 ms. Adding additional capacitance between the SS pin and AGND increases the slow-start time. Increasing the slow-start time reduces inrush current seen by the input source and reduce the current seen by the device when charging the output capacitors. To avoid the activation of current limit and ensure proper start-up, the SS capacitor can need to be increased when operating near the maximum output capacitance limit.

Figure 29 shows an additional SS capacitor connected to the SS/TR pin and the STSEL pin connected to AGND. See Table 6 for SS capacitor values and timing interval.

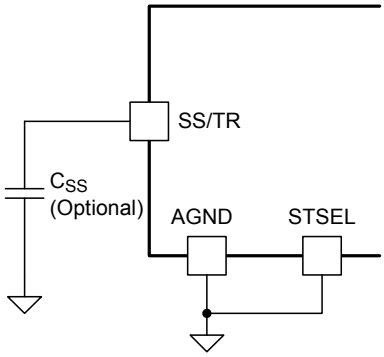

Figure 29. Slow-Start Capacitor (C_{SS}) and STSEL Connection

Table 6. Slow-Start Capacitor Values and Slow-Start Time

C_{SS} (nF)	OPEN	3.3	4.7	10	15	22	33
SS Time (msec)	1.2	2.1	2.5	3.8	5.1	7.0	9.8

10.19 Overcurrent Protection

For protection against load faults, the LMZ31707 incorporates output overcurrent protection. The overcurrent protection mode can be selected using the OCP_SEL pin. Leaving the OCP_SEL pin open selects hiccup mode and connecting it to AGND selects cycle-by-cycle mode. In hiccup mode, applying a load that exceeds the overcurrent threshold of the regulator causes the regulated output to shut down. Following shutdown, the module periodically attempts to recover by initiating a soft-start power-up as shown in Figure 30. This is described as a hiccup mode of operation, whereby the module continues in a cycle of successive shutdown and power-up until the load fault is removed. During this period, the average current flowing into the fault is significantly reduced which reduces power dissipation. Once the fault is removed, the module automatically recovers and returns to normal operation as shown in Figure 31.

In cycle-by-cycle mode, applying a load that exceeds the overcurrent threshold of the regulator limits the output current and reduces the output voltage as shown in Figure 32. During this period, the current flowing into the fault remains high causing the power dissipation to stay high as well. Once the overcurrent condition is removed, the output voltage returns to the set-point voltage as shown in Figure 33.

Copyright © 2013–2020, Texas Instruments Incorporated

Overcurrent Protection (continued)

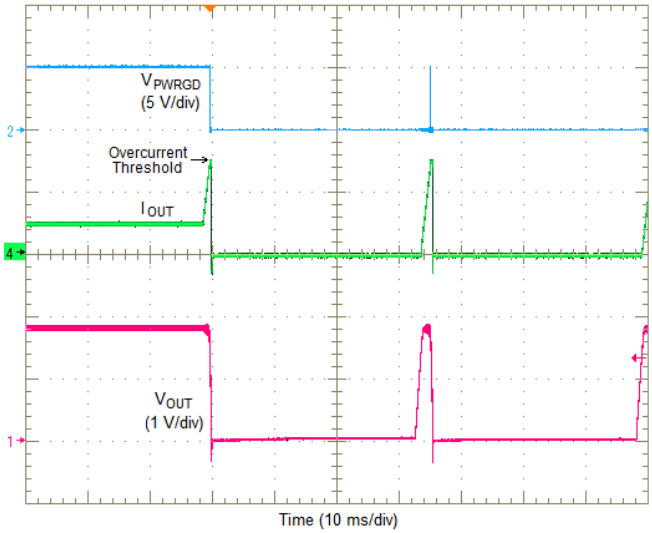

Figure 30. Overcurrent Limiting (Hiccup)

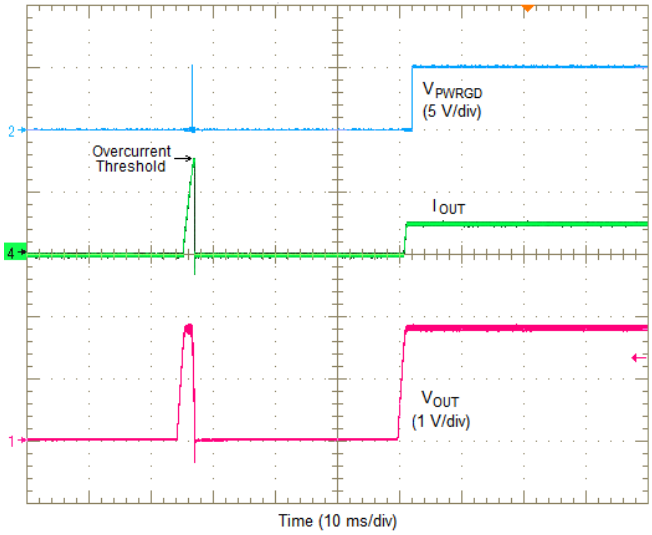

Figure 31. Removal of Overcurrent (Hiccup)

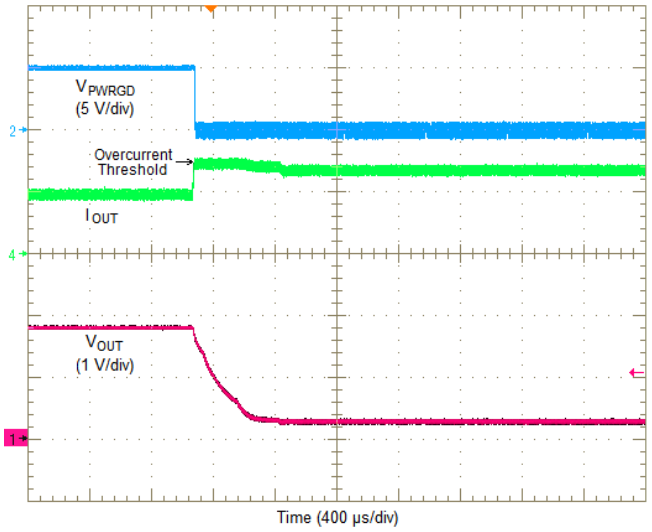

Figure 32. Overcurrent Limiting (Cycle-by-Cycle)

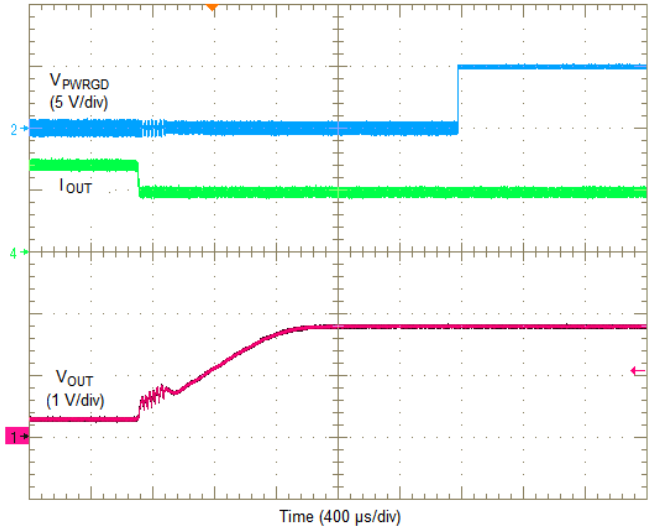

Figure 33. Removal of Overcurrent (Cycle-by-Cycle)

10.20 Synchronization (CLK)

An internal phase locked loop (PLL) has been implemented to allow synchronization between 200 kHz and 1200 kHz, and to easily switch from RT mode to CLK mode. To implement the synchronization feature, connect a square wave clock signal to the RT/CLK pin with a duty cycle between 20% to 80%. The clock signal amplitude must transition lower than 0.5 V and higher than 2.0 V. The start of the switching cycle is synchronized to the falling edge of RT/CLK pin. In applications where both RT mode and CLK mode are needed, the device can be configured as shown in Figure 34.

Before the external clock is present, the device works in RT mode and the switching frequency is set by RT resistor. When the external clock is present, the CLK mode overrides the RT mode. The first time the CLK pin is pulled above the RT/CLK high threshold (2.0 V), the device switches from RT mode to CLK mode and the RT/CLK pin becomes high impedance as the PLL starts to lock onto the frequency of the external clock. It is not recommended to switch from CLK mode back to RT mode because the internal switching frequency drops to 100 kHz first before returning to the switching frequency set by the RT resistor (R_{RT}).

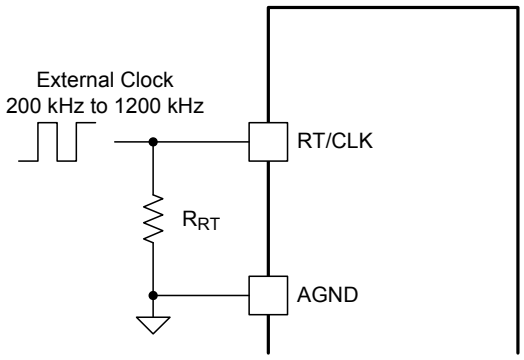

Figure 34. RT/CLK Configuration

The switching frequency must be selected based on the output voltage of the device being synchronized. Table 7 shows the allowable frequencies for a given range of output voltages. The allowable switching frequency changes based on the maximum output current (I_{OUT}) of an application. The table shows the V_{OUT} range when I_{OUT} ≤ 7 A, 6 A, and 5 A. For the most efficient solution, always synchronize to the lowest allowable frequency. For example, an application requires synchronizing three LMZ31707 devices with output voltages of 1.0 V, 1.2 V, and 1.8 V, all powered from PVIN = 12 V. Table 7 shows that all three output voltages should be synchronized to 300 kHz.

Table 7. Allowable Switching Frequency versus Output Voltage

SWITCHING FREQUENCY (kHz)	PVIN = 12 V			PVIN = 5 V		
	V_{OUT} RANGE (V)			V_{OUT} RANGE (V)		
	I_{OUT} ≤ 7 A	I_{OUT} ≤ 6 A	I_{OUT} ≤ 5 A	I_{OUT} ≤ 7 A	I_{OUT} ≤ 6 A	I_{OUT} ≤ 5 A
200	0.6 - 1.2	0.6 - 1.5	0.6 - 1.9	0.6 - 4.3	0.6 - 4.3	0.6 - 4.3
300	0.8 - 1.9	0.8 - 2.6	0.8 - 3.5	0.6 - 4.3	0.6 - 4.3	0.6 - 4.3
400	1.1 - 2.7	1.1 - 4.1	1.1 - 5.5	0.6 - 4.3	0.6 - 4.3	0.6 - 4.3
500	1.4 - 3.9	1.4 - 5.5	1.4 - 5.5	0.6 - 4.3	0.6 - 4.3	0.6 - 4.3
600	1.6 - 5.5	1.6 - 5.5	1.6 - 5.5	0.9 - 4.2	0.6 - 4.2	0.9 - 4.2
700	1.9 - 5.5	1.8 - 5.5	1.8 - 5.5	0.9 - 4.1	0.9 - 4.1	1.0 - 4.1
800	2.1 - 5.5	2.1 - 5.5	2.1 - 5.5	1.2 - 4.0	1.0 - 4.0	1.0 - 4.0
900	2.4 - 5.5	2.4 - 5.5	2.4 - 5.5	1.2 - 3.9	1.1 - 3.9	1.1 - 3.9
1000	2.7 - 5.5	2.7 - 5.5	2.7 - 5.5	1.2 - 3.8	1.2 - 3.8	1.2 - 3.8
1100	2.9 - 5.5	2.9 - 5.5	2.9 - 5.5	1.5 - 3.7	1.4 - 3.7	1.4 - 3.7
1200	3.2 - 5.5	3.2 - 5.5	3.2 - 5.5	1.5 - 3.6	1.5 - 3.6	1.5 - 3.6

Copyright © 2013–2020, Texas Instruments Incorporated

10.21 Sequencing (SS/TR)

Many of the common power supply sequencing methods can be implemented using the SS/TR, INH and PWRGD pins. The sequential method is illustrated in Figure 35 using two LMZ31707 devices. The PWRGD pin of the first device is coupled to the INH pin of the second device which enables the second power supply once the primary supply reaches regulation. Figure 36 shows sequential turnon waveforms of two LMZ31707 devices.

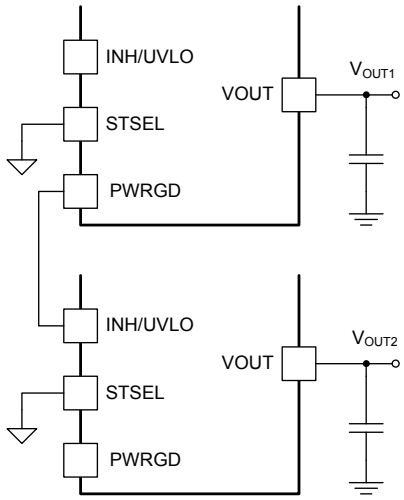

Figure 35. Sequencing Schematic

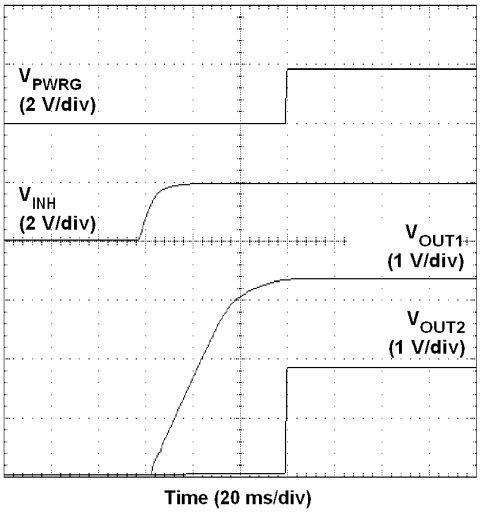

Figure 36. Sequencing Waveforms

Simultaneous power supply sequencing can be implemented by connecting the resistor network of R1 and R2 shown in Figure 37 to the output of the power supply that needs to be tracked or to another voltage reference source. The tracking voltage must exceed 750 mV before V_{OUT2} reaches its set-point voltage. The PWRGD output of the V_{OUT2} device can remain low if the tracking voltage does not exceed 1.4 V.Figure 38 shows simultaneous turnon waveforms of two LMZ31707 devices. Use Equation 3 and Equation 4 to calculate the values of R1 and R2.

$$R1 = \frac{(V_{OUT2} \times 12.6)}{0.6} \ (k\Omega) \quad (3)$$

$$R2 = \frac{0.6 \times R1}{(V_{OUT2} - 0.6)} \ (k\Omega) \quad (4)$$

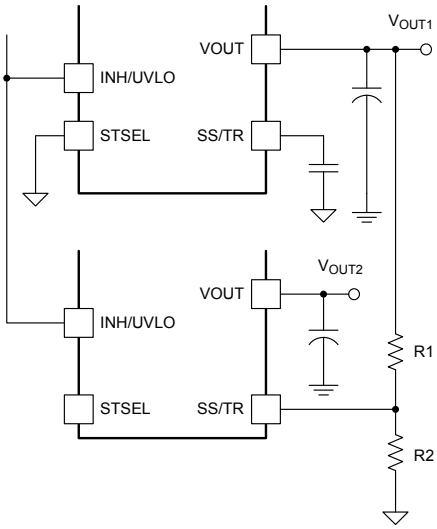

Figure 37. Simultaneous Tracking Schematic

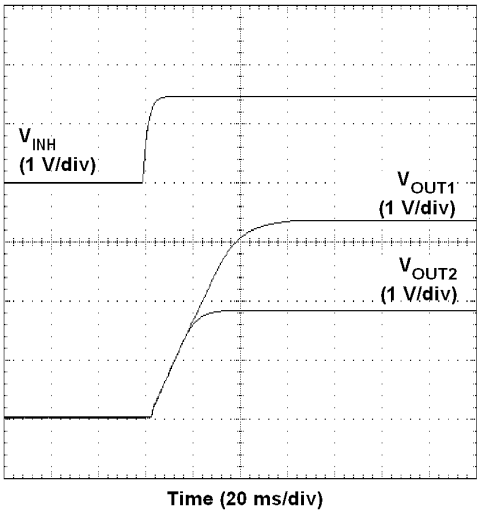

Figure 38. Simultaneous Tracking Waveforms

10.22 Programmable Undervoltage Lockout (UVLO)

The LMZ31707 implements internal UVLO circuitry on the VIN pin. The device is disabled when the VIN pin voltage falls below the internal VIN UVLO threshold. The internal VIN UVLO rising threshold is 4.5 V (max) with a typical hysteresis of 150 mV.

If an application requires either a higher UVLO threshold on the VIN pin or a higher UVLO threshold for a combined VIN and PVIN, then the UVLO pin can be configured as shown in Figure 39 or Figure 40. Table 8 lists standard values for R_{UVLO1} and R_{UVLO2} to adjust the VIN UVLO voltage up.

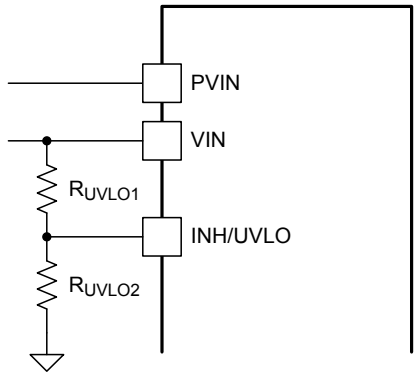

Figure 39. Adjustable VIN UVLO

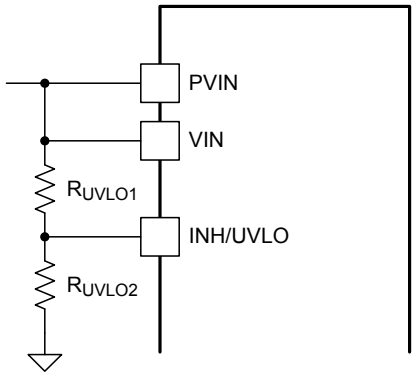

Figure 40. Adjustable VIN and PVIN Undervoltage Lockout

Table 8. Standard Resistor values for Adjusting VIN UVLO

VIN UVLO (V)	5.0	5.5	6.0	6.5	7.0	7.5	8.0	8.5	9.0	9.5	10.0
R_{UVLO1} (kΩ)	68.1	68.1	68.1	68.1	68.1	68.1	68.1	68.1	68.1	68.1	68.1
R_{UVLO2} (kΩ)	21.5	18.7	16.9	15.4	14.0	13.0	12.1	11.3	10.5	9.76	9.31
Hysteresis (mV)	400	415	430	450	465	480	500	515	530	550	565

For a split rail application, if a secondary UVLO on PVIN is required, VIN must be ≥ 4.5 V. Figure 41 shows the PVIN UVLO configuration. Use Table 9 to select R_{UVLO1} and R_{UVLO2} for PVIN. If PVIN UVLO is set for less than 3.5 V, a 5.1-V zener diode should be added to clamp the voltage on the UVLO pin below 6 V.

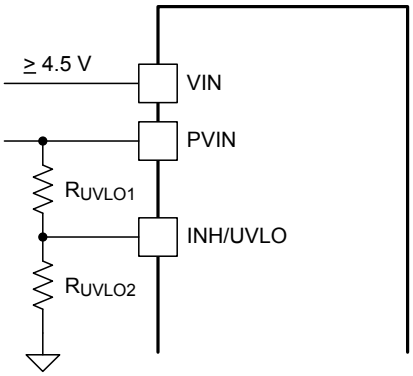

Figure 41. Adjustable PVIN Undervoltage Lockout, (VIN ≥ 4.5 V)

Table 9. Standard Resistor Values for Adjusting PVIN UVLO, (VIN ≥ 4.5 V)

PVIN UVLO (V)	2.9	3.0	3.5	4.0	4.5	
R_{UVLO1} (kΩ)	68.1	68.1	68.1	68.1	68.1	For higher PVIN UVLO voltages, see Table 8 for resistor values
R_{UVLO2} (kΩ)	47.5	44.2	34.8	28.7	24.3	
Hysteresis (mV)	330	335	350	365	385	

Copyright © 2013–2020, Texas Instruments Incorporated

10.23 Layout Considerations

To achieve optimal electrical and thermal performance, an optimized PCB layout is required. Figure 42 through Figure 45 shows a typical PCB layout. Some considerations for an optimized layout are:

- Use large copper areas for power planes (PVIN, V_{OUT}, and PGND) to minimize conduction loss and thermal stress.
- Place ceramic input and output capacitors close to the device pins to minimize high frequency noise.
- Locate additional output capacitors between the ceramic capacitor and the load.
- Keep AGND and PGND separate from one another.
- Place R_{SET}, R_{RT}, and C_{SS} as close as possible to their respective pins.
- Use multiple vias to connect the power planes to internal layers.

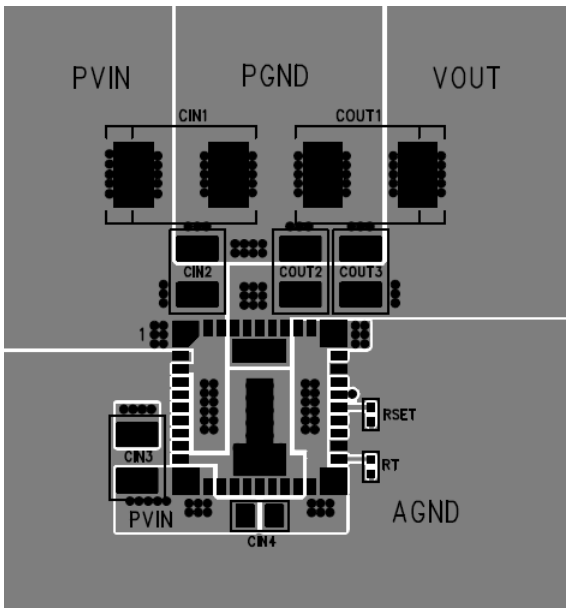

Figure 42. Typical Top-Layer Layout

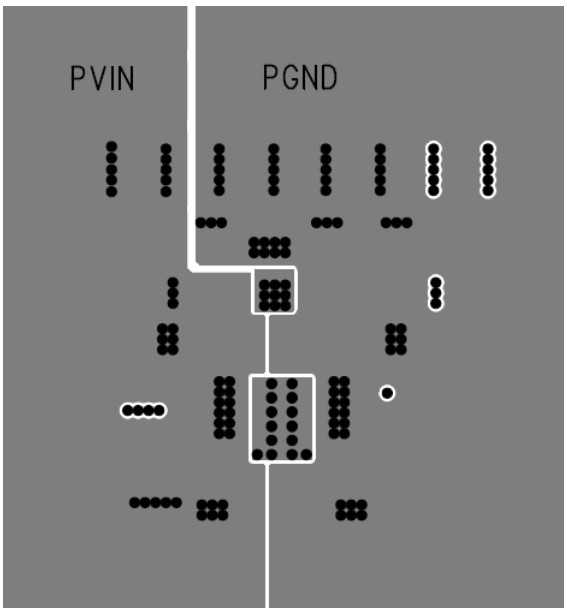

Figure 43. Typical Layer-2 Layout

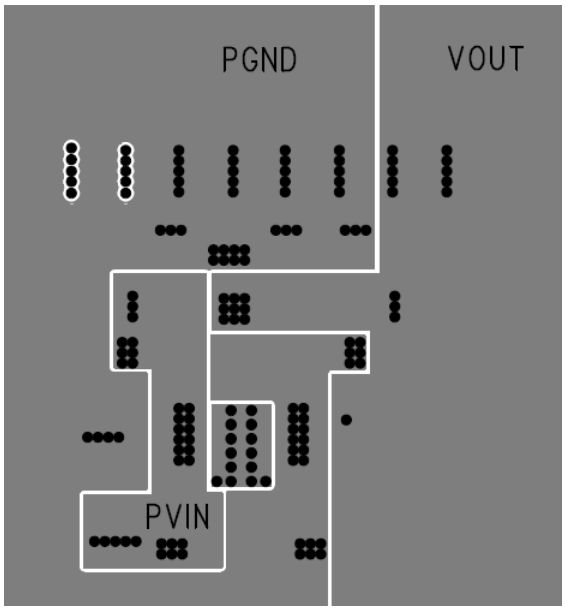

Figure 44. Typical Layer-3 Layout

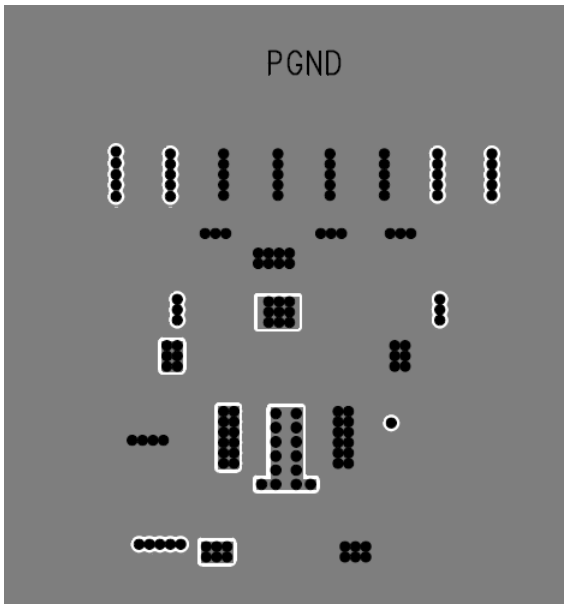

Figure 45. Typical Bottom-Layer Layout

10.24 EMI

The LMZ31707 is compliant with EN55022 Class B radiated emissions. Figure 46 and Figure 47 show typical examples of radiated emissions plots for the LMZ31707 operating from 5 V and 12 V, respectively. Both graphs include the plots of the antenna in the horizontal and vertical positions.

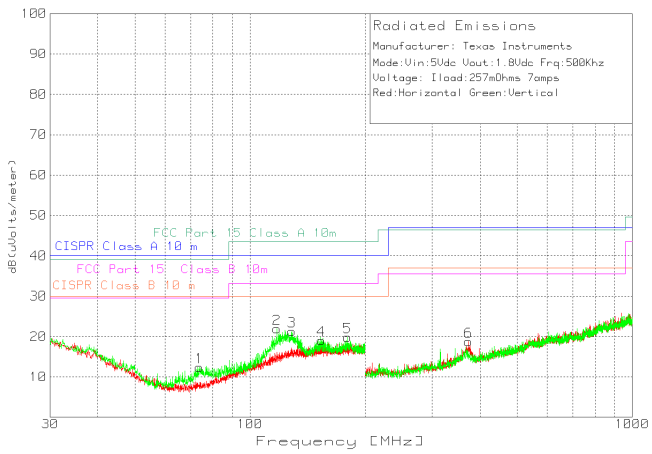

Figure 46. Radiated Emissions 5-V Input, 1.8-V Output, 7-A Load (EN55022 Class B)

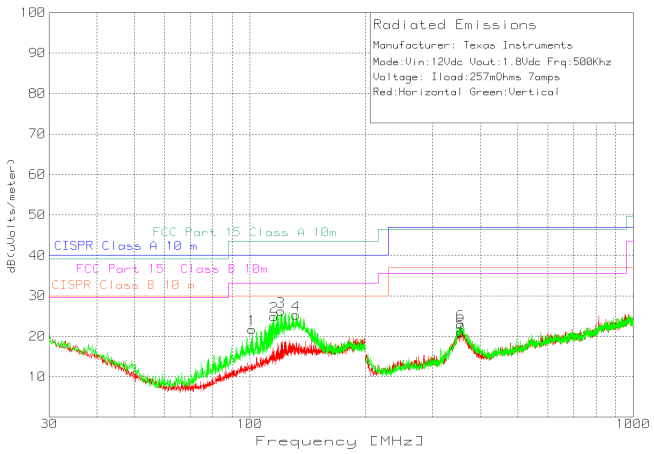

Figure 47. Radiated Emissions 12-V Input, 1.8-V Output, 7-A Load (EN55022 Class B)

Copyright © 2013–2020, Texas Instruments Incorporated

11 Device and Documentation Support

11.1 Device Support

11.1.1 Development Support

11.1.1.1 Custom Design With WEBENCH® Tools

Click here to create a custom design using the LMZ31707 device with the WEBENCH® Power Designer.

1. Start by entering the input voltage (V_{IN}), output voltage (V_{OUT}), and output current (I_{OUT}) requirements.
2. Optimize the design for key parameters such as efficiency, footprint, and cost using the optimizer dial.
3. Compare the generated design with other possible solutions from Texas Instruments.

The WEBENCH Power Designer provides a customized schematic along with a list of materials with real-time pricing and component availability.

In most cases, these actions are available:

- Run electrical simulations to see important waveforms and circuit performance
- Run thermal simulations to understand board thermal performance
- Export customized schematic and layout into popular CAD formats
- Print PDF reports for the design, and share the design with colleagues

Get more information about WEBENCH tools at www.ti.com/WEBENCH.

11.2 Documentation Support

11.2.1 Related Documentation

For related documentation see the following:

Soldering Requirements for BQFN Packages Application Report

11.3 Receiving Notification of Documentation Updates

To receive notification of documentation updates, navigate to the device product folder on ti.com. In the upper right corner, click on *Alert me* to register and receive a weekly digest of any product information that has changed. For change details, review the revision history included in any revised document.

11.4 Support Resources

TI E2E™ support forums are an engineer's go-to source for fast, verified answers and design help — straight from the experts. Search existing answers or ask your own question to get the quick design help you need.

Linked content is provided "AS IS" by the respective contributors. They do not constitute TI specifications and do not necessarily reflect TI's views; see TI's Terms of Use.

11.5 Trademarks

Eco-mode, E2E are trademarks of Texas Instruments.
WEBENCH, SIMPLE SWITCHER are registered trademarks of Texas Instruments.
All other trademarks are the property of their respective owners.

11.6 Electrostatic Discharge Caution

This integrated circuit can be damaged by ESD. Texas Instruments recommends that all integrated circuits be handled with appropriate precautions. Failure to observe proper handling and installation procedures can cause damage.

ESD damage can range from subtle performance degradation to complete device failure. Precision integrated circuits may be more susceptible to damage because very small parametric changes could cause the device not to meet its published specifications.

11.7 Glossary

SLYZ022 — *TI Glossary*.

This glossary lists and explains terms, acronyms, and definitions.

12 Mechanical, Packaging, and Orderable Information

The following pages include mechanical, packaging, and orderable information. This information is the most current data available for the designated devices. This data is subject to change without notice and revision of this document. For browser-based versions of this data sheet, refer to the left-hand navigation.

12.1 Tape and Reel Information

REEL DIMENSIONS

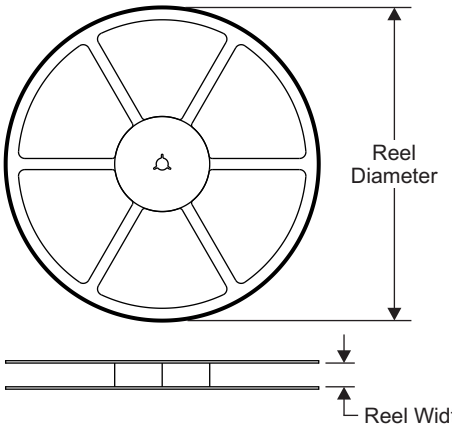

TAPE DIMENSIONS

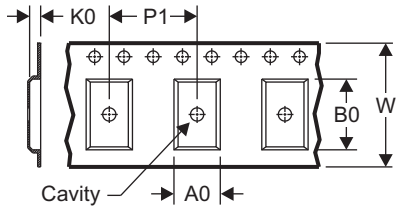

A0	Dimension designed to accommodate the component width
B0	Dimension designed to accommodate the component length
K0	Dimension designed to accommodate the component thickness
W	Overall width of the carrier tape
P1	Pitch between successive cavity centers

QUADRANT ASSIGNMENTS FOR PIN 1 ORIENTATION IN TAPE

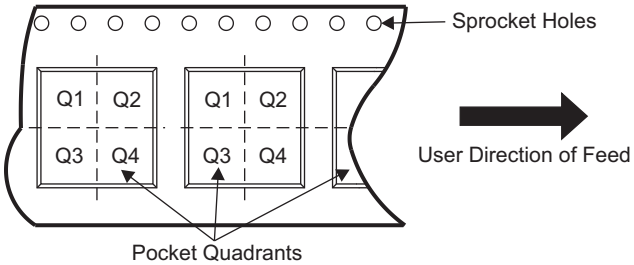

Device	Package Type	Package Drawing	Pins	SPQ	Reel Diameter (mm)	Reel Width W1 (mm)	A0 (mm)	B0 (mm)	K0 (mm)	P1 (mm)	W (mm)	Pin1 Quadrant
LMZ31707RVQR	B3QFN	RVQ	42	500	330.0	24.4	10.35	10.35	4.6	16.0	24.0	Q2
LMZ31707RVQT	B3QFN	RVQ	42	250	330.0	24.4	10.35	10.35	4.6	16.0	24.0	Q2

Copyright © 2013–2020, Texas Instruments Incorporated

TAPE AND REEL BOX DIMENSIONS

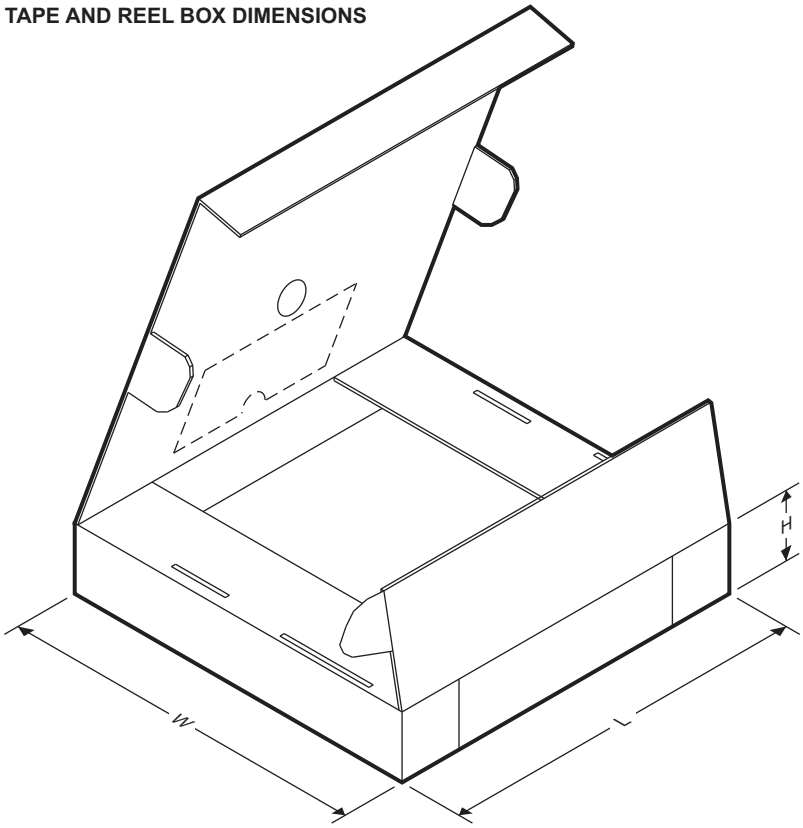

Device	Package Type	Package Drawing	Pins	SPQ	Length (mm)	Width (mm)	Height (mm)
LMZ31707RVQR	B3QFN	RVQ	42	500	383.0	353.0	58.0
LMZ31707RVQT	B3QFN	RVQ	42	250	383.0	353.0	58.0

PACKAGING INFORMATION

Orderable part number	Status (1)	Material type (2)	Package | Pins	Package qty | Carrier	RoHS (3)	Lead finish/ Ball material (4)	MSL rating/ Peak reflow (5)	Op temp (°C)	Part marking (6)
LMZ31707RVQR	Active	Production	B3QFN (RVQ) | 42	500 | LARGE T&R	Exempt	NIPDAU	Level-3-245C-168 HR	-40 to 85	(54020, LMZ31707)
LMZ31707RVQR.A	Active	Production	B3QFN (RVQ) | 42	500 | LARGE T&R	Exempt	NIPDAU	Level-3-245C-168 HR	-40 to 85	(54020, LMZ31707)
LMZ31707RVQR.B	Active	Production	B3QFN (RVQ) | 42	500 | LARGE T&R	Exempt	NIPDAU	Level-3-245C-168 HR	-40 to 85	(54020, LMZ31707)
LMZ31707RVQT	Active	Production	B3QFN (RVQ) | 42	250 | SMALL T&R	Exempt	NIPDAU	Level-3-245C-168 HR	-40 to 85	(54020, LMZ31707)
LMZ31707RVQT.A	Active	Production	B3QFN (RVQ) | 42	250 | SMALL T&R	Exempt	NIPDAU	Level-3-245C-168 HR	-40 to 85	(54020, LMZ31707)
LMZ31707RVQT.B	Active	Production	B3QFN (RVQ) | 42	250 | SMALL T&R	Exempt	NIPDAU	Level-3-245C-168 HR	-40 to 85	(54020, LMZ31707)
LMZ31707RVQTG4	Active	Production	B3QFN (RVQ) | 42	250 | SMALL T&R	Yes	NIPDAU	Level-3-245C-168 HR	-40 to 85	LMZ31707
LMZ31707RVQTG4.A	Active	Production	B3QFN (RVQ) | 42	250 | SMALL T&R	Yes	NIPDAU	Level-3-245C-168 HR	-40 to 85	LMZ31707
LMZ31707RVQTG4.B	Active	Production	B3QFN (RVQ) | 42	250 | SMALL T&R	Yes	NIPDAU	Level-3-245C-168 HR	-40 to 85	LMZ31707

(1) **Status:** For more details on status, see our product life cycle.

(2) **Material type:** When designated, preproduction parts are prototypes/experimental devices, and are not yet approved or released for full production. Testing and final process, including without limitation quality assurance, reliability performance testing, and/or process qualification, may not yet be complete, and this item is subject to further changes or possible discontinuation. If available for ordering, purchases will be subject to an additional waiver at checkout, and are intended for early internal evaluation purposes only. These items are sold without warranties of any kind.

(3) **RoHS values:** Yes, No, RoHS Exempt. See the TI RoHS Statement for additional information and value definition.

(4) **Lead finish/Ball material:** Parts may have multiple material finish options. Finish options are separated by a vertical ruled line. Lead finish/Ball material values may wrap to two lines if the finish value exceeds the maximum column width.

(5) **MSL rating/Peak reflow:** The moisture sensitivity level ratings and peak solder (reflow) temperatures. In the event that a part has multiple moisture sensitivity ratings, only the lowest level per JEDEC standards is shown. Refer to the shipping label for the actual reflow temperature that will be used to mount the part to the printed circuit board.

(6) **Part marking:** There may be an additional marking, which relates to the logo, the lot trace code information, or the environmental category of the part.

Multiple part markings will be inside parentheses. Only one part marking contained in parentheses and separated by a "~" will appear on a part. If a line is indented then it is a continuation of the previous line and the two combined represent the entire part marking for that device.

Important Information and Disclaimer: The information provided on this page represents TI's knowledge and belief as of the date that it is provided. TI bases its knowledge and belief on information provided by third parties, and makes no representation or warranty as to the accuracy of such information. Efforts are underway to better integrate information from third parties. TI has taken and continues to take reasonable steps to provide representative

and accurate information but may not have conducted destructive testing or chemical analysis on incoming materials and chemicals. TI and TI suppliers consider certain information to be proprietary, and thus CAS numbers and other limited information may not be available for release.

In no event shall TI's liability arising out of such information exceed the total purchase price of the TI part(s) at issue in this document sold by TI to Customer on an annual basis.

TAPE AND REEL INFORMATION

REEL DIMENSIONS

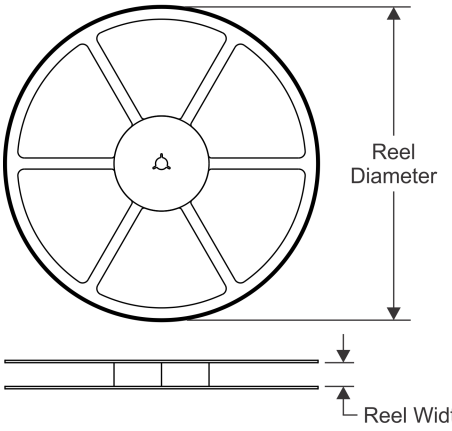

TAPE DIMENSIONS

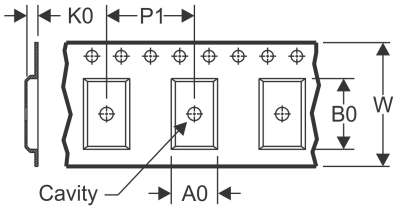

A0	Dimension designed to accommodate the component width
B0	Dimension designed to accommodate the component length
K0	Dimension designed to accommodate the component thickness
W	Overall width of the carrier tape
P1	Pitch between successive cavity centers

QUADRANT ASSIGNMENTS FOR PIN 1 ORIENTATION IN TAPE

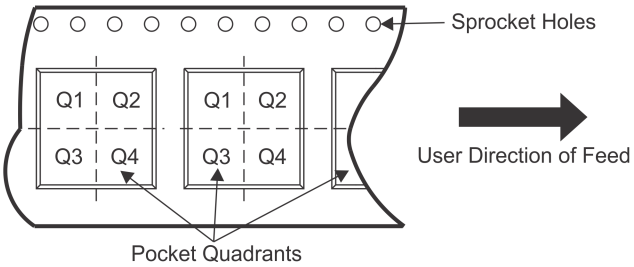

*All dimensions are nominal

Device	Package Type	Package Drawing	Pins	SPQ	Reel Diameter (mm)	Reel Width W1 (mm)	A0 (mm)	B0 (mm)	K0 (mm)	P1 (mm)	W (mm)	Pin1 Quadrant
LMZ31707RVQR	B3QFN	RVQ	42	500	330.0	24.4	10.35	10.35	4.6	16.0	24.0	Q2
LMZ31707RVQT	B3QFN	RVQ	42	250	330.0	24.4	10.35	10.35	4.6	16.0	24.0	Q2

TAPE AND REEL BOX DIMENSIONS

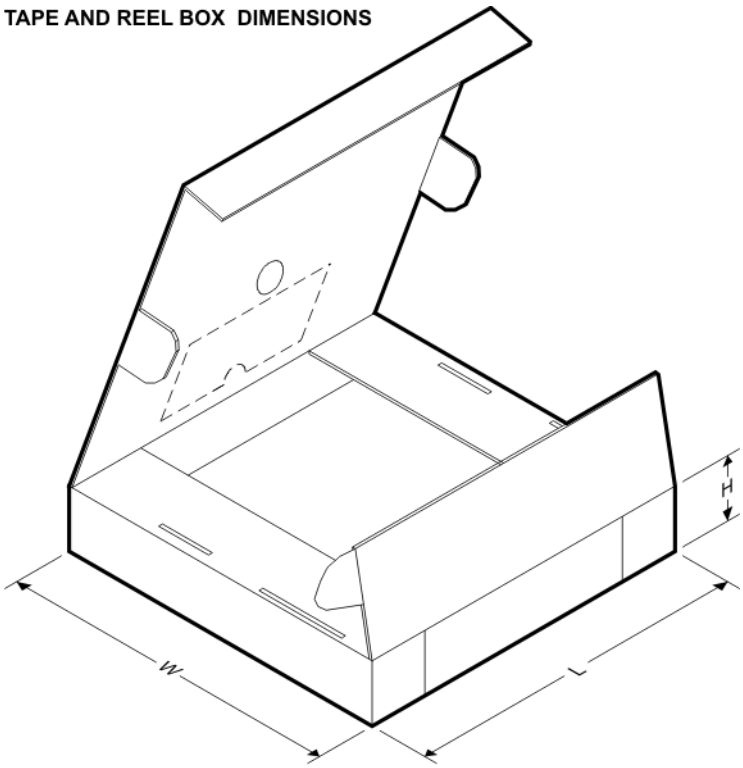

*All dimensions are nominal

Device	Package Type	Package Drawing	Pins	SPQ	Length (mm)	Width (mm)	Height (mm)
LMZ31707RVQR	B3QFN	RVQ	42	500	383.0	353.0	58.0
LMZ31707RVQT	B3QFN	RVQ	42	250	383.0	353.0	58.0

RVQ0042A

B3QFN - 4.4 mm max height

SUPER THICK QUAD FLATPACK - NO LEAD

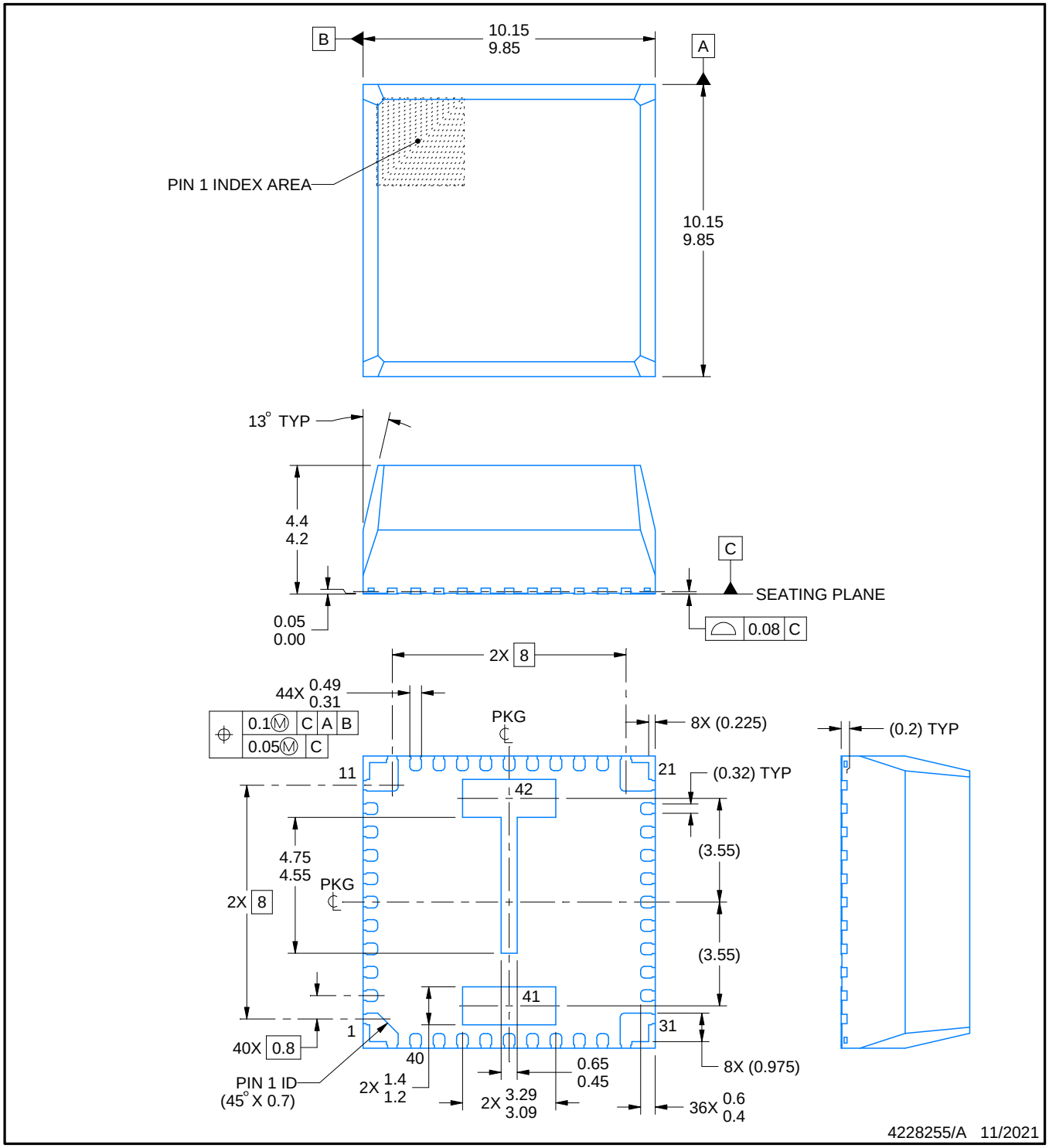

NOTES:

1. All linear dimensions are in millimeters. Any dimensions in parenthesis are for reference only. Dimensioning and tolerancing per ASME Y14.5M.
2. This drawing is subject to change without notice.
3. The package thermal pad must be soldered to the printed circuit board for thermal and mechanical performance.

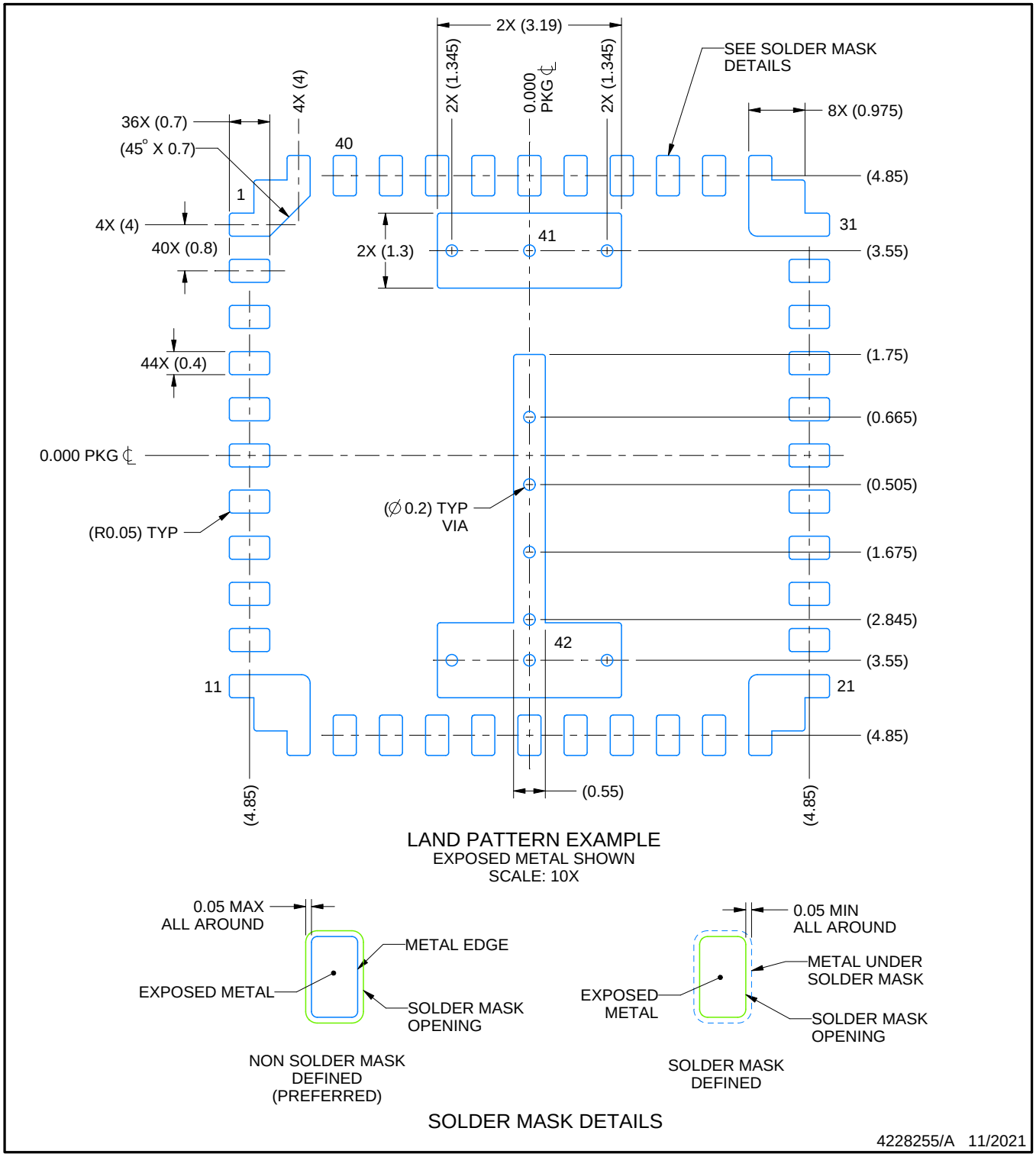

NOTES: (continued)

4. This package is designed to be soldered to a thermal pad on the board. For more information, see Texas Instruments literature number SLUA271 (www.ti.com/lit/slua271).
5. Vias are optional depending on application, refer to device data sheet. If any vias are implemented, refer to their locations shown on this view. It is recommended that vias under paste be filled, plugged or tented.

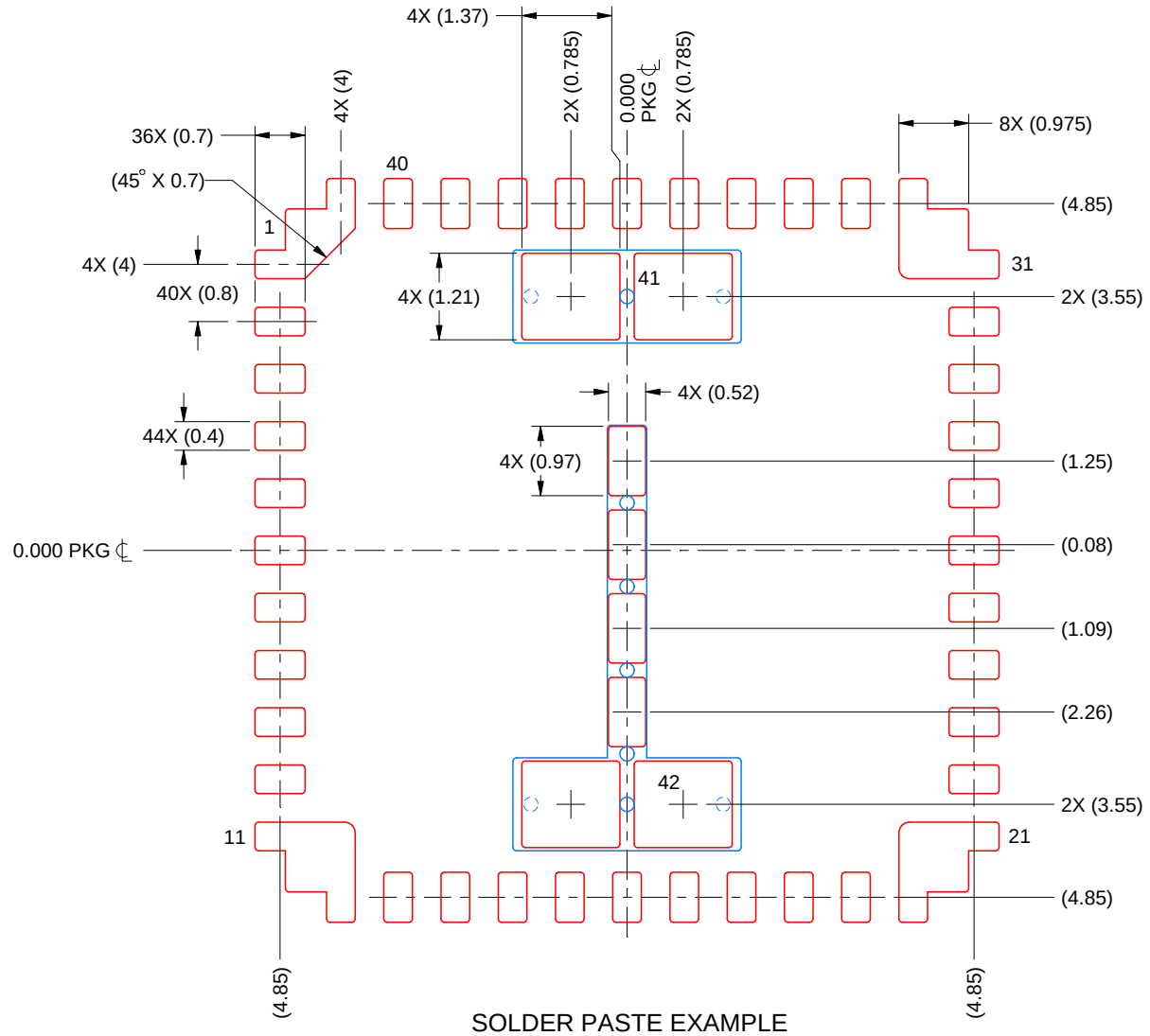

SOLDER PASTE EXAMPLE
BASED ON 0.1 mm STENCIL THICKNESS
SCALE: 10X

PRINTED SOLDER COVERAGE BY AREA UNDER PACKAGE
PAD 41: 81%
PAD 42: 80%

4228255/A 11/2021

NOTES: (continued)

6. Laser cutting apertures with trapezoidal walls and rounded corners may offer better paste release. IPC-7525 may have alternate design recommendations.

IMPORTANT NOTICE AND DISCLAIMER

TI PROVIDES TECHNICAL AND RELIABILITY DATA (INCLUDING DATA SHEETS), DESIGN RESOURCES (INCLUDING REFERENCE DESIGNS), APPLICATION OR OTHER DESIGN ADVICE, WEB TOOLS, SAFETY INFORMATION, AND OTHER RESOURCES “AS IS” AND WITH ALL FAULTS, AND DISCLAIMS ALL WARRANTIES, EXPRESS AND IMPLIED, INCLUDING WITHOUT LIMITATION ANY IMPLIED WARRANTIES OF MERCHANTABILITY, FITNESS FOR A PARTICULAR PURPOSE OR NON-INFRINGEMENT OF THIRD PARTY INTELLECTUAL PROPERTY RIGHTS.

These resources are intended for skilled developers designing with TI products. You are solely responsible for (1) selecting the appropriate TI products for your application, (2) designing, validating and testing your application, and (3) ensuring your application meets applicable standards, and any other safety, security, regulatory or other requirements.

These resources are subject to change without notice. TI grants you permission to use these resources only for development of an application that uses the TI products described in the resource. Other reproduction and display of these resources is prohibited. No license is granted to any other TI intellectual property right or to any third party intellectual property right. TI disclaims responsibility for, and you will fully indemnify TI and its representatives against, any claims, damages, costs, losses, and liabilities arising out of your use of these resources.

TI’s products are provided subject to TI’s Terms of Sale or other applicable terms available either on ti.com or provided in conjunction with such TI products. TI’s provision of these resources does not expand or otherwise alter TI’s applicable warranties or warranty disclaimers for TI products.

TI objects to and rejects any additional or different terms you may have proposed.

Mailing Address: Texas Instruments, Post Office Box 655303, Dallas, Texas 75265
Copyright © 2025, Texas Instruments Incorporated