LP2998/LP2998-Q1 DDR Termination Regulator

1 Features

- AEC-Q100 Test Guidance with the following results (SO PowerPAD-8):
  - Device HBM ESD Classification Level H1C
  - Junction Temperature Range –40°C to 125°C
- 1.35 V Minimum V_{DDQ}
- Source and Sink Current
- Low Output Voltage Offset
- No External Resistors Required
- Linear Topology
- Suspend to Ram (STR) Functionality
- Low External Component Count
- Thermal Shutdown

2 Applications

- DDR1, DDR2, DDR3, and DDR3L Termination Voltage
- Automotive Infotainment
- FPGA
- Industrial/Medical PC
- SSTL-18, SSTL-2, and SSTL-3 Termination
- HSTL Termination

3 Description

The LP2998 linear regulator is designed to meet JEDEC SSTL-2 and JEDEC SSTL-18 specifications for termination of DDR-SDRAM and DDR2 memory. The device also supports DDR3 and DDR3L VTT bus termination with V_{DDQ} min of 1.35 V. The device contains a high-speed operational amplifier to provide excellent response to load transients. The output stage prevents shoot through while delivering 1.5 A continuous current and transient peaks up to 3 A in the application as required for DDR-SDRAM termination. The LP2998 also incorporates a VSENSE pin to provide superior load regulation and a V_{REF} output as a reference for the chipset and DIMMs.

An additional feature found on the LP2998 is an active low shutdown ($\overline{SD}$) pin that provides Suspend To RAM (STR) functionality. When $\overline{SD}$ is pulled low the V_{TT} output will tri-state providing a high impedance output, but, V_{REF} will remain active. A power savings advantage can be obtained in this mode through lower quiescent current.

Device Information(1)

PART NUMBER	PACKAGE	BODY SIZE (NOM)
LP2998	SO PowerPAD™ (8)	4.89 mm x 3.90 mm
LP2998	SOIC (8)	4.90 mm x 3.91 mm
LP2998-Q1	SO PowerPAD™ (8)	4.89 mm x 3.90 mm

(1) For all available packages, see the orderable addendum at the end of the datasheet.

4 Simplified Schematic

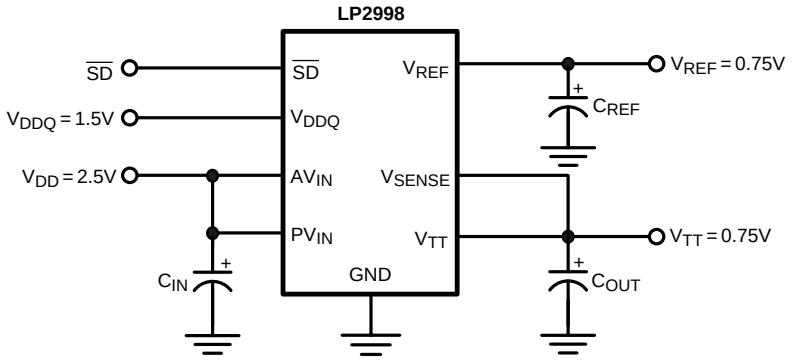

An IMPORTANT NOTICE at the end of this data sheet addresses availability, warranty, changes, use in safety-critical applications, intellectual property matters and other important disclaimers. PRODUCTION DATA.

Table of Contents

1 Features ... 1
2 Applications ... 1
3 Description ... 1
4 Simplified Schematic ... 1
5 Revision History ... 2
6 Pin Configuration and Functions ... 3
6.1 Pin Descriptions ... 3
7 Specifications ... 5
7.1 Absolute Maximum Ratings ... 5
7.2 Handling Ratings: LP2998 ... 5
7.3 Handling Ratings: LP2998-Q1 ... 5
7.4 Recommended Operating Conditions ... 5
7.5 Thermal Information ... 5
7.6 Electrical Characteristics ... 6
7.7 Typical Characteristics ... 8
8 Detailed Description ... 11
8.1 Overview ... 11
8.2 Functional Block Diagram ... 11
8.3 Feature Description ... 11
8.4 Device Functional Modes ... 11
9 Application and Implementation ... 13
9.1 Application Information ... 13
9.2 Typical Application ... 15
10 Power Supply Recommendations ... 20
11 Layout ... 20
11.1 Layout Guidelines ... 20
11.2 Layout Examples ... 21
12 Device and Documentation Support ... 22
12.1 Related Links ... 22
12.2 Trademarks ... 22
12.3 Electrostatic Discharge Caution ... 22
12.4 Glossary ... 22
13 Mechanical, Packaging, and Orderable Information ... 22

5 Revision History

NOTE: Page numbers for previous revisions may differ from page numbers in the current version.

Changes from Revision J (December 2013) to Revision K	Page
• Added DDR3 support throughout datasheet	1
• Changed formatting to match new TI datasheet guidelines; added Device Information and Handling Ratings tables, Power Supply, Layout Examples, and Device and Documentation Support sections; reformatted Detailed Description and Application and Implementation sections.	1
• Changed Electrical Char table condition statement	6
• Changed Electrical Char table condition statement	7

Changes from Revision I (April 2013) to Revision J	Page
• Added AEC-Q100 Test Guidance	1
• Changed layout of National Data Sheet to TI format	20

Copyright © 2007–2014, Texas Instruments Incorporated

6 Pin Configuration and Functions

SO PowerPAD
8-LEAD DDA
TOP VIEW

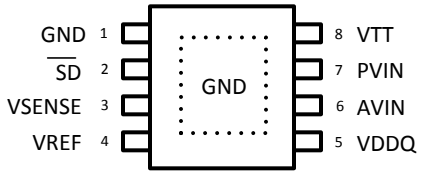

SOIC
8-LEAD D
TOP VIEW

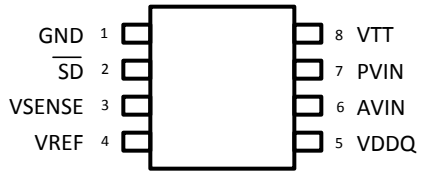

Pin Functions

PIN		
NUMBER	**TYPE**	**DESCRIPTION**
1	GND	Ground
2	$\overline{SD}$	Shutdown
3	VSENSE	Feedback pin for regulating V_{TT}.
4	VREF	Buffered internal reference voltage of $V_{DDQ}/2$
5	VDDQ	Input for internal reference equal to $V_{DDQ}/2$
6	AVIN	Analog input pin
7	PVIN	Power input pin
8	VTT	Output voltage for connection to termination resistors
	EP	Exposed pad thermal connection. Connect to Ground.

6.1 Pin Descriptions

AVIN AND PVIN	AVIN and PVIN are the input supply pins for the LP2998. AVIN is used to supply all the internal control circuitry. PVIN, however, is used exclusively to provide the rail voltage for the output stage used to create VTT. These pins have the capability to work off separate supplies depending on the application. Higher voltages on PVIN will increase the maximum continuous output current because of output RDSON limitations at voltages close to VTT. The disadvantage of high values of PVIN is that the internal power loss will also increase, thermally limiting the design. For SSTL-2 applications, a good compromise would be to connect the AVIN and PVIN directly together at 2.5 V. This eliminates the need for bypassing the two supply pins separately. The only limitation on input voltage selection is that PVIN must be equal to or lower than AVIN. It is recommended to connect PVIN to voltage rails equal to or less than 3.3 V to prevent the thermal limit from tripping because of excessive internal power dissipation. If the junction temperature exceeds the thermal shutdown than the part will enter a shutdown state identical to the manual shutdown where V_{TT} is tri-stated and V_{REF} remains active.
VDDQ	VDDQ is the input used to create the internal reference voltage for regulating V_{TT}. The reference voltage is generated from a resistor divider of two internal 50 kΩ resistors. This ensures that V_{TT} will track VDDQ / 2 precisely. The optimal implementation of VDDQ is as a remote sense. This can be achieved by connecting VDDQ directly to the 2.5 V rail at the DIMM instead of AVIN and PVIN. This ensures that the reference voltage tracks the DDR memory rails precisely without a large voltage drop from the power lines. For SSTL-2 applications VDDQ will be a 2.5 V signal, which will create a 1.25 V termination voltage at V_{TT} (See *Electrical Characteristics* Table for exact values of V_{TT} over temperature).

Copyright © 2007–2014, Texas Instruments Incorporated

Pin Descriptions (continued)

V_{SENSE}	The purpose of the sense pin is to provide improved remote load regulation. In most motherboard applications the termination resistors will connect to V_{TT} in a long plane. If the output voltage was regulated only at the output of the LP2998 then the long trace will cause a significant IR drop resulting in a termination voltage lower at one end of the bus than the other. The V_{SENSE} pin can be used to improve this performance, by connecting it to the middle of the bus. This will provide a better distribution across the entire termination bus. If remote load regulation is not used then the V_{SENSE} pin must still be connected to V_{TT}. Care should be taken when a long V_{SENSE} trace is implemented in close proximity to the memory. Noise pickup in the V_{SENSE} trace can cause problems with precise regulation of V_{TT}. A small 0.1 uF ceramic capacitor placed next to the V_{SENSE} pin can help filter any high frequency signals and preventing errors.
SHUTDOWN	The LP2998 contains an active low shutdown pin that can be used to tri-state VTT. During shutdown V_{TT} should not be exposed to voltages that exceed AVIN. With the shutdown pin asserted low the quiescent current of the LP2998 will drop, however, V_{DDQ} will always maintain its constant impedance of 100 kΩ for generating the internal reference. Therefore, to calculate the total power loss in shutdown both currents need to be considered. For more information refer to the *Thermal Dissipation* section. The shutdown pin also has an internal pull-up current, therefore to turn the part on the shutdown pin can either be connected to AVIN or left open.
V_{REF}	V_{REF} provides the buffered output of the internal reference voltage VDDQ / 2. This output should be used to provide the reference voltage for the Northbridge chipset and memory. Since these inputs are typically an extremely high impedance, there should be little current drawn from V_{REF}. For improved performance, an output bypass capacitor can be used, located close to the pin, to help with noise. A ceramic capacitor in the range of 0.1 µF to 0.01 µF is recommended. This output remains active during the shutdown state and thermal shutdown events for the suspend to RAM functionality.
V_{TT}	V_{TT} is the regulated output that is used to terminate the bus resistors. It is capable of sinking and sourcing current while regulating the output precisely to VDDQ / 2. The LP2998 is designed to handle peak transient currents of up to ± 3 A with a fast transient response. The maximum continuous current is a function of V_{IN} and can be viewed in the *Typical Characteristics* section. If a transient is expected to last above the maximum continuous current rating for a significant amount of time then the output capacitor should be sized large enough to prevent an excessive voltage drop. Despite the fact that the LP2998 is designed to handle large transient output currents it is not capable of handling these for long durations, under all conditions. The reason for this is the standard packages are not able to thermally dissipate the heat as a result of the internal power loss. If large currents are required for longer durations, then care should be taken to ensure that the maximum junction temperature is not exceeded. Proper thermal derating should always be used (please refer to the *Thermal Dissipation* section). If the junction temperature exceeds the thermal shutdown point than V_{TT} will tri-state until the part returns below the hysteretic trip-point.

Copyright © 2007–2014, Texas Instruments Incorporated

7 Specifications

7.1 Absolute Maximum Ratings (1)(2)

over operating free-air temperature range (unless otherwise noted)

	MIN	MAX	UNIT
AVIN to GND	−0.3	6	V
PVIN to GND	–0.3	AVIN	V
VDDQ (3)	−0.3	6	V
Junction temperature		150	°C
Lead temperature (soldering, 10 sec)		260	°C

(1) Stresses beyond those listed under absolute maximum ratings may cause permanent damage to the device. These are stress ratings only, and functional operation of the device at these or any other conditions beyond those indicated under recommended operating conditions is not implied. Exposure to absolute–maximum–rated conditions for extended periods may affect device reliability.
(2) If Military/Aerospace specified devices are required, please contact the Texas Instruments Sales Office/Distributors for availability and specifications.
(3) VDDQ voltage must be less than 2 x (AVIN - 1) or 6V, whichever is smaller.

7.2 Handling Ratings: LP2998

			MIN	MAX	UNIT
T_{stg}	Storage temperature range		−65	150	°C
$V_{(ESD)}$	Electrostatic discharge	Human body model (HBM), per ANSI/ESDA/JEDEC JS-001, all pins (1)	−1000	1000	V

(1) JEDEC document JEP155 states that 500-V HBM allows safe manufacturing with a standard ESD control process.

7.3 Handling Ratings: LP2998-Q1

			MIN	MAX	UNIT
T_{stg}	Storage temperature range		−65	150	°C
$V_{(ESD)}$	Electrostatic discharge	Human body model (HBM), per AEC Q100-002 (1)	−1000	1000	V

(1) AEC Q100-002 indicates HBM stressing is done in accordance with the ANSI/ESDA/JEDEC JS-001 specification. The LP2998-Q1 is rated at AEC-Q100 ESD HBM Classification Level H1C.

7.4 Recommended Operating Conditions

over operating free-air temperature range (unless otherwise noted)

	MIN	NOM	MAX	UNIT
Junction temperature (1)	–40		125	°C
AVIN to GND	2.2		5.5	V
PVIN supply voltage	0		AVIN	V
SD input voltage	0		AVIN	V

(1) At elevated temperatures, devices must be derated based on thermal resistance.

7.5 Thermal Information

THERMAL METRIC (1)		LP2998/LP2998-Q1	LP2998	UNIT
		SO PowerPAD	SOIC	
		8 PINS	8 PINS	
$R_{\theta JA}$	Junction-to-ambient thermal resistance	43	151	°C/W

(1) For more information about traditional and new thermal metrics, see the *IC Package Thermal Metrics* application report, SPRA953.

7.6 Electrical Characteristics

Typical limits tested at T_J = 25°C. Minimum and maximum limits apply over the full operating junction temperature range (T_J = –40°C to 125°C).[1] Unless otherwise specified, AVIN = PVIN = 2.5 V, VDDQ = 2.5 V.[2]

PARAMETER		TEST CONDITIONS	MIN	TYP	MAX	UNIT
V_{REF}	V_{REF} voltage (DDR I)	VIN = VDDQ = 2.3 V	1.135	1.158	1.185	V
		VIN = VDDQ = 2.5 V	1.235	1.258	1.285	
		VIN = VDDQ = 2.7 V	1.335	1.358	1.385	
	V_{REF} voltage (DDR II)	PVIN = VDDQ = 1.7 V	0.837	0.860	0.887	
		PVIN = VDDQ = 1.8 V	0.887	0.910	0.937	
		PVIN = VDDQ = 1.9 V	0.936	0.959	0.986	
	V_{REF} Voltage (DDR III)	PVIN = VDDQ = 1.35V	0.669	0.684	0.699	
		PVIN = VDDQ = 1.5V	0.743	0.758	0.773	
		PVIN = VDDQ = 1.6V	0.793	0.808	0.823	
Z_{VREF}	V_{REF} Output Impedance	I_{REF} = –30 to 30 µA		2.5		kΩ
V_{TT}	V_{TT} Output Voltage (DDR I) [3]	I_{OUT} = 0 A				V
		VIN = VDDQ = 2.3 V	1.120	1.159	1.190	
		VIN = VDDQ = 2.5 V	1.210	1.259	1.290	
		VIN = VDDQ = 2.7 V	1.320	1.359	1.390	
		I_{OUT} = ±1.5 A				
		VIN = VDDQ = 2.3 V	1.125	1.159	1.190	
		VIN = VDDQ = 2.5 V	1.225	1.259	1.290	
		VIN = VDDQ = 2.7 V	1.325	1.359	1.390	
	V_{TT} Output Voltage (DDR II) [3]	I_{OUT} = 0 A, AVIN = 2.5 V				V
		PVIN = VDDQ = 1.7 V	0.822	0.856	0.887	
		PVIN = VDDQ = 1.8 V	0.874	0.908	0.939	
		PVIN = VDDQ = 1.9 V	0.923	0.957	0.988	
		I_{OUT} = ±0.5A, AVIN = 2.5 V				
		PVIN = VDDQ = 1.7 V	0.820	0.856	0.890	
		PVIN = VDDQ = 1.8 V	0.870	0.908	0.940	
		PVIN = VDDQ = 1.9 V	0.920	0.957	0.990	
	V_{TT} Output Voltage (DDR III) [3]	I_{OUT} = 0A, AVIN = 2.5 V				V
		PVIN = VDDQ = 1.35V	0.656	0.677	0.698	
		PVIN = VDDQ = 1.5 V	0.731	0.752	0.773	
		PVIN = VDDQ = 1.6 V	0.781	0.802	0.823	
		I_{OUT} = 0.2 A, AVIN = 2.5V PVIN = VDDQ = 1.35V	0.667	0.688	0.710	
		I_{OUT} = -0.2A, AVIN = 2.5V PVIN = VDDQ = 1.35V	0.641	0.673	0.694	
		I_{OUT} = 0.4 A, AVIN = 2.5 V PVIN = VDDQ = 1.5 V	0.740	0.763	0.786	
		I_{OUT} = –0.4 A, AVIN = 2.5 V PVIN = VDDQ = 1.5 V	0.731	0.752	0.773	
		I_{OUT} = 0.5 A, AVIN = 2.5 V PVIN = VDDQ = 1.6 V	0.790	0.813	0.836	
		I_{OUT} = –0.5 A, AVIN = 2.5 V PVIN = VDDQ = 1.6 V	0.781	0.802	0.823	

(1) Limits are 100% production tested at 25°C. Limits over the operating temperature range are specified through correlation using Statistical Quality Control (SQC) methods. The limits are used to calculate Texas Instruments' Average Outgoing Quality Level (AOQL).
(2) VIN is defined as VIN = AVIN = PVIN.
(3) V_{TT} load regulation is tested by using a 10 ms current pulse and measuring V_{TT}.

Copyright © 2007–2014, Texas Instruments Incorporated

Electrical Characteristics (continued)

Typical limits tested at T_J = 25°C. Minimum and maximum limits apply over the full operating junction temperature range (T_J = –40°C to 125°C).(1) Unless otherwise specified, AVIN = PVIN = 2.5 V, VDDQ = 2.5 V.(2)

PARAMETER		TEST CONDITIONS	MIN	TYP	MAX	UNIT
VOS_{Vtt}	V_{TT} Output Voltage Offset (V_{REF} – V_{TT}) for DDR I (3)	I_{OUT} = 0 A	–30	0	30	mV
		I_{OUT} = –1.5 A	–30	0	30	
		I_{OUT} = 1.5 A	–30	0	30	
	V_{TT} Output Voltage Offset (V_{REF} – V_{TT}) for DDR II (3)	I_{OUT} = 0 A	–30	0	30	
		I_{OUT} = –0.5 A	–30	0	30	
		I_{OUT} = 0.5 A	–30	0	30	
	V_{TT} Output Voltage Offset (V_{REF} – V_{TT}) for DDR III (3)	I_{OUT} = 0 A	–30	0	30	
		I_{OUT} = ±0.2 A	–30	0	30	
		I_{OUT} = ±0.4 A	–30	0	30	
		I_{OUT} = ±0.5 A	–30	0	30	
I_Q	Quiescent Current (4)	I_{OUT} = 0 A		320	500	µA
Z_{VDDQ}	VDDQ Input Impedance			100		kΩ
I_{SD}	Quiescent current in shutdown (4)	SD = 0 V		115	150	µA
I_{Q_SD}	Shutdown leakage current	SD = 0 V		2	5	
V_{IH}	Minimum Shutdown High Level		1.9			V
V_{IL}	Maximum Shutdown Low Level				0.8	
Iv	V_{TT} leakage current in shutdown	SD = 0 V V_{TT} = 1.25 V		1	10	µA
I_{SENSE}	V_{SENSE} Input current			13		nA
T_{SD}	Thermal Shutdown (5)			165		°C
T_{SD_HYS}	Thermal Shutdown Hysteresis			10		

(4) Quiescent current defined as the current flow into AVIN.
(5) The maximum allowable power dissipation is a function of the maximum junction temperature, $T_{J(MAX)}$, the junction to ambient thermal resistance, $R_{\theta JA}$, and the ambient temperature, T_A. Exceeding the maximum allowable power dissipation will cause excessive die temperature and the regulator will go into thermal shutdown.

Copyright © 2007–2014, Texas Instruments Incorporated

7.7 Typical Characteristics

Unless otherwise specified AVIN = PVIN = 2.5 V.

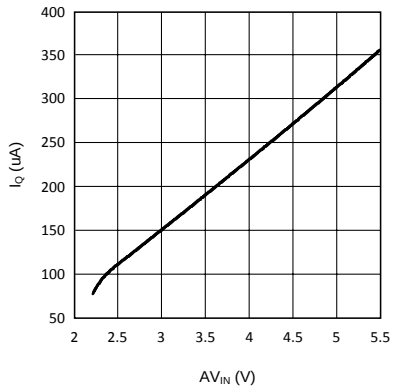

Figure 1. I_Q vs AV_{IN} In SD

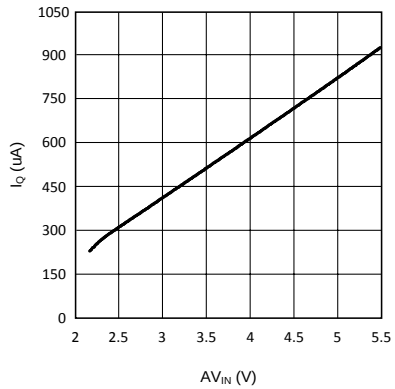

Figure 2. I_Q vs Av_{IN}

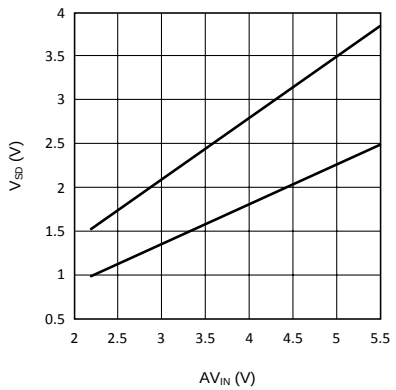

Figure 3. V_{IH} and V_{IL}

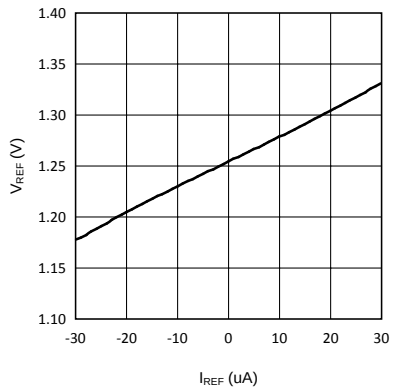

Figure 4. V_{REF} vs I_{REF}

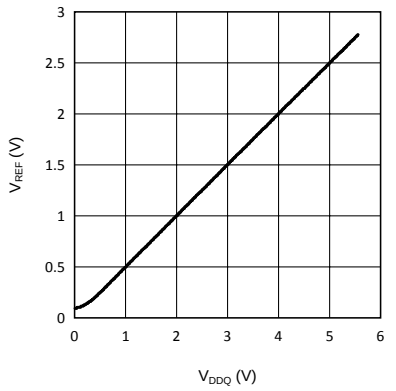

Figure 5. V_{REF} vs V_{DDQ}

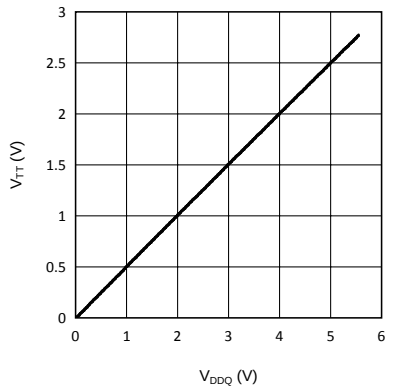

Figure 6. V_{TT} vs V_{DDQ}

Copyright © 2007–2014, Texas Instruments Incorporated

Typical Characteristics (continued)

Unless otherwise specified AVIN = PVIN = 2.5 V.

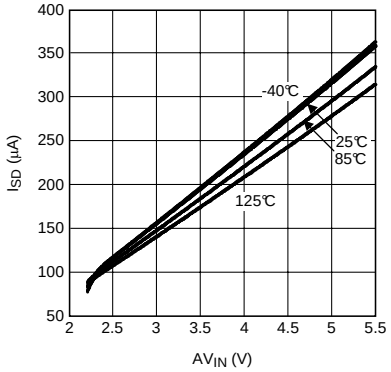

Figure 7. I_{SD} vs AV_{IN} Over Temperature

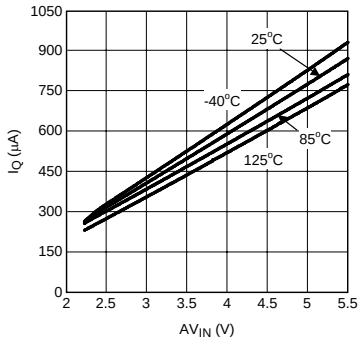

Figure 8. I_Q vs AV_{IN} Over Temperature

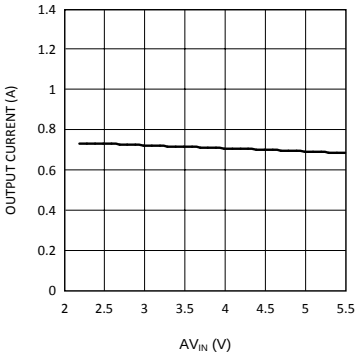

V_{DDQ} = 2.5 V PV_{IN} = 1.8 V

Figure 9. Maximum Sourcing Current vs AV_{IN}

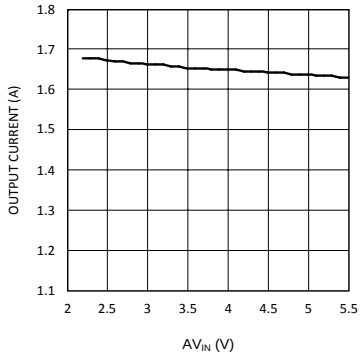

V_{DDQ} = 2.5 V PV_{IN} = 2.5 V

Figure 10. Maximum Sourcing Current vs AV_{IN}

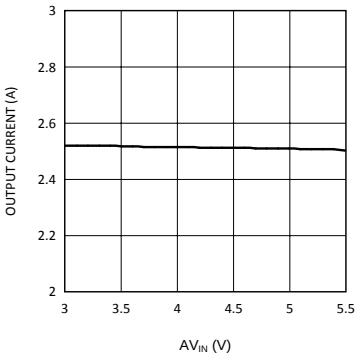

V_{DDQ} = 2.5 V PV_{IN} = 3.3 V

Figure 11. Maximum Sourcing Current vs AV_{IN}

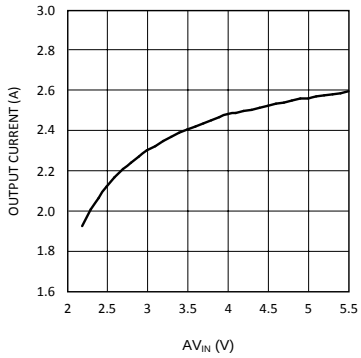

V_{DDQ} = 2.5 V

Figure 12. Maximum Sinking Current vs AV_{IN}

Typical Characteristics (continued)

Unless otherwise specified AVIN = PVIN = 2.5 V.

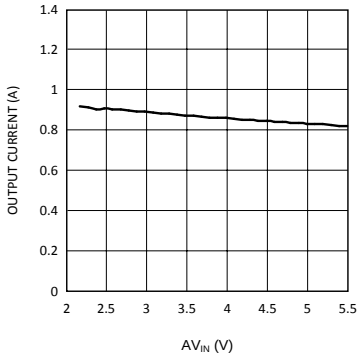

V_{DDQ} = 1.8 V PV_{IN} = 1.8 V

Figure 13. Maximum Sourcing Current vs AV_{IN}

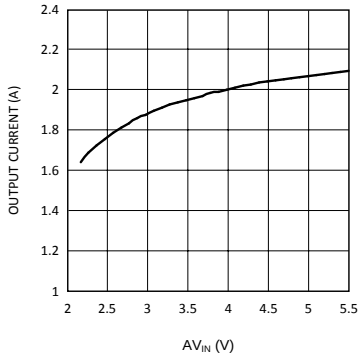

V_{DDQ} = 1.8 V

Figure 14. Maximum Sinking Current vs AV_{IN}

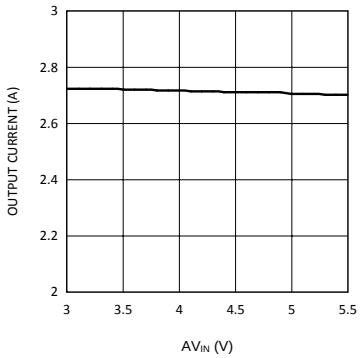

V_{DDQ} = 1.8 V PV_{IN} = 3.3 V

Figure 15. Maximum Sourcing Current vs AV_{IN}

Copyright © 2007–2014, Texas Instruments Incorporated

8 Detailed Description

8.1 Overview

The LP2998 linear regulator is designed to meet JEDEC SSTL-2 and JEDEC SSTL-18 specifications for termination of DDR-SDRAM and DDR2 memory. The device also supports DDR3 and DDR3L VTT bus termination with V_{DDQ} min of 1.35 V. The device contains a high-speed operational amplifier to provide excellent response to load transients. The output stage prevents shoot through while delivering 1.5 A continuous current and transient peaks up to 3 A in the application as required for DDR-SDRAM termination.

8.2 Functional Block Diagram

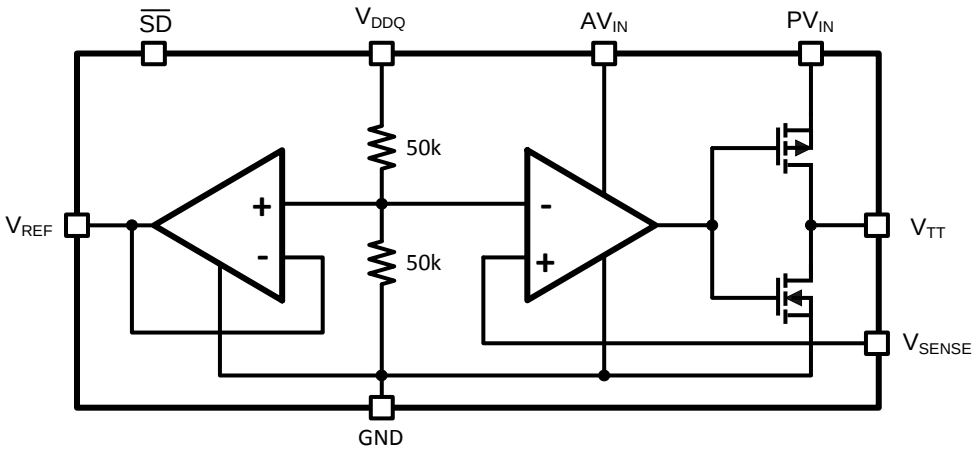

8.3 Feature Description

The LP2998 is a linear bus termination regulator designed to meet the JEDEC requirements of SSTL-2 and SSTL-18. The output, V_{TT} is capable of sinking and sourcing current while regulating the output voltage equal to VDDQ / 2. The output stage has been designed to maintain excellent load regulation while preventing shoot through. The LP2998 also incorporates two distinct power rails that separates the analog circuitry from the power output stage. This allows a split rail approach to be utilized to decrease internal power dissipation. It also permits the LP2998 to provide a termination solution for DDR3-SDRAM and DDR3L-SDRAM memory.

8.4 Device Functional Modes

The LP2998 can also be used to provide a termination voltage for other logic schemes such as SSTL-3 or HSTL. Series Stub Termination Logic (SSTL) was created to improve signal integrity of the data transmission across the memory bus. This termination scheme is essential to prevent data error from signal reflections while transmitting at high frequencies encountered with DDR-SDRAM. The most common form of termination is Class II single parallel termination. This involves one R_S series resistor from the chipset to the memory and one R_T termination resistor. Typical values for R_S and R_T are 25 Ω, although these can be changed to scale the current requirements from the LP2998. This implementation can be seen below in Figure 16.

Device Functional Modes (continued)

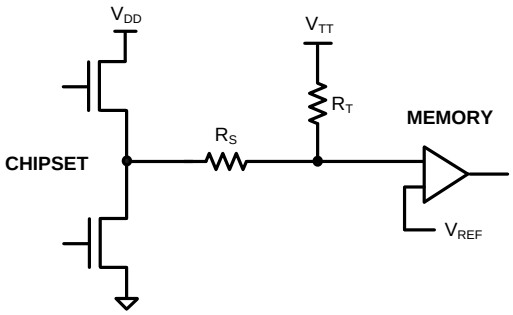

Figure 16. SSTL-Termination Scheme

Copyright © 2007–2014, Texas Instruments Incorporated

9 Application and Implementation

9.1 Application Information

9.1.1 Input Capacitor

The LP2998 does not require a capacitor for input stability, but it is recommended for improved performance during large load transients to prevent the input rail from dropping. The input capacitor should be located as close as possible to the PVIN pin. Several recommendations exist dependent on the application required. A typical value recommended for AL electrolytic capacitors is 50 µF. Ceramic capacitors can also be used, a value in the range of 10 µF with X5R or better would be an ideal choice. The input capacitance can be reduced if the LP2998 is placed close to the bulk capacitance from the output of the 2.5 V DC-DC converter. If the two supply rails (AVIN and PVIN) are separated then the 47 uF capacitor should be placed as close to possible to the PVIN rail. An additional 0.1 uF ceramic capacitor can be placed on the AVIN rail to prevent excessive noise from coupling into the device.

9.1.2 Output Capacitor

The LP2998 has been designed to be insensitive of output capacitor size or ESR (Equivalent Series Resistance). This allows the flexibility to use any capacitor desired. The choice for output capacitor will be determined solely on the application and the requirements for load transient response of V_{TT}. As a general recommendation the output capacitor should be sized above 100 µF with a low ESR for SSTL applications with DDR-SDRAM. The value of ESR should be determined by the maximum current spikes expected and the extent at which the output voltage is allowed to droop. Several capacitor options are available on the market and a few of these are highlighted below:

AL - It should be noted that many aluminum electrolytics only specify impedance at a frequency of 120 Hz, which indicates they have poor high frequency performance. Only aluminum electrolytics that have an impedance specified at a higher frequency (between 20 kHz and 100 kHz) should be used for the LP2998. To improve the ESR several AL electrolytics can be combined in parallel for an overall reduction. An important note to be aware of is the extent at which the ESR will change over temperature. Aluminum electrolytic capacitors can have their ESR rapidly increase at cold temperatures.

Ceramic - Ceramic capacitors typically have a low capacitance, in the range of 10 to 100 µF range, but they have excellent AC performance for bypassing noise because of very low ESR (typically less than 10 mΩ). However, some dielectric types do not have good capacitance characteristics as a function of voltage and temperature. Because of the typically low value of capacitance it is recommended to use ceramic capacitors in parallel with another capacitor such as an aluminum electrolytic. A dielectric of X5R or better is recommended for all ceramic capacitors.

Hybrid - Several hybrid capacitors such as OS-CON and SP are available from several manufacturers. These offer a large capacitance while maintaining a low ESR. These are the best solution when size and performance are critical, although their cost is typically higher than any other capacitor.

9.1.3 Thermal Dissipation

Since the LP2998 is a linear regulator any current flow from V_{TT} will result in internal power dissipation generating heat. To prevent damaging the part from exceeding the maximum allowable junction temperature, care should be taken to derate the part dependent on the maximum expected ambient temperature and power dissipation. The maximum allowable internal temperature rise (T_{Rmax}) can be calculated given the maximum ambient temperature (T_{Amax}) of the application and the maximum allowable junction temperature (T_{Jmax}).

$$T_{Rmax} = T_{Jmax} - T_{Amax} \quad (1)$$

From this equation, the maximum power dissipation (P_{Dmax}) of the part can be calculated:

$$P_{Dmax} = T_{Rmax} / R_{\theta JA} \quad (2)$$

The $R_{\theta JA}$ of the LP2998 will be dependent on several variables: the package used; the thickness of copper; the number of vias and the airflow.

Application Information (continued)

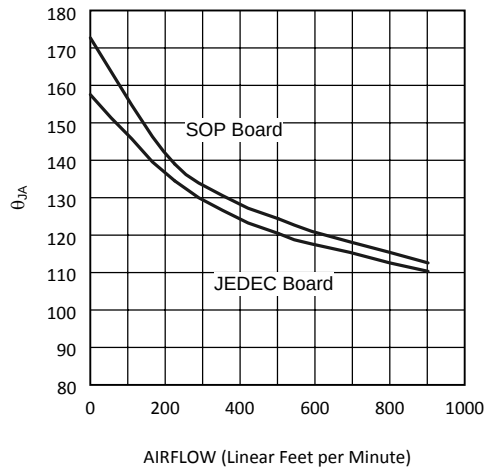

Figure 17. $R_{\theta JA}$ vs Airflow (SOIC-8)

Additional improvements can be made by the judicious use of vias to connect the part and dissipate heat to an internal ground plane. Using larger traces and more copper on the top side of the board can also help. With careful layout it is possible to reduce the $R_{\theta JA}$ further than the nominal values shown in Figure 17.

Layout is also extremely critical to maximize the output current with the SO PowerPAD package. By simply placing vias under the DAP the θ_{JA} can be lowered significantly.

Additional improvements in lowering the $R_{\theta JA}$ can also be achieved with a constant airflow across the package. Maintaining the same conditions as above and utilizing the 2x2 via array, Figure 18 shows how the $R_{\theta JA}$ varies with airflow.

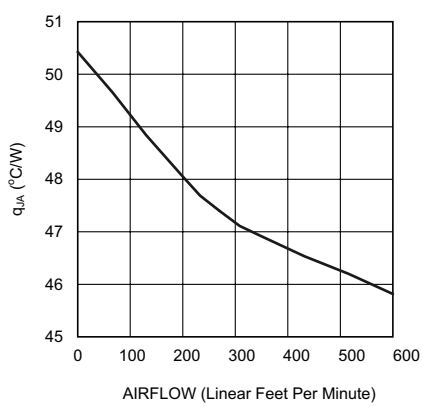

Figure 18. $R_{\Theta JA}$ vs Airflow Speed (Jedec Board with 4 Vias)

Optimizing the $R_{\theta JA}$ and placing the LP2998 in a section of a board exposed to lower ambient temperature allows the part to operate with higher power dissipation. The internal power dissipation can be calculated by summing the three main sources of loss: output current at V_{TT}, either sinking or sourcing, and quiescent current at AVIN and VDDQ. During the active state (when shutdown is not held low) the total internal power dissipation can be calculated from the following equations:

$$P_D = P_{AVIN} + P_{VDDQ} + P_{VTT} \quad (3)$$

$$P_{AVIN} = I_{AVIN} * V_{AVIN} \quad (4)$$

$$P_{VDDQ} = V_{VDDQ} * I_{VDDQ} = V_{VDDQ2} \times R_{VDDQ} \quad (5)$$

To calculate the maximum power dissipation at V_{TT} both conditions at V_{TT} need to be examined, sinking, and sourcing current. Although only one equation will add into the total, V_{TT} cannot source and sink current simultaneously.

Copyright © 2007–2014, Texas Instruments Incorporated

Application Information (continued)

$P_{VTT} = V_{VTT} \times I_{LOAD}$ (Sinking) or (6)

$P_{VTT} = (V_{PVIN} - V_{VTT}) \times I_{LOAD}$ (Sourcing) (7)

The power dissipation of the LP2998 can also be calculated during the shutdown state. During this condition the output V_{TT} will tri-state, therefore that term in the power equation will disappear as it cannot sink or source any current (leakage is negligible). The only losses during shutdown will be the reduced quiescent current at AVIN and the constant impedance that is seen at the VDDQ pin.

$P_D = P_{AVIN} + P_{VDDQ}$ (8)

$P_{AVIN} = I_{AVIN} \times V_{AVIN}$ (9)

$P_{VDDQ} = V_{VDDQ} * I_{VDDQ} = V_{VDDQ2} \times R_{VDDQ}$ (10)

9.2 Typical Application

Several different application circuits are shown below to illustrate some of the options that are possible in configuring the LP2998. Graphs of the individual circuit performance can be found in the *Typical Characteristics* section. These curves illustrate how the maximum output current is affected by changes in AVIN and PVIN.

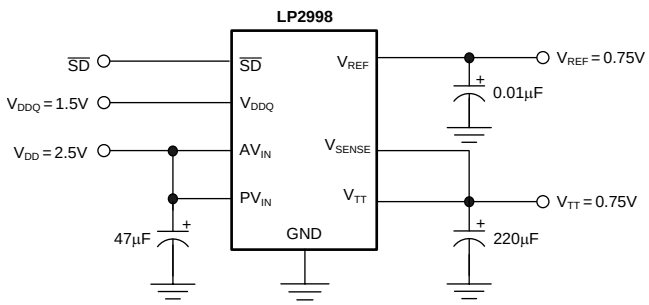

Figure 19. Typical Application Circuit

9.2.1 DDR-III Applications

With the separate VDDQ pin and an internal resistor divider it is possible to use the LP2998 in applications utilizing DDR-III memory. The output stage is connected to the 1.5 V rail and the AVIN pin can be connected to a 2.2 V to 5.5 V rail.

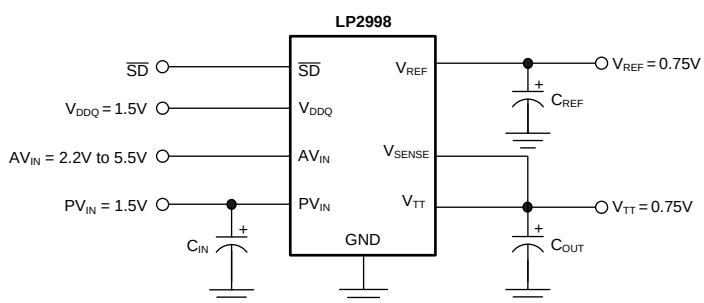

Figure 20. Recommended DDR-III Termination

If it is not desirable to use the 1.5 V - 2.5 V rail it is possible to connect the output stage to a 3.3 V rail. Care should be taken to not exceed the maximum junction temperature as the thermal dissipation increases with lower V_{TT} output voltages. For this reason it is not recommended to power PVIN off a rail higher than the nominal 3.3 V. The advantage of this configuration is that it has the ability to source and sink a higher maximum continuous current.

Copyright © 2007–2014, Texas Instruments Incorporated

Typical Application (continued)

9.2.2 DDR-II Applications

With the separate VDDQ pin and an internal resistor divider it is possible to use the LP2998 in applications utilizing DDR-II memory. Figure 21 and Figure 22 show several implementations of recommended circuits with output curves displayed in the *Typical Characteristics*. Figure 21 shows the recommended circuit configuration for DDR-II applications. The output stage is connected to the 1.8 V rail and the AVIN pin can be connected to either a 3.3 V or 5 V rail.

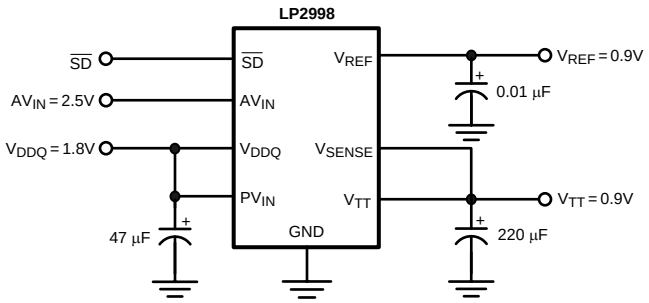

Figure 21. Recommended DDR-II Termination

If it is not desirable to use the 1.8 V rail it is possible to connect the output stage to a 3.3 V rail. Care should be taken to not exceed the maximum junction temperature as the thermal dissipation increases with lower V_{TT} output voltages. For this reason it is not recommended to power PVIN off a rail higher than the nominal 3.3 V. The advantage of this configuration is that it has the ability to source and sink a higher maximum continuous current.

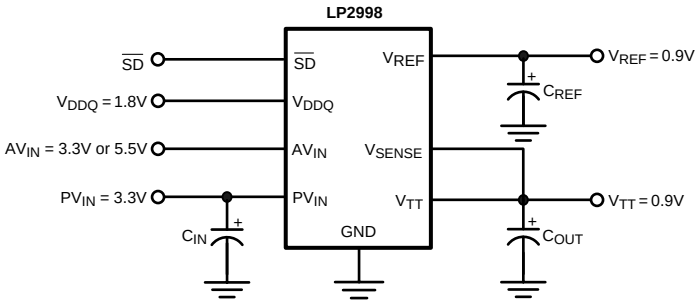

Figure 22. DDR-II Termination with Higher Voltage Rails

9.2.3 SSTL-2 Applications

For the majority of applications that implement the SSTL-2 termination scheme it is recommended to connect all the input rails to the 2.5 V rail. This provides an optimal trade-off between power dissipation and component count and selection. An example of this circuit can be seen in Figure 23.

Copyright © 2007–2014, Texas Instruments Incorporated

Typical Application (continued)

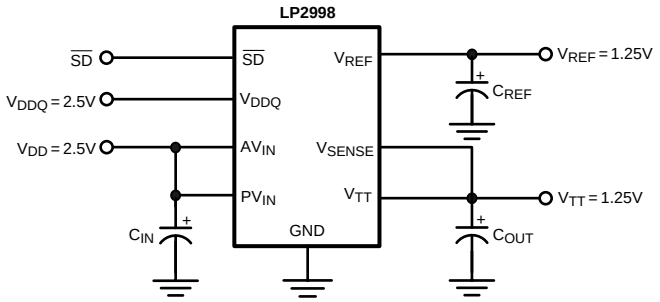

Figure 23. Recommended SSTL-2 Implementation

If power dissipation or efficiency is a major concern then the LP2998 has the ability to operate on split power rails. The output stage (PVIN) can be operated on a lower rail such as 1.8 V and the analog circuitry (AVIN) can be connected to a higher rail such as 2.5 V, 3.3 V, or 5 V. This allows the internal power dissipation to be lowered when sourcing current from V_{TT}. The disadvantage of this circuit is that the maximum continuous current is reduced because of the lower rail voltage, although it is adequate for all motherboard SSTL-2 applications. Increasing the output capacitance can also help if periods of large load transients will be encountered.

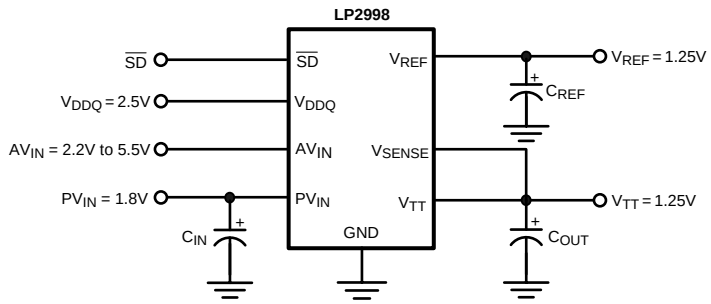

Figure 24. Lower Power Dissipation SSTL-2 Implementation

The third option for SSTL-2 applications in the situation that a 1.8 V rail is not available and it is not desirable to use 2.5 V, is to connect the LP2998 power rail to 3.3 V. In this situation AVIN will be limited to operation on the 3.3 V or 5 V rail as PVIN can never exceed AVIN. This configuration has the ability to provide the maximum continuous output current at the downside of higher thermal dissipation. Care should be taken to prevent the LP2998 from experiencing large current levels which cause the junction temperature to exceed the maximum. Because of this risk it is not recommended to supply the output stage with a voltage higher than a nominal 3.3 V rail.

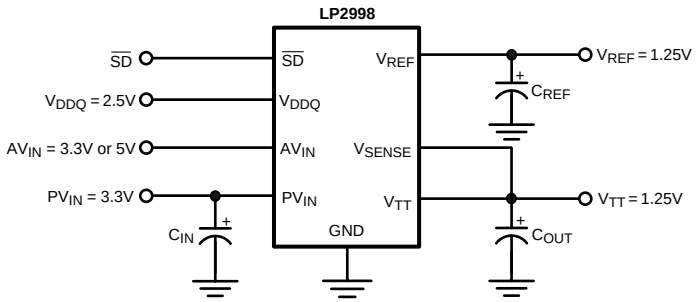

Figure 25. SSTL-2 Implementation with Higher Voltage Rails

Typical Application (continued)

9.2.4 Level Shifting

If standards other than SSTL-2 are required, such as SSTL-3, it may be necessary to use a different scaling factor than 0.5 times V_{DDQ} for regulating the output voltage. Several options are available to scale the output to any voltage required. One method is to level shift the output by using feedback resistors from V_{TT} to the V_{SENSE} pin. This has been illustrated in Figure 26 and Figure 27. Figure 26 shows how to use two resistors to level shift V_{TT} above the internal reference voltage of VDDQ/2. To calculate the exact voltage at V_{TT} the following equation can be used.

$$V_{TT} = VDDQ/2\ (1 + R1/R2) \tag{11}$$

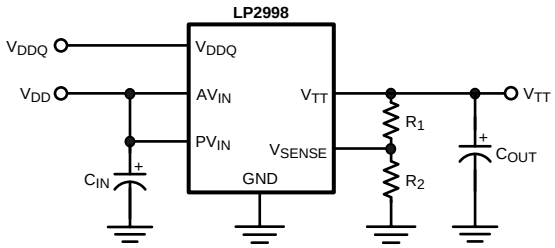

Figure 26. Increasing VTT by Level Shifting

Conversely, the R2 resistor can be placed between V_{SENSE} and V_{DDQ} to shift the V_{TT} output lower than the internal reference voltage of VDDQ/2. The equations relating VTT and the resistors can be seen below:

$$V_{TT} = VDDQ/2\ (1 - R1/R2) \tag{12}$$

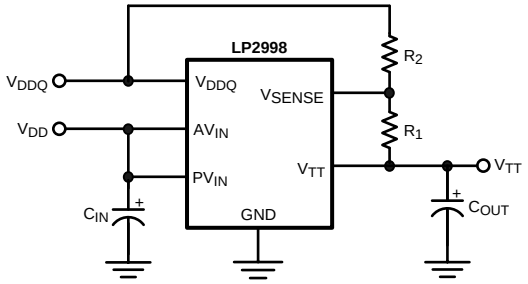

Figure 27. Decreasing VTT by Level Shifting

9.2.4.1 Output Capacitor Selection

For applications utilizing the LP2998 to terminate SSTL-2 I/O signals the typical application circuit shown in Figure 28 can be implemented.

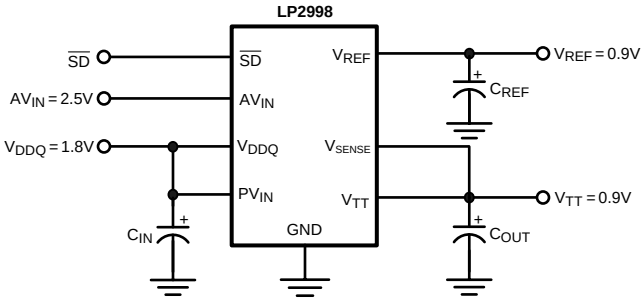

Figure 28. Typical SSTL-2 Application Circuit

Copyright © 2007–2014, Texas Instruments Incorporated

Typical Application (continued)

This circuit permits termination in a minimum amount of board space and component count. Capacitor selection can be varied depending on the number of lines terminated and the maximum load transient. However, with motherboards and other applications where V_{TT} is distributed across a long plane it is advisable to use multiple bulk capacitors and addition to high frequency decoupling. Figure 29 shown below depicts an example circuit where 2 bulk output capacitors could be situated at both ends of the V_{TT} plane for optimal placement. Large aluminum electrolytic capacitors are used for their low ESR and low cost.

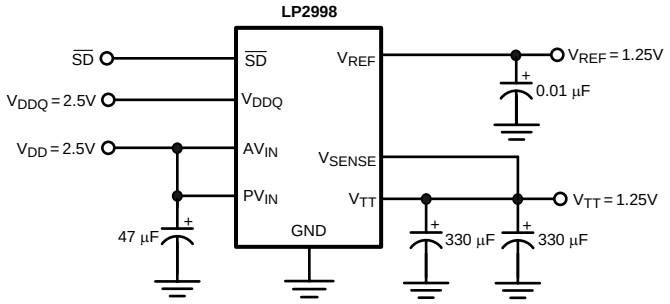

Figure 29. Typical SSTL-2 Application Circuit for Motherboards

In most PC applications an extensive amount of decoupling is required because of the long interconnects encountered with the DDR-SDRAM DIMMs mounted on modules. As a result bulk aluminum electrolytic capacitors in the range of 1000 µF are typically used.

9.2.5 HSTL Applications

The LP2998 can be easily adapted for HSTL applications by connecting V_{DDQ} to the 1.5 V rail. This will produce a V_{TT} and V_{REF} voltage of approximately 0.75 V for the termination resistors. AVIN and PVIN should be connected to a 2.5 V rail for optimal performance.

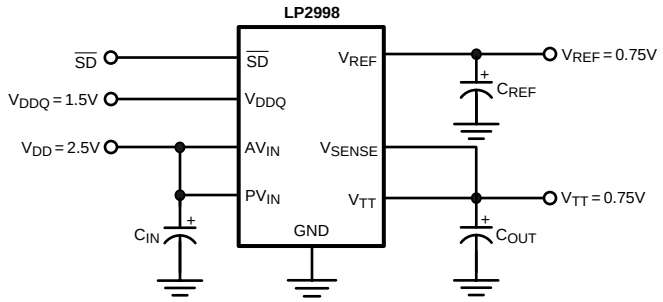

Figure 30. HSTL Application

9.2.6 QDR Applications

Quad data rate (QDR) applications utilize multiple channels for improved memory performance. However, this increase in bus lines has the effect of increasing the current levels required for termination. The recommended approach in terminating multiple channels is to use a dedicated LP2998 for each channel. This simplifies layout and reduces the internal power dissipation for each regulator. Separate V_{REF} signals can be used for each DIMM bank from the corresponding regulator with the chipset reference provided by a local resistor divider or one of the LP2998 signals. Because V_{REF} and V_{TT} are expected to track and the part to part variations are minor, there should be little difference between the reference signals of each LP2998.

Copyright © 2007–2014, Texas Instruments Incorporated

10 Power Supply Recommendations

There are several recommendations for the LP2998 input power supply. An input capacitor is not required but is recommended for improved performance during large load transients to prevent the input rail from dropping. The input capacitor should be located as close as possible to the PVIN pin. Several recommendations exist dependent on the application required. A typical value recommended for AL electrolytic capacitors is 50 µF. Ceramic capacitors can also be used, a value in the range of 10 µF with X5R or better would be an ideal choice. The input capacitance can be reduced if the LP2998 is placed close to the bulk capacitance from the output of the 2.5 V DC-DC converter. If the two supply rails (AVIN and PVIN) are separated then the 47 uF capacitor should be placed as close to possible to the PVIN rail. An additional 0.1 uF ceramic capacitor can be placed on the AVIN rail to prevent excessive noise from coupling into the device.

11 Layout

11.1 Layout Guidelines

1. The input capacitor for the power rail should be placed as close as possible to the PVIN pin.
2. V_{SENSE} should be connected to the V_{TT} termination bus at the point where regulation is required. For motherboard applications an ideal location would be at the center of the termination bus.
3. V_{DDQ} can be connected remotely to the V_{DDQ} rail input at either the DIMM or the Chipset. This provides the most accurate point for creating the reference voltage.
4. For improved thermal performance excessive top side copper should be used to dissipate heat from the package. Numerous vias from the ground connection to the internal ground plane will help. Additionally these can be located underneath the package if manufacturing standards permit.
5. Care should be taken when routing the V_{SENSE} trace to avoid noise pickup from switching I/O signals. A 0.1 µF ceramic capacitor located close to the $_{SENSE}$ can also be used to filter any unwanted high frequency signal. This can be an issue especially if long $_{SENSE}$ traces are used.
6. V_{REF} should be bypassed with a 0.01 µF or 0.1 µF ceramic capacitor for improved performance. This capacitor should be located as close as possible to the V_{REF} pin.

Copyright © 2007–2014, Texas Instruments Incorporated

11.2 Layout Examples

Figure 31 and Figure 32 are layout examples for the LP2998/Q1. These examples are taken from the LP2998EVM.

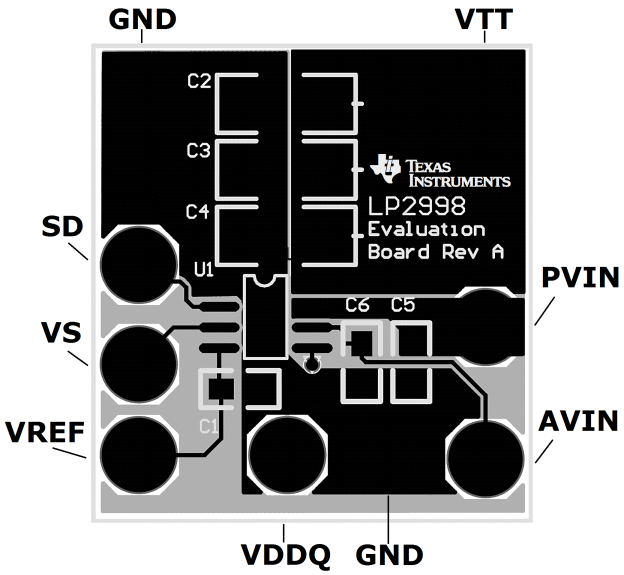

Figure 31. LP2998EVM SO PowerPAD Layout Example (Front)

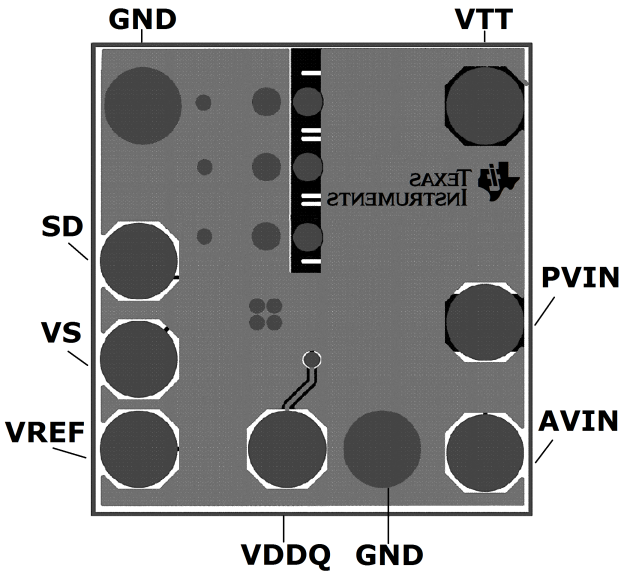

Figure 32. LP2998EVM SO PowerPAD Layout Example (Back)

12 Device and Documentation Support

12.1 Related Links

Table 1 lists quick access links. Categories include technical documents, support and community resources, tools and software, and quick access to sample or buy.

Table 1. Related Links

PARTS	PRODUCT FOLDER	SAMPLE & BUY	TECHNICAL DOCUMENTS	TOOLS & SOFTWARE	SUPPORT & COMMUNITY
LP2998	Click here	Click here	Click here	Click here	Click here
LP2998-Q1	Click here	Click here	Click here	Click here	Click here

12.2 Trademarks

PowerPAD is a trademark of Texas Instruments.
All other trademarks are the property of their respective owners.

12.3 Electrostatic Discharge Caution

These devices have limited built-in ESD protection. The leads should be shorted together or the device placed in conductive foam during storage or handling to prevent electrostatic damage to the MOS gates.

12.4 Glossary

SLYZ022 — *TI Glossary*.

This glossary lists and explains terms, acronyms, and definitions.

13 Mechanical, Packaging, and Orderable Information

The following pages include mechanical, packaging, and orderable information. This information is the most current data available for the designated devices. This data is subject to change without notice and revision of this document. For browser-based versions of this data sheet, refer to the left-hand navigation.

Copyright © 2007–2014, Texas Instruments Incorporated

PACKAGING INFORMATION

Orderable part number	Status (1)	Material type (2)	Package | Pins	Package qty | Carrier	RoHS (3)	Lead finish/ Ball material (4)	MSL rating/ Peak reflow (5)	Op temp (°C)	Part marking (6)
LP2998MA/NOPB	Active	Production	SOIC (D) | 8	95 | TUBE	Yes	SN	Level-1-260C-UNLIM	-40 to 125	LP2998 MA
LP2998MA/NOPB.A	Active	Production	SOIC (D) | 8	95 | TUBE	Yes	SN	Level-1-260C-UNLIM	-40 to 125	LP2998 MA
LP2998MAE/NOPB	Active	Production	SOIC (D) | 8	250 | SMALL T&R	Yes	SN	Level-1-260C-UNLIM	-40 to 125	LP2998 MA
LP2998MAE/NOPB.A	Active	Production	SOIC (D) | 8	250 | SMALL T&R	Yes	SN	Level-1-260C-UNLIM	-40 to 125	LP2998 MA
LP2998MAX/NOPB	Active	Production	SOIC (D) | 8	2500 | LARGE T&R	Yes	SN	Level-1-260C-UNLIM	-40 to 125	LP2998 MA
LP2998MAX/NOPB.A	Active	Production	SOIC (D) | 8	2500 | LARGE T&R	Yes	SN	Level-1-260C-UNLIM	-40 to 125	LP2998 MA
LP2998MR/NOPB	Active	Production	SO PowerPAD (DDA) | 8	95 | TUBE	Yes	NIPDAU | SN	Level-3-260C-168 HR	-40 to 125	LP2998 MR
LP2998MR/NOPB.A	Active	Production	SO PowerPAD (DDA) | 8	95 | TUBE	Yes	NIPDAU	Level-3-260C-168 HR	-40 to 125	LP2998 MR
LP2998MRE/NOPB	Active	Production	SO PowerPAD (DDA) | 8	250 | SMALL T&R	Yes	NIPDAU | SN	Level-3-260C-168 HR	-40 to 125	LP2998 MR
LP2998MRE/NOPB.A	Active	Production	SO PowerPAD (DDA) | 8	250 | SMALL T&R	Yes	NIPDAU	Level-3-260C-168 HR	-40 to 125	LP2998 MR
LP2998MRX/NOPB	Active	Production	SO PowerPAD (DDA) | 8	2500 | LARGE T&R	Yes	NIPDAU | SN	Level-3-260C-168 HR	-40 to 125	LP2998 MR
LP2998MRX/NOPB.A	Active	Production	SO PowerPAD (DDA) | 8	2500 | LARGE T&R	Yes	NIPDAU	Level-3-260C-168 HR	-40 to 125	LP2998 MR
LP2998MRX/NOPBG4	Active	Production	SO PowerPAD (DDA) | 8	2500 | LARGE T&R	Yes	NIPDAU	Level-3-260C-168 HR	-40 to 125	LP2998 MR
LP2998MRX/NOPBG4.A	Active	Production	SO PowerPAD (DDA) | 8	2500 | LARGE T&R	Yes	NIPDAU	Level-3-260C-168 HR	-40 to 125	LP2998 MR
LP2998QMR/NOPB	Active	Production	SO PowerPAD (DDA) | 8	95 | TUBE	Yes	NIPDAU | SN	Level-3-260C-168 HR	-40 to 125	LP2998 Q1MR
LP2998QMR/NOPB.A	Active	Production	SO PowerPAD (DDA) | 8	95 | TUBE	Yes	NIPDAU	Level-3-260C-168 HR	-40 to 125	LP2998 Q1MR

Orderable part number	Status (1)	Material type (2)	Package | Pins	Package qty | Carrier	RoHS (3)	Lead finish/ Ball material (4)	MSL rating/ Peak reflow (5)	Op temp (°C)	Part marking (6)
LP2998QMRE/NOPB	Active	Production	SO PowerPAD (DDA) | 8	250 | SMALL T&R	Yes	NIPDAU | SN	Level-3-260C-168 HR	-40 to 125	LP2998 Q1MR
LP2998QMRE/NOPB.A	Active	Production	SO PowerPAD (DDA) | 8	250 | SMALL T&R	Yes	NIPDAU	Level-3-260C-168 HR	-40 to 125	LP2998 Q1MR
LP2998QMRX/NOPB	Active	Production	SO PowerPAD (DDA) | 8	2500 | LARGE T&R	Yes	NIPDAU | SN	Level-3-260C-168 HR	-40 to 125	LP2998 Q1MR
LP2998QMRX/NOPB.A	Active	Production	SO PowerPAD (DDA) | 8	2500 | LARGE T&R	Yes	NIPDAU	Level-3-260C-168 HR	-40 to 125	LP2998 Q1MR

(1) **Status:** For more details on status, see our product life cycle.

(2) **Material type:** When designated, preproduction parts are prototypes/experimental devices, and are not yet approved or released for full production. Testing and final process, including without limitation quality assurance, reliability performance testing, and/or process qualification, may not yet be complete, and this item is subject to further changes or possible discontinuation. If available for ordering, purchases will be subject to an additional waiver at checkout, and are intended for early internal evaluation purposes only. These items are sold without warranties of any kind.

(3) **RoHS values:** Yes, No, RoHS Exempt. See the TI RoHS Statement for additional information and value definition.

(4) **Lead finish/Ball material:** Parts may have multiple material finish options. Finish options are separated by a vertical ruled line. Lead finish/Ball material values may wrap to two lines if the finish value exceeds the maximum column width.

(5) **MSL rating/Peak reflow:** The moisture sensitivity level ratings and peak solder (reflow) temperatures. In the event that a part has multiple moisture sensitivity ratings, only the lowest level per JEDEC standards is shown. Refer to the shipping label for the actual reflow temperature that will be used to mount the part to the printed circuit board.

(6) **Part marking:** There may be an additional marking, which relates to the logo, the lot trace code information, or the environmental category of the part.

Multiple part markings will be inside parentheses. Only one part marking contained in parentheses and separated by a "~" will appear on a part. If a line is indented then it is a continuation of the previous line and the two combined represent the entire part marking for that device.

Important Information and Disclaimer: The information provided on this page represents TI's knowledge and belief as of the date that it is provided. TI bases its knowledge and belief on information provided by third parties, and makes no representation or warranty as to the accuracy of such information. Efforts are underway to better integrate information from third parties. TI has taken and continues to take reasonable steps to provide representative and accurate information but may not have conducted destructive testing or chemical analysis on incoming materials and chemicals. TI and TI suppliers consider certain information to be proprietary, and thus CAS numbers and other limited information may not be available for release.

In no event shall TI's liability arising out of such information exceed the total purchase price of the TI part(s) at issue in this document sold by TI to Customer on an annual basis.

OTHER QUALIFIED VERSIONS OF LP2998, LP2998-Q1 :

- Catalog : LP2998
- Automotive : LP2998-Q1

NOTE: Qualified Version Definitions:

- Catalog - TI's standard catalog product
- Automotive - Q100 devices qualified for high-reliability automotive applications targeting zero defects

TAPE AND REEL INFORMATION

REEL DIMENSIONS

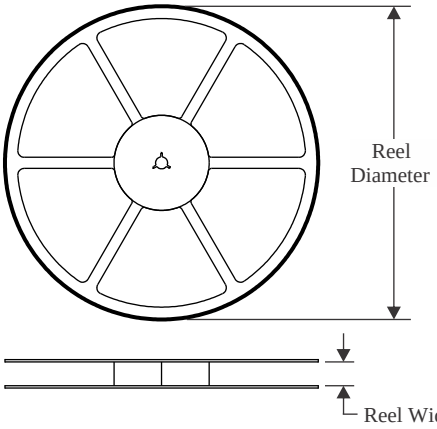

TAPE DIMENSIONS

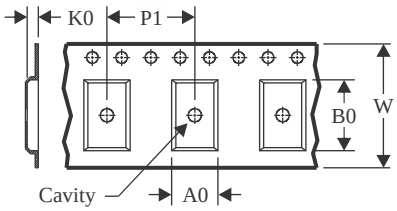

A0	Dimension designed to accommodate the component width
B0	Dimension designed to accommodate the component length
K0	Dimension designed to accommodate the component thickness
W	Overall width of the carrier tape
P1	Pitch between successive cavity centers

QUADRANT ASSIGNMENTS FOR PIN 1 ORIENTATION IN TAPE

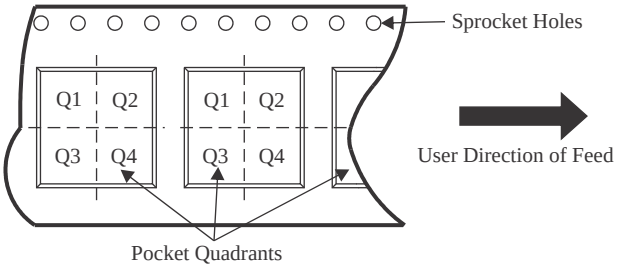

*All dimensions are nominal

Device	Package Type	Package Drawing	Pins	SPQ	Reel Diameter (mm)	Reel Width W1 (mm)	A0 (mm)	B0 (mm)	K0 (mm)	P1 (mm)	W (mm)	Pin1 Quadrant
LP2998MAE/NOPB	SOIC	D	8	250	178.0	12.4	6.5	5.4	2.0	8.0	12.0	Q1
LP2998MAX/NOPB	SOIC	D	8	2500	330.0	12.4	6.5	5.4	2.0	8.0	12.0	Q1
LP2998MRE/NOPB	SO PowerPAD	DDA	8	250	178.0	12.4	6.5	5.4	2.0	8.0	12.0	Q1
LP2998MRE/NOPB	SO PowerPAD	DDA	8	250	330.0	12.5	6.4	5.2	2.1	8.0	12.0	Q1
LP2998MRX/NOPB	SO PowerPAD	DDA	8	2500	330.0	12.5	6.4	5.2	2.1	8.0	12.0	Q1
LP2998MRX/NOPB	SO PowerPAD	DDA	8	2500	330.0	12.4	6.5	5.4	2.0	8.0	12.0	Q1
LP2998MRX/NOPBG4	SO PowerPAD	DDA	8	2500	330.0	12.5	6.4	5.2	2.1	8.0	12.0	Q1
LP2998QMRE/NOPB	SO PowerPAD	DDA	8	250	330.0	12.5	6.4	5.2	2.1	8.0	12.0	Q1
LP2998QMRE/NOPB	SO PowerPAD	DDA	8	250	178.0	12.4	6.5	5.4	2.0	8.0	12.0	Q1
LP2998QMRX/NOPB	SO PowerPAD	DDA	8	2500	330.0	12.5	6.4	5.2	2.1	8.0	12.0	Q1

Device	Package Type	Package Drawing	Pins	SPQ	Reel Diameter (mm)	Reel Width W1 (mm)	A0 (mm)	B0 (mm)	K0 (mm)	P1 (mm)	W (mm)	Pin1 Quadrant
LP2998QMRX/NOPB	SO PowerPAD	DDA	8	2500	330.0	12.4	6.5	5.4	2.0	8.0	12.0	Q1

TAPE AND REEL BOX DIMENSIONS

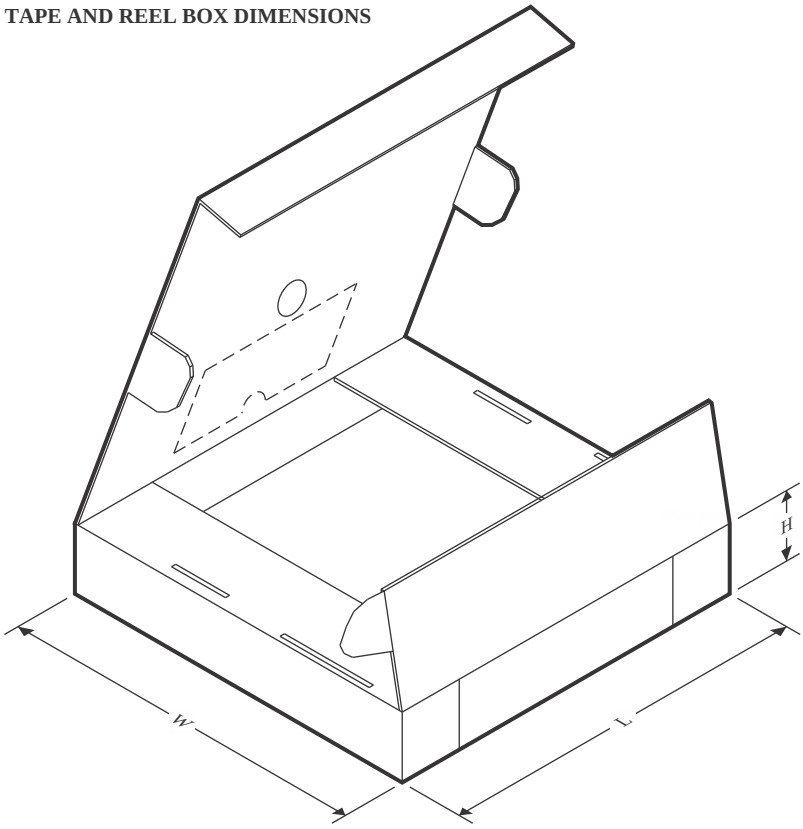

*All dimensions are nominal

Device	Package Type	Package Drawing	Pins	SPQ	Length (mm)	Width (mm)	Height (mm)
LP2998MAE/NOPB	SOIC	D	8	250	208.0	191.0	35.0
LP2998MAX/NOPB	SOIC	D	8	2500	367.0	367.0	35.0
LP2998MRE/NOPB	SO PowerPAD	DDA	8	250	208.0	191.0	35.0
LP2998MRE/NOPB	SO PowerPAD	DDA	8	250	340.5	338.1	20.6
LP2998MRX/NOPB	SO PowerPAD	DDA	8	2500	353.0	353.0	32.0
LP2998MRX/NOPB	SO PowerPAD	DDA	8	2500	356.0	356.0	36.0
LP2998MRX/NOPBG4	SO PowerPAD	DDA	8	2500	353.0	353.0	32.0
LP2998QMRE/NOPB	SO PowerPAD	DDA	8	250	340.5	338.1	20.6
LP2998QMRE/NOPB	SO PowerPAD	DDA	8	250	208.0	191.0	35.0
LP2998QMRX/NOPB	SO PowerPAD	DDA	8	2500	340.5	338.1	20.6
LP2998QMRX/NOPB	SO PowerPAD	DDA	8	2500	356.0	356.0	36.0

TUBE

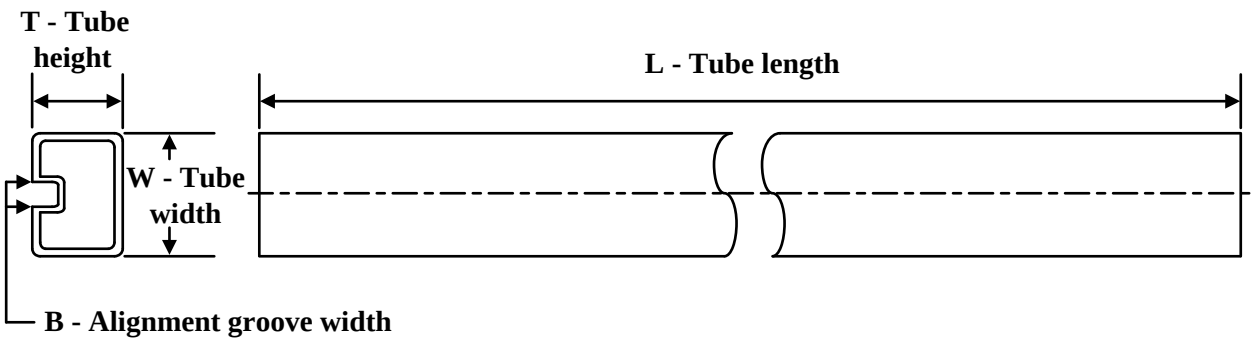

*All dimensions are nominal

Device	Package Name	Package Type	Pins	SPQ	L (mm)	W (mm)	T (µm)	B (mm)
LP2998MA/NOPB	D	SOIC	8	95	495	8	4064	3.05
LP2998MA/NOPB.A	D	SOIC	8	95	495	8	4064	3.05
LP2998MR/NOPB	DDA	HSOIC	8	95	507.79	8	630	4.32
LP2998MR/NOPB	DDA	HSOIC	8	95	495	8	4064	3.05
LP2998MR/NOPB.A	DDA	HSOIC	8	95	507.79	8	630	4.32
LP2998MR/NOPB.A	DDA	HSOIC	8	95	495	8	4064	3.05
LP2998QMR/NOPB	DDA	HSOIC	8	95	495	8	4064	3.05
LP2998QMR/NOPB	DDA	HSOIC	8	95	507.79	8	630	4.32
LP2998QMR/NOPB.A	DDA	HSOIC	8	95	507.79	8	630	4.32
LP2998QMR/NOPB.A	DDA	HSOIC	8	95	495	8	4064	3.05

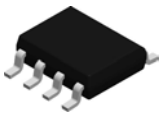

PACKAGE OUTLINE

D0008A

SOIC - 1.75 mm max height

SMALL OUTLINE INTEGRATED CIRCUIT

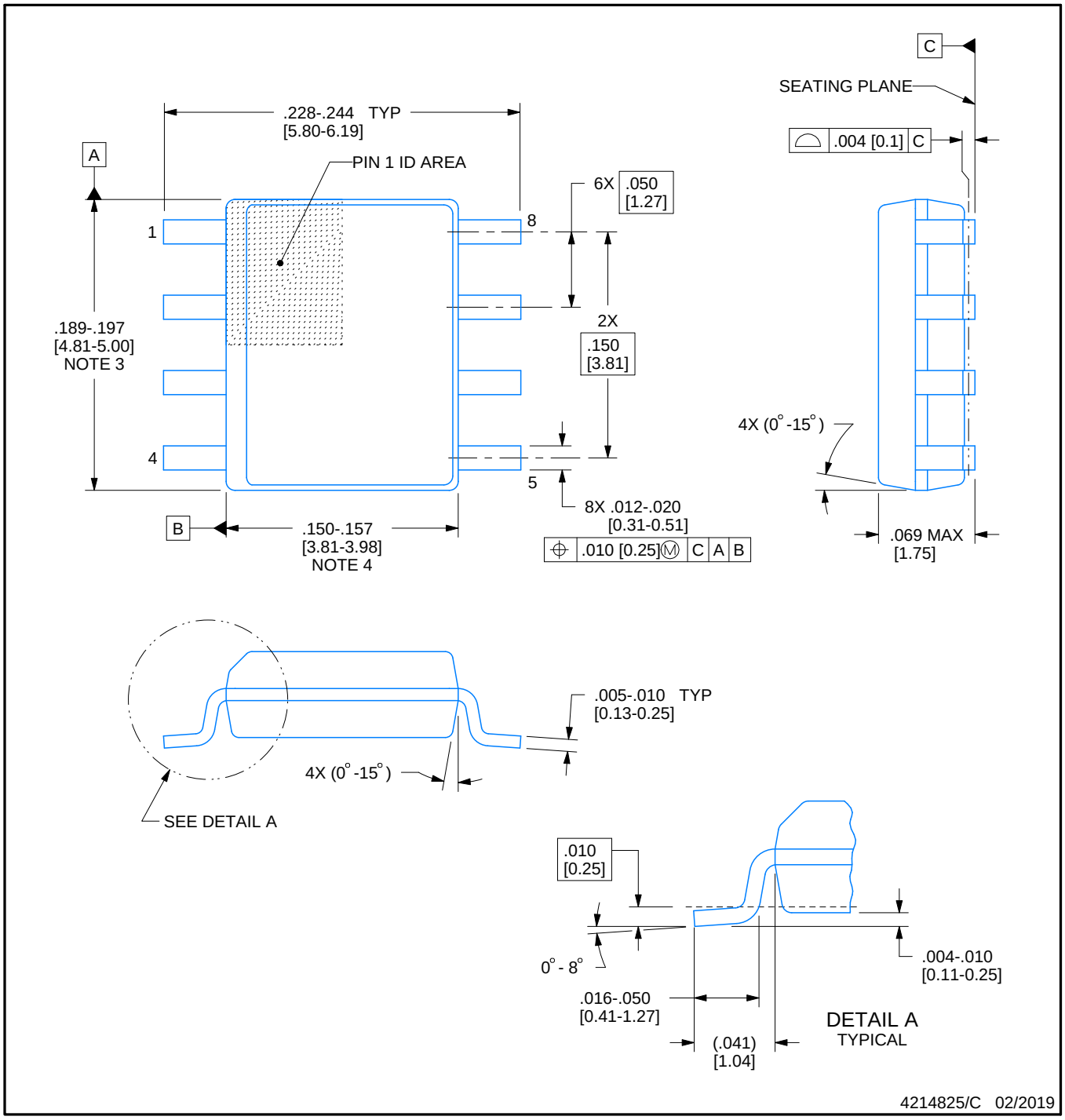

NOTES:

1. Linear dimensions are in inches [millimeters]. Dimensions in parenthesis are for reference only. Controlling dimensions are in inches. Dimensioning and tolerancing per ASME Y14.5M.
2. This drawing is subject to change without notice.
3. This dimension does not include mold flash, protrusions, or gate burrs. Mold flash, protrusions, or gate burrs shall not exceed .006 [0.15] per side.
4. This dimension does not include interlead flash.
5. Reference JEDEC registration MS-012, variation AA.

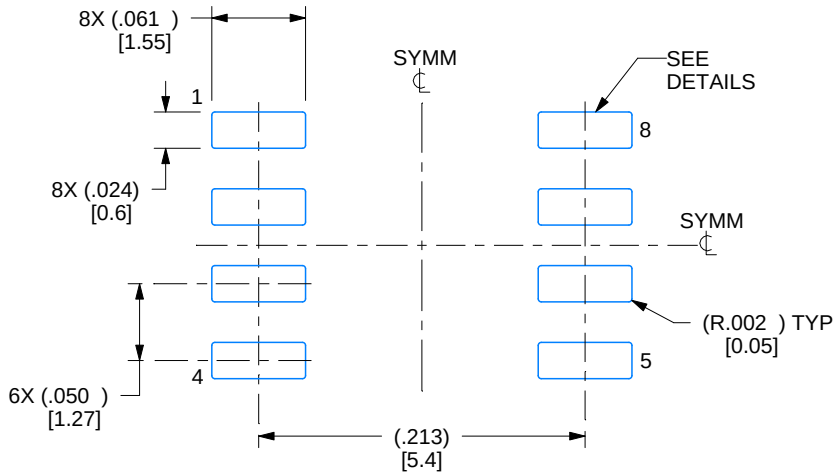

LAND PATTERN EXAMPLE
EXPOSED METAL SHOWN
SCALE:8X

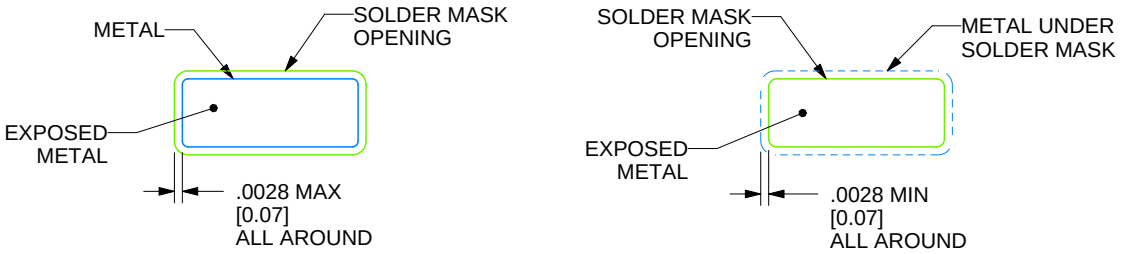

SOLDER MASK DETAILS

4214825/C 02/2019

NOTES: (continued)

6. Publication IPC-7351 may have alternate designs.
7. Solder mask tolerances between and around signal pads can vary based on board fabrication site.

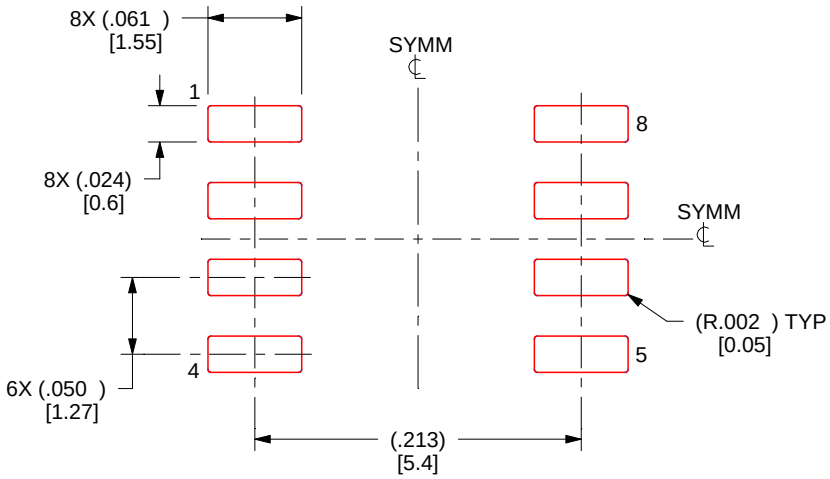

SOLDER PASTE EXAMPLE
BASED ON .005 INCH [0.125 MM] THICK STENCIL
SCALE:8X

4214825/C 02/2019

NOTES: (continued)

8. Laser cutting apertures with trapezoidal walls and rounded corners may offer better paste release. IPC-7525 may have alternate design recommendations.
9. Board assembly site may have different recommendations for stencil design.

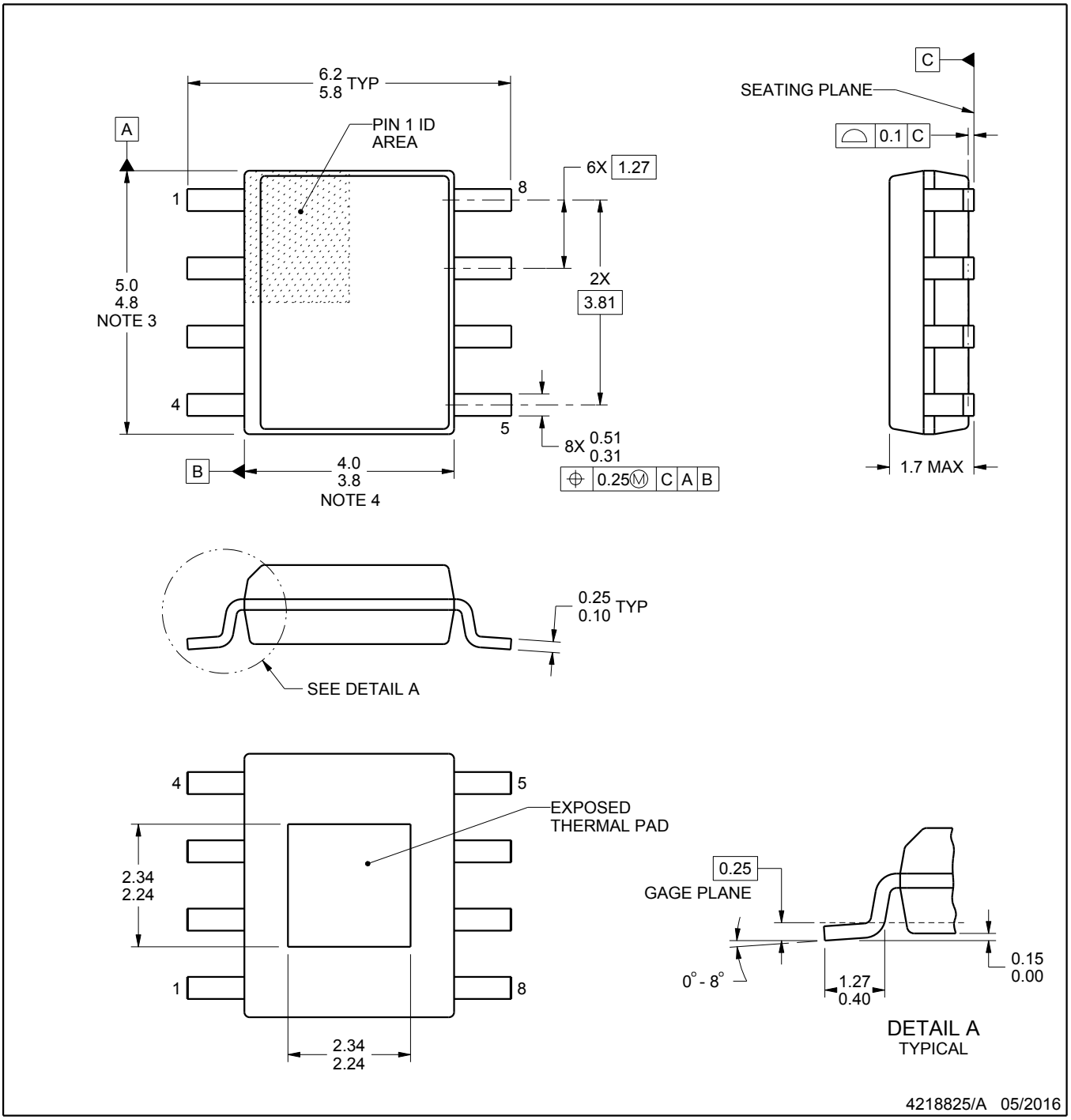

PowerPAD is a trademark of Texas Instruments.

NOTES:

1. All linear dimensions are in millimeters. Any dimensions in parenthesis are for reference only. Dimensioning and tolerancing per ASME Y14.5M.
2. This drawing is subject to change without notice.
3. This dimension does not include mold flash, protrusions, or gate burrs. Mold flash, protrusions, or gate burrs shall not exceed 0.15 mm per side.
4. This dimension does not include interlead flash. Interlead flash shall not exceed 0.25 mm per side.
5. Reference JEDEC registration MS-012.

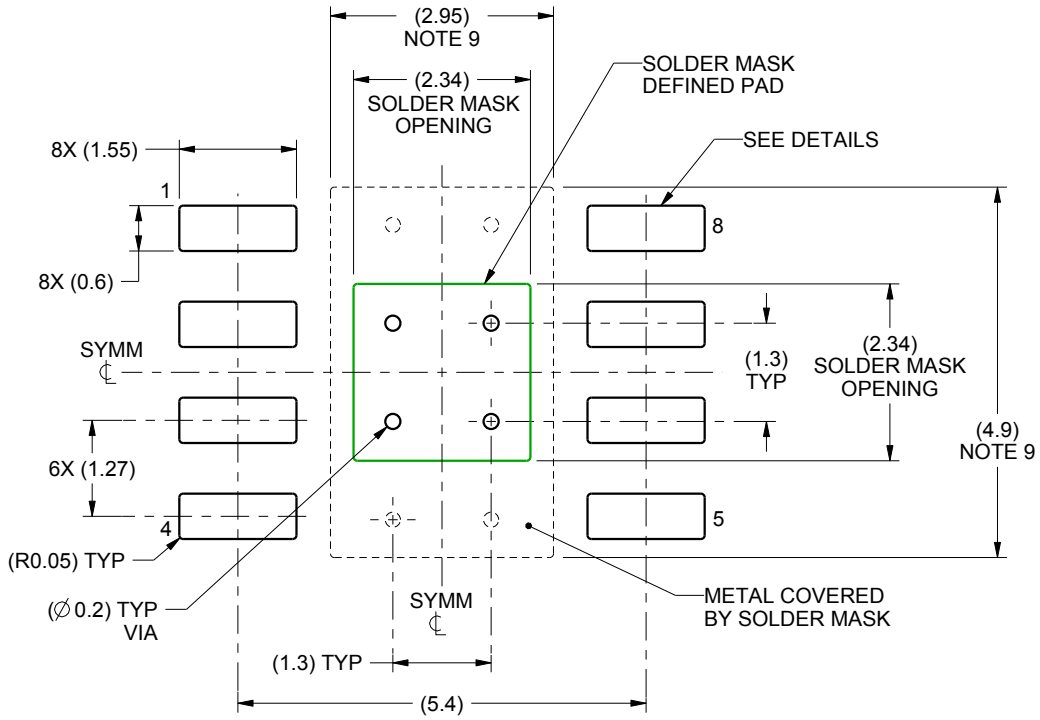

LAND PATTERN EXAMPLE
SCALE:10X

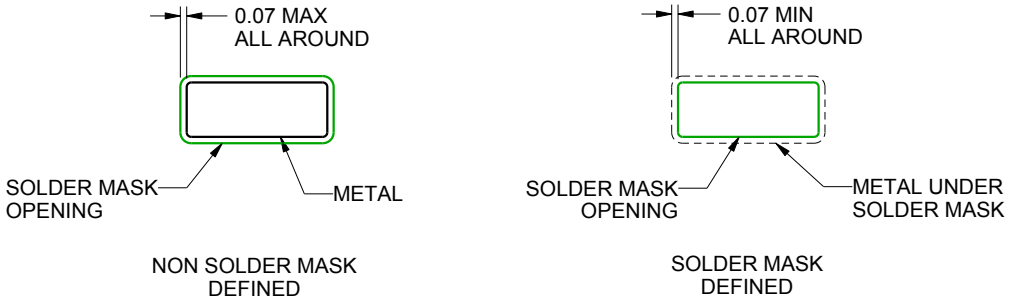

SOLDER MASK DETAILS

4218825/A 05/2016

NOTES: (continued)

6. Publication IPC-7351 may have alternate designs.
7. Solder mask tolerances between and around signal pads can vary based on board fabrication site.
8. This package is designed to be soldered to a thermal pad on the board. For more information, see Texas Instruments literature numbers SLMA002 (www.ti.com/lit/slma002) and SLMA004 (www.ti.com/lit/slma004).
9. Size of metal pad may vary due to creepage requirement.
10. Vias are optional depending on application, refer to device data sheet. If any vias are implemented, refer to their locations shown on this view. It is recommended that vias under paste be filled, plugged or tented.

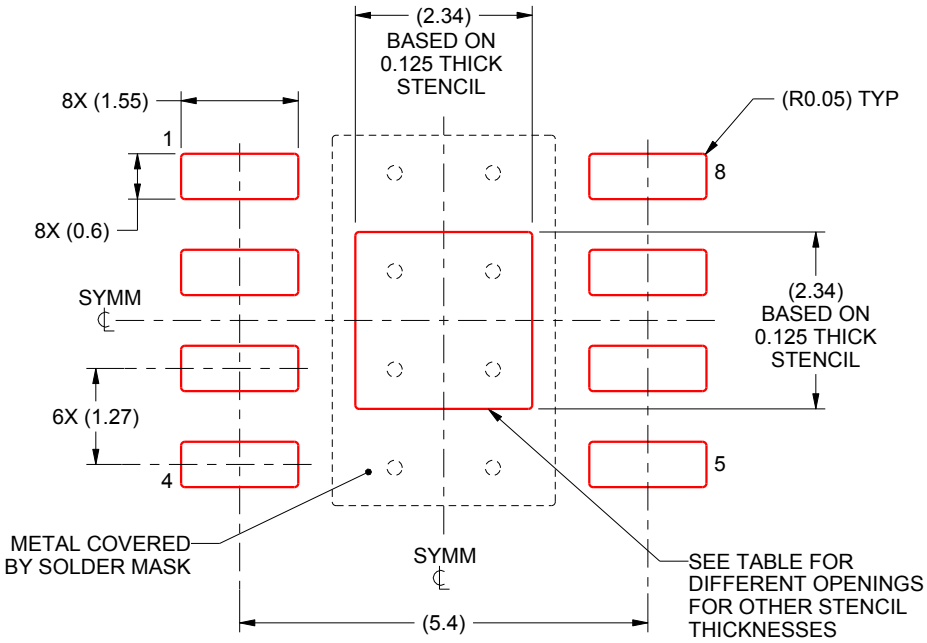

SOLDER PASTE EXAMPLE
EXPOSED PAD
100% PRINTED SOLDER COVERAGE BY AREA
SCALE:10X

STENCIL THICKNESS	SOLDER STENCIL OPENING
0.1	2.62 X 2.62
0.125	2.34 X 2.34 (SHOWN)
0.150	2.14 X 2.14
0.175	1.98 X 1.98

4218825/A 05/2016

NOTES: (continued)

11. Laser cutting apertures with trapezoidal walls and rounded corners may offer better paste release. IPC-7525 may have alternate design recommendations.
12. Board assembly site may have different recommendations for stencil design.

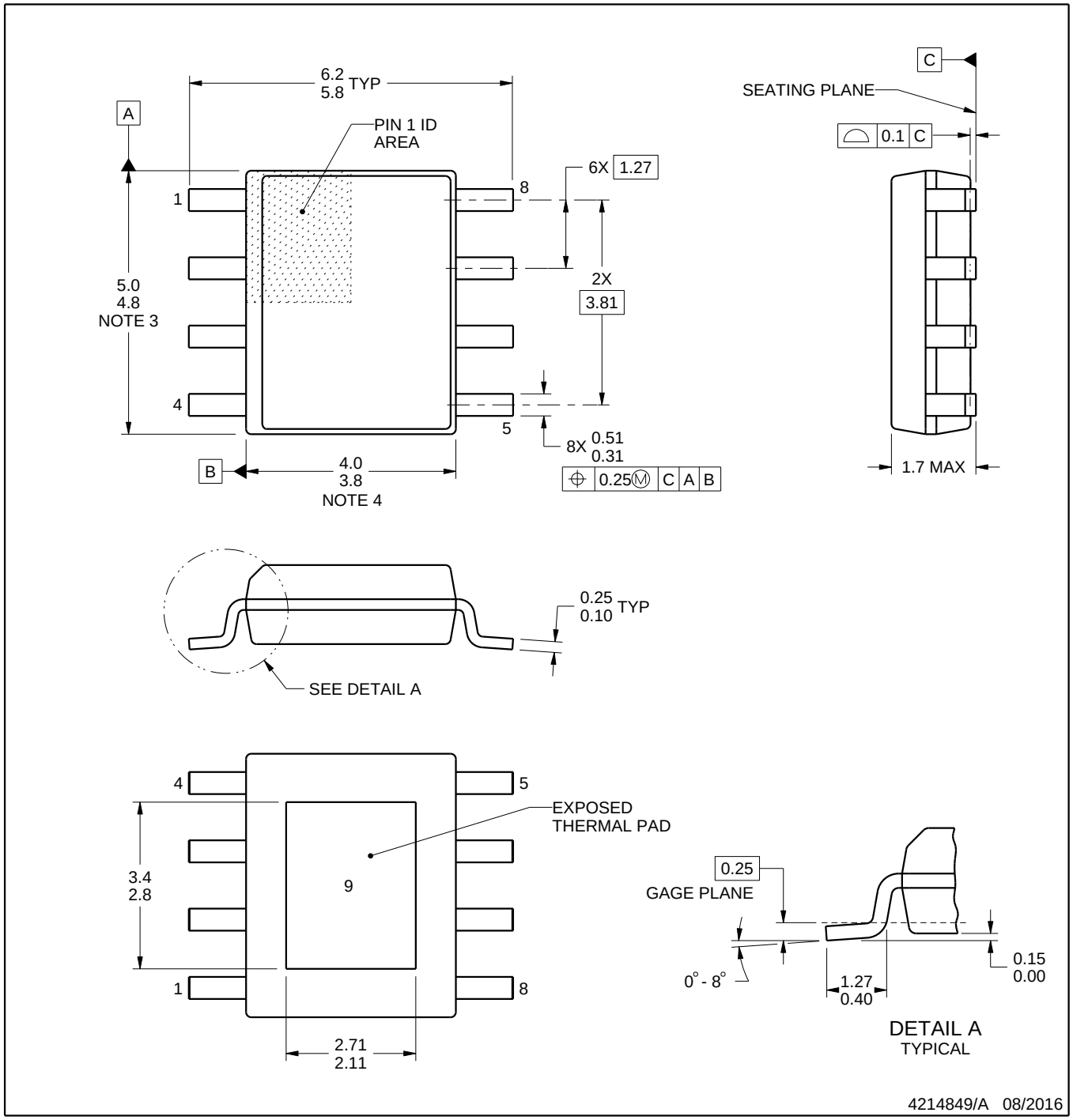

PowerPAD is a trademark of Texas Instruments.

NOTES:

1. All linear dimensions are in millimeters. Any dimensions in parenthesis are for reference only. Dimensioning and tolerancing per ASME Y14.5M.
2. This drawing is subject to change without notice.
3. This dimension does not include mold flash, protrusions, or gate burrs. Mold flash, protrusions, or gate burrs shall not exceed 0.15 mm per side.
4. This dimension does not include interlead flash. Interlead flash shall not exceed 0.25 mm per side.
5. Reference JEDEC registration MS-012.

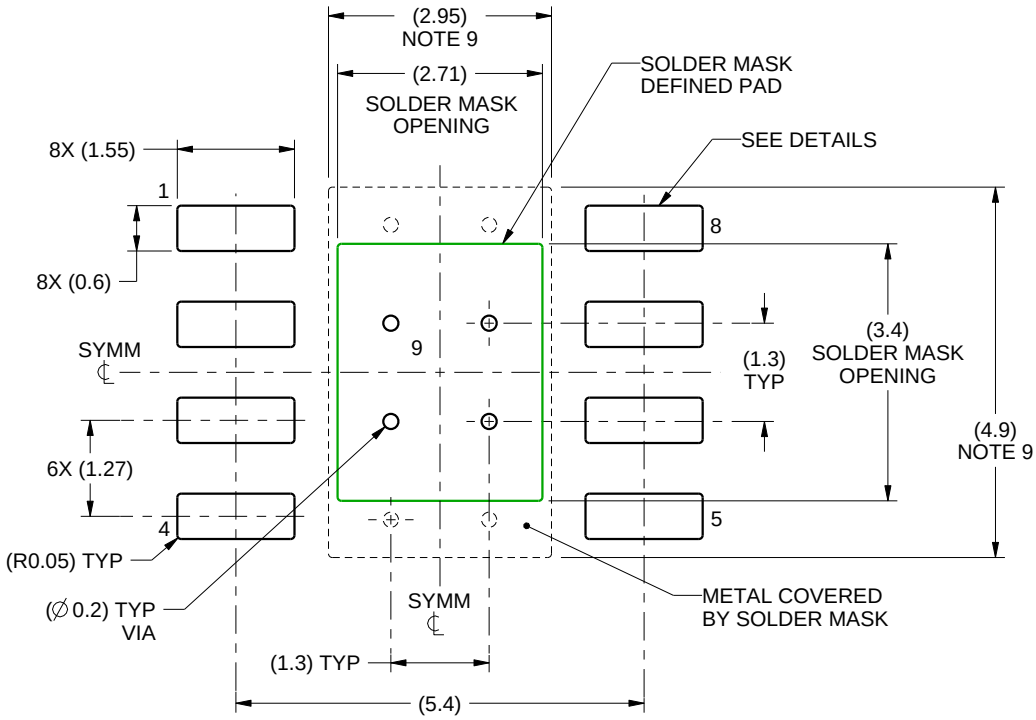

LAND PATTERN EXAMPLE
SCALE:10X

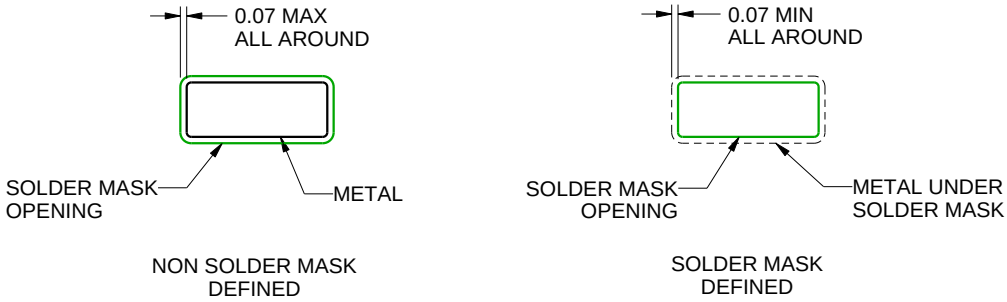

SOLDER MASK DETAILS
PADS 1-8

4214849/A 08/2016

NOTES: (continued)

6. Publication IPC-7351 may have alternate designs.
7. Solder mask tolerances between and around signal pads can vary based on board fabrication site.
8. This package is designed to be soldered to a thermal pad on the board. For more information, see Texas Instruments literature numbers SLMA002 (www.ti.com/lit/slma002) and SLMA004 (www.ti.com/lit/slma004).
9. Size of metal pad may vary due to creepage requirement.
10. Vias are optional depending on application, refer to device data sheet. If any vias are implemented, refer to their locations shown on this view. It is recommended that vias under paste be filled, plugged or tented.

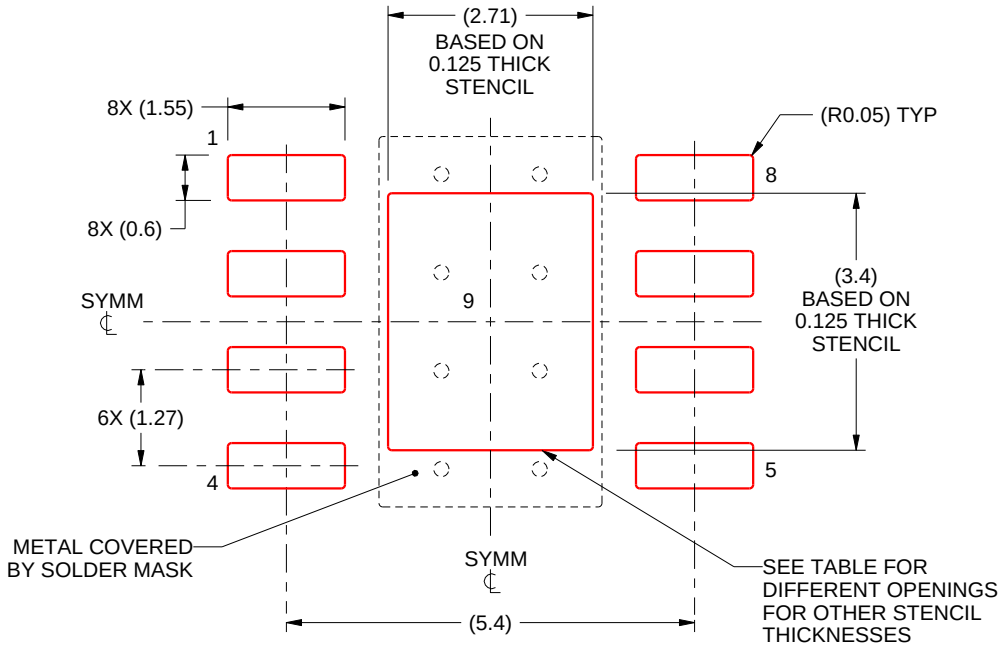

SOLDER PASTE EXAMPLE
EXPOSED PAD
100% PRINTED SOLDER COVERAGE BY AREA
SCALE:10X

STENCIL THICKNESS	SOLDER STENCIL OPENING
0.1	3.03 X 3.80
0.125	2.71 X 3.40 (SHOWN)
0.150	2.47 X 3.10
0.175	2.29 X 2.87

4214849/A 08/2016

NOTES: (continued)

11. Laser cutting apertures with trapezoidal walls and rounded corners may offer better paste release. IPC-7525 may have alternate design recommendations.
12. Board assembly site may have different recommendations for stencil design.

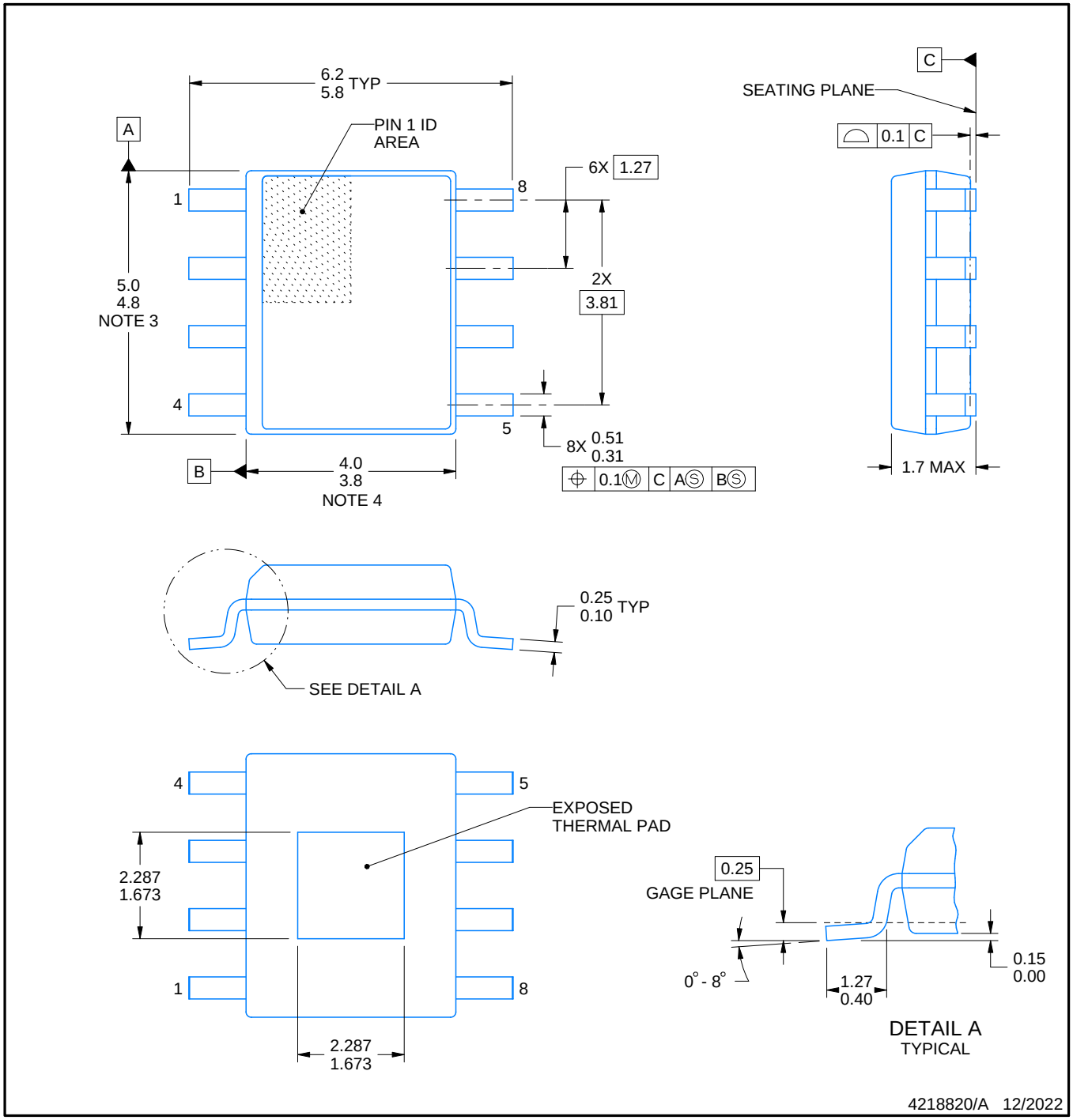

PowerPAD is a trademark of Texas Instruments.

NOTES:

1. All linear dimensions are in millimeters. Any dimensions in parenthesis are for reference only. Dimensioning and tolerancing per ASME Y14.5M.
2. This drawing is subject to change without notice.
3. This dimension does not include mold flash, protrusions, or gate burrs. Mold flash, protrusions, or gate burrs shall not exceed 0.15 mm per side.
4. This dimension does not include interlead flash. Interlead flash shall not exceed 0.25 mm per side.
5. Reference JEDEC registration MS-012, variation BA.

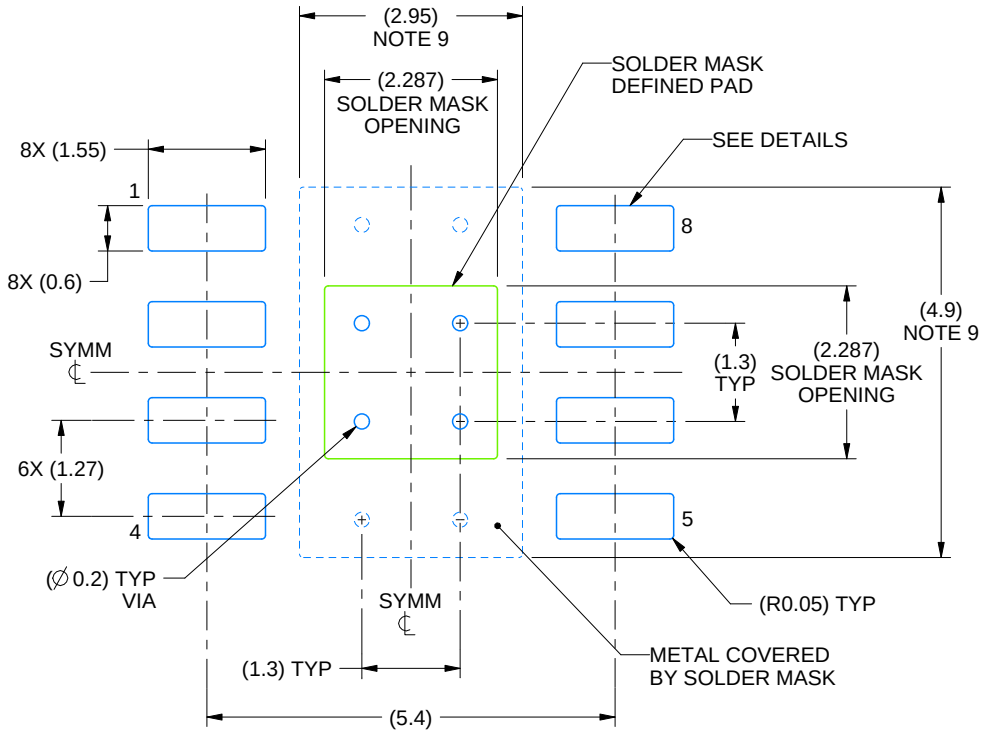

LAND PATTERN EXAMPLE
SCALE:10X

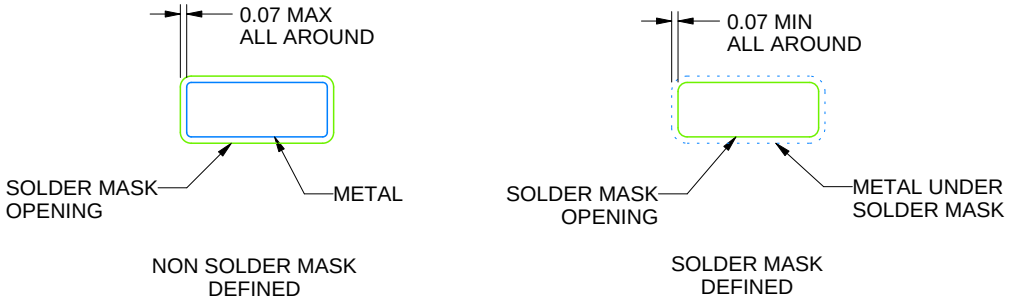

SOLDER MASK DETAILS

4218820/A 12/2022

NOTES: (continued)

6. Publication IPC-7351 may have alternate designs.
7. Solder mask tolerances between and around signal pads can vary based on board fabrication site.
8. This package is designed to be soldered to a thermal pad on the board. For more information, see Texas Instruments literature numbers SLMA002 (www.ti.com/lit/slma002) and SLMA004 (www.ti.com/lit/slma004).
9. Size of metal pad may vary due to creepage requirement.

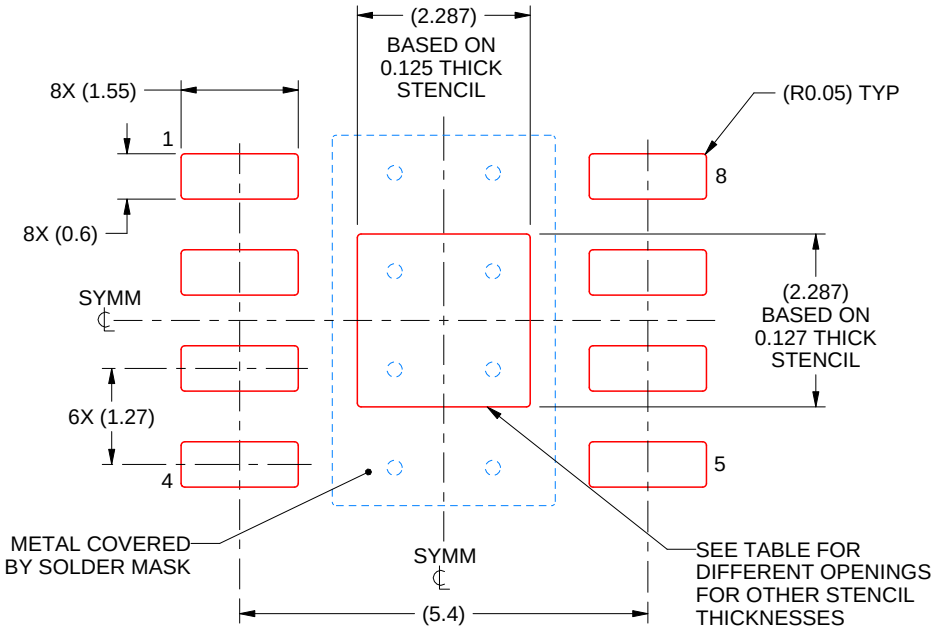

SOLDER PASTE EXAMPLE
EXPOSED PAD
100% PRINTED SOLDER COVERAGE BY AREA
SCALE:10X

STENCIL THICKNESS	SOLDER STENCIL OPENING
0.1	2.557 X 2.557
0.125	2.287 X 2.287 (SHOWN)
0.150	2.088 X 2.088
0.175	1.933 X 1.933

4218820/A 12/2022

NOTES: (continued)

10. Laser cutting apertures with trapezoidal walls and rounded corners may offer better paste release. IPC-7525 may have alternate design recommendations.
11. Board assembly site may have different recommendations for stencil design.

IMPORTANT NOTICE AND DISCLAIMER

TI PROVIDES TECHNICAL AND RELIABILITY DATA (INCLUDING DATA SHEETS), DESIGN RESOURCES (INCLUDING REFERENCE DESIGNS), APPLICATION OR OTHER DESIGN ADVICE, WEB TOOLS, SAFETY INFORMATION, AND OTHER RESOURCES “AS IS” AND WITH ALL FAULTS, AND DISCLAIMS ALL WARRANTIES, EXPRESS AND IMPLIED, INCLUDING WITHOUT LIMITATION ANY IMPLIED WARRANTIES OF MERCHANTABILITY, FITNESS FOR A PARTICULAR PURPOSE OR NON-INFRINGEMENT OF THIRD PARTY INTELLECTUAL PROPERTY RIGHTS.

These resources are intended for skilled developers designing with TI products. You are solely responsible for (1) selecting the appropriate TI products for your application, (2) designing, validating and testing your application, and (3) ensuring your application meets applicable standards, and any other safety, security, regulatory or other requirements.

These resources are subject to change without notice. TI grants you permission to use these resources only for development of an application that uses the TI products described in the resource. Other reproduction and display of these resources is prohibited. No license is granted to any other TI intellectual property right or to any third party intellectual property right. TI disclaims responsibility for, and you will fully indemnify TI and its representatives against, any claims, damages, costs, losses, and liabilities arising out of your use of these resources.

TI’s products are provided subject to TI’s Terms of Sale or other applicable terms available either on ti.com or provided in conjunction with such TI products. TI’s provision of these resources does not expand or otherwise alter TI’s applicable warranties or warranty disclaimers for TI products.

TI objects to and rejects any additional or different terms you may have proposed.

Mailing Address: Texas Instruments, Post Office Box 655303, Dallas, Texas 75265
Copyright © 2025, Texas Instruments Incorporated