SN74LVC1T45 Single-Bit Dual-Supply Bus Transceiver With Configurable Voltage Translation and 3-State Outputs

1 Features

- ESD protection exceeds JESD 22:
  - 2000V Human-Body Model (A114-A)
  - 200V Machine Model (A115-A)
  - 1000V Charged-Device Model (C101)
- Available in the Texas Instruments NanoFree™ package
- Fully configurable dual-rail design allows each port to operate over the full 1.65V to 5.5V power-supply range
- V_{CC} isolation feature – if either V_{CC} input is at GND, both ports are in the high-impedance state
- DIR input circuit referenced to V_{CCA}
- Low power consumption, 4µA maximum I_{CC}
- ±24mA output drive at 3.3V
- I_{off} supports partial-power-down mode operation
- Maximum data rates
  - 420Mbps (3.3V to 5V translation)
  - 210Mbps (translate to 3.3V)
  - 140Mbps (translate to 2.5V)
  - 75Mbps (translate to 1.8V)
- Latch-up performance exceeds 100mA per JESD 78, Class II

2 Applications

- Personal electronic
- Industrial
- Enterprise
- Telecom

Functional Block Diagram

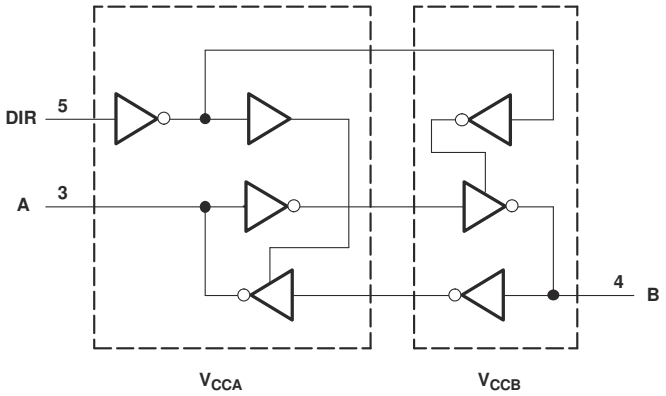

3 Description

This single-bit noninverting bus transceiver uses two separate configurable power-supply rails. The A port is designed to track V_{CCA}. V_{CCA} accepts any supply voltage from 1.65V to 5.5V. The B port is designed to track V_{CCB}. V_{CCB} accepts any supply voltage from 1.65V to 5.5V. This allows for universal low-voltage bidirectional translation between any of the 1.8V, 2.5V, 3.3V, and 5V voltage nodes.

The SN74LVC1T45 is designed for asynchronous communication between two data buses. The logic levels of the direction-control (DIR) input activate either the B-port outputs or the A-port outputs. The device transmits data from the A bus to the B bus when the B-port outputs are activated and from the B bus to the A bus when the A-port outputs are activated. The input circuitry is always active on both A and B ports and must have a logic HIGH or LOW level applied to prevent excess I_{CC} and I_{CCZ}.

The SN74LVC1T45 is designed so that the DIR input is powered by V_{CCA}. This device is fully specified for partial-power-down applications using I_{off}. The I_{off} circuitry disables the outputs, preventing damaging current backflow through the device when it is powered down. The V_{CC} isolation feature is designed so that if either V_{CC} input is at GND, then both ports are in the high-impedance state.

NanoFree™ package technology is a major breakthrough in IC packaging concepts, using the die as the package.

Package Information

PART NUMBER	PACKAGE(1)	PACKAGE SIZE(2)
SN74LVC1T45	DRL (SOT, 6)	1.6mm × 1.6mm
	DBV (SOT-23, 6)	2.9mm × 2.8mm
	DCK (SC70, 6)	2mm × 2.1mm
	DPK (USON, 6)	1.6mm × 1.6mm
	YZP (DSBGA, 6)	1mm × 0.5mm

(1) For more information, see Section 11.
(2) The package size (length × width) is a nominal value and includes pins, where applicable.

An IMPORTANT NOTICE at the end of this data sheet addresses availability, warranty, changes, use in safety-critical applications, intellectual property matters and other important disclaimers. PRODUCTION DATA.

Table of Contents

1 Features.....1
2 Applications.....1
3 Description.....1
4 Pin Configuration and Functions.....2
5 Specifications.....4
5.1 Absolute Maximum Ratings.....4
5.2 ESD Ratings.....4
5.3 Recommended Operating Conditions.....4
5.4 Thermal Information.....5
5.5 Electrical Characteristics.....6
5.6 Switching Characteristics (V_{CCA} = 1.8V ± 0.15V).....7
5.7 Switching Characteristics (V_{CCA} = 2.5V ± 0.2V).....7
5.8 Switching Characteristics (V_{CCA} = 3.3V ± 0.3V).....8
5.9 Switching Characteristics (V_{CCA} = 5V ±0.5V).....8
5.10 Operating Characteristics.....9
5.11 Typical Characteristics.....10
6 Parameter Measurement Information.....12
7 Detailed Description.....13
7.1 Overview.....13
7.2 Functional Block Diagram.....13
7.3 Feature Description.....13
7.4 Device Functional Modes.....14
8 Applications and Implementation.....15
8.1 Application Information.....15
8.2 Typical Application.....15
8.3 Power Supply Recommendations.....17
8.4 Layout.....17
9 Device and Documentation Support.....19
9.1 Documentation Support.....19
9.2 Receiving Notification of Documentation Updates.....19
9.3 Support Resources.....19
9.4 Trademarks.....19
9.5 Electrostatic Discharge Caution.....19
9.6 Glossary.....19
10 Revision History.....19
11 Mechanical, Packaging, and Orderable Information.....20

4 Pin Configuration and Functions

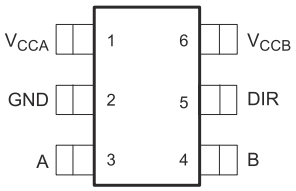

Figure 4-1. DBV Package, 6-Pin SOT-23 (Top View)

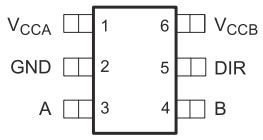

Figure 4-2. DCK Package, 6-Pin SC70 (Top View)

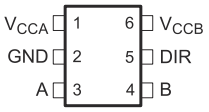

Figure 4-3. DRL Package, 6-Pin SOT (Top View)

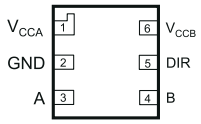

Figure 4-4. DPK Package, 6-Pin USON (Top View)

Table 4-1. Pin Functions

PIN		TYPE(1)	DESCRIPTION
NAME	DBV, DCK, DRL, DPK		
V_{CCA}	1	P	SYSTEM-1 supply voltage (1.65V to 5.5V)
GND	2	G	Device GND
A	3	I/O	Output level depends on V_{CC1} voltage.
B	4	I/O	Input threshold value depends on V_{CC2} voltage.
DIR	5	I	GND (low level) determines B-port to A-port direction.
V_{CCB}	6	P	SYSTEM-2 supply voltage (1.65V to 5.5V)

(1) P = power, G = ground, I/O = input and output, I = input

Copyright © 2024 Texas Instruments Incorporated

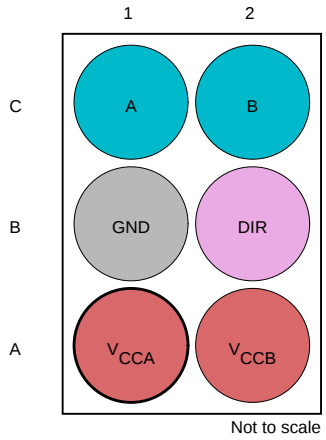

Figure 4-5. YZP Package, 6-Pin DSBGA (Bottom View)

Legend	
Power	Input
Input or Output	Ground

Table 4-2. Pin Functions

PIN		TYPE[(1)]	DESCRIPTION
NO.	NAME		
A1	V_{CCA}	P	SYSTEM-1 supply voltage (1.65V to 5.5V)
A2	V_{CCB}	P	SYSTEM-2 supply voltage (1.65V to 5.5V)
B1	GND	G	Device GND
B2	DIR	I	GND (low level) determines B-port to A-port direction.
C1	A	I/O	Output level depends on V_{CC1} voltage.
C2	B	I/O	Input threshold value depends on V_{CC2} voltage.

(1) P = power, G = ground, I/O = input and output, I = input

Copyright © 2024 Texas Instruments Incorporated

5 Specifications

5.1 Absolute Maximum Ratings

over operating free-air temperature range (unless otherwise noted) [1]

			MIN	MAX	UNIT
V_{CCA} V_{CCB}	Supply voltage		–0.5	6.5	V
V_I	Input voltage[2]		–0.5	6.5	V
V_O	Voltage range applied to any output in the high-impedance or power-off state[2]		–0.5	6.5	V
V_O	Voltage range applied to any output in the high or low state[2] [3]	A port	–0.5	V_{CCA} + 0.5	V
		B port	–0.5	V_{CCB} + 0.5	
I_{IK}	Input clamp current	V_I < 0		–50	mA
I_{OK}	Output clamp current	V_O < 0		–50	mA
I_O	Continuous output current			±50	mA
	Continuous current through V_{CC} or GND			±100	mA
T_J	Junction temperature			150	°C
T_{stg}	Storage temperature		–65	150	°C

(1) Stresses beyond those listed under *Absolute Maximum Ratings* may cause permanent damage to the device. These are stress ratings only, which do not imply functional operation of the device at these or any other conditions beyond those indicated under *Recommended Operating Conditions*. Exposure to absolute-maximum-rated conditions for extended periods may affect device reliability.
(2) The input and output negative-voltage ratings may be exceeded if the input and output clamp-current ratings are observed.
(3) The value of V_{CC} is provided in the *Recommended Operating Conditions* table.

5.2 ESD Ratings

		VALUE	UNIT
$V_{(ESD)}$ Electrostatic discharge	Human-body model (HBM), per ANSI/ESDA/JEDEC JS-001[1]	±2000	V
	Charged-device model (CDM), per JEDEC specification JESD22-C101[2]	±1000	
	Machine Model	±200	

(1) JEDEC document JEP155 states that 500V HBM allows safe manufacturing with a standard ESD control process.
(2) JEDEC document JEP157 states that 250V CDM allows safe manufacturing with a standard ESD control process.

5.3 Recommended Operating Conditions

See [1] [2] [3]

			V_{CCI}	V_{CCO}	MIN	MAX	UNIT
V_{CCA}	Supply voltage				1.65	5.5	V
V_{CCB}					1.65	5.5	
V_{IH}	High-level input voltage	Data inputs[4]	1.65 o 1.95V		V_{CCI} × 0.65		V
			2.3 to 2.7V		1.7		
			3 to 3.6V		2		
			4.5 to 5.5V		V_{CCI} × 0.7		
V_{IL}	Low-level input voltage	Data inputs[4]	1.65 o 1.95V			V_{CCI} × 0.35	V
			2.3 to 2.7V			0.7	
			3 to 3.6V			0.8	
			4.5 to 5.5V			V_{CCI} × 0.3	
V_{IH}	High-level input voltage	DIR (referenced to V_{CCA})[5]	1.65 to 1.95V		V_{CCA} × 0.65		V
			2.3 to 2.7V		1.7		
			3 to 3.6V		2		
			4.5 to 5.5V		V_{CCA} × 0.7		

Copyright © 2024 Texas Instruments Incorporated

5.3 Recommended Operating Conditions (continued)

See [(1)] [(2)] [(3)]

			V_{CCI}	V_{CCO}	MIN	MAX	UNIT
V_{IL}	Low-level input voltage	DIR (referenced to V_{CCA})[(5)]	1.65 to 1.95V			V_{CCA} × 0.35	V
			2.3 to 2.7V			0.7	
			3 to 3.6V			0.8	
			4.5 to 5.5V			V_{CCA} × 0.3	
V_I	Input voltage				0	5.5	V
V_O	Output voltage				0	V_{CCO}	V
I_{OH}	High-level output current			1.65 to 1.95V		–4	mA
				2.3 to 2.7V		–8	
				3 to 3.6V		–24	
				4.5 to 5.5V		–32	
I_{OL}	Low-level output current			1.65 to 1.95V		4	mA
				2.3 to 2.7V		8	
				3 to 3.6V		24	
				4.5 to 5.5V		32	
Δt/Δv	Input transition rise or fall rate	Data inputs	1.65 to 1.95V			20	ns/V
			2.3 to 2.7V			20	
			3 to 3.6V			10	
			4.5 to 5.5V			5	
		Control inputs	1.65 to 5.5V			5	
T_A	Operating free-air temperature				–40	85	°C

(1) V_{CCI} is the V_{CC} associated with the input port.
(2) V_{CCO} is the V_{CC} associated with the output port.
(3) All unused data inputs of the device must be held at V_{CCI} or GND to ensure proper device operation. See the TI application report, *Implications of Slow or Floating CMOS Inputs*, SCBA004.
(4) For V_{CCI} values not specified in the data sheet, V_{IH} min = V_{CCI} × 0.7V, V_{IL} max = V_{CCI} × 0.3V.
(5) For V_{CCI} values not specified in the data sheet, V_{IH} min = V_{CCA} × 0.7V, V_{IL} max = V_{CCA} × 0.3V.

5.4 Thermal Information

THERMAL METRIC[(1)]		SN74LVC1T45					UNIT
		DBV (SOT-23)	DCK (SC70)	DPK (USON)	DRL (SOT)	YZP (DSBGA)	
		6 PINS					
$R_{\theta JA}$	Junction-to-ambient thermal resistance	215.1	210.9	278.3	223.7	131.0	°C/W
$R_{\theta JC(top)}$	Junction-to-case (top) thermal resistance	136.5	139.2	133.4	88.7	1.3	°C/W
$R_{\theta JB}$	Junction-to-board thermal resistance	96.6	72	174.1	58.4	22.6	°C/W
ψ_{JT}	Junction-to-top characterization parameter	71.5	54.9	23.4	5.9	5.2	°C/W
ψ_{JB}	Junction-to-board characterization parameter	96.3	71.7	173.5	58.1	22.6	°C/W

(1) For more information about traditional and new thermal metrics, see the *Semiconductor and IC Package Thermal Metrics* application report.

5.5 Electrical Characteristics

over recommended operating free-air temperature range, T_A = –40 to +85°C (unless otherwise noted)[(1) (2)]

PARAMETER		TEST CONDITIONS		V_{CCA}	V_{CCB}		MIN	TYP	MAX	UNIT
V_{OH}		I_{OH} = –100µA	$V_I = V_{IH}$	1.65 to 4.5V	1.65 to 4.5V		V_{CCO} – 0.1			V
		I_{OH} = –4mA		1.65V	1.65V		1.2			
		I_{OH} = –8mA		2.3V	2.3V		1.9			
		I_{OH} = –24mA		3V	3V		2.4			
		I_{OH} = –32mA		4.5V	4.5V		3.8			
V_{OL}		I_{OL} = 100µA	$V_I = V_{IL}$	1.65 to 4.5V	1.65 to 4.5V				0.1	V
		I_{OL} = 4mA		1.65V	1.65V				0.45	
		I_{OL} = 8mA		2.3V	2.3V				0.3	
		I_{OL} = 24mA		3V	3V				0.55	
		I_{OL} = 32mA		4.5V	4.5V				0.55	
I_I	DIR	$V_I = V_{CCA}$ or GND		1.65 to 5.5V	1.65 to 5.5V	T_A = 25 °C			±1	µA
						T_A = –40 to +85°C			±2	
I_{off}	A port	V_I or V_O = 0 to 5.5V		0V	0 to 5.5V	T_A = 25 °C			±1	µA
						T_A = –40 to +85°C			±2	
	B port			0 to 5.5V	0V	T_A = 25 °C			±1	
						T_A = –40 to +85°C			±2	
I_{OZ}	A or B port	$V_O = V_{CCO}$ or GND		1.65 to 5.5V	1.65 to 5.5V	T_A = 25 °C			±1	µA
						T_A = –40 to +85°C			±2	
I_{CCA}		$V_I = V_{CCI}$ or GND, I_O = 0		1.65 to 5.5V	1.65 to 5.5V				3	µA
				5.5V	0V				2	
				0V	5.5V				–2	
I_{CCB}		$V_I = V_{CCI}$ or GND, I_O = 0		1.65 to 5.5V	1.65 to 5.5V				3	µA
				5.5V	0V				–2	
				0V	5.5V				2	
I_{CCA} + I_{CCB} (see Table 7-1)		$V_I = V_{CCI}$ or GND, I_O = 0		1.65 to 5.5V	1.65 to 5.5V				4	µA
ΔI_{CCA}	A port	A port at V_{CCA} – 0.6V, DIR at V_{CCA}, B port = open		3 to 5.5V	3 to 5.5V				50	µA
	DIR	DIR at V_{CCA} – 0.6V, B port = open, A port at V_{CCA} or GND							50	
ΔI_{CCB}	B port	B port at V_{CCB} – 0.6V, DIR at GND, A port = open		3 to 5.5V	3 to 5.5V				50	µA
C_i	DIR	$V_I = V_{CCA}$ or GND		3.3V	3.3V	T_A = 25 °C		2.5		pF
C_{io}	A or B port	$V_O = V_{CCA/B}$ or GND		3.3V	3.3V	T_A = 25 °C		6		pF

(1) V_{CCO} is the V_{CC} associated with the output port.
(2) V_{CCI} is the V_{CC} associated with the input port.

Copyright © 2024 Texas Instruments Incorporated

5.6 Switching Characteristics (V_{CCA} = 1.8V ± 0.15V)

over recommended operating free-air temperature range, V_{CCA} = 1.8V ± 0.15V (see Figure 6-1)

PARAMETER	FROM (INPUT)	TO (OUTPUT)	V_{CCB} = 1.8V ±0.15V		V_{CCB} = 2.5V ±0.2V		V_{CCB} = 3.3V ±0.3V		V_{CCB} = 5V ±0.5V		UNIT
			MIN	MAX	MIN	MAX	MIN	MAX	MIN	MAX	
t_{PLH}	A	B	3	17.7	2.2	10.3	1.7	8.3	1.4	7.2	ns
t_{PHL}			2.8	14.3	2.2	8.5	1.8	7.1	1.7	7	
t_{PLH}	B	A	3	17.7	2.3	16	2.1	15.5	1.9	15.1	ns
t_{PHL}			2.8	14.3	2.1	12.9	2	12.6	1.8	12.2	
t_{PHZ}	DIR	A	5.2	19.4	4.8	18.5	4.7	18.4	5.1	17.1	ns
t_{PLZ}			2.3	10.5	2.1	10.5	2.4	10.7	3.1	10.9	
t_{PHZ}	DIR	B	5.2	21.9	4.9	11.5	4.6	10.3	2.8	8.2	ns
t_{PLZ}			4.2	16	3.7	9.2	3.3	8.4	2.4	6.4	
t_{PZH} (1)	DIR	A		33.7		25.2		23.9		21.5	ns
t_{PZL} (1)				36.2		24.4		22.9		20.4	
t_{PZH} (1)	DIR	B		28.2		20.8		19		18.1	ns
t_{PZL} (1)				33.7		27		25.5		24.1	

(1) The enable time is a calculated value, derived using the formula shown in the *Enable Times* section.

5.7 Switching Characteristics (V_{CCA} = 2.5V ± 0.2V)

over recommended operating free-air temperature range, V_{CCA} = 2.5V ± 0.2V (see Figure 6-1)

PARAMETER	FROM (INPUT)	TO (OUTPUT)	V_{CCB} = 1.8V ±0.15V		V_{CCB} = 2.5V ±0.2V		V_{CCB} = 3.3V ±0.3V		V_{CCB} = 5V ±0.5V		UNIT
			MIN	MAX	MIN	MAX	MIN	MAX	MIN	MAX	
t_{PLH}	A	B	2.3	16	1.5	8.5	1.3	6.4	1.1	5.1	ns
t_{PHL}			2.1	12.9	1.4	7.5	1.3	5.4	0.9	4.6	
t_{PLH}	B	A	2.2	10.3	1.5	8.5	1.4	8	1	7.5	ns
t_{PHL}			2.2	8.5	1.4	7.5	1.3	7	0.9	6.2	
t_{PHZ}	DIR	A	3	8.1	3.1	8.1	2.8	8.1	3.2	8.1	ns
t_{PLZ}			1.3	5.9	1.3	5.9	1.3	5.9	1	5.8	
t_{PHZ}	DIR	B	5.2	23.7	4.1	11.4	3.9	10.2	2.4	7.1	ns
t_{PLZ}			3.9	18.9	3.2	9.6	2.8	8.4	1.8	5.3	
t_{PZH} (1)	DIR	A		29.2		18.1		16.4		12.8	ns
t_{PZL} (1)				32.2		18.9		17.2		13.3	
t_{PZH} (1)	DIR	B		21.9		14.4		12.3		10.9	ns
t_{PZL} (1)				21		15.6		13.5		12.7	

(1) The enable time is a calculated value, derived using the formula shown in the *Enable Times* section.

Copyright © 2024 Texas Instruments Incorporated

5.8 Switching Characteristics (V_{CCA} = 3.3V ± 0.3V)

over recommended operating free-air temperature range, V_{CCA} = 3.3V ± 0.3V (see Figure 6-1)

PARAMETER	FROM (INPUT)	TO (OUTPUT)	V_{CCB} = 1.8V ±0.15V		V_{CCB} = 2.5V ±0.2V		V_{CCB} = 3.3V ±0.3V		V_{CCB} = 5V ±0.5V		UNIT
			MIN	MAX	MIN	MAX	MIN	MAX	MIN	MAX	
t_{PLH}	A	B	2.1	15.5	1.4	8	0.7	5.8	0.7	4.4	ns
t_{PHL}			2	12.6	1.3	7	0.8	5	0.7	4	
t_{PLH}	B	A	1.7	8.3	1.3	6.4	0.7	5.8	0.6	5.4	ns
t_{PHL}			1.8	7.1	1.3	5.4	0.8	5	0.7	4.5	
t_{PHZ}	DIR	A	2.9	7.3	3	7.3	2.8	7.3	3.4	7.3	ns
t_{PLZ}			1.8	5.6	1.6	5.6	2.2	5.7	2.2	5.7	
t_{PHZ}	DIR	B	5.4	20.5	3.9	10.1	2.9	8.8	2.4	6.8	ns
t_{PLZ}			3.3	14.5	2.9	7.8	2.4	7.1	1.7	4.9	
t_{PZH} (1)	DIR	A		22.8		14.2		12.9		10.3	ns
t_{PZL} (1)				27.6		15.5		13.8		11.3	
t_{PZH} (1)	DIR	B		21.1		13.6		11.5		10.1	ns
t_{PZL} (1)				19.9		14.3		12.3		11.3	

(1) The enable time is a calculated value, derived using the formula shown in the *Enable Times* section.

5.9 Switching Characteristics (V_{CCA} = 5V ±0.5V)

over recommended operating free-air temperature range, V_{CCA} = 5V ±0.5V (see Figure 6-1)

PARAMETER	FROM (INPUT)	TO (OUTPUT)	V_{CCB} = 1.8V ±0.15V		V_{CCB} = 2.5V ±0.2V		V_{CCB} = 3.3V ±0.3V		V_{CCB} = 5V ±0.5V		UNIT
			MIN	MAX	MIN	MAX	MIN	MAX	MIN	MAX	
t_{PLH}	A	B	1.9	15.1	1	7.5	0.6	5.4	0.5	3.9	ns
t_{PHL}			1.8	12.2	0.9	6.2	0.7	4.5	0.5	3.5	
t_{PLH}	B	A	1.4	7.2	1	5.1	0.7	4.4	0.5	3.9	ns
t_{PHL}			1.7	7	0.9	4.6	0.7	4	0.5	3.5	
t_{PHZ}	DIR	A	2.1	5.4	2.2	5.4	2.2	5.5	2.2	5.4	ns
t_{PLZ}			0.9	3.8	1	3.8	0.7	3.7	0.7	3.7	
t_{PHZ}	DIR	B	4.8	20.2	2.5	9.8	1	8.5	2.5	6.5	ns
t_{PLZ}			3.2	14.8	2.5	7.4	2.5	7	1.6	4.5	
t_{PZH} (1)	DIR	A		22		12.5		11.4		8.4	ns
t_{PZL} (1)				27.2		14.4		12.5		10	
t_{PZH} (1)	DIR	B		18.9		11.3		9.1		7.6	ns
t_{PZL} (1)				17.6		11.6		10		8.6	

(1) The enable time is a calculated value, derived using the formula shown in the *Enable Times* section.

Copyright © 2024 Texas Instruments Incorporated

5.10 Operating Characteristics

T_A = 25°C

PARAMETER		TEST CONDITIONS	V_{CCA} = V_{CCB} = 1.8V	V_{CCA} = V_{CCB} = 2.5V	V_{CCA} = V_{CCB} = 3.3V	V_{CCA} = V_{CCB} = 5V	UNIT
			TYP	TYP	TYP	TYP	
C_{pdA} (1)	A-port input, B-port output	C_L = 0 pF, f = 10 MHz, t_r = t_f = 1 ns	3	4	4	4	pF
	B-port input, A-port output		18	19	20	21	
C_{pdB} (1)	A-port input, B-port output	C_L = 0 pF, f = 10 MHz, t_r = t_f = 1 ns	18	19	20	21	pF
	B-port input, A-port output		3	4	4	4	

(1) Power dissipation capacitance per transceiver

Copyright © 2024 Texas Instruments Incorporated

5.11 Typical Characteristics

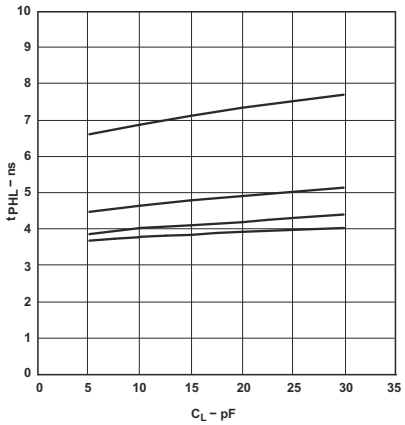

T_A = 25°C, V_{CCA} = 1.8V

Figure 5-1. Typical Propagation Delay (A to B) vs Load Capacitance

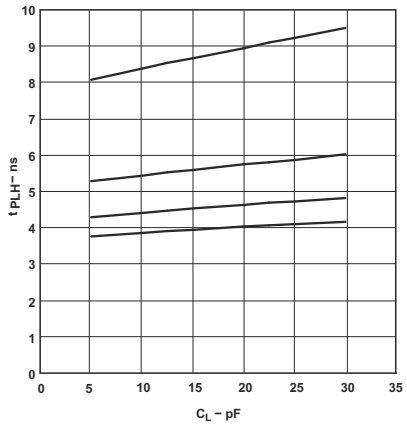

T_A = 25°C, V_{CCA} = 1.8V

Figure 5-2. Typical Propagation Delay (B to A) vs Load Capacitance

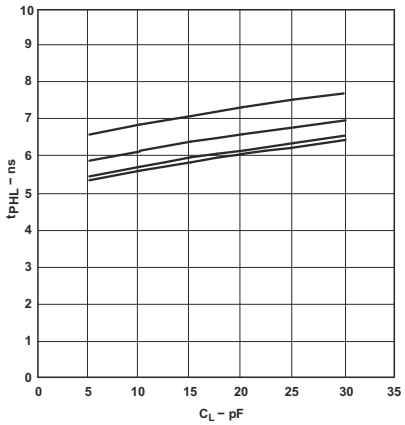

T_A = 25°C, V_{CCA} = 2.5V

Figure 5-3. Typical Propagation Delay (A to B) vs Load Capacitance

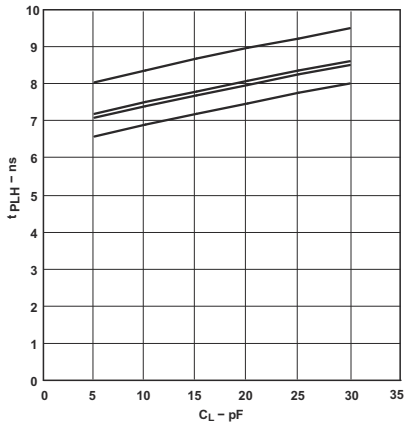

T_A = 25°C, V_{CCA} = 2.5V

Figure 5-4. Typical Propagation Delay (B to A) vs Load Capacitance

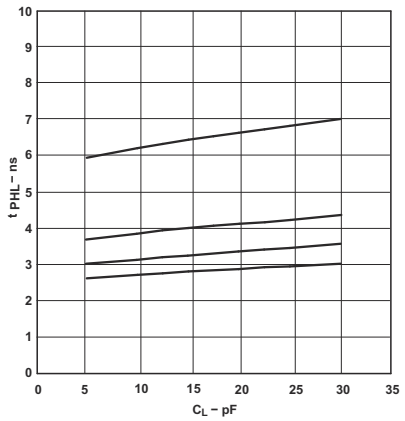

T_A = 25°C, V_{CCA} = 3.3V

Figure 5-5. Typical Propagation Delay (A to B) vs Load Capacitance

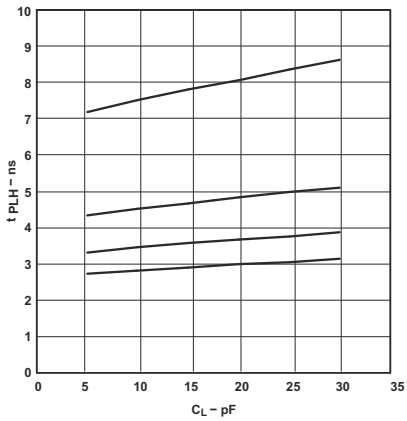

T_A = 25°C, V_{CCA} = 3.3V

Figure 5-6. Typical Propagation Delay (B to A) vs Load Capacitance

Copyright © 2024 Texas Instruments Incorporated

5.11 Typical Characteristics (continued)

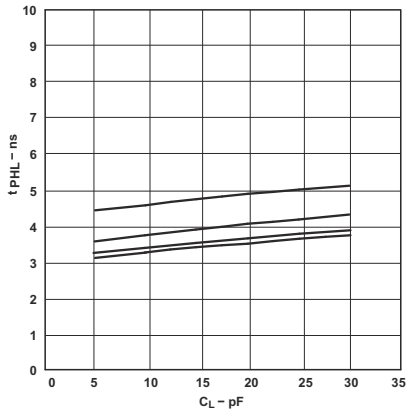

T_A = 25°C, V_{CCA} = 5V

Figure 5-7. Typical Propagation Delay (A to B) vs Load Capacitance

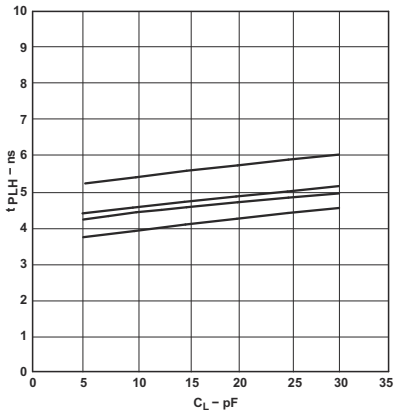

T_A = 25°C, V_{CCA} = 5V

Figure 5-8. Typical Propagation Delay (B to A) vs Load Capacitance

6 Parameter Measurement Information

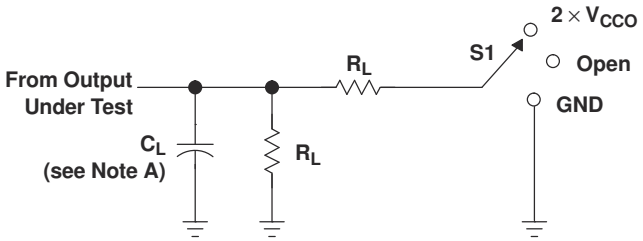

LOAD CIRCUIT

TEST	S1
t_{pd}	Open
t_{PLZ}/t_{PZL}	$2 \times V_{CCO}$
t_{PHZ}/t_{PZH}	GND

V_{CCO}	C_L	R_L	V_{TP}
1.8 V ± 0.15 V	15 pF	2 kΩ	0.15 V
2.5 V ± 0.2 V	15 pF	2 kΩ	0.15 V
3.3 V ± 0.3 V	15 pF	2 kΩ	0.3 V
5 V ± 0.5 V	15 pF	2 kΩ	0.3 V

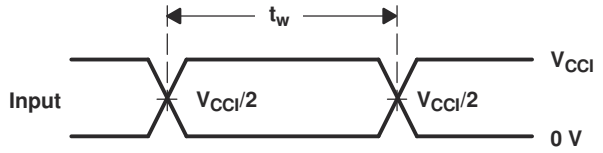

VOLTAGE WAVEFORMS
PULSE DURATION

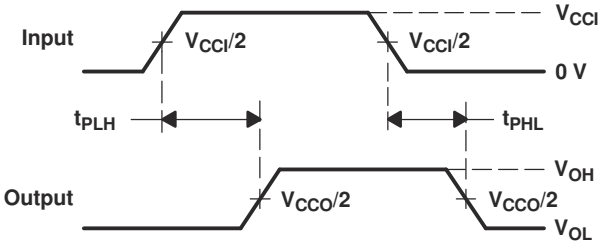

VOLTAGE WAVEFORMS
PROPAGATION DELAY TIMES

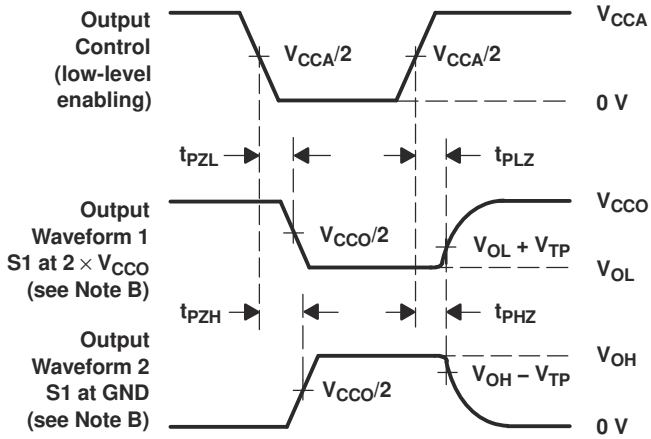

VOLTAGE WAVEFORMS
ENABLE AND DISABLE TIMES

NOTES:
A. C_L includes probe and jig capacitance.
B. Waveform 1 is for an output with internal conditions such that the output is low, except when disabled by the output control. Waveform 2 is for an output with internal conditions such that the output is high, except when disabled by the output control.
C. All input pulses are supplied by generators having the following characteristics: PRR ≤ 10 MHz, Z_O = 50 Ω, dv/dt ≥ 1 V/ns.
D. The outputs are measured one at a time, with one transition per measurement.
E. t_{PLZ} and t_{PHZ} are the same as t_{dis}.
F. t_{PZL} and t_{PZH} are the same as t_{en}.
G. t_{PLH} and t_{PHL} are the same as t_{pd}.
H. V_{CCI} is the V_{CC} associated with the input port.
I. V_{CCO} is the V_{CC} associated with the output port.
J. All parameters and waveforms are not applicable to all devices.

Figure 6-1. Load Circuit and Voltage Waveforms

Copyright © 2024 Texas Instruments Incorporated

7 Detailed Description

7.1 Overview

The SN74LVC1T45 is a single-bit, dual-supply, noninverting voltage level transceiver. Pin A and the direction control pin (DIR) are supported by V_{CCA} and pin B is supported by V_{CCB}. The A port is able to accept I/O voltages ranging from 1.65V to 5.5V, while the B port can accept I/O voltages from 1.65V to 5.5V. The high on the DIR allows data transmissions from A to B and a low on the DIR allows data transmissions from B to A.

7.2 Functional Block Diagram

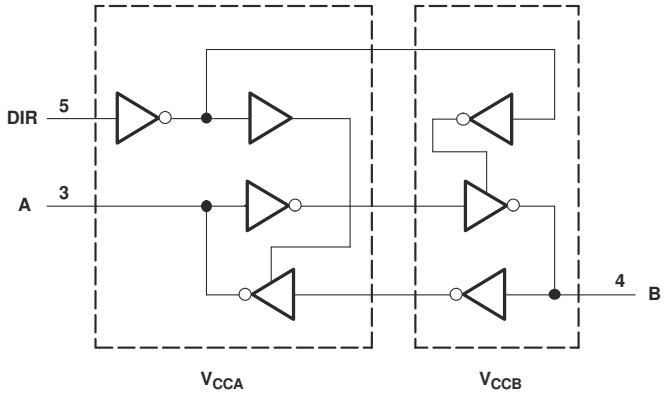

Figure 7-1. Logic Diagram (Positive Logic)

7.3 Feature Description

7.3.1 Fully Configurable Dual-Rail Design Allows Each Port to Operate Over the Full 1.65V to 5.5V Power-Supply Range

Both V_{CCA} and V_{CCB} can be supplied at any voltage between 1.65V and 5.5V, making the device suitable for translating between any of the voltage nodes (1.8V, 2.5V, 3.3V, and 5V).

7.3.2 Support High Speed Translation

The SN74LVC1T45 device supports high data rate applications. The translated signal data rate can be up to 420Mbps when the signal is translated from 3.3V to 5V.

7.3.3 I_{off} Supports Partial Power-Down Mode Operation

The inputs and outputs for this device enter a high-impedance state when the device is powered down, inhibiting current backflow into the device. The maximum leakage into or out of any input or output pin on the device is specified by I_{off} in the *Electrical Charateristics*.

7.3.4 Balanced High-Drive CMOS Push-Pull Outputs

A balanced output allows the device to sink and source similar currents. The high drive capability of this device creates fast edges into light loads so impedance matching and load conditions should be considered to prevent ringing. Additionally, the outputs of this device are capable of driving larger currents than the device can sustain without being damaged. Two outputs can be connected together for a stronger output drive strength. The electrical and thermal limits defined in the *Absolute Maximum Ratings* must be followed at all times.

7.3.5 Glitch-Free Power Supply Sequencing

Either supply rail may be powered on or off in any order without producing a glitch on the I/Os (that is, where the output erroneously transitions to VCC when it should be held low or vice versa). Glitches of this nature can be misinterpreted by a peripheral as a valid data bit, which could trigger a false device reset of the peripheral, a false device configuration of the peripheral, or even a false data initialization by the peripheral.

Copyright © 2024 Texas Instruments Incorporated

7.3.6 V_{cc} Isolation

The I/Os of both ports will enter a high-impedance state when either of the supplies are at GND, while the other supply is still connected to the device. The maximum leakage into or out of any input or output pin on the device is specified by I_{off} in the *Electrical Characteristics*.

7.4 Device Functional Modes

Table 7-1. Function Table(1)

INPUT DIR	OPERATION
L	B data to A bus
H	A data to B bus

(1) Input circuits of the data I/Os always are active.

Copyright © 2024 Texas Instruments Incorporated

8 Applications and Implementation

Note

Information in the following applications sections is not part of the TI component specification, and TI does not warrant its accuracy or completeness. TI's customers are responsible for determining suitability of components for their purposes, as well as validating and testing their design implementation to confirm system functionality.

8.1 Application Information

The SN74LVC1T45 device can be used in level-translation applications for interfacing devices or systems operating at different interface voltages with one another. The maximum data rate can be up to 420Mbps when device translates signals from 3.3V to 5V.

8.2 Typical Application

8.2.1 Unidirectional Logic Level-Shifting Application

Figure 8-1 shows an example of the SN74LVC1T45 being used in a unidirectional logic level-shifting application.

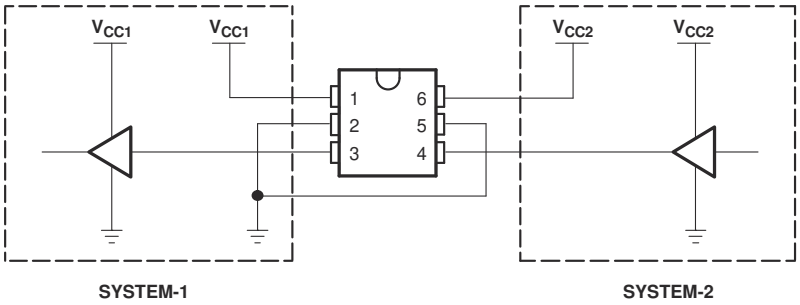

Figure 8-1. Unidirectional Logic Level-Shifting Application

8.2.1.1 Design Requirements

For this design example, use the parameters listed in Table 8-1.

Table 8-1. Design Parameters

DESIGN PARAMETER	EXAMPLE VALUE
Input voltage range	1.65V to 5.5V
Output voltage range	1.65V to 5.5V

8.2.1.2 Detailed Design Procedure

To begin the design process, determine the following:

• Input voltage range

- Use the supply voltage of the device that is driving the SN74LVC1T45 device to determine the input voltage range. For a valid logic high the value must exceed the V_{IH} of the input port. For a valid logic low the value must be less than the V_{IL} of the input port.

• Output voltage range

- Use the supply voltage of the device that the SN74LVC1T45 device is driving to determine the output voltage range.

8.2.1.3 Application Curve

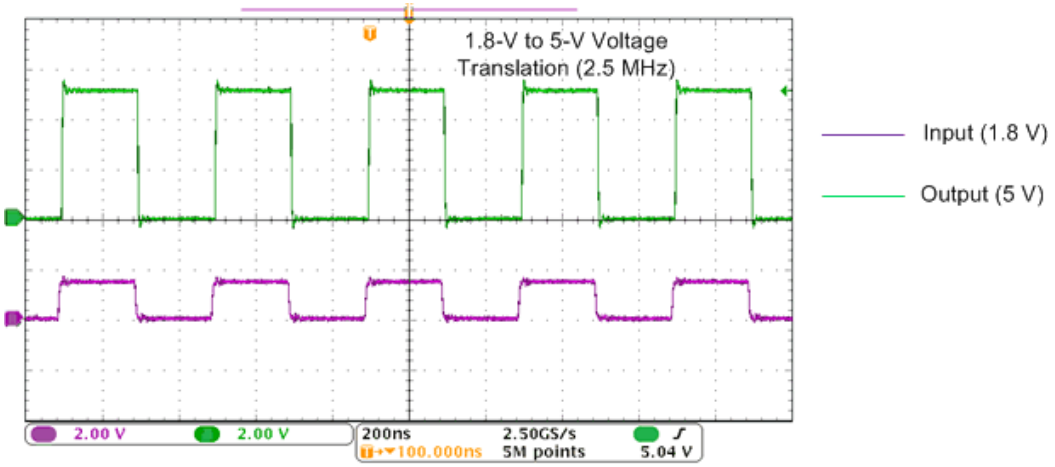

Figure 8-2. Translation Up (1.8V to 5V) at 2.5 MHz

8.2.2 Bidirectional Logic Level-Shifting Application

Figure 8-3 shows the SN74LVC1T45 being used in a bidirectional logic level-shifting application. Because the SN74LVC1T45 does not have an output-enable ($\overline{OE}$) pin, the system designer should take precautions to avoid bus contention between SYSTEM-1 and SYSTEM-2 when changing directions.

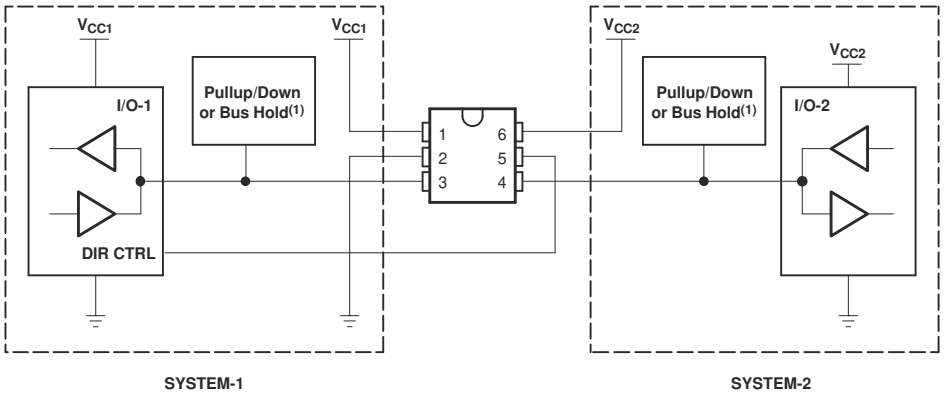

Figure 8-3. Bidirectional Logic Level-Shifting Application

8.2.2.1 Design Requirements

See *Section 8.2.1.1*.

8.2.2.2 Detailed Design Procedure

Table 8-2 shows data transmission from SYSTEM-1 to SYSTEM-2 and then from SYSTEM-2 to SYSTEM-1.

Table 8-2. SYSTEM-1 and SYSTEM-2 Data Transmission

STATE	DIR CTRL	I/O-1	I/O-2	DESCRIPTION
1	H	Out	In	SYSTEM-1 data to SYSTEM-2
2	H	Hi-Z	Hi-Z	SYSTEM-2 is getting ready to send data to SYSTEM-1. I/O-1 and I/O-2 are disabled. The bus-line state depends on pullup or pulldown.(1)
3	L	Hi-Z	Hi-Z	DIR bit is flipped. I/O-1 and I/O-2 still are disabled. The bus-line state depends on pullup or pulldown.(1)
4	L	In	Out	SYSTEM-2 data to SYSTEM-1

(1) SYSTEM-1 and SYSTEM-2 must use the same conditions, that is, both pullup or both pulldown.

Copyright © 2024 Texas Instruments Incorporated

8.2.2.2.1 Enable Times

Calculate the enable times for the SN74LVC1T45 using the following formulas:

- t_{PZH} (DIR to A) = t_{PLZ} (DIR to B) + t_{PLH} (B to A)
- t_{PZL} (DIR to A) = t_{PHZ} (DIR to B) + t_{PHL} (B to A)
- t_{PZH} (DIR to B) = t_{PLZ} (DIR to A) + t_{PLH} (A to B)
- t_{PZL} (DIR to B) = t_{PHZ} (DIR to A) + t_{PHL} (A to B)

In a bidirectional application, these enable times provide the maximum delay from the time the DIR bit is switched until an output is expected. For example, if the SN74LVC1T45 initially is transmitting from A to B, then the DIR bit is switched; the B port of the device must be disabled before presenting it with an input. After the B port has been disabled, an input signal applied to it appears on the corresponding A port after the specified propagation delay.

8.2.2.3 Application Curve

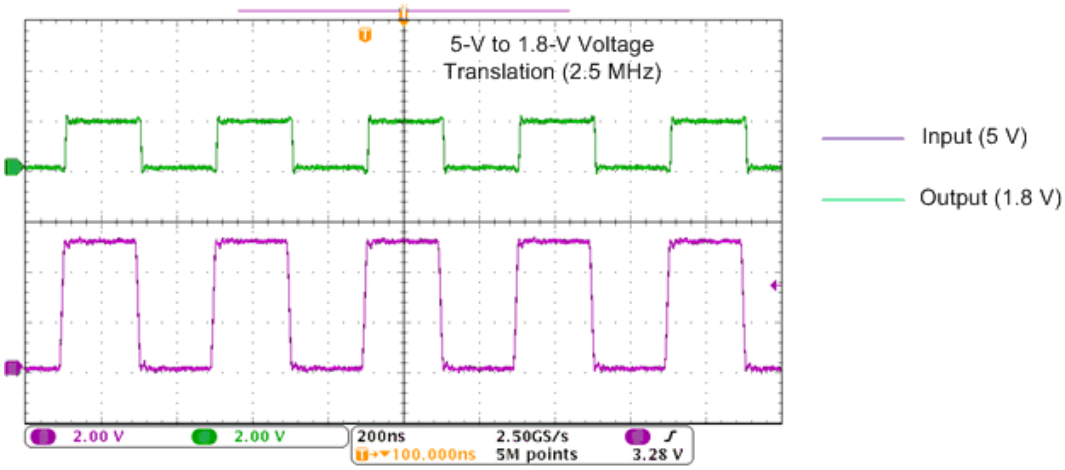

Figure 8-4. Translation Down (5V to 1.8V) at 2.5 MHz

8.3 Power Supply Recommendations

Always apply a ground reference to the GND pins first. This device is designed for glitch free power sequencing without any supply sequencing requirements such as ramp order or ramp rate.

This device was designed with various power supply sequencing methods in mind to help prevent unintended triggering of downstream devices, as described in *Glitch-free Power Supply Sequencing*.

8.4 Layout

8.4.1 Layout Guidelines

To ensure reliability of the device, the following common printed-circuit board layout guidelines are recommended:

- Bypass capacitors should be used on power supplies.
- Short trace lengths should be used to avoid excessive loading.
- Placing pads on the signal paths for loading capacitors or pullup resistors to help adjust rise and fall times of signals depends on the system requirements

Copyright © 2024 Texas Instruments Incorporated

8.4.2 Layout Example

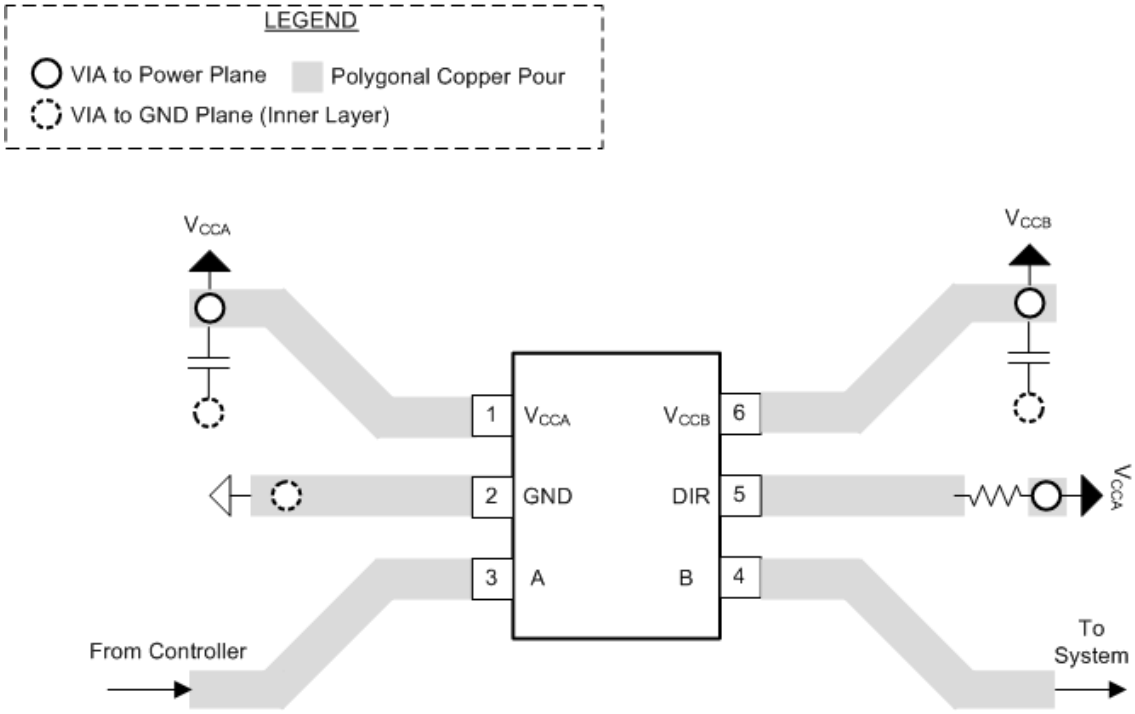

Figure 8-5. Layout Example

Copyright © 2024 Texas Instruments Incorporated

9 Device and Documentation Support

9.1 Documentation Support

9.1.1 Related Documentation

For related documentation see the following:

- Texas Instruments, *Implications of Slow or Floating CMOS Inputs*

9.2 Receiving Notification of Documentation Updates

To receive notification of documentation updates, navigate to the device product folder on ti.com. Click on *Notifications* to register and receive a weekly digest of any product information that has changed. For change details, review the revision history included in any revised document.

9.3 Support Resources

TI E2E™ support forums are an engineer's go-to source for fast, verified answers and design help — straight from the experts. Search existing answers or ask your own question to get the quick design help you need.

Linked content is provided "AS IS" by the respective contributors. They do not constitute TI specifications and do not necessarily reflect TI's views; see TI's Terms of Use.

9.4 Trademarks

NanoFree™ is a trademark of Texas Instruments.
TI E2E™ is a trademark of Texas Instruments.
All trademarks are the property of their respective owners.

9.5 Electrostatic Discharge Caution

This integrated circuit can be damaged by ESD. Texas Instruments recommends that all integrated circuits be handled with appropriate precautions. Failure to observe proper handling and installation procedures can cause damage.

ESD damage can range from subtle performance degradation to complete device failure. Precision integrated circuits may be more susceptible to damage because very small parametric changes could cause the device not to meet its published specifications.

9.6 Glossary

TI Glossary	This glossary lists and explains terms, acronyms, and definitions.

10 Revision History

NOTE: Page numbers for previous revisions may differ from page numbers in the current version.

Changes from Revision M (November 2022) to Revision N (June 2024)	Page
• Updated the *Power Supply Recommendations* section	17

Changes from Revision L (February 2017) to Revision M (November 2022)	Page
• Updated the numbering format for tables, figures, and cross-references throughout the document	1
• Updated the thermals in the *Thermal Information* section	5
• Updated the *Switching Characterisitcs* sections: extended some minimum specifications for lower delays	7
• Updated the I_{off} *Supports Partial Power-Down Mode Operation* section	13
• Added the *Balanced High-Drive CMOS Push-Pull Outputs* and V_{CC} *Isolation* sections	13

11 Mechanical, Packaging, and Orderable Information

The following pages include mechanical, packaging, and orderable information. This information is the most current data available for the designated devices. This data is subject to change without notice and revision of this document. For browser-based versions of this data sheet, refer to the left-hand navigation.

Copyright © 2024 Texas Instruments Incorporated

PACKAGING INFORMATION

Orderable part number	Status (1)	Material type (2)	Package | Pins	Package qty | Carrier	RoHS (3)	Lead finish/ Ball material (4)	MSL rating/ Peak reflow (5)	Op temp (°C)	Part marking (6)
SN74LVC1T45DBVR	Active	Production	SOT-23 (DBV) | 6	3000 | LARGE T&R	Yes	NIPDAU | SN	Level-1-260C-UNLIM	-40 to 85	(2PUH, CT15, CT1F, CT1R)
SN74LVC1T45DBVR.A	Active	Production	SOT-23 (DBV) | 6	3000 | LARGE T&R	Yes	NIPDAU	Level-1-260C-UNLIM	-40 to 85	(2PUH, CT15, CT1F, CT1R)
SN74LVC1T45DBVRE4	Active	Production	SOT-23 (DBV) | 6	3000 | LARGE T&R	Yes	NIPDAU	Level-1-260C-UNLIM	-40 to 85	(CT15, CT1F, CT1R)
SN74LVC1T45DBVRE4.A	Active	Production	SOT-23 (DBV) | 6	3000 | LARGE T&R	Yes	NIPDAU	Level-1-260C-UNLIM	-40 to 85	(CT15, CT1F, CT1R)
SN74LVC1T45DBVRG4	Active	Production	SOT-23 (DBV) | 6	3000 | LARGE T&R	Yes	NIPDAU	Level-1-260C-UNLIM	-40 to 85	(CT15, CT1F, CT1R)
SN74LVC1T45DBVRG4.A	Active	Production	SOT-23 (DBV) | 6	3000 | LARGE T&R	Yes	NIPDAU	Level-1-260C-UNLIM	-40 to 85	(CT15, CT1F, CT1R)
SN74LVC1T45DBVT	Active	Production	SOT-23 (DBV) | 6	250 | SMALL T&R	Yes	NIPDAU | SN	Level-1-260C-UNLIM	-40 to 85	(CT15, CT1F, CT1R)
SN74LVC1T45DBVT.A	Active	Production	SOT-23 (DBV) | 6	250 | SMALL T&R	Yes	NIPDAU	Level-1-260C-UNLIM	-40 to 85	(CT15, CT1F, CT1R)
SN74LVC1T45DBVTG4	Active	Production	SOT-23 (DBV) | 6	250 | SMALL T&R	Yes	NIPDAU	Level-1-260C-UNLIM	-40 to 85	(CT15, CT1F, CT1R)
SN74LVC1T45DBVTG4.A	Active	Production	SOT-23 (DBV) | 6	250 | SMALL T&R	Yes	NIPDAU	Level-1-260C-UNLIM	-40 to 85	(CT15, CT1F, CT1R)
SN74LVC1T45DCKR	Active	Production	SC70 (DCK) | 6	3000 | LARGE T&R	Yes	NIPDAU | SN | NIPDAU	Level-1-260C-UNLIM	-40 to 85	(TA5, TAF, TAR)
SN74LVC1T45DCKR.A	Active	Production	SC70 (DCK) | 6	3000 | LARGE T&R	Yes	SN	Level-1-260C-UNLIM	-40 to 85	(TA5, TAF, TAR)
SN74LVC1T45DCKR.B	Active	Production	SC70 (DCK) | 6	3000 | LARGE T&R	Yes	SN	Level-1-260C-UNLIM	-40 to 85	(TA5, TAF, TAR)
SN74LVC1T45DCKRE4	Active	Production	SC70 (DCK) | 6	3000 | LARGE T&R	Yes	NIPDAU | NIPDAU	Level-1-260C-UNLIM	-40 to 85	(TA5, TAF, TAR)
SN74LVC1T45DCKRE4	Active	Production	SC70 (DCK) | 6	3000 | LARGE T&R	No	NIPDAU | NIPDAU	Level-1-260C-UNLIM	-40 to 85	(TA5, TAF, TAR)
SN74LVC1T45DCKRE4.A	Active	Production	SC70 (DCK) | 6	3000 | LARGE T&R	Yes	NIPDAU	Level-1-260C-UNLIM	-40 to 85	(TA5, TAF, TAR)
SN74LVC1T45DCKRE4.A	Active	Production	SC70 (DCK) | 6	3000 | LARGE T&R	No	NIPDAU	Level-1-260C-UNLIM	-40 to 85	(TA5, TAF, TAR)
SN74LVC1T45DCKRE4.B	Active	Production	SC70 (DCK) | 6	3000 | LARGE T&R	Yes	NIPDAU	Level-1-260C-UNLIM	-40 to 85	(TA5, TAF, TAR)
SN74LVC1T45DCKRE4.B	Active	Production	SC70 (DCK) | 6	3000 | LARGE T&R	No	NIPDAU	Level-1-260C-UNLIM	-40 to 85	(TA5, TAF, TAR)
SN74LVC1T45DCKRG4	Active	Production	SC70 (DCK) | 6	3000 | null	No	NIPDAU | NIPDAU	Level-1-260C-UNLIM	-40 to 85	(TA5, TAF, TAR)
SN74LVC1T45DCKRG4	Active	Production	SC70 (DCK) | 6	3000 | null	Yes	NIPDAU | NIPDAU	Level-1-260C-UNLIM	-40 to 85	(TA5, TAF, TAR)
SN74LVC1T45DCKRG4.A	Active	Production	SC70 (DCK) | 6	3000 | null	Yes	NIPDAU	Level-1-260C-UNLIM	-40 to 85	(TA5, TAF, TAR)

Orderable part number	Status (1)	Material type (2)	Package | Pins	Package qty | Carrier	RoHS (3)	Lead finish/ Ball material (4)	MSL rating/ Peak reflow (5)	Op temp (°C)	Part marking (6)
SN74LVC1T45DCKRG4.A	Active	Production	SC70 (DCK) | 6	3000 | null	No	NIPDAU	Level-1-260C-UNLIM	-40 to 85	(TA5, TAF, TAR)
SN74LVC1T45DCKRG4.B	Active	Production	SC70 (DCK) | 6	3000 | null	Yes	NIPDAU	Level-1-260C-UNLIM	-40 to 85	(TA5, TAF, TAR)
SN74LVC1T45DCKRG4.B	Active	Production	SC70 (DCK) | 6	3000 | null	No	NIPDAU	Level-1-260C-UNLIM	-40 to 85	(TA5, TAF, TAR)
SN74LVC1T45DCKT	Active	Production	SC70 (DCK) | 6	250 | SMALL T&R	Yes	NIPDAU | SN	Level-1-260C-UNLIM	-40 to 85	(TA5, TAF, TAR)
SN74LVC1T45DCKT.A	Active	Production	SC70 (DCK) | 6	250 | SMALL T&R	Yes	SN	Level-1-260C-UNLIM	-40 to 85	(TA5, TAF, TAR)
SN74LVC1T45DCKT.B	Active	Production	SC70 (DCK) | 6	250 | SMALL T&R	Yes	SN	Level-1-260C-UNLIM	-40 to 85	(TA5, TAF, TAR)
SN74LVC1T45DCKTE4	Active	Production	SC70 (DCK) | 6	250 | SMALL T&R	Yes	NIPDAU	Level-1-260C-UNLIM	-40 to 85	(TA5, TAF, TAR)
SN74LVC1T45DCKTG4	Active	Production	SC70 (DCK) | 6	250 | SMALL T&R	Yes	NIPDAU | SN | NIPDAU	Level-1-260C-UNLIM	-40 to 85	(TA5, TAF, TAR)
SN74LVC1T45DCKTG4.A	Active	Production	SC70 (DCK) | 6	250 | SMALL T&R	Yes	NIPDAU	Level-1-260C-UNLIM	-40 to 85	(TA5, TAF, TAR)
SN74LVC1T45DCKTG4.B	Active	Production	SC70 (DCK) | 6	250 | SMALL T&R	Yes	NIPDAU	Level-1-260C-UNLIM	-40 to 85	(TA5, TAF, TAR)
SN74LVC1T45DPKR	Active	Production	USON (DPK) | 6	5000 | LARGE T&R	Yes	NIPDAU	Level-1-260C-UNLIM	-40 to 85	TA7
SN74LVC1T45DPKR.B	Active	Production	USON (DPK) | 6	5000 | LARGE T&R	Yes	NIPDAU	Level-1-260C-UNLIM	-40 to 85	TA7
SN74LVC1T45DPKRG4	Active	Production	USON (DPK) | 6	5000 | LARGE T&R	Yes	NIPDAU	Level-1-260C-UNLIM	-40 to 85	TA7
SN74LVC1T45DPKRG4.B	Active	Production	USON (DPK) | 6	5000 | LARGE T&R	Yes	NIPDAU	Level-1-260C-UNLIM	-40 to 85	TA7
SN74LVC1T45DRLR	Active	Production	SOT-5X3 (DRL) | 6	4000 | LARGE T&R	Yes	NIPDAU | NIPDAUAG	Level-1-260C-UNLIM	-40 to 85	(1JX, TA7, TAR)
SN74LVC1T45DRLR.A	Active	Production	SOT-5X3 (DRL) | 6	4000 | LARGE T&R	Yes	NIPDAU	Level-1-260C-UNLIM	-40 to 85	(1JX, TA7, TAR)
SN74LVC1T45DRLR.B	Active	Production	SOT-5X3 (DRL) | 6	4000 | LARGE T&R	Yes	NIPDAU	Level-1-260C-UNLIM	-40 to 85	(1JX, TA7, TAR)
SN74LVC1T45DRLRG4	Active	Production	SOT-5X3 (DRL) | 6	4000 | LARGE T&R	Yes	NIPDAU	Level-1-260C-UNLIM	-40 to 85	(1JX, TA7, TAR)
SN74LVC1T45YZPR	Active	Production	DSBGA (YZP) | 6	3000 | LARGE T&R	Yes	SNAGCU	Level-1-260C-UNLIM	-40 to 85	(TA2, TA7, TAN)
SN74LVC1T45YZPR.B	Active	Production	DSBGA (YZP) | 6	3000 | LARGE T&R	Yes	SNAGCU	Level-1-260C-UNLIM	-40 to 85	(TA2, TA7, TAN)

(1) **Status:** For more details on status, see our product life cycle.

(2) **Material type:** When designated, preproduction parts are prototypes/experimental devices, and are not yet approved or released for full production. Testing and final process, including without limitation quality assurance, reliability performance testing, and/or process qualification, may not yet be complete, and this item is subject to further changes or possible discontinuation. If available for ordering, purchases will be subject to an additional waiver at checkout, and are intended for early internal evaluation purposes only. These items are sold without warranties of any kind.

(3) **RoHS values:** Yes, No, RoHS Exempt. See the TI RoHS Statement for additional information and value definition.

(4) **Lead finish/Ball material:** Parts may have multiple material finish options. Finish options are separated by a vertical ruled line. Lead finish/Ball material values may wrap to two lines if the finish value exceeds the maximum column width.

(5) **MSL rating/Peak reflow:** The moisture sensitivity level ratings and peak solder (reflow) temperatures. In the event that a part has multiple moisture sensitivity ratings, only the lowest level per JEDEC standards is shown. Refer to the shipping label for the actual reflow temperature that will be used to mount the part to the printed circuit board.

(6) **Part marking:** There may be an additional marking, which relates to the logo, the lot trace code information, or the environmental category of the part.

Multiple part markings will be inside parentheses. Only one part marking contained in parentheses and separated by a "~" will appear on a part. If a line is indented then it is a continuation of the previous line and the two combined represent the entire part marking for that device.

Important Information and Disclaimer: The information provided on this page represents TI's knowledge and belief as of the date that it is provided. TI bases its knowledge and belief on information provided by third parties, and makes no representation or warranty as to the accuracy of such information. Efforts are underway to better integrate information from third parties. TI has taken and continues to take reasonable steps to provide representative and accurate information but may not have conducted destructive testing or chemical analysis on incoming materials and chemicals. TI and TI suppliers consider certain information to be proprietary, and thus CAS numbers and other limited information may not be available for release.

In no event shall TI's liability arising out of such information exceed the total purchase price of the TI part(s) at issue in this document sold by TI to Customer on an annual basis.

OTHER QUALIFIED VERSIONS OF SN74LVC1T45 :

- Automotive : SN74LVC1T45-Q1
- Enhanced Product : SN74LVC1T45-EP

NOTE: Qualified Version Definitions:

- Automotive - Q100 devices qualified for high-reliability automotive applications targeting zero defects
- Enhanced Product - Supports Defense, Aerospace and Medical Applications

TAPE AND REEL INFORMATION

REEL DIMENSIONS

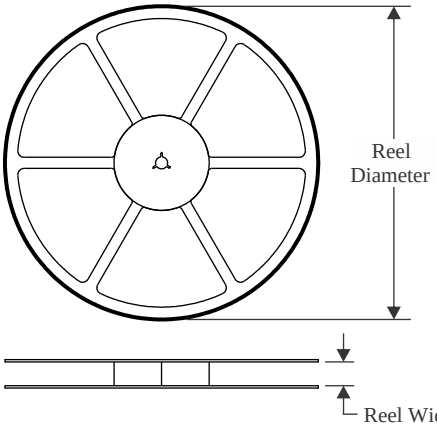

TAPE DIMENSIONS

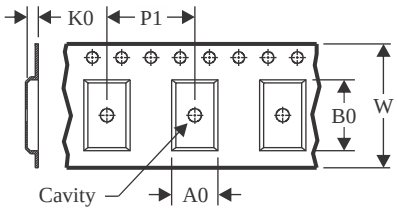

A0	Dimension designed to accommodate the component width
B0	Dimension designed to accommodate the component length
K0	Dimension designed to accommodate the component thickness
W	Overall width of the carrier tape
P1	Pitch between successive cavity centers

QUADRANT ASSIGNMENTS FOR PIN 1 ORIENTATION IN TAPE

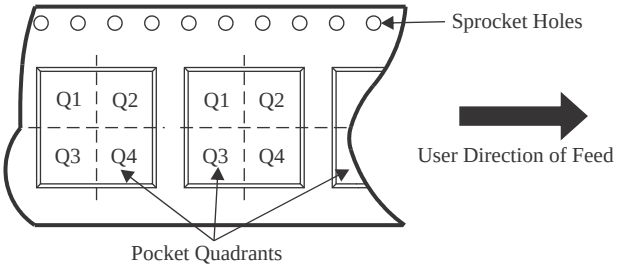

*All dimensions are nominal

Device	Package Type	Package Drawing	Pins	SPQ	Reel Diameter (mm)	Reel Width W1 (mm)	A0 (mm)	B0 (mm)	K0 (mm)	P1 (mm)	W (mm)	Pin1 Quadrant
SN74LVC1T45DBVR	SOT-23	DBV	6	3000	180.0	8.4	3.2	3.2	1.4	4.0	8.0	Q3
SN74LVC1T45DBVR	SOT-23	DBV	6	3000	180.0	8.4	3.2	3.2	1.4	4.0	8.0	Q3
SN74LVC1T45DBVR	SOT-23	DBV	6	3000	180.0	8.4	3.2	3.2	1.4	4.0	8.0	Q3
SN74LVC1T45DBVR	SOT-23	DBV	6	3000	180.0	8.4	3.2	3.2	1.4	4.0	8.0	Q3
SN74LVC1T45DBVRE4	SOT-23	DBV	6	3000	180.0	8.4	3.2	3.2	1.4	4.0	8.0	Q3
SN74LVC1T45DBVRE4	SOT-23	DBV	6	3000	180.0	8.4	3.2	3.2	1.4	4.0	8.0	Q3
SN74LVC1T45DBVRG4	SOT-23	DBV	6	3000	180.0	8.4	3.2	3.2	1.4	4.0	8.0	Q3
SN74LVC1T45DBVRG4	SOT-23	DBV	6	3000	180.0	8.4	3.2	3.2	1.4	4.0	8.0	Q3
SN74LVC1T45DBVT	SOT-23	DBV	6	250	180.0	8.4	3.2	3.2	1.4	4.0	8.0	Q3
SN74LVC1T45DBVT	SOT-23	DBV	6	250	180.0	8.4	3.2	3.2	1.4	4.0	8.0	Q3
SN74LVC1T45DBVTG4	SOT-23	DBV	6	250	180.0	8.4	3.2	3.2	1.4	4.0	8.0	Q3
SN74LVC1T45DBVTG4	SOT-23	DBV	6	250	180.0	8.4	3.2	3.2	1.4	4.0	8.0	Q3
SN74LVC1T45DCKR	SC70	DCK	6	3000	178.0	9.2	2.4	2.4	1.22	4.0	8.0	Q3
SN74LVC1T45DCKR	SC70	DCK	6	3000	180.0	8.4	2.41	2.41	1.2	4.0	8.0	Q3
SN74LVC1T45DCKR	SC70	DCK	6	3000	178.0	9.0	2.4	2.5	1.2	4.0	8.0	Q3
SN74LVC1T45DCKR	SC70	DCK	6	3000	178.0	9.0	2.4	2.5	1.2	4.0	8.0	Q3

Device	Package Type	Package Drawing	Pins	SPQ	Reel Diameter (mm)	Reel Width W1 (mm)	A0 (mm)	B0 (mm)	K0 (mm)	P1 (mm)	W (mm)	Pin1 Quadrant
SN74LVC1T45DCKR	SC70	DCK	6	3000	180.0	8.4	2.3	2.5	1.2	4.0	8.0	Q3
SN74LVC1T45DCKRE4	SC70	DCK	6	3000	178.0	9.0	2.4	2.5	1.2	4.0	8.0	Q3
SN74LVC1T45DCKT	SC70	DCK	6	250	178.0	9.0	2.4	2.5	1.2	4.0	8.0	Q3
SN74LVC1T45DCKT	SC70	DCK	6	250	180.0	8.4	2.3	2.5	1.2	4.0	8.0	Q3
SN74LVC1T45DCKTG4	SC70	DCK	6	250	180.0	8.4	2.41	2.41	1.2	4.0	8.0	Q3
SN74LVC1T45DCKTG4	SC70	DCK	6	250	178.0	9.2	2.4	2.4	1.22	4.0	8.0	Q3
SN74LVC1T45DCKTG4	SC70	DCK	6	250	178.0	9.0	2.4	2.5	1.2	4.0	8.0	Q3
SN74LVC1T45DPKR	USON	DPK	6	5000	180.0	9.5	1.75	1.75	0.7	4.0	8.0	Q2
SN74LVC1T45DPKRG4	USON	DPK	6	5000	180.0	9.5	1.75	1.75	0.7	4.0	8.0	Q2
SN74LVC1T45DRLR	SOT-5X3	DRL	6	4000	180.0	8.4	2.0	1.8	0.75	4.0	8.0	Q3
SN74LVC1T45YZPR	DSBGA	YZP	6	3000	178.0	9.2	1.02	1.52	0.63	4.0	8.0	Q1

TAPE AND REEL BOX DIMENSIONS

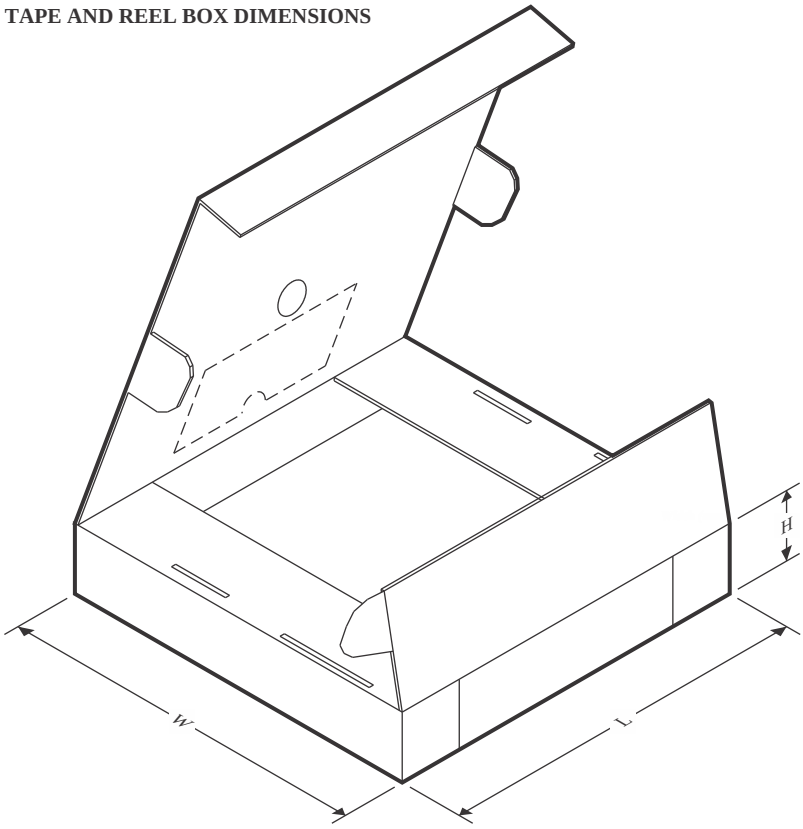

*All dimensions are nominal

Device	Package Type	Package Drawing	Pins	SPQ	Length (mm)	Width (mm)	Height (mm)
SN74LVC1T45DBVR	SOT-23	DBV	6	3000	210.0	185.0	35.0
SN74LVC1T45DBVR	SOT-23	DBV	6	3000	210.0	185.0	35.0
SN74LVC1T45DBVR	SOT-23	DBV	6	3000	210.0	185.0	35.0
SN74LVC1T45DBVR	SOT-23	DBV	6	3000	210.0	185.0	35.0
SN74LVC1T45DBVRE4	SOT-23	DBV	6	3000	210.0	185.0	35.0
SN74LVC1T45DBVRE4	SOT-23	DBV	6	3000	210.0	185.0	35.0
SN74LVC1T45DBVRG4	SOT-23	DBV	6	3000	210.0	185.0	35.0
SN74LVC1T45DBVRG4	SOT-23	DBV	6	3000	210.0	185.0	35.0
SN74LVC1T45DBVT	SOT-23	DBV	6	250	210.0	185.0	35.0
SN74LVC1T45DBVT	SOT-23	DBV	6	250	210.0	185.0	35.0
SN74LVC1T45DBVTG4	SOT-23	DBV	6	250	210.0	185.0	35.0
SN74LVC1T45DBVTG4	SOT-23	DBV	6	250	210.0	185.0	35.0
SN74LVC1T45DCKR	SC70	DCK	6	3000	180.0	180.0	18.0
SN74LVC1T45DCKR	SC70	DCK	6	3000	202.0	201.0	28.0
SN74LVC1T45DCKR	SC70	DCK	6	3000	180.0	180.0	18.0
SN74LVC1T45DCKR	SC70	DCK	6	3000	180.0	180.0	18.0
SN74LVC1T45DCKR	SC70	DCK	6	3000	210.0	185.0	35.0
SN74LVC1T45DCKRE4	SC70	DCK	6	3000	180.0	180.0	18.0

Device	Package Type	Package Drawing	Pins	SPQ	Length (mm)	Width (mm)	Height (mm)
SN74LVC1T45DCKT	SC70	DCK	6	250	180.0	180.0	18.0
SN74LVC1T45DCKT	SC70	DCK	6	250	210.0	185.0	35.0
SN74LVC1T45DCKTG4	SC70	DCK	6	250	202.0	201.0	28.0
SN74LVC1T45DCKTG4	SC70	DCK	6	250	180.0	180.0	18.0
SN74LVC1T45DCKTG4	SC70	DCK	6	250	180.0	180.0	18.0
SN74LVC1T45DPKR	USON	DPK	6	5000	184.0	184.0	19.0
SN74LVC1T45DPKRG4	USON	DPK	6	5000	184.0	184.0	19.0
SN74LVC1T45DRLR	SOT-5X3	DRL	6	4000	210.0	185.0	35.0
SN74LVC1T45YZPR	DSBGA	YZP	6	3000	220.0	220.0	35.0

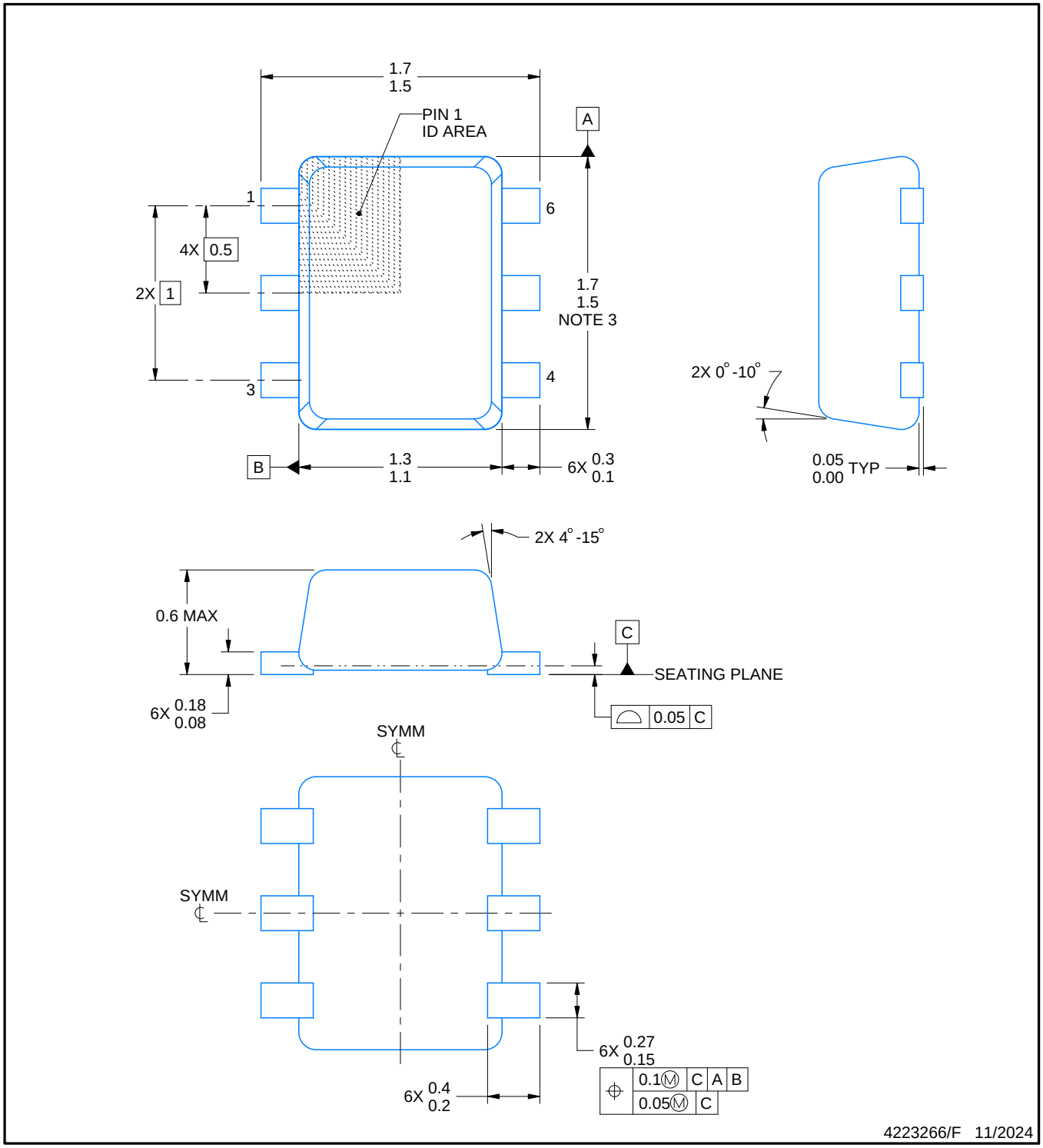

NOTES:

1. All linear dimensions are in millimeters. Any dimensions in parenthesis are for reference only. Dimensioning and tolerancing per ASME Y14.5M.
2. This drawing is subject to change without notice.
3. This dimension does not include mold flash, protrusions, or gate burrs. Mold flash, protrusions, or gate burrs shall not exceed 0.15 mm per side.
4. Reference JEDEC registration MO-293 Variation UAAD

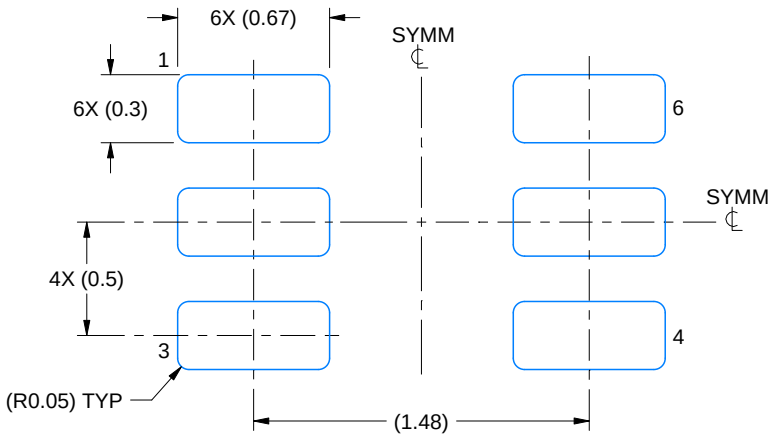

LAND PATTERN EXAMPLE
SCALE:30X

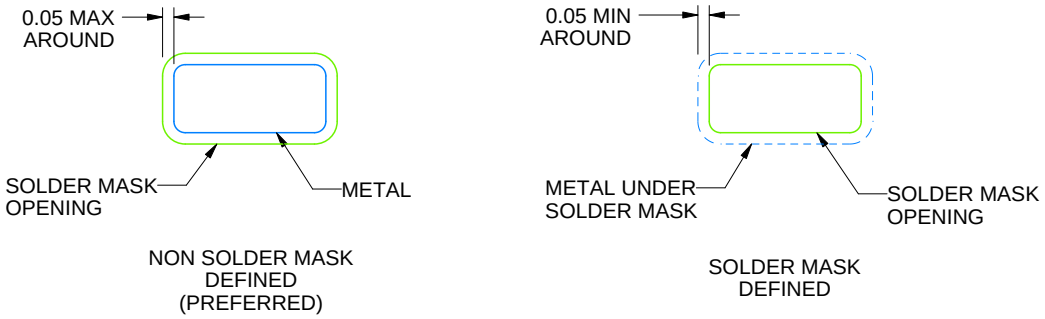

SOLDERMASK DETAILS

4223266/F 11/2024

NOTES: (continued)

5. Publication IPC-7351 may have alternate designs.
6. Solder mask tolerances between and around signal pads can vary based on board fabrication site.
7. Land pattern design aligns to IPC-610, Bottom Termination Component (BTC) solder joint inspection criteria.

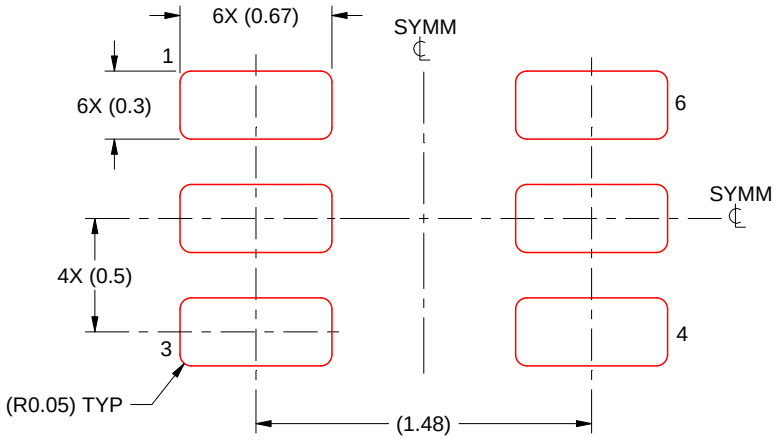

SOLDER PASTE EXAMPLE
BASED ON 0.1 mm THICK STENCIL
SCALE:30X

4223266/F 11/2024

NOTES: (continued)

8. Laser cutting apertures with trapezoidal walls and rounded corners may offer better paste release. IPC-7525 may have alternate design recommendations.
9. Board assembly site may have different recommendations for stencil design.

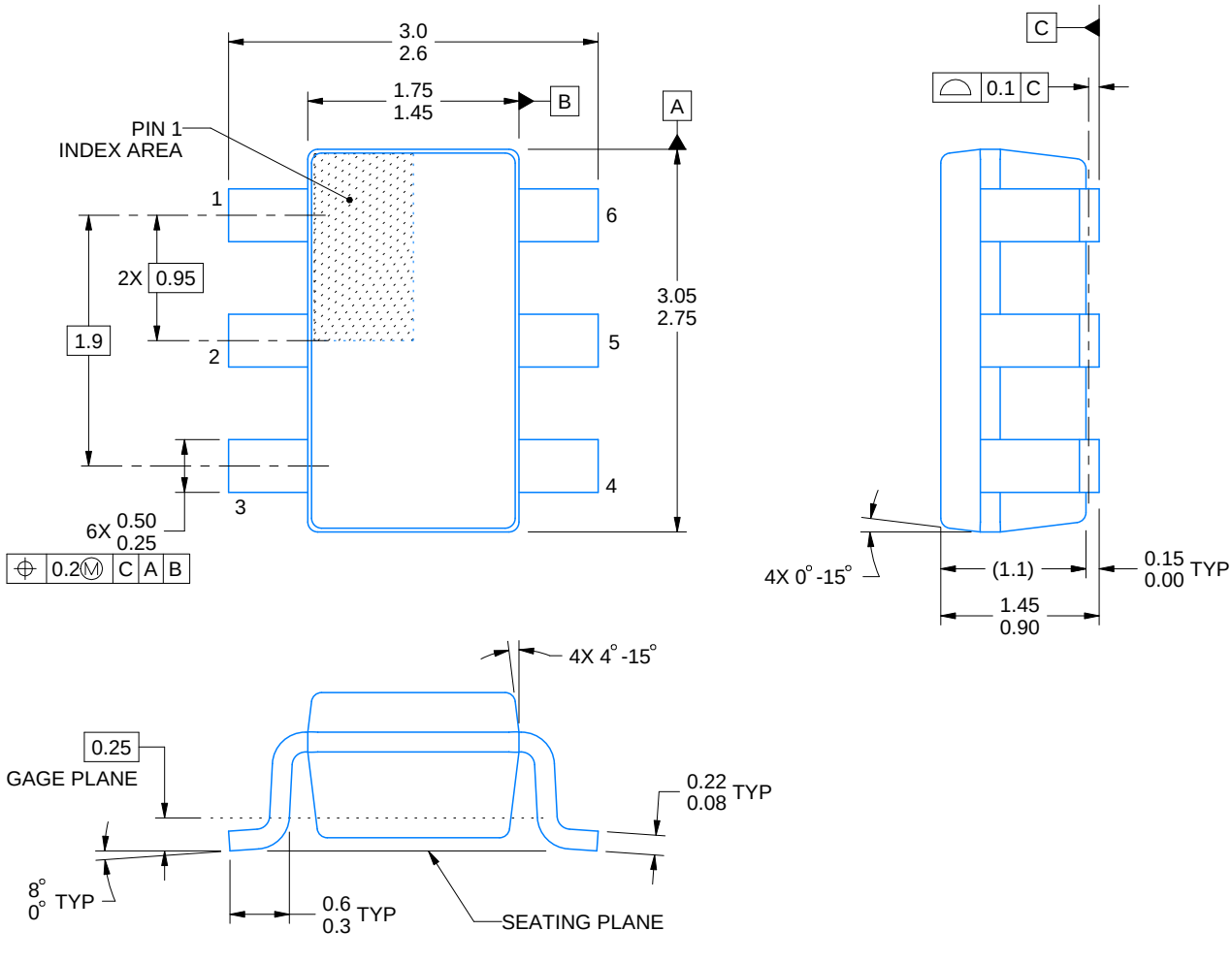

4214840/G 08/2024

NOTES:

1. All linear dimensions are in millimeters. Any dimensions in parenthesis are for reference only. Dimensioning and tolerancing per ASME Y14.5M.
2. This drawing is subject to change without notice.
3. Body dimensions do not include mold flash or protrusion. Mold flash and protrusion shall not exceed 0.25 per side.
4. Leads 1,2,3 may be wider than leads 4,5,6 for package orientation.
5. Refernce JEDEC MO-178.

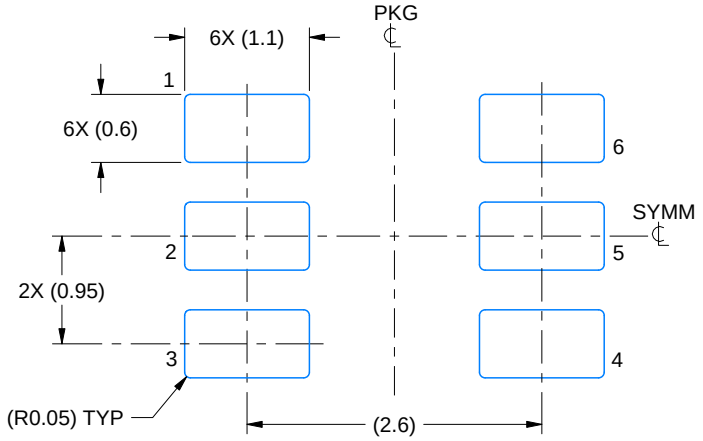

LAND PATTERN EXAMPLE
EXPOSED METAL SHOWN
SCALE:15X

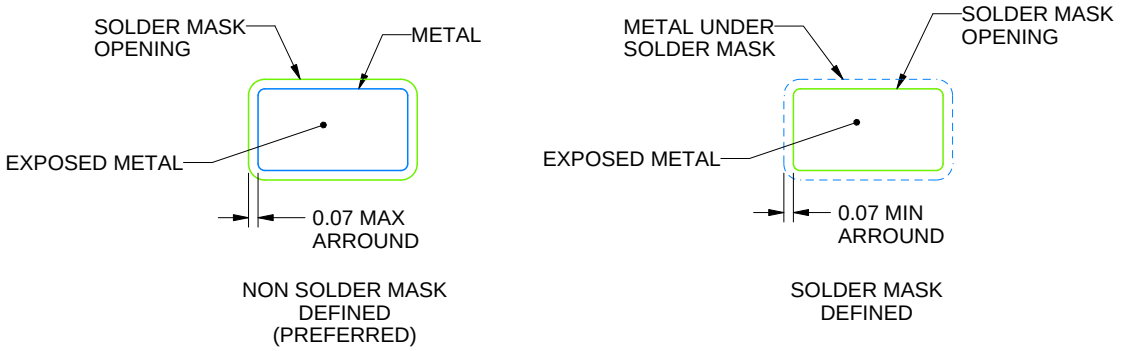

SOLDER MASK DETAILS

4214840/G 08/2024

NOTES: (continued)

6. Publication IPC-7351 may have alternate designs.
7. Solder mask tolerances between and around signal pads can vary based on board fabrication site.

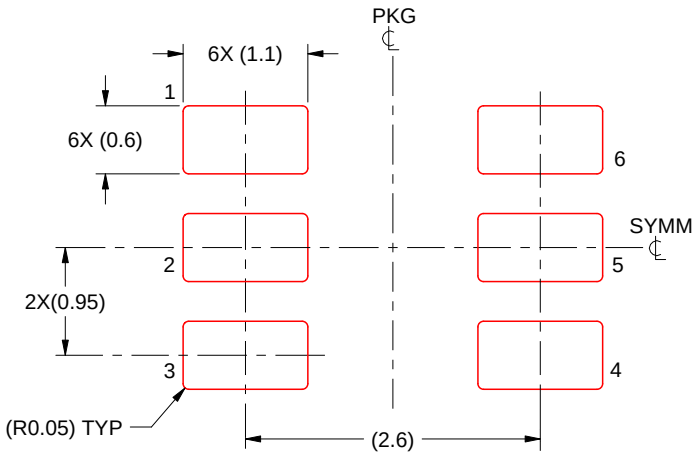

SOLDER PASTE EXAMPLE
BASED ON 0.125 mm THICK STENCIL
SCALE:15X

4214840/G 08/2024

NOTES: (continued)

8. Laser cutting apertures with trapezoidal walls and rounded corners may offer better paste release. IPC-7525 may have alternate design recommendations.
9. Board assembly site may have different recommendations for stencil design.

DPK (S-PUSON-N6) PLASTIC SMALL OUTLINE NO-LEAD

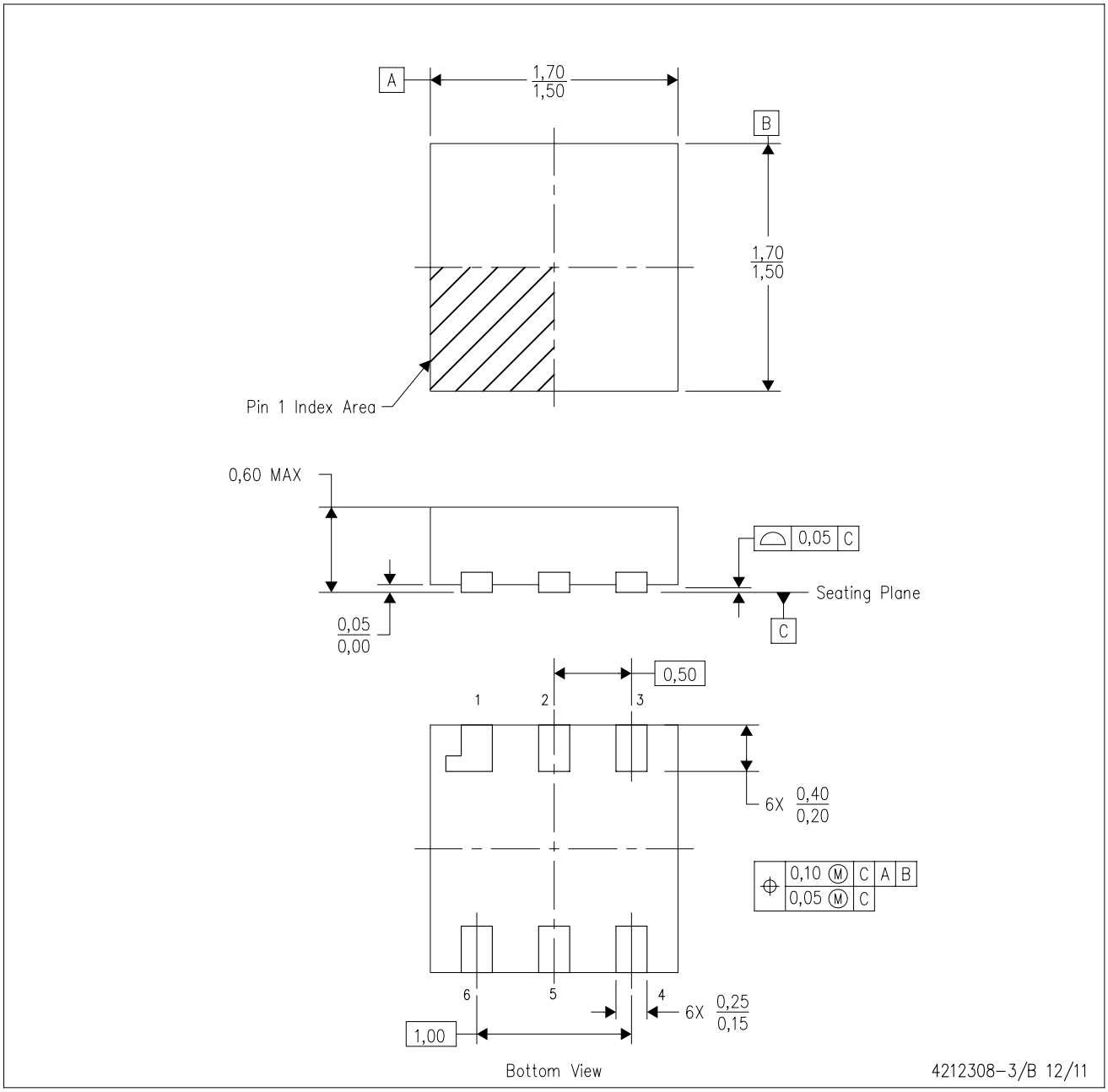

NOTES: A. All linear dimensions are in millimeters. Dimensioning and tolerancing per ASME Y14.5M-1994.
B. This drawing is subject to change without notice.

DPK (S-PUSON-N6) PLASTIC SMALL OUTLINE NO-LEAD

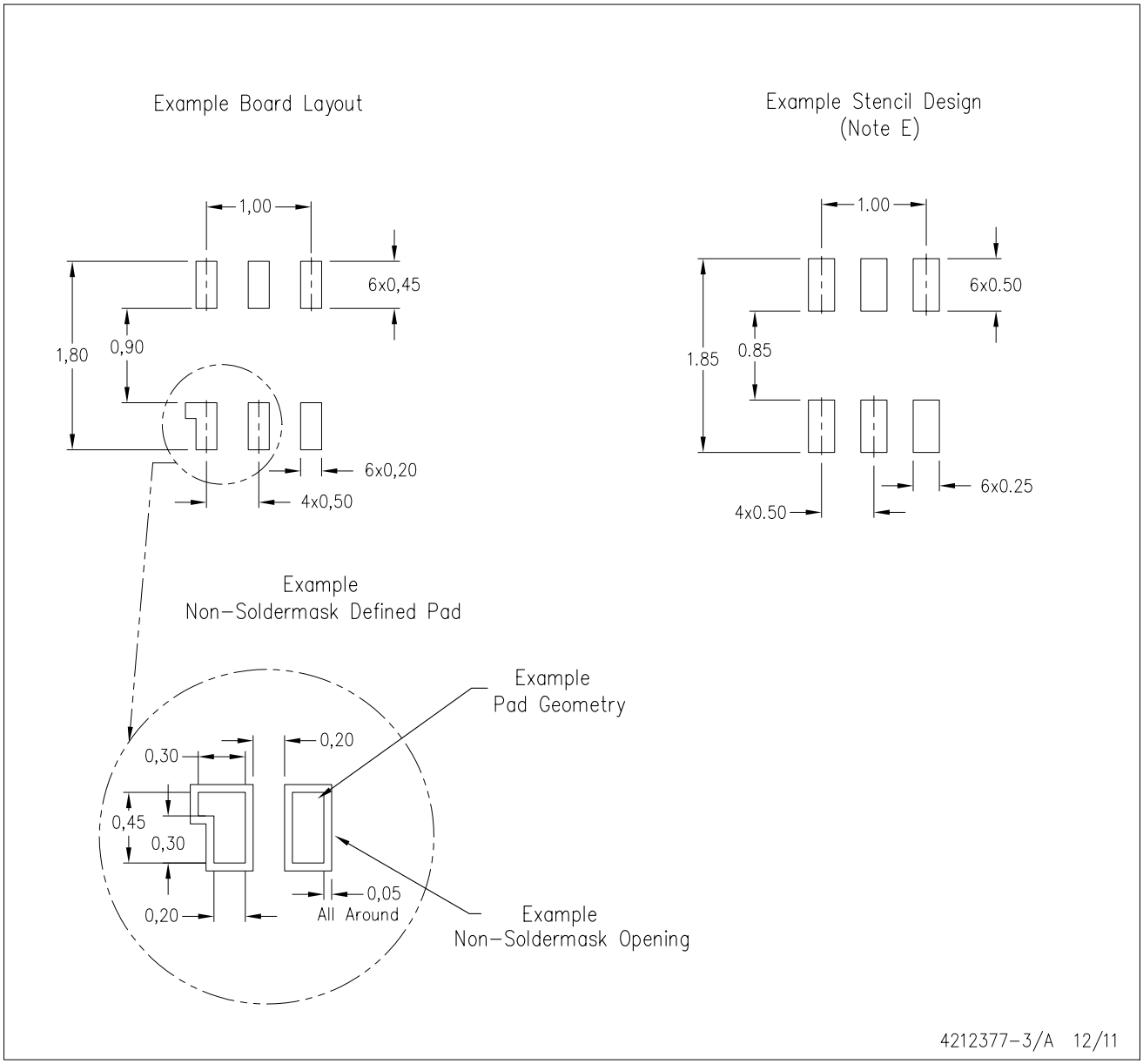

NOTES:
A. All linear dimensions are in millimeters.
B. This drawing is subject to change without notice.
C. Publication IPC-7351 is recommended for alternate designs.
D. Customers should contact their board fabrication site for minimum solder mask web tolerances between signal pads.
E. Maximum stencil thickness 0,127 mm (5 mils). All linear dimensions are in millimeters.
F. Laser cutting apertures with trapezoidal walls and also rounding corners will offer better paste release. Customers should contact their board assembly site for stencil design recommendations. Refer to IPC 7525 for stencil design considerations.
G. Side aperture dimensions over-print land for acceptable area ratio > 0.66. Customer may reduce side aperture dimensions if stencil manufacturing process allows for sufficient release at smaller opening.

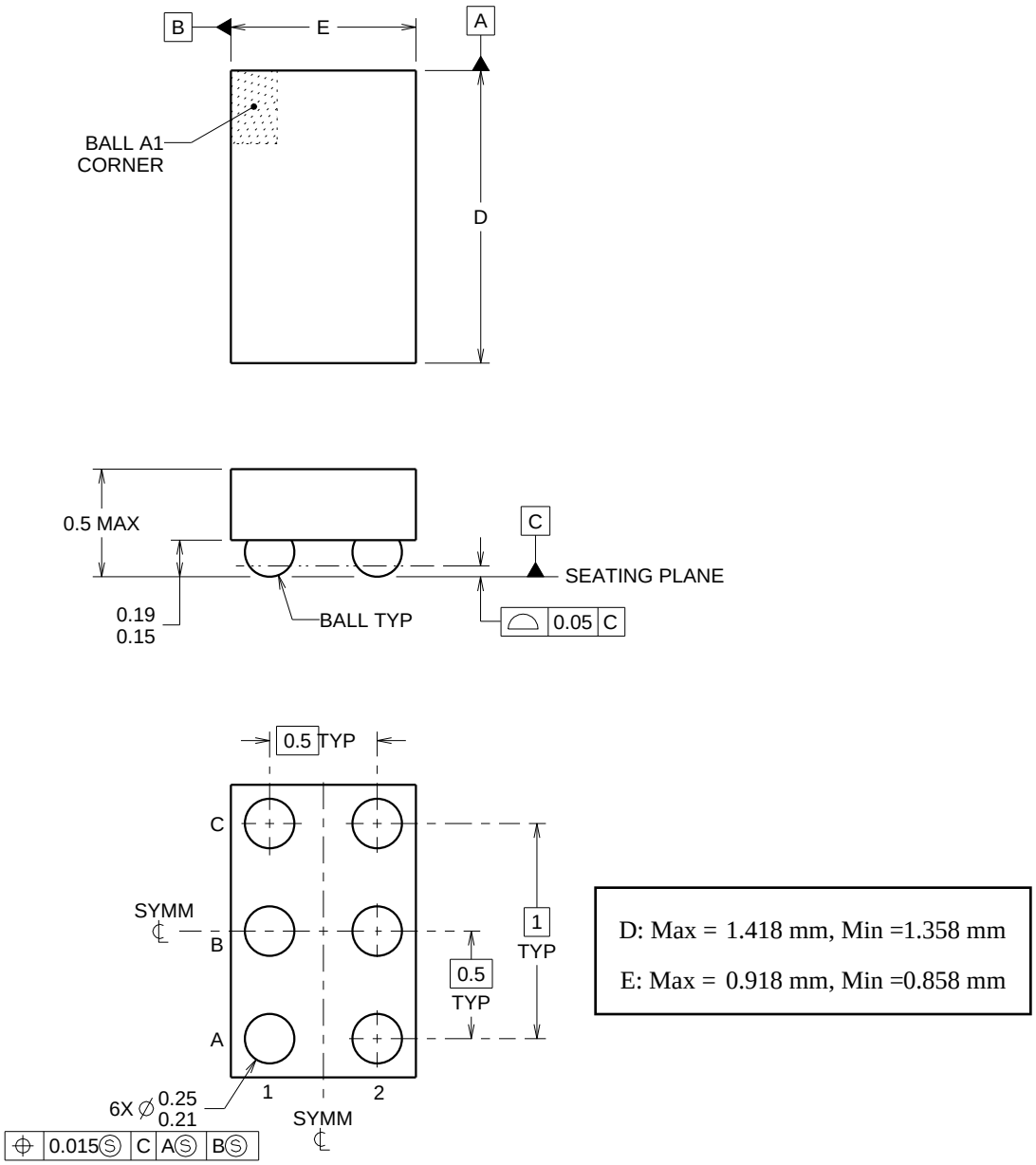

4219524/A 06/2014

NanoFree Is a trademark of Texas Instruments.

NOTES:

1. All linear dimensions are in millimeters. Any dimensions in parenthesis are for reference only. Dimensioning and tolerancing per ASME Y14.5M.
2. This drawing is subject to change without notice.
3. NanoFree™ package configuration.

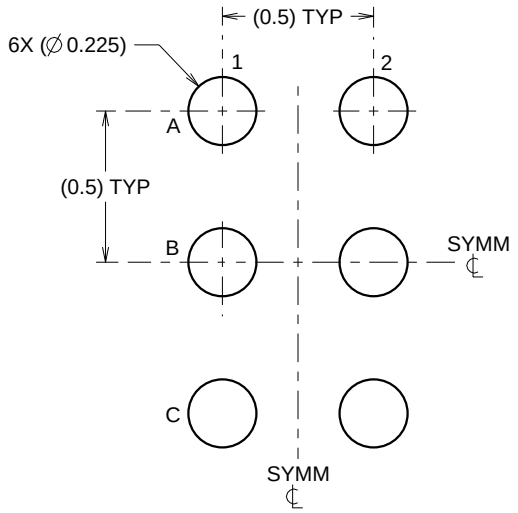

LAND PATTERN EXAMPLE
SCALE:40X

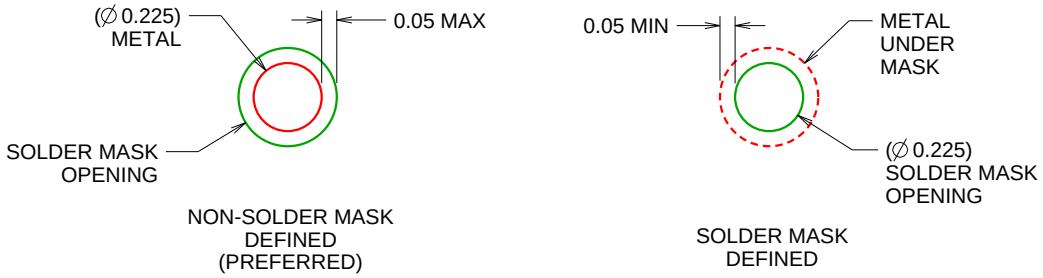

SOLDER MASK DETAILS
NOT TO SCALE

4219524/A 06/2014

NOTES: (continued)

4. Final dimensions may vary due to manufacturing tolerance considerations and also routing constraints.
   For more information, see Texas Instruments literature number SBVA017 (www.ti.com/lit/sbva017).

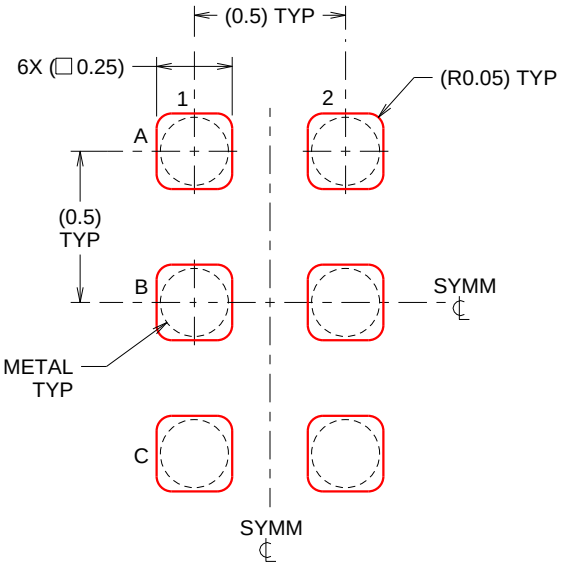

SOLDER PASTE EXAMPLE
BASED ON 0.1 mm THICK STENCIL
SCALE:40X

4219524/A 06/2014

NOTES: (continued)

5. Laser cutting apertures with trapezoidal walls and rounded corners may offer better paste release.

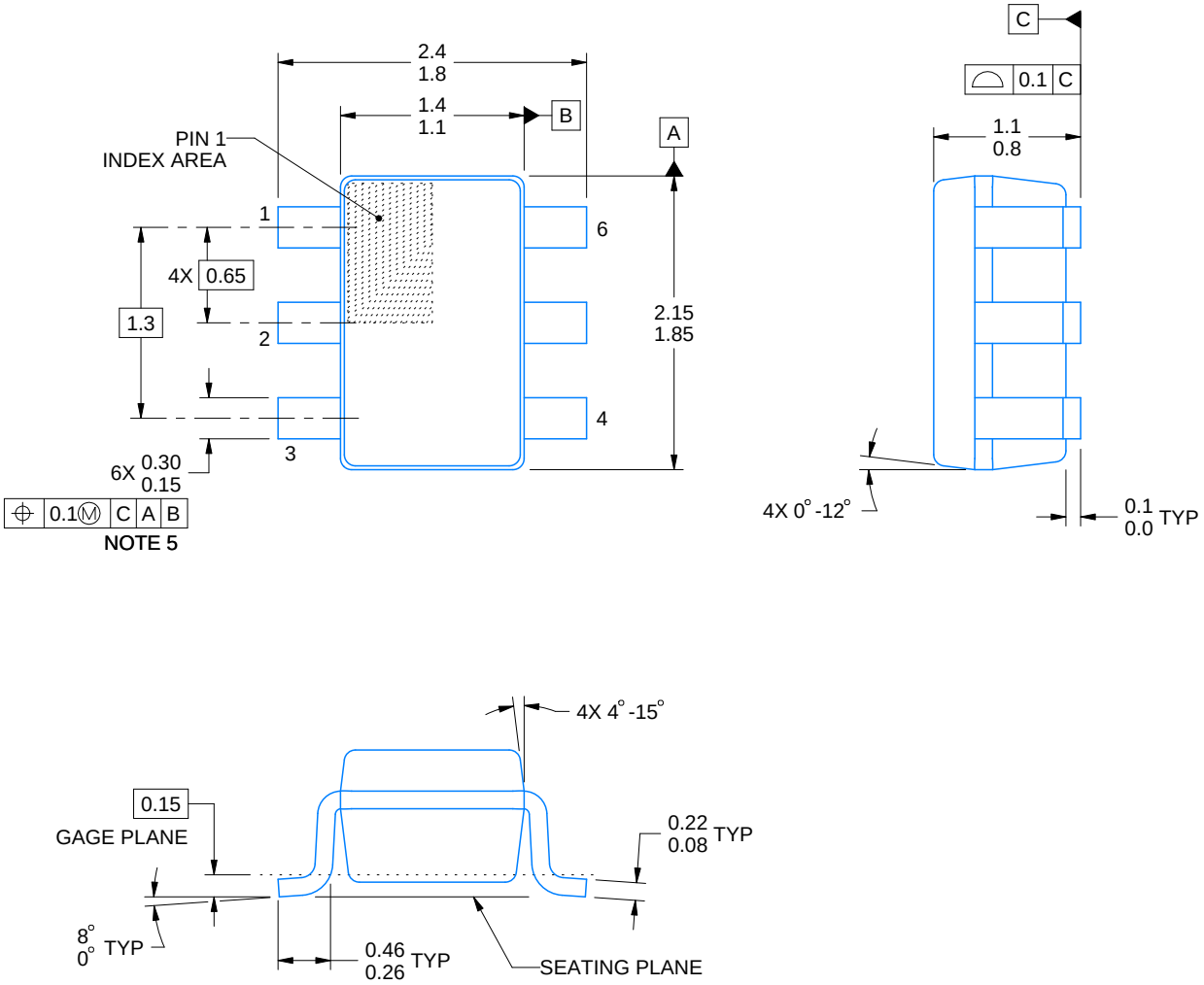

4214835/D 11/2024

NOTES:

1. All linear dimensions are in millimeters. Any dimensions in parenthesis are for reference only. Dimensioning and tolerancing per ASME Y14.5M.
2. This drawing is subject to change without notice.
3. Body dimensions do not include mold flash or protrusion. Mold flash and protrusion shall not exceed 0.15 per side.
4. Falls within JEDEC MO-203 variation AB.

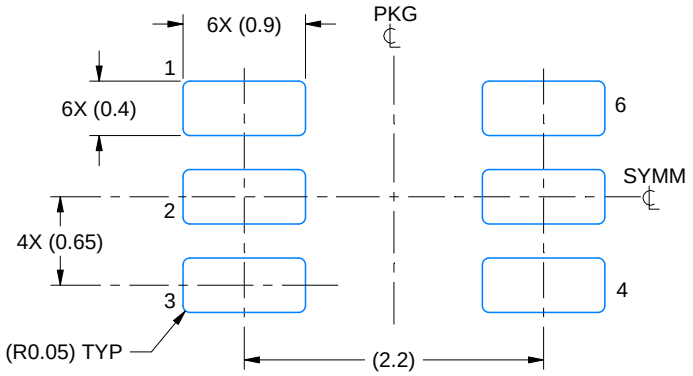

LAND PATTERN EXAMPLE
EXPOSED METAL SHOWN
SCALE:18X

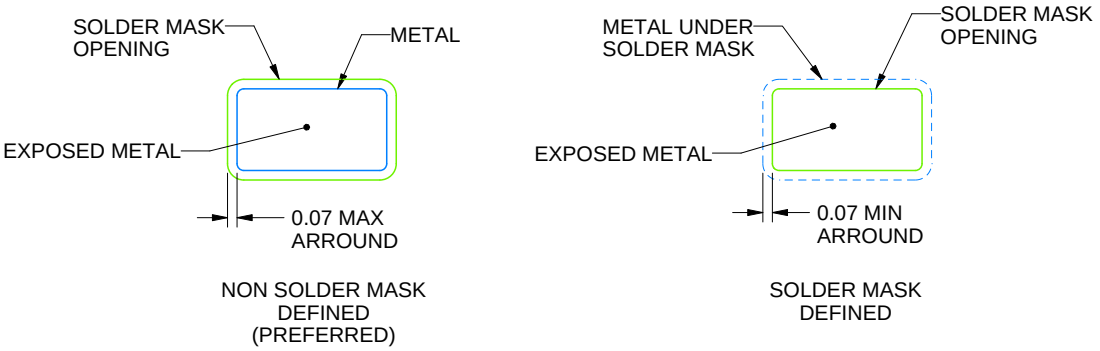

SOLDER MASK DETAILS

4214835/D 11/2024

NOTES: (continued)

5. Publication IPC-7351 may have alternate designs.
6. Solder mask tolerances between and around signal pads can vary based on board fabrication site.

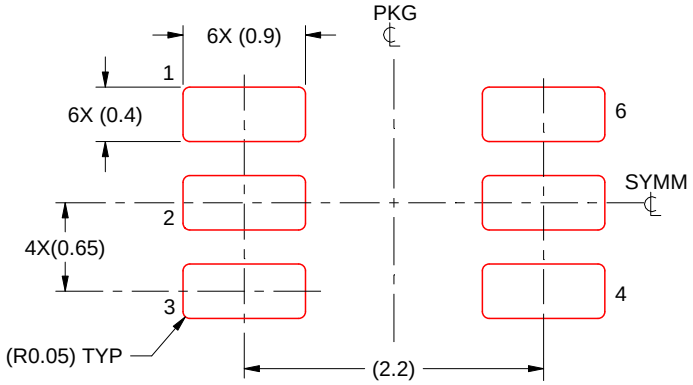

SOLDER PASTE EXAMPLE
BASED ON 0.125 THICK STENCIL
SCALE:18X

4214835/D 11/2024

NOTES: (continued)

7. Laser cutting apertures with trapezoidal walls and rounded corners may offer better paste release. IPC-7525 may have alternate design recommendations.
8. Board assembly site may have different recommendations for stencil design.

IMPORTANT NOTICE AND DISCLAIMER

TI PROVIDES TECHNICAL AND RELIABILITY DATA (INCLUDING DATA SHEETS), DESIGN RESOURCES (INCLUDING REFERENCE DESIGNS), APPLICATION OR OTHER DESIGN ADVICE, WEB TOOLS, SAFETY INFORMATION, AND OTHER RESOURCES “AS IS” AND WITH ALL FAULTS, AND DISCLAIMS ALL WARRANTIES, EXPRESS AND IMPLIED, INCLUDING WITHOUT LIMITATION ANY IMPLIED WARRANTIES OF MERCHANTABILITY, FITNESS FOR A PARTICULAR PURPOSE OR NON-INFRINGEMENT OF THIRD PARTY INTELLECTUAL PROPERTY RIGHTS.

These resources are intended for skilled developers designing with TI products. You are solely responsible for (1) selecting the appropriate TI products for your application, (2) designing, validating and testing your application, and (3) ensuring your application meets applicable standards, and any other safety, security, regulatory or other requirements.

These resources are subject to change without notice. TI grants you permission to use these resources only for development of an application that uses the TI products described in the resource. Other reproduction and display of these resources is prohibited. No license is granted to any other TI intellectual property right or to any third party intellectual property right. TI disclaims responsibility for, and you will fully indemnify TI and its representatives against, any claims, damages, costs, losses, and liabilities arising out of your use of these resources.

TI’s products are provided subject to TI’s Terms of Sale or other applicable terms available either on ti.com or provided in conjunction with such TI products. TI’s provision of these resources does not expand or otherwise alter TI’s applicable warranties or warranty disclaimers for TI products.

TI objects to and rejects any additional or different terms you may have proposed.

Mailing Address: Texas Instruments, Post Office Box 655303, Dallas, Texas 75265
Copyright © 2025, Texas Instruments Incorporated