UCC27212 120V, 3.7A/4.5A Half-Bridge Driver with 5V UVLO

1 Features

- 3.7A source, 4.5A sink output currents
- Maximum boot voltage 120V DC
- 7V to 17V VDD operating range
- 20V ABS maximum VDD operating range
- 5V turn-off Under Voltage Lockout (UVLO)
- Input pins can tolerate –10V to +20V
- 7.2ns rise and 5.5ns fall time (1000pF load)
- 20ns typical propagation delay
- 4ns typical delay matching
- Specified from –40°C to +150°C junction temperature range

2 Applications

- Solar power optimizers and micro inverters
- Telecom and merchant power supplies
- Online and offline UPS
- Energy storage systems
- Battery test equipment

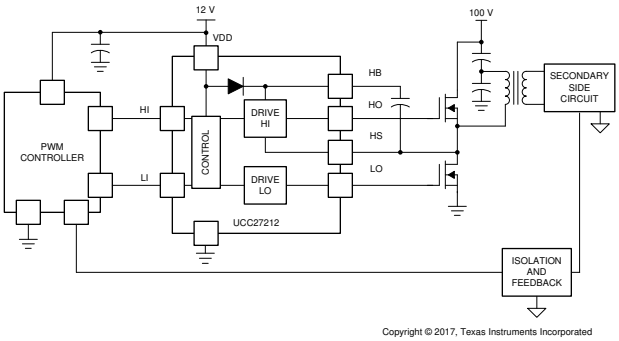

Typical Application Diagram

3 Description

The UCC27212 device has a peak output current of 3.7A source and 4.5A sink, which allows for the ability to drive large power MOSFETs. The device features an on-chip 120V rated bootstrap diode eliminating the need for external discrete diodes. The input structure can directly handle –10V, which increases robustness and is also independent of supply voltage. The UCC27212 offers 5V turn-off UVLO which helps lower power losses and increased input hysteresis that allows for interface to analog or digital PWM controllers with enhanced noise immunity. The switching node of the UCC27212 (HS pin) can handle –(24 – VDD)V maximum, which allows the high-side channel to be protected from inherent negative voltages.

Device Information

PART NUMBER	PACKAGE(1)	BODY SIZE (NOM)
UCC27212	DPR (WSON, 10)	4.00mm x 4.00mm

(1) For all available packages, see the orderable addendum at the end of the data sheet.

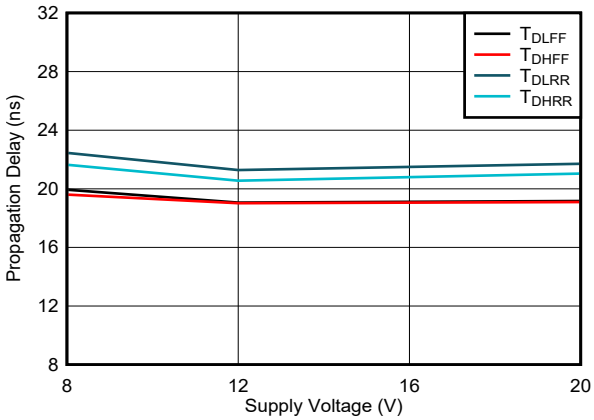

Propagation Delays vs Supply Voltage T = 25°C

An IMPORTANT NOTICE at the end of this data sheet addresses availability, warranty, changes, use in safety-critical applications, intellectual property matters and other important disclaimers. PRODUCTION DATA.

Table of Contents

1 Features....1
2 Applications....1
3 Description....1
4 Pin Configuration and Functions....3
5 Specifications....4
5.1 Absolute Maximum Ratings....4
5.2 ESD Ratings....4
5.3 Recommended Operating Conditions....4
5.4 Thermal Information....4
5.5 Electrical Characteristics....5
5.6 Switching Characteristics....6
5.7 Timing Diagrams....7
5.8 Typical Characteristics....8
6 Detailed Description....11
6.1 Overview....11
6.2 Functional Block Diagram....12
6.3 Feature Description....12
6.4 Device Functional Modes....13
7 Application and Implementation....14
7.1 Application Information....14
7.2 Typical Application....15
8 Power Supply Recommendations....18
9 Layout....19
9.1 Layout Guidelines....19
9.2 Layout Example....20
10 Device and Documentation Support....21
10.1 Device Support....21
10.2 Documentation Support....21
10.3 Receiving Notification of Documentation Updates....21
10.4 Support Resources....21
10.5 Trademarks....21
10.6 Electrostatic Discharge Caution....21
10.7 Glossary....21
11 Revision History....22
12 Mechanical, Packaging, and Orderable Information....23

Copyright © 2024 Texas Instruments Incorporated

4 Pin Configuration and Functions

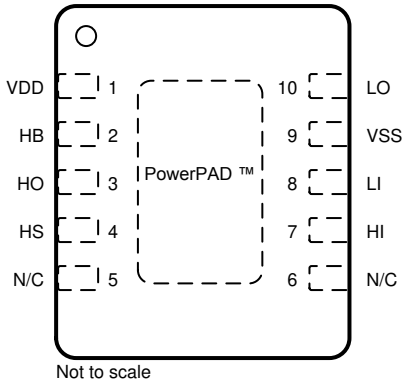

Figure 4-1. DPR Package SON-10 Top View

Table 4-1. Pin Functions

PIN		I/O	DESCRIPTION
NO.	NAME		
2	HB	P	High-side bootstrap supply. The bootstrap diode is on-chip but the external bootstrap capacitor is required. Connect positive side of the bootstrap capacitor to this pin. Typical range of HB bypass capacitor is 0.022μF to 0.1μF.
7	HI	I	High-side input.(2)
3	HO	O	High-side output. Connect to the gate of the high-side power MOSFET.
4	HS	P	High-side source connection. Connect to source of high-side power MOSFET. Connect the negative side of bootstrap capacitor to this pin.
8	LI	I	Low-side input.(2)
10	LO	O	Low-side output. Connect to the gate of the low-side power MOSFET.
5	N/C	—	No internal connection.
6	N/C	—	No internal connection.
Pad	PowerPAD ™ (3)	G	Electrically referenced to VSS (GND). Connect to a large thermal mass trace or GND plane to dramatically improve thermal performance.
1	VDD	P	Positive supply to the lower-gate driver. Decouple this pin to VSS (GND). Typical decoupling capacitor range is 0.22μF to 4.7μF.(1)
9	VSS	G	Negative supply terminal for the device which is generally grounded.

(1) HI or LI input is assumed to connect to a low impedance source signal. The source output impedance is assumed less than 100Ω. If the source impedance is greater than 100Ω, add a bypassing capacitor, each, between HI and VSS and between LI and VSS. The added capacitor value depends on the noise levels presented on the pins, typically from 1nF to 10nF should be effective to eliminate the possible noise effect. When noise is present on two pins, HI or LI, the effect is to cause HO and LO malfunctions to have wrong logic outputs.
(2) For cold temperature applications TI recommends the upper capacitance range. Follow the Layout Guidelines for PCB layout.
(3) The thermal pad is not directly connected to any leads of the package; however, it is electrically and thermally connected to the substrate which is the ground of the device.

Copyright © 2024 Texas Instruments Incorporated

5 Specifications

5.1 Absolute Maximum Ratings

Over operating free-air temperature range and all voltages are with respect to V_{SS} (unless otherwise noted).[1]

			MIN	MAX	UNIT
V_{DD}	Supply voltage		–0.3	20	V
V_{HI}, V_{LI}	Input voltages on HI and LI		–10	20	V
V_{LO}	Output voltage on LO	DC	–0.3	V_{DD} + 0.3	V
		Repetitive pulse < 100 ns[2]	–2	V_{DD} + 0.3	
V_{HO}	Output voltage on HO	DC	V_{HS} – 0.3	V_{HB} + 0.3	V
		Repetitive pulse < 100 ns[2]	V_{HS} – 2	V_{HB} + 0.3	
V_{HS}	Voltage on HS	DC	–1	100	V
		Repetitive pulse < 100 ns[2]	–(24 V – VDD)	115	
V_{HB}	Voltage on HB		–0.3	120	V
	Voltage on HB-HS		–0.3	20	V
T_J	Operating junction temperature		–40	150	°C
T_{stg}	Storage temperature		–65	150	°C

(1) Operation outside the *Absolute Maximum Ratings* may cause permanent device damage. *Absolute Maximum Ratings* do not imply functional operation of the device at these or any other conditions beyond those listed under *Recommended Operating Conditions*. If used outside the *Recommended Operating Conditions* but within the *Absolute Maximum Ratings*, the device may not be fully functional, and this may affect device reliability, functionality, performance, and shorten the device lifetime.
(2) Values are verified by characterization and are not production tested.

5.2 ESD Ratings

			VALUE	UNIT
$V_{(ESD)}$	Electrostatic discharge	Human-body model (HBM), per ANSI/ESDA/JEDEC JS-001[1]	±2000	V
		Charged-device model (CDM), per JEDEC specification JESD22-C101[2]	±1500	V

(1) JEDEC document JEP155 states that 500-V HBM allows safe manufacturing with a standard ESD control process.
(2) JEDEC document JEP157 states that 250-V CDM allows safe manufacturing with a standard ESD control process.

5.3 Recommended Operating Conditions

Over operating free-air temperature range and all voltages are with respect to V_{SS} (unless otherwise noted).

		MIN	NOM	MAX	UNIT
V_{DD}	Supply voltage	7	12	17	V
V_{HS}	Voltage on HS	–1		100	V
	Voltage on HS (repetitive pulse < 100 ns)[1]	–(20 V – VDD)		110	
V_{HB}	Voltage on HB	V_{HS} + 8.0		115	
SR_{HS}	Voltage slew rate on HS			50	V/ns
T_J	Operating junction temperature	–40		150	°C

(1) Values are verified by characterization and are not production tested.

5.4 Thermal Information

THERMAL METRIC[1]		UCC27212 DPR (WSON) 10 Pins	UNIT
$R_{\theta JA}$	Junction-to-ambient thermal resistance	46.1	°C/W
$R_{\theta JC(top)}$	Junction-to-case (top) thermal resistance	36.7	°C/W
$R_{\theta JB}$	Junction-to-board thermal resistance	22.1	°C/W
ψ_{JT}	Junction-to-top characterization parameter	0.9	°C/W

Copyright © 2024 Texas Instruments Incorporated

5.4 Thermal Information (continued)

THERMAL METRIC[1]		UCC27212 DPR (WSON) 10 Pins	UNIT
ψ_{JB}	Junction-to-board characterization parameter	22	°C/W
$R_{\theta JC(bot)}$	Junction-to-case (bottom) thermal resistance	9	°C/W

(1) For more information about traditional and new thermal metrics, see the Semiconductor and IC Package Thermal Metrics application report, SPRA953.

5.5 Electrical Characteristics

V_{DD} = V_{HB} =12 V, V_{HS} = V_{SS} = 0 V, No load on LO or HO, T_A = T_J = –40°C to +150°C (unless otherwise noted).

PARAMETER		TEST CONDITIONS	MIN	TYP	MAX	UNIT
SUPPLY CURRENTS						
I_{DD}	VDD quiescent current	V_{LI} = V_{HI} = 0 V		0.11	0.19	mA
I_{DDO}	VDD operating current	f = 500 kHz, C_{LOAD} = 0		1.4	3	mA
I_{HB}	Boot voltage quiescent current	V_{LI} = V_{HI} = 0 V		0.065	0.12	mA
I_{HBO}	Boot voltage operating current	f = 500 kHz, C_{LOAD} = 0		1.3	3	mA
I_{HBS}	HB to VSS quiescent current	V_{HS} = V_{HB} = 100 V		0.0005	1	µA
I_{HBSO}	HB to VSS operating current	f = 500 kHz, C_{LOAD} = 0		0.03	1	mA
INPUT						
V_{HIT_HI}	Input voltage high threshold		1.7	2.3	2.55	V
V_{HIT_LI}	Input voltage hig threshold		1.7	2.3	2.55	V
V_{LIT_HI}	Input voltage low threshold		1.2	1.6	1.9	V
V_{LIT_LI}	Input voltage low threshold		1.2	1.6	1.9	V
V_{IHYS_HI}	Input voltage Hysteresis			0.7		V
V_{IHYS_LI}	Input voltage Hysteresis			0.7		V
R_{IN_HI}	Input pulldown resistance	V_{IN} = 3V		68		kΩ
R_{IN_LI}	Input pulldown resistance	V_{IN} = 3V		68		kΩ
UNDERVOLTAGE PROTECTION (UVLO)						
V_{DDR}	VDD turnon threshold		4.9	5.7	6.4	V
V_{DDHYS}	VDD threshold hysteresis			0.4		V
V_{HBR}	VHB turnon threshold		4.35	5.3	6.3	V
V_{HBHYS}	VHB threshold hysteresis			0.3		V
BOOTSTRAP DIODE						
V_F	Low-current forward voltage	$I_{VDD - HB}$ = 100 µA		0.65	0.85	V
V_{FI}	High-current forward voltage	$I_{VDD - HB}$ = 100 mA		0.9	1.05	V
R_D	Dynamic resistance, ΔVF/ΔI	$I_{VDD - HB}$ = 160 mA and 180 mA	0.3	0.55	0.85	Ω
LO GATE DRIVER						
V_{LOL}	Low level output voltage	I_{LO} = 100 mA		0.07	0.19	V
V_{LOH}	High level output voltage	I_{LO} = -100 mA, V_{LOH} = V_{DD} – V_{LO}		0.11	0.29	V
	Peak pullup current[1]	V_{LO} = 0 V		3.7		A
	Peak pulldown current[1]	V_{LO} = 12 V		4.5		A
HO GATE DRIVER						
V_{HOL}	Low level output voltage	I_{HO} = 100 mA		0.07	0.19	V
V_{HOH}	High level output voltage	I_{HO} = –100 mA, V_{HOH} = V_{HB}- V_{HO}		0.11	0.29	V
	Peak pullup current[1]	V_{HO} = 0 V		3.7		A
	Peak pulldown current[1]	V_{HO} = 12 V		4.5		A

(1) Parameter not tested in production.

Copyright © 2024 Texas Instruments Incorporated

5.6 Switching Characteristics

V_{DD} = V_{HB} = 12 V, V_{HS} = V_{SS} = 0 V, No load on LO or HO, T_A = T_J = –40°C to +150°C (unless otherwise noted).

PARAMETER		TEST CONDITIONS	MIN	TYP	MAX	UNIT
PROPAGATION DELAYS						
t_{DLFF}	VLI falling to VLO falling	C_{LOAD} = 0 pF, from V_{LIT} of LI to 90% of LO falling	10	19	30	ns
t_{DHFF}	VHI falling to VHO falling	C_{LOAD} = 0 pF, from V_{LIT} of HI to 90% of HO falling	10	19	30	ns
t_{DLRR}	VLI rising to VLO rising	C_{LOAD} = 0 pF, from V_{HIT} of LI to 10% of LO rising	10	20	42	ns
t_{DHRR}	VHI rising to VHO rising	C_{LOAD} = 0 pF, C_{LOAD} = 0 pF, from V_{HIT} of HI to 10% of HO rising	10	20	42	ns
DELAY MATCHING						
t_{MON}	Delay from HO off to LO on	T_J = 25°C		4	9.5	ns
t_{MON}	Delay from HO off to LO on	T_J = -40°C to 150°C		4	17	ns
t_{MOFF}	Delay from LO off to HO on	T_J = 25°C		4	9.5	ns
t_{MOFF}	Delay from LO off to HO on	T_J = -40°C to 150°C		4	17	ns
OUTPUT RISE AND FALL TIME						
t_{R_LO}	LO rise time	C_{LOAD} = 1000 pF, from 10% to 90%		7.2		ns
t_{R_HO}	HO rise time	C_{LOAD} = 1000 pF, from 10% to 90%		7.2		ns
t_{F_LO}	LO fall time	C_{LOAD} = 1000 pF, from 10% to 90%		5.5		ns
t_{F_HO}	HO fall time	C_{LOAD} = 1000 pF, from 10% to 90%		5.5		ns
$t_{R_LO_p1}$	LO rise time (3 V to 9 V)	C_{LOAD} = 0.1 µF, (3V to 9V)		0.27	0.6	µs
$t_{R_HO_p1}$	HO rise time (3 V to 9 V)	C_{LOAD} = 0.1 µF, (3V to 9V)		0.27	0.6	µs
$t_{F_LO_p1}$	LO fall time (9 V to 3 V)	C_{LOAD} = 0.1 µF, (9V to 3V)		0.16	0.4	µs
$t_{F_HO_p1}$	HO fall time (9 V to 3 V)	C_{LOAD} = 0.1 µF, (9V to 3V)		0.16	0.4	µs
MISCELLANEOUS						
t_{IN_PW}	Minimum input pulse width that changes the output LO				40	ns
t_{IN_PW}	Minimum input pulse width that changes the output HO				40	ns
t_{OFF_BSD}	Bootstrap diode turnoff time(1) (2)	I_F = 20 mA, I_{REV} = 0.5 A(3)		20		ns

(1) Parameter not tested in production.
(2) Typical values for T_A = 25°C.
(3) I_F: Forward current applied to bootstrap diode, I_{REV}: Reverse current applied to bootstrap diode.

Copyright © 2024 Texas Instruments Incorporated

5.7 Timing Diagrams

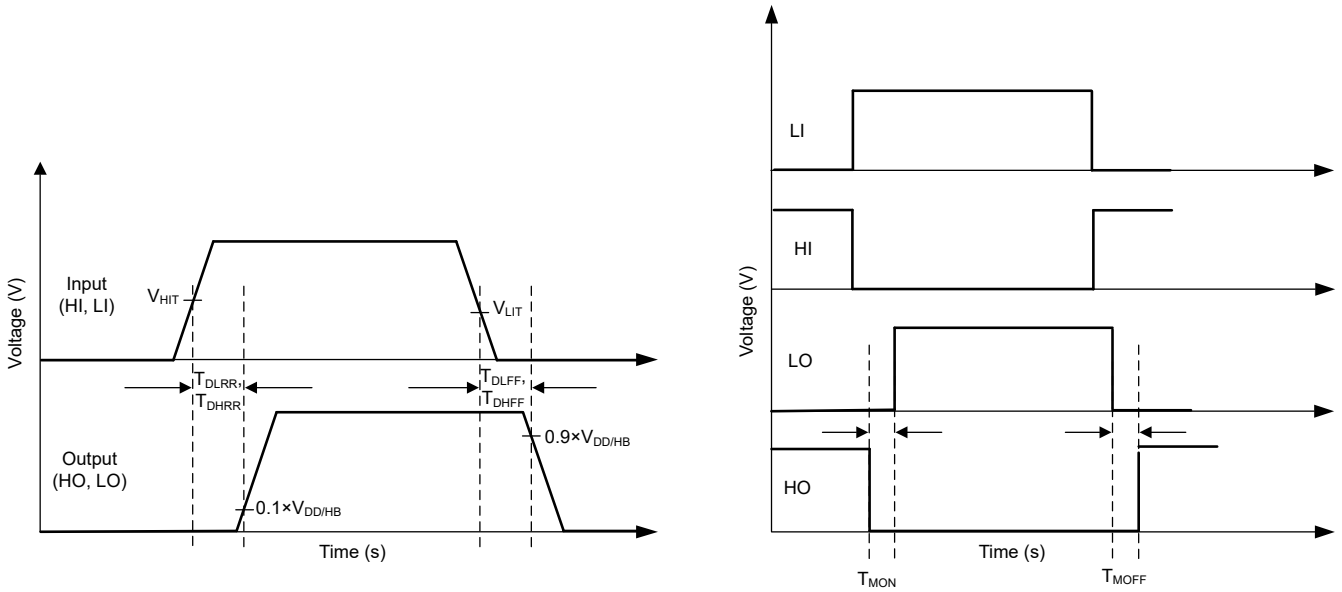

Figure 5-1. Timing Diagrams

5.8 Typical Characteristics

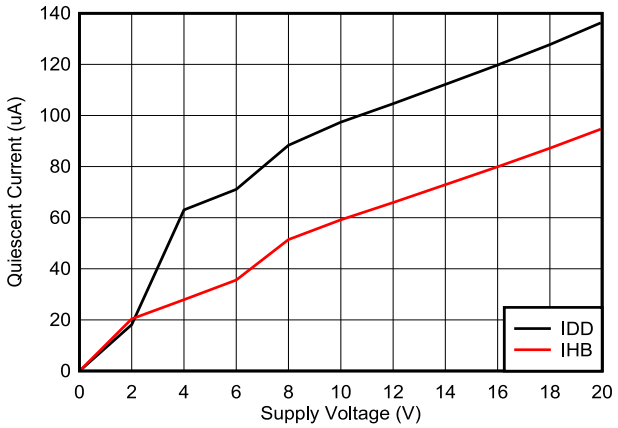

T = 25°C

Figure 5-2. Quiescent Current vs Supply Voltage

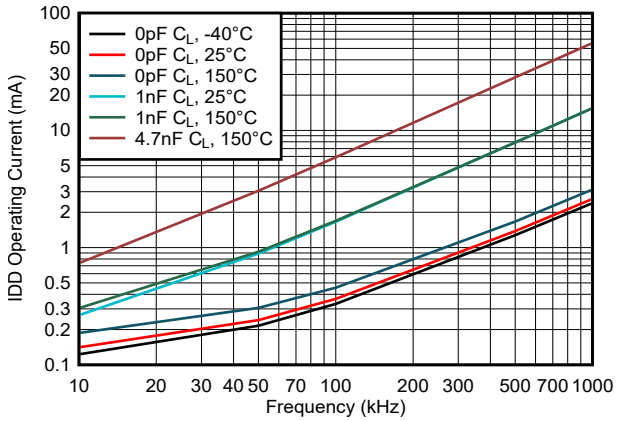

V_{DD} = 12 V

Figure 5-3. IDD Operating Current vs Frequency

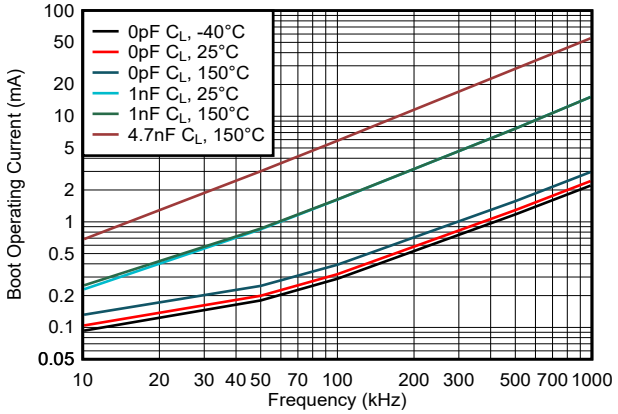

$V_{HB} – V_{HS}$ = 12 V

Figure 5-4. Boot Voltage Operating Current vs Frequency (HB To HS)

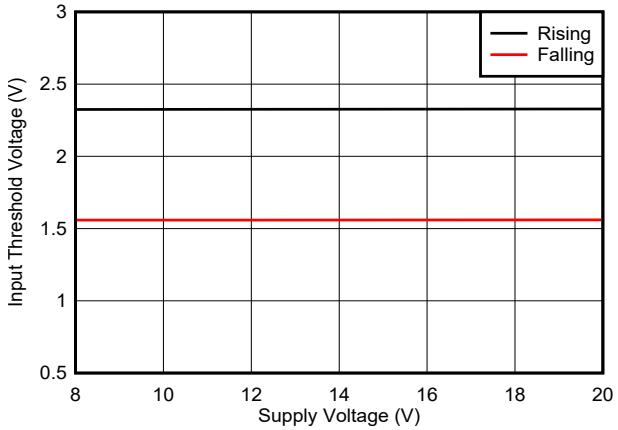

T = 25°C

Figure 5-5. Input Threshold vs Supply Voltage

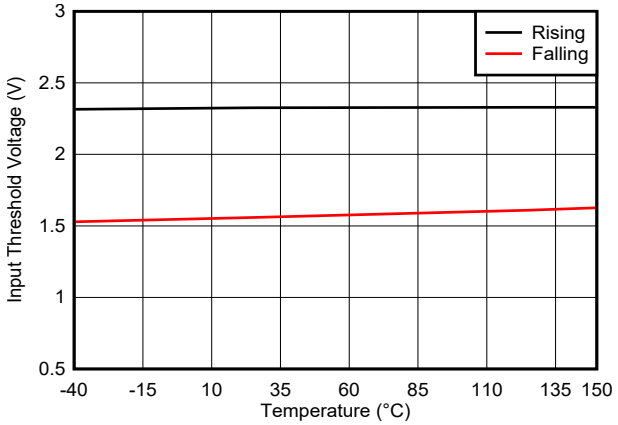

V_{DD} = 12 V

Figure 5-6. Input Thresholds vs Temperature

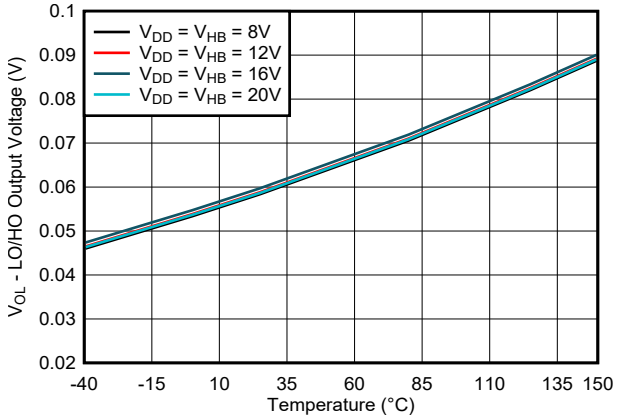

$I_{HO} = I_{LO}$ = 100 mA

Figure 5-7. LO and HO Low-Level Output Voltage vs Temperature

Copyright © 2024 Texas Instruments Incorporated

5.8 Typical Characteristics (continued)

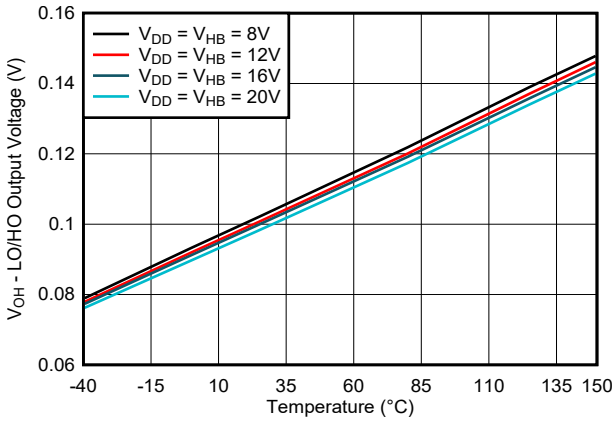

I_{HO} = I_{LO} = 100 mA

Figure 5-8. LO and HO High-Level Output Voltage vs Temperature

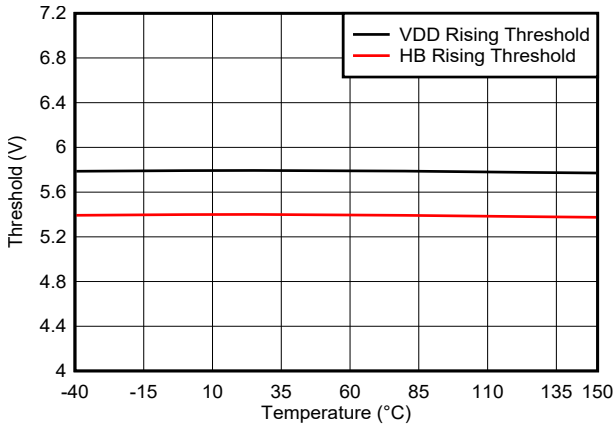

Figure 5-9. Undervoltage Lockout Threshold vs Temperature

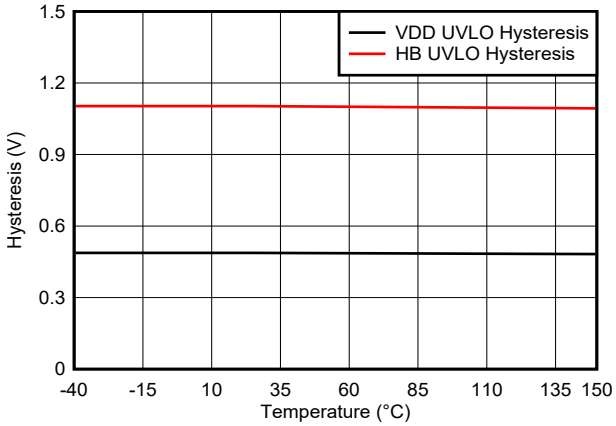

Figure 5-10. Undervoltage Lockout Threshold Hysteresis vs Temperature

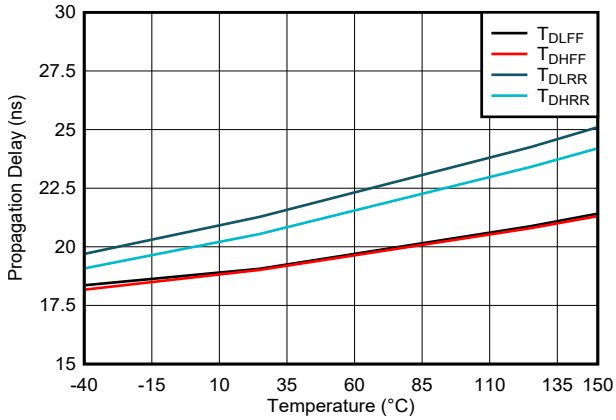

V_{DD} = V_{HB} = 12 V

Figure 5-11. Propagation Delays vs Temperature

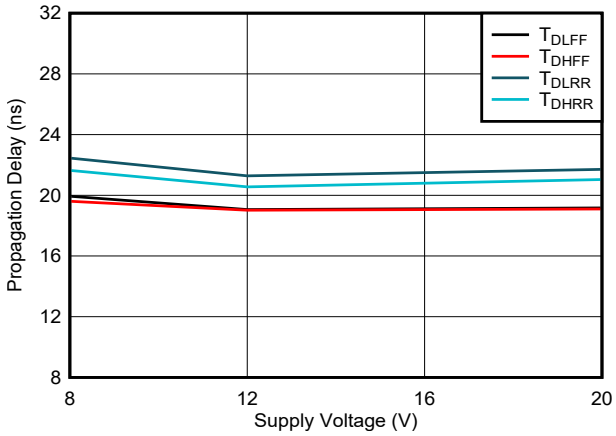

T = 25°C

Figure 5-12. Propagation Delays vs Supply Voltage (V_{DD} = V_{HB})

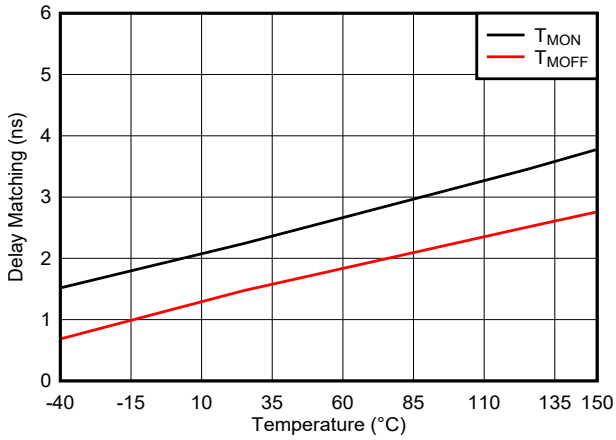

V_{DD} = V_{HB} = 12 V

Figure 5-13. Delay Matching vs Temperature

Copyright © 2024 Texas Instruments Incorporated

5.8 Typical Characteristics (continued)

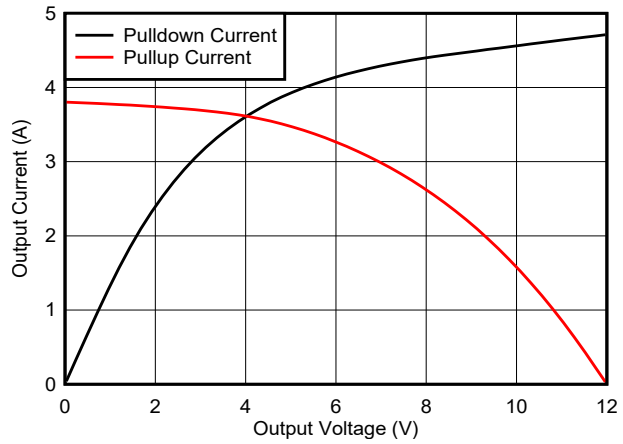

$V_{DD} = V_{HB} = 12$ V

Figure 5-14. Output Current vs Output Voltage

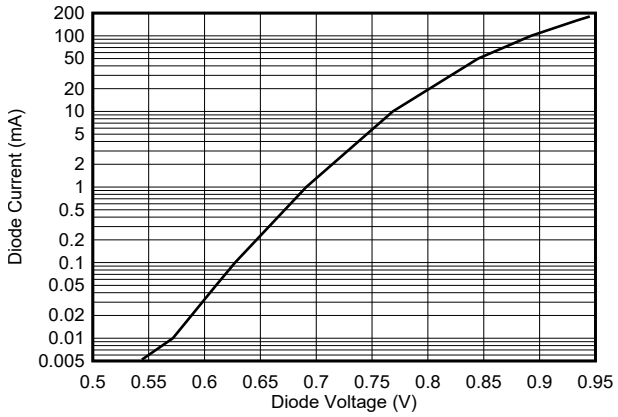

Figure 5-15. Diode Current vs Diode Voltage

Copyright © 2024 Texas Instruments Incorporated

6 Detailed Description

6.1 Overview

The UCC27212 device is designed to drive both the high-side and low-side of N-Channel MOSFETs in a half- and full-bridge or synchronous-buck configuration. The floating high-side driver can operate with supply voltages of up to 120V, which allows for N-Channel MOSFET control in half-bridge, full-bridge, push-pull, two-switch forward, and active clamp forward converters.

The UCC27212 device feature 3.7A source and 4.5A sink capability, industry best-in-class switching characteristics and a host of other features listed in Table 6-1. These features combine to ensure efficient, robust and reliable operation in high-frequency switching power circuits.

Table 6-1. UCC27212 Highlights

FEATURE	BENEFIT
3.7A source and 4.5A sink current	High peak current ideal for driving large power MOSFETs with minimal power loss (fast-drive capability at Miller plateau)
Input pins (HI and LI) can directly handle –10VDC up to 20VDC	Increased robustness and ability to handle undershoot and overshoot can interface directly to gate-drive transformers without having to use rectification diodes.
120V internal boot diode	Provides voltage margin to meet telecom 100V surge requirements
Switch node (HS pin) able to handle –(24 – VDD) V maximum for 100ns	Allows the high-side channel to have extra protection from inherent negative voltages caused by parasitic inductance and stray capacitance
Robust ESD circuitry to handle voltage spikes	Excellent immunity to large dV/dT conditions
20ns propagation delay with 7.2ns rise time and 5.5ns fall time	Best-in-class switching characteristics and extremely low-pulse transmission distortion
4ns (typical) delay matching between channels	Avoids transformer volt-second offset in bridge
Symmetrical UVLO circuit	Ensures high-side and low-side shut down at the same time
TTL optimized thresholds with increased hysteresis	Complementary to analog or digital PWM controllers; increased hysteresis offers added noise immunity

In the UCC27212 device, the high side and low side each have independent inputs that allow maximum flexibility of input control signals in the application. The boot diode for the high-side driver bias supply is internal to the UCC27212. The UCC27212 is the TTL or logic compatible version. The high-side driver is referenced to the switch node (HS), which is typically the source pin of the high-side MOSFET and drain pin of the low-side MOSFET. The low-side driver is referenced to V_{SS}, which is typically ground. The UCC27212 functions are divided into the input stages, UVLO protection, level shift, boot diode, and output driver stages.

Copyright © 2024 Texas Instruments Incorporated

6.2 Functional Block Diagram

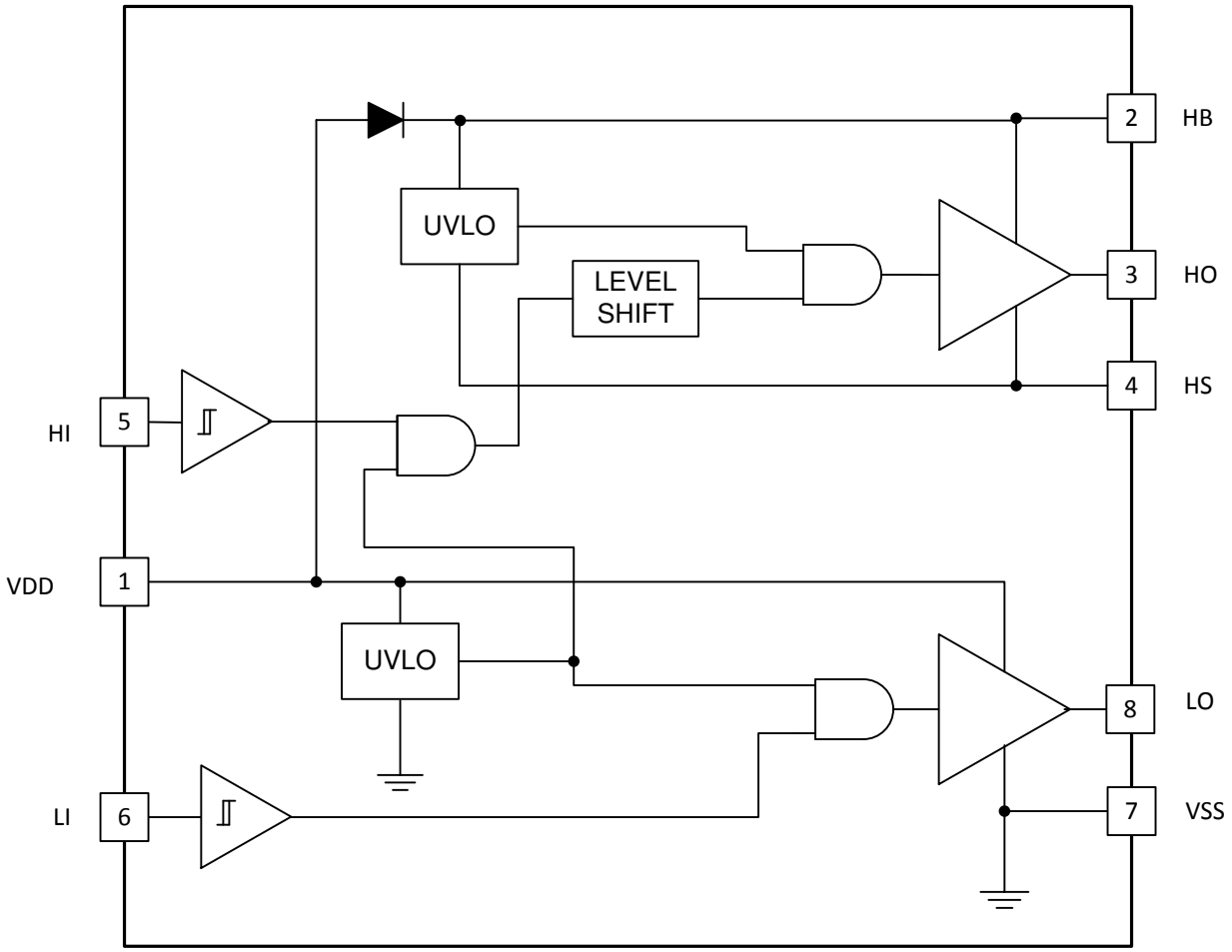

Copyright © 2017, Texas Instruments Incorporated

6.3 Feature Description

6.3.1 Input Stages

The input stages provide the interface to the PWM output signals. The input stages of the UCC27212 device have impedance of 68kΩ nominal and input capacitance is approximately 4pF. Pulldown resistance to V_{SS} (ground) is 68kΩ. The logic level compatible input provides a rising threshold of 2.3V and a falling threshold of 1.6V. There is enough input hysteresis to avoid noise related jitter issues on the input.

6.3.2 Undervoltage Lockout (UVLO)

Minor fix to input pulldown resistance typical spec to match electrical characteristics table.

The bias supplies for the high-side and low-side drivers have UVLO protection. V_{DD} as well as V_{HB} to V_{HS} differential voltages are monitored. The V_{DD} UVLO disables both drivers when V_{DD} is below the specified threshold. The rising V_{DD} threshold is 5.7V with 0.4V hysteresis. The VHB UVLO disables only the high-side driver when the V_{HB} to V_{HS} differential voltage is below the specified threshold. The V_{HB} UVLO rising threshold is 5.3V with 0.3V hysteresis.

Copyright © 2024 Texas Instruments Incorporated

6.3.3 Level Shift

The level shift circuit is the interface from the high-side input to the high-side driver stage which is referenced to the switch node (HS). The level shift allows control of the HO output referenced to the HS pin and provides excellent delay matching with the low-side driver.

6.3.4 Boot Diode

The boot diode necessary to generate the high-side bias is included in the UCC27212 family of drivers. The diode anode is connected to V_{DD} and cathode connected to V_{HB}. With the V_{HB} capacitor connected to HB and the HS pins, the V_{HB} capacitor charge is refreshed every switching cycle when HS transitions to ground. The boot diode provides fast recovery times, low diode resistance, and voltage rating margin to allow for efficient and reliable operation.

6.3.5 Output Stages

The output stages are the interface to the power MOSFETs in the power train. High slew rate, low resistance and high peak current capability of both output drivers allow for efficient switching of the power MOSFETs. The low-side output stage is referenced from V_{DD} to V_{SS} and the high side is referenced from V_{HB} to V_{HS}.

6.4 Device Functional Modes

The device operates in normal mode and UVLO mode. See the *Section 6.3.2* section for information on UVLO operation mode. In the normal mode the output state is dependent on states of the HI and LI pins. Table 6-2 lists the output states for different input pin combinations.

Table 6-2. Device Logic Table

HI PIN	LI PIN	HO(1)	LO(2)
L	L	L	L
L	H	L	H
H	L	H	L
H	H	H	H

(1) HO is measured with respect to HS.
(2) LO is measured with respect to VSS.

7 Application and Implementation

Note

Information in the following applications sections is not part of the TI component specification, and TI does not warrant its accuracy or completeness. TI's customers are responsible for determining suitability of components for their purposes, as well as validating and testing their design implementation to confirm system functionality.

7.1 Application Information

To affect fast switching of power devices and reduce associated switching power losses, a powerful gate driver is employed between the PWM output of controllers and the gates of the power semiconductor devices. Also, gate drivers are indispensable when it is impossible for the PWM controller to directly drive the gates of the switching devices. With the advent of digital power, this situation will be often encountered because the PWM signal from the digital controller is often a 3.3V logic signal which cannot effectively turn on a power switch. Level shifting circuitry is needed to boost the 3.3V signal to the gate-drive voltage (such as 12V) in order to fully turn on the power device and minimize conduction losses. Traditional buffer drive circuits based on NPN/PNP bipolar transistors in totem-pole arrangement, being emitter follower configurations, prove inadequate with digital power because they lack level-shifting capability. Gate drivers effectively combine both the level-shifting and buffer-drive functions. Gate drivers also find other needs such as minimizing the effect of high-frequency switching noise by locating the high-current driver physically close to the power switch, driving gate-drive transformers, and controlling floating power-device gates, reducing power dissipation and thermal stress in controllers by moving gate charge power losses from the controller into the driver.

Finally, emerging wide band-gap power device technologies such as GaN based switches, which are capable of supporting very high switching frequency operation, are driving very special requirements in terms of gate drive capability. These requirements include operation at low VDD voltages (5V or lower), low propagation delays and availability in compact, low-inductance packages with good thermal capability. Gate-driver devices are extremely important components in switching power, and they combine the benefits of high-performance, low-cost component count and board-space reduction as well as simplified system design.

Copyright © 2024 Texas Instruments Incorporated

7.2 Typical Application

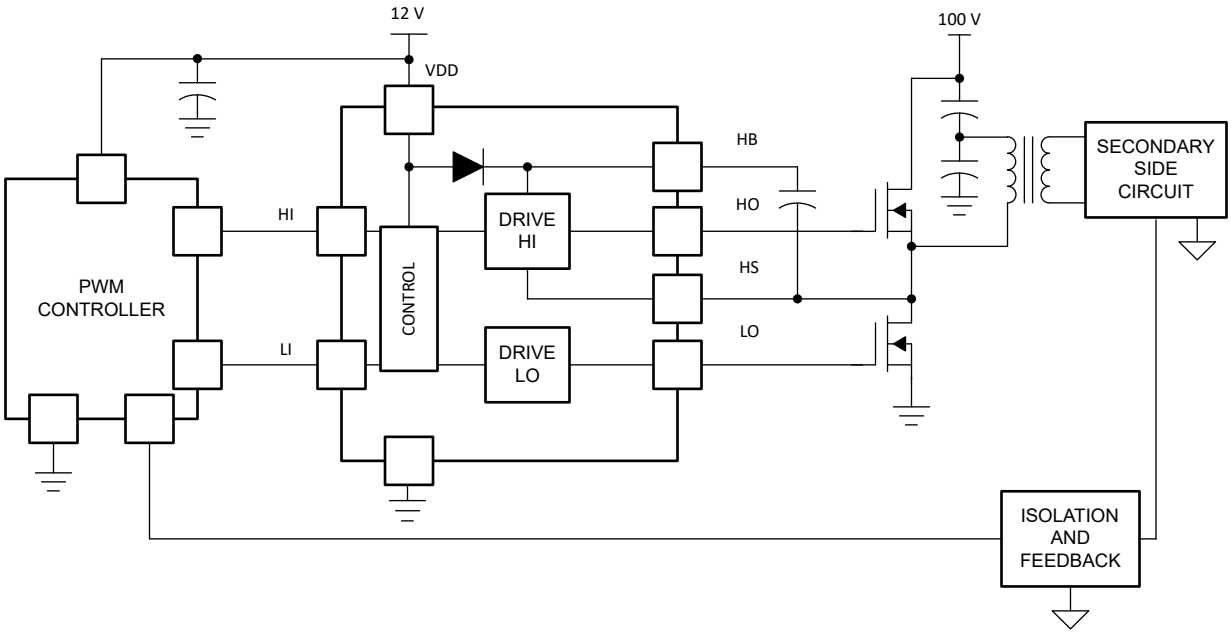

Copyright © 2017, Texas Instruments Incorporated

Figure 7-1. UCC27212 Typical Application

7.2.1 Design Requirements

For this design example, use the parameters listed in Table 7-1.

Table 7-1. Design Specifications

DESIGN PARAMETER	EXAMPLE VALUE
Supply voltage, VDD	12V
Voltage on HS, VHS	0V to 100V
Voltage on HB, VHB	12V to 112V
Output current rating, IO	–4.5A/3.7A
Operating frequency	500kHz

7.2.2 Detailed Design Procedure

7.2.2.1 Power Dissipation

Power dissipation of the gate driver has two portions as shown in Equation 1.

$$P_{DISS} = P_{DC} + P_{SW} \tag{1}$$

Use Equation 2 to calculate the DC portion of the power dissipation (PDC).

$$PDC = I_Q \times V_{DD} \tag{2}$$

where

- I_Q is the quiescent current for the driver.

The quiescent current is the current consumed by the device to bias all internal circuits such as input stage, reference voltage, logic circuits, protections, and also any current associated with switching of internal devices when the driver output changes state (such as charging and discharging of parasitic capacitances, parasitic shoot-through, and so forth). The UCC27212 features very low quiescent currents (less than 0.17mA, refer to the Section 7.2.2.1 table and contain internal logic to eliminate any shoot-through in the output driver stage. Thus the effect of the PDC on the total power dissipation within the gate driver can be safely assumed to be negligible. The power dissipated in the gate-driver package during switching (PSW) depends on the following factors:

- Gate charge required of the power device (usually a function of the drive voltage VG, which is very close to input bias supply voltage VDD)
- Switching frequency
- Use of external gate resistors. When a driver device is tested with a discrete, capacitive load calculating the power that is required from the bias supply is fairly simple. The energy that must be transferred from the bias supply to charge the capacitor is given by Equation 3.

$$EG = ½C_{LOAD} \times V_{DD}^{\ 2} \tag{3}$$

where

  - C_{LOAD} is load capacitor
  - V_{DD} is bias voltage feeding the driver

There is an equal amount of energy dissipated when the capacitor is charged and when it is discharged. This leads to a total power loss given by Equation 4.

$$PG = C_{LOAD} \times V_{DD}^{\ 2} \times f_{SW} \tag{4}$$

where

- f_{SW} is the switching frequency

The switching load presented by a power MOSFET/IGBT is converted to an equivalent capacitance by examining the gate charge required to switch the device. This gate charge includes the effects of the input capacitance plus the added charge needed to swing the drain voltage of the power device as it switches between the ON and OFF states. Most manufacturers provide specifications of typical and maximum gate charge, in nC, to switch the device under specified conditions. Using the gate charge Qg, determine the power that must be dissipated when switching a capacitor which is calculated using the equation $Q_G = C_{LOAD} \times V_{DD}$ to provide Equation 5 for power.

$$P_G = C_{LOAD} \times V_{DD}^{\ 2} \times f_{SW} = Q_G \times V_{DD} \times f_{SW} \tag{5}$$

This power P_G is dissipated in the resistive elements of the circuit when the MOSFET/IGBT is being turned on and off. Half of the total power is dissipated when the load capacitor is charged during turnon, and the other half is dissipated when the load capacitor is discharged during turnoff. When no external gate resistor is employed between the driver and MOSFET/IGBT, this power is completely dissipated inside the driver package. With the

Copyright © 2024 Texas Instruments Incorporated

use of external gate-drive resistors, the power dissipation is shared between the internal resistance of driver and external gate resistor.

7.2.3 Application Curves

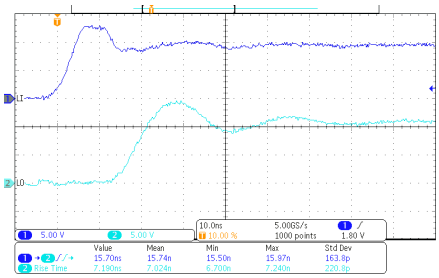

C_L = 1 nF V_{DD} = 12 V

Figure 7-2. LO Rise Time and LI to LO Turn-on Propagation Delay

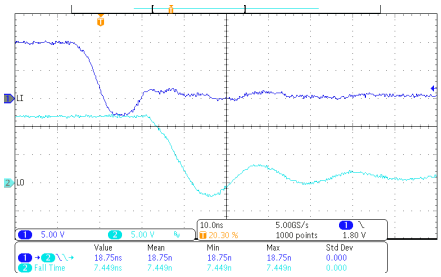

C_L = 1 nF V_{DD} = 12 V

Figure 7-3. LO Fall Time and LI to LO Turn-off Propagation Delay

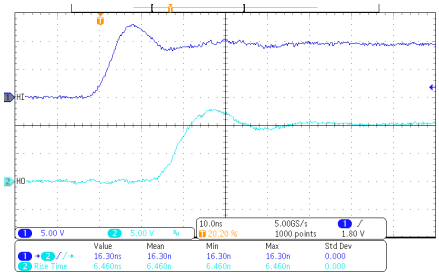

C_L = 1 nF V_{DD} = 12 V

Figure 7-4. HO Rise Time and HI to HO Turn-on Propagation Delay

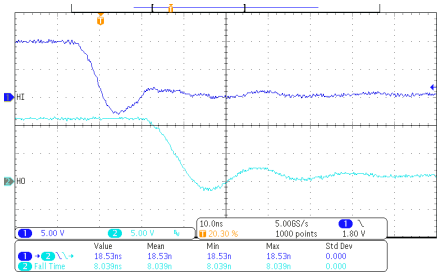

C_L = 1 nF V_{DD} = 12 V

Figure 7-5. HO Fall Time and HI to HO Turn-off Propagation Delay

8 Power Supply Recommendations

The bias supply voltage range for which the UCC27212 device is recommended to operate is from 7V to 17V. The lower end of this range is governed by the internal undervoltage-lockout (UVLO) protection feature on the V_{DD} pin supply circuit blocks. Whenever the driver is in UVLO condition when the V_{DD} pin voltage is below the $V_{(ON)}$ supply start threshold, this feature holds the output low, regardless of the status of the inputs. The upper end of this range is driven by the 20V absolute maximum voltage rating of the V_{DD} pin of the device (which is a stress rating). Keeping a 3V margin to allow for transient voltage spikes, the maximum recommended voltage for the V_{DD} pin is 17V. The UVLO protection feature also involves a hysteresis function, which means that when the V_{DD} pin bias voltage has exceeded the threshold voltage and device begins to operate, and if the voltage drops, then the device continues to deliver normal functionality unless the voltage drop exceeds the hysteresis specification $V_{DD(hys)}$. Therefore, ensuring that, while operating at or near the 7V range, the voltage ripple on the auxiliary power supply output is smaller than the hysteresis specification of the device is important to avoid triggering device shutdown. During system shutdown, the device operation continues until the V_{DD} pin voltage has dropped below the $V_{(OFF)}$ threshold, which must be accounted for while evaluating system shutdown timing design requirements. Likewise, at system start-up the device does not begin operation until the V_{DD} pin voltage has exceeded the $V_{(ON)}$ threshold.

The quiescent current consumed by the internal circuit blocks of the device is supplied through the V_{DD} pin. Although this fact is well known, it is important to recognize that the charge for source current pulses delivered by the LO pin is also supplied through the same V_{DD} pin. As a result, every time a current is sourced out of the LO pin, a corresponding current pulse is delivered into the device through the V_{DD} pin. Thus, ensure that a local bypass capacitor is provided between the V_{DD} and GND pins and located as close to the device as possible for the purpose of decoupling is important. A low-ESR, ceramic surface-mount capacitor is required. TI recommends using a capacitor in the range 0.22µF to 4.7µF between V_{DD} and GND. In a similar manner, the current pulses delivered by the HO pin are sourced from the HB pin. Therefore a 0.022µF to 0.1µF local decoupling capacitor is recommended between the HB and HS pins.

Copyright © 2024 Texas Instruments Incorporated

9 Layout

9.1 Layout Guidelines

To improve the switching characteristics and efficiency of a design, the following layout rules must be followed.

- Locate the driver as close as possible to the MOSFETs.
- Locate the V_{DD} – V_{SS} and V_{HB}-V_{HS} (bootstrap) capacitors as close as possible to the device (see Section 9.1).
- Pay close attention to the GND trace. Use the thermal pad of the package as GND by connecting it to the VSS pin (GND). The GND trace from the driver goes directly to the source of the MOSFET, but must not be in the high current path of the MOSFET drain or source current.
- Use similar rules for the HS node as for GND for the high-side driver.
- For systems using multiple UCC27212 devices, TI recommends that dedicated decoupling capacitors be located at V_{DD}–V_{SS} for each device.
- Care must be taken to avoid placing VDD traces close to LO, HS, and HO signals.
- Use wide traces for LO and HO closely following the associated GND or HS traces. A width of 60 to 100mils is preferable where possible.
- Use as least two or more vias if the driver outputs or SW node must be routed from one layer to another. For GND, the number of vias must be a consideration of the thermal pad requirements as well as parasitic inductance.
- Avoid LI and HI (driver input) going close to the HS node or any other high dV/dT traces that can induce significant noise into the relatively high impedance leads.

A poor layout can cause a significant drop in efficiency or system malfunction, and it can even lead to decreased reliability of the whole system.

Copyright © 2024 Texas Instruments Incorporated

9.2 Layout Example

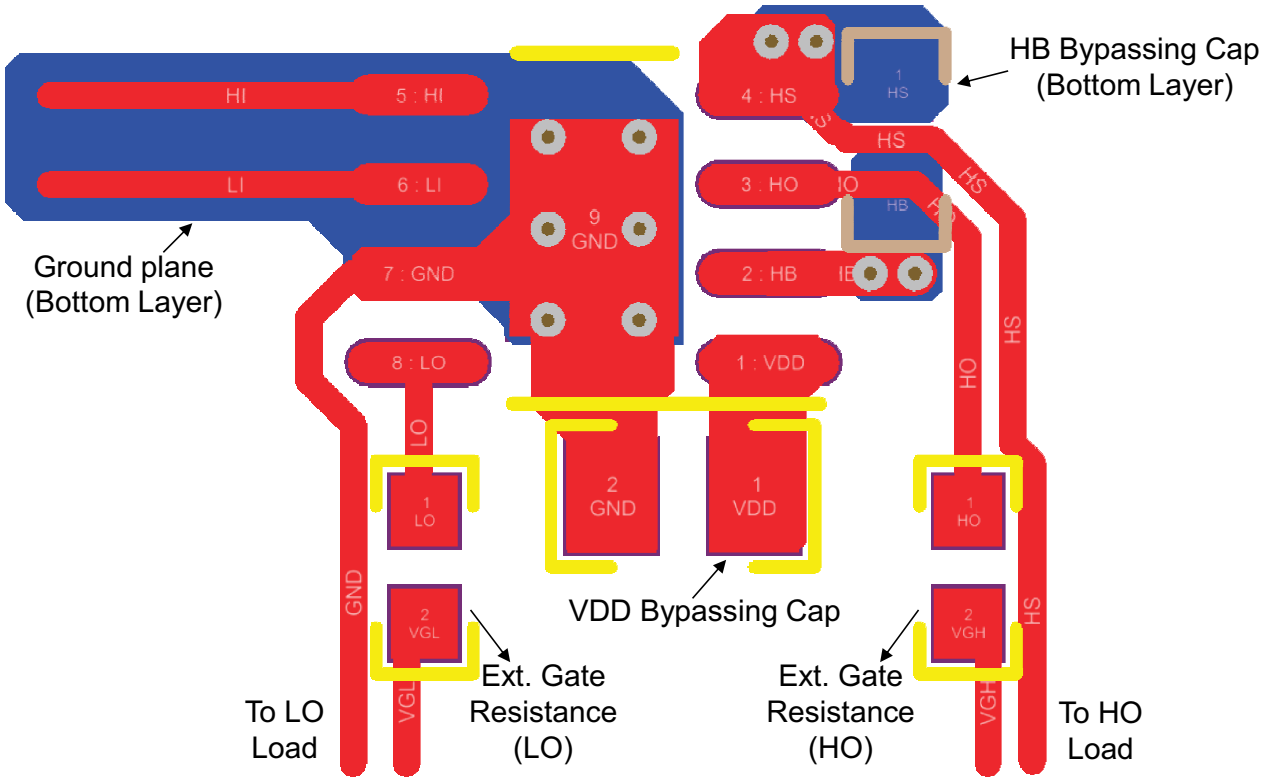

Figure 9-1. UCC27212 Layout Example

9.2.1 Thermal Considerations

The useful range of a driver is greatly affected by the drive-power requirements of the load and the thermal characteristics of the package. For a gate driver to be useful over a particular temperature range, the package must allow for efficient removal of the heat produced while keeping the junction temperature within rated limits. The thermal metrics for the driver package are listed in Section 9.2.1. For detailed information regarding the table, refer to the Application Note from Texas Instruments entitled *Semiconductor and IC Package Thermal Metrics* (SPRA953). The UCC27212 device is offered in SOIC (8) and VSON (8).

Copyright © 2024 Texas Instruments Incorporated

10 Device and Documentation Support

10.1 Device Support

10.1.1 Third-Party Products Disclaimer

TI'S PUBLICATION OF INFORMATION REGARDING THIRD-PARTY PRODUCTS OR SERVICES DOES NOT CONSTITUTE AN ENDORSEMENT REGARDING THE SUITABILITY OF SUCH PRODUCTS OR SERVICES OR A WARRANTY, REPRESENTATION OR ENDORSEMENT OF SUCH PRODUCTS OR SERVICES, EITHER ALONE OR IN COMBINATION WITH ANY TI PRODUCT OR SERVICE.

10.2 Documentation Support

10.2.1 Related Documentation

For related documentation see the following:

- PowerPAD™ Thermally Enhanced Package, Application Report
- PowerPAD™ Made Easy, Application Report

10.3 Receiving Notification of Documentation Updates

To receive notification of documentation updates, navigate to the device product folder on ti.com. Click on *Notifications* to register and receive a weekly digest of any product information that has changed. For change details, review the revision history included in any revised document.

10.4 Support Resources

TI E2E™ support forums are an engineer's go-to source for fast, verified answers and design help — straight from the experts. Search existing answers or ask your own question to get the quick design help you need.

Linked content is provided "AS IS" by the respective contributors. They do not constitute TI specifications and do not necessarily reflect TI's views; see TI's Terms of Use.

10.5 Trademarks

TI E2E™ is a trademark of Texas Instruments.
All trademarks are the property of their respective owners.

10.6 Electrostatic Discharge Caution

This integrated circuit can be damaged by ESD. Texas Instruments recommends that all integrated circuits be handled with appropriate precautions. Failure to observe proper handling and installation procedures can cause damage.

ESD damage can range from subtle performance degradation to complete device failure. Precision integrated circuits may be more susceptible to damage because very small parametric changes could cause the device not to meet its published specifications.

10.7 Glossary

TI Glossary	This glossary lists and explains terms, acronyms, and definitions.

11 Revision History

NOTE: Page numbers for previous revisions may differ from page numbers in the current version.

Changes from Revision A (April 2018) to Revision B (July 2024) **Page**

- Changed document title to reflect the device's key features. 1
- Changed several specifications to reflect the device characteristics..... 1
- Changed Features section: 1) Changed sink/source current to use exact typical specification, no change in actual device specification (From: 4-A/4-A To: 3.7-A/4.5-A). 2) Changed T_J to match improved device specification (From: Specified from -40°C to +140°C. To: Specified from -40°C to +150°C junction temperature range). 1
- Updated Applications section with list of top 5 typical applications..... 1
- Changed Description section: 1) Changed peak currents (From: 4-A source and 4-A sink. To: 3.7A source and 4.5A sink). 2) Changed 5-V turn-off UVLO (From: 5-V UVLO. To: 5-V turn-off UVLO). 3) Changed format for package name from WSON (10) to DPR (WSON, 10). 4) Changed HS pin tolerance to reflect specification in Electrical Characteristics table (From: -18V. To: -(24V-VDD)). 5) Updated propagation delay plot. 1
- Updated Pin Functions table to remove DDA and DRM packages, since UCC27212 is only available in DPR package..... 3
- Updated Recommended Operating Conditions: Operating Junction Temperature maximum changed from 140°C to 150°C..... 4
- Updated Thermal Information section to reflect device characteristics. 4
- Updated Electrical Characteristics and Switching Characteristics tables to remove specifications for 6.8V VDD, leaving the specifications for 12V VDD test condtion, as typically done in gate driver datasheets. 4
- Updated Supply Currents specifications in the Electrical Characteristics table: 1) Minimum specification removed for I_{DD}, I_{DDO}, I_{HB} and I_{HBO}. 2) I_{DD} typical changed (From: 0.085mA. To: 0.11mA). 3) I_{DDO} typical changed (From: 2.5mA. To: 1.4mA). 4) I_{DDO} maximum changed (From: 6.5mA. To: 3mA. 5) I_{HBO} typical changed (From: 2.5mA. To: 1.3mA). 6) I_{HBO} maximum changed (From: 5.1mA. To: 3mA). 8) I_{HBS} test condition changed to match V_{HS} maximum recommended operating conditions (From: 115V. To: 100V). 9) I_{HBSO} typical changed (From: 0.07mA. To: 0.03mA). 10) I_{HBSO} maximum changed (From: 1.2mA. To: 1mA). . 4
- Updated Bootstrap diode specifications in the Electrical Characteristics table: 1) V_F maximum changed (From: 0.8V. To: 0.85V). 2) V_{FI} typical changed (From: 0.85V. To: 0.9V), and maximum changed (From: 0.95V. To: 1.05V). 3) R_D test conditions changed (From: 100mA and 80mA. To: 180mA and 160mA). 4) R_D typical changed (From: 0.5Ω. To: 0.55Ω). 4
- Updated LO/HO Gate Driver specifications in the Electrical Characteristics table: 1) Minimum specification removed for V_{LOL}, V_{LOH}, V_{HOL}, V_{HOH}. 2) V_{LOL} and V_{HOL} typical changed (From 0.1V. To 0.07V). 3) V_{LOH} and V_{HOH} typical changed (From: 0.16V. To: 0.11V)..... 4
- Updated Propagation Delays specifications in the Switching Characteristics table: 1) Changed T_{DLFF} and T_{DHFF} typicals (From: 16ns. To: 19ns). Updated Output Rise and Fall Time specifications in the Switching Characteristis table: 1) t_R with 1000pF C_{LOAD} changed (From: 7.8ns typical. To: 7.2ns typical). 2) t_F with 1000pF C_{LOAD} changed (From: 6ns typical. To: 5.5ns typical). 3) t_R with 1uF C_{LOAD} changed (From: 0.36us typical. To: 0.27us typical). 4) t_F with 0.1uF C_{LOAD} changed (From: 0.20us typical. To: 0.16us typical). 4
- Updated Miscellaneous specifications in the Switching Characteristics table: t_{IN_PW} maximum changed (From: 100ns. To: 40ns)..... 4
- Updated all plots in Typical Characteristics section to reflect the typical specification of the device. 8
- Changed typical specifications mentioned in the Overview section to match the device specifications in the Electrical Characteristics table..... 11
- Changed Input Stages section to match the input pulldown resistance typical specification in the electrical characteristics table (From: 70kΩ. To: 68kΩ). 12
- Changed Undervoltage Lockout (UVLO) section to VHB UVLO hysteresis to match electrical characteristics table (From: 0.4V. To: 0.3V)..... 12
- Changed application curves to display propagation delay and rise/fall time plots. 17

Copyright © 2024 Texas Instruments Incorporated

Changes from Revision * (June 2017) to Revision A (April 2018)	Page
• Changed From: 5-V to 17-V VDD Operating Range, (20-V ABS Maximum) To: 7-V to 17-V VDD Operating Range, (20-V ABS Maximum)	1

12 Mechanical, Packaging, and Orderable Information

The following pages include mechanical, packaging, and orderable information. This information is the most current data available for the designated devices. This data is subject to change without notice and revision of this document. For browser-based versions of this data sheet, refer to the left-hand navigation.

Copyright © 2024 Texas Instruments Incorporated

PACKAGING INFORMATION

Orderable part number	Status (1)	Material type (2)	Package | Pins	Package qty | Carrier	RoHS (3)	Lead finish/ Ball material (4)	MSL rating/ Peak reflow (5)	Op temp (°C)	Part marking (6)
UCC27212DPRR	Active	Production	WSON (DPR) | 10	3000 | LARGE T&R	Yes	NIPDAU	Level-2-260C-1 YEAR	-40 to 150	UCC 27212
UCC27212DPRR.A	Active	Production	WSON (DPR) | 10	3000 | LARGE T&R	Yes	NIPDAU	Level-2-260C-1 YEAR	-40 to 150	UCC 27212
UCC27212DPRR.B	Active	Production	WSON (DPR) | 10	3000 | LARGE T&R	Yes	NIPDAU	Level-2-260C-1 YEAR	-40 to 150	UCC 27212
UCC27212DPRT	Obsolete	Production	WSON (DPR) | 10	-	-	Call TI	Call TI	-40 to 140	UCC 27212

(1) **Status:** For more details on status, see our product life cycle.

(2) **Material type:** When designated, preproduction parts are prototypes/experimental devices, and are not yet approved or released for full production. Testing and final process, including without limitation quality assurance, reliability performance testing, and/or process qualification, may not yet be complete, and this item is subject to further changes or possible discontinuation. If available for ordering, purchases will be subject to an additional waiver at checkout, and are intended for early internal evaluation purposes only. These items are sold without warranties of any kind.

(3) **RoHS values:** Yes, No, RoHS Exempt. See the TI RoHS Statement for additional information and value definition.

(4) **Lead finish/Ball material:** Parts may have multiple material finish options. Finish options are separated by a vertical ruled line. Lead finish/Ball material values may wrap to two lines if the finish value exceeds the maximum column width.

(5) **MSL rating/Peak reflow:** The moisture sensitivity level ratings and peak solder (reflow) temperatures. In the event that a part has multiple moisture sensitivity ratings, only the lowest level per JEDEC standards is shown. Refer to the shipping label for the actual reflow temperature that will be used to mount the part to the printed circuit board.

(6) **Part marking:** There may be an additional marking, which relates to the logo, the lot trace code information, or the environmental category of the part.

Multiple part markings will be inside parentheses. Only one part marking contained in parentheses and separated by a "~" will appear on a part. If a line is indented then it is a continuation of the previous line and the two combined represent the entire part marking for that device.

Important Information and Disclaimer: The information provided on this page represents TI's knowledge and belief as of the date that it is provided. TI bases its knowledge and belief on information provided by third parties, and makes no representation or warranty as to the accuracy of such information. Efforts are underway to better integrate information from third parties. TI has taken and continues to take reasonable steps to provide representative and accurate information but may not have conducted destructive testing or chemical analysis on incoming materials and chemicals. TI and TI suppliers consider certain information to be proprietary, and thus CAS numbers and other limited information may not be available for release.

In no event shall TI's liability arising out of such information exceed the total purchase price of the TI part(s) at issue in this document sold by TI to Customer on an annual basis.

TAPE AND REEL INFORMATION

REEL DIMENSIONS

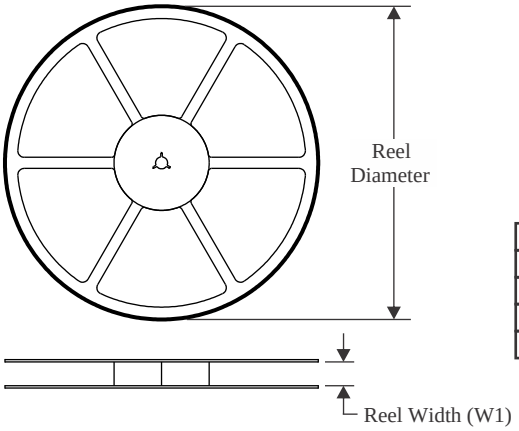

TAPE DIMENSIONS

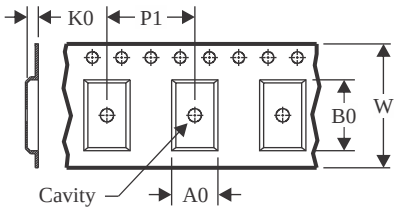

A0	Dimension designed to accommodate the component width
B0	Dimension designed to accommodate the component length
K0	Dimension designed to accommodate the component thickness
W	Overall width of the carrier tape
P1	Pitch between successive cavity centers

QUADRANT ASSIGNMENTS FOR PIN 1 ORIENTATION IN TAPE

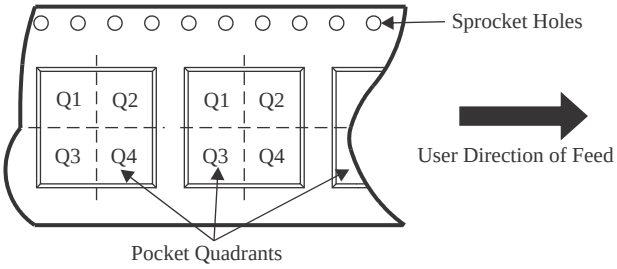

*All dimensions are nominal

Device	Package Type	Package Drawing	Pins	SPQ	Reel Diameter (mm)	Reel Width W1 (mm)	A0 (mm)	B0 (mm)	K0 (mm)	P1 (mm)	W (mm)	Pin1 Quadrant
UCC27212DPRR	WSON	DPR	10	3000	330.0	12.4	4.25	4.25	1.15	8.0	12.0	Q2
UCC27212DPRR	WSON	DPR	10	3000	330.0	12.4	4.25	4.25	1.15	8.0	12.0	Q2

TAPE AND REEL BOX DIMENSIONS

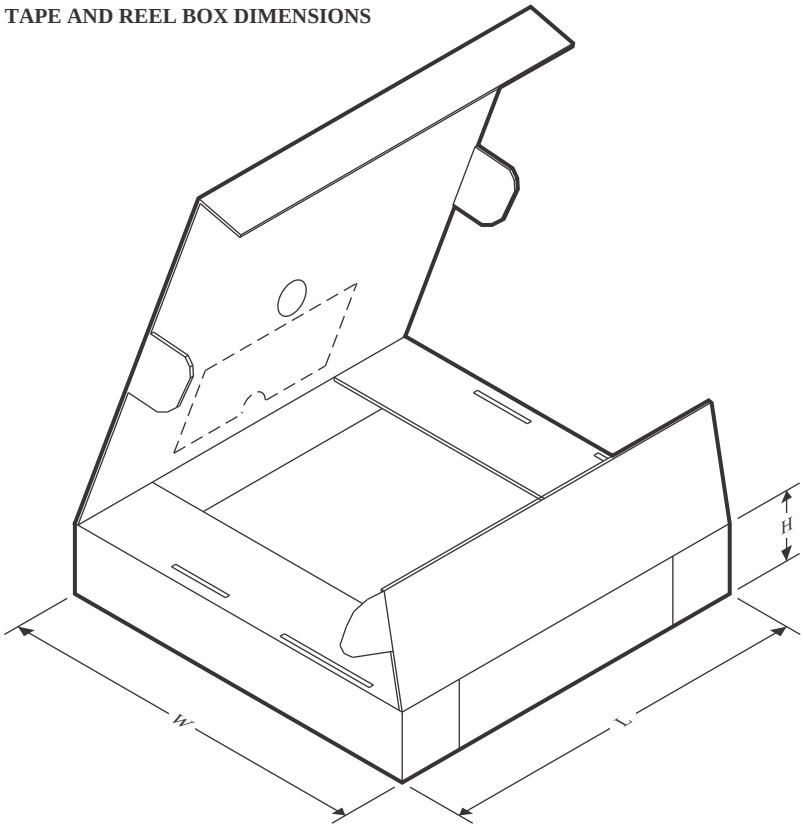

*All dimensions are nominal

Device	Package Type	Package Drawing	Pins	SPQ	Length (mm)	Width (mm)	Height (mm)
UCC27212DPRR	WSON	DPR	10	3000	346.0	346.0	33.0
UCC27212DPRR	WSON	DPR	10	3000	367.0	367.0	35.0

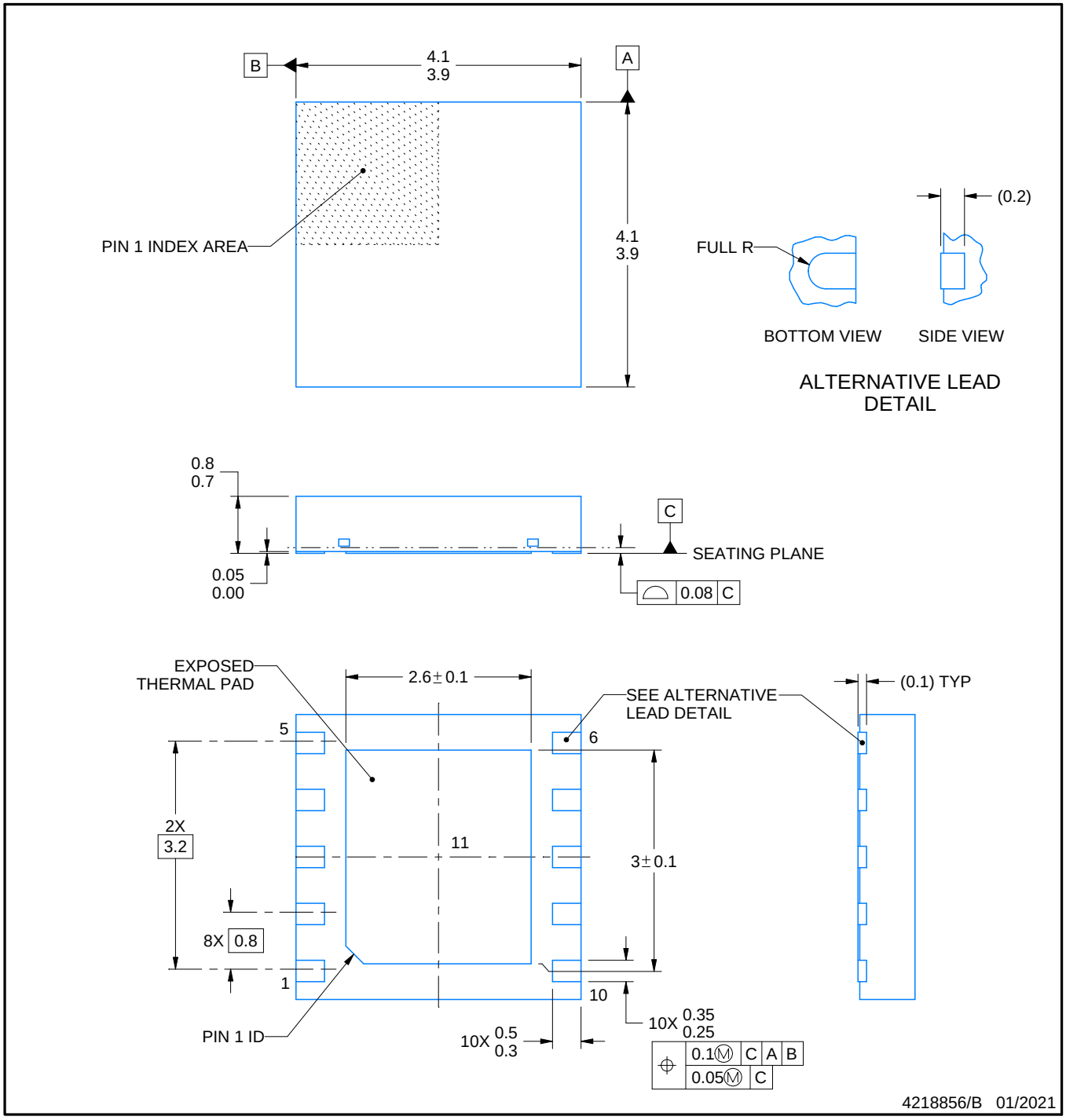

NOTES:

1. All linear dimensions are in millimeters. Any dimensions in parenthesis are for reference only. Dimensioning and tolerancing per ASME Y14.5M.
2. This drawing is subject to change without notice.
3. The package thermal pad must be soldered to the printed circuit board for thermal and mechanical performance.

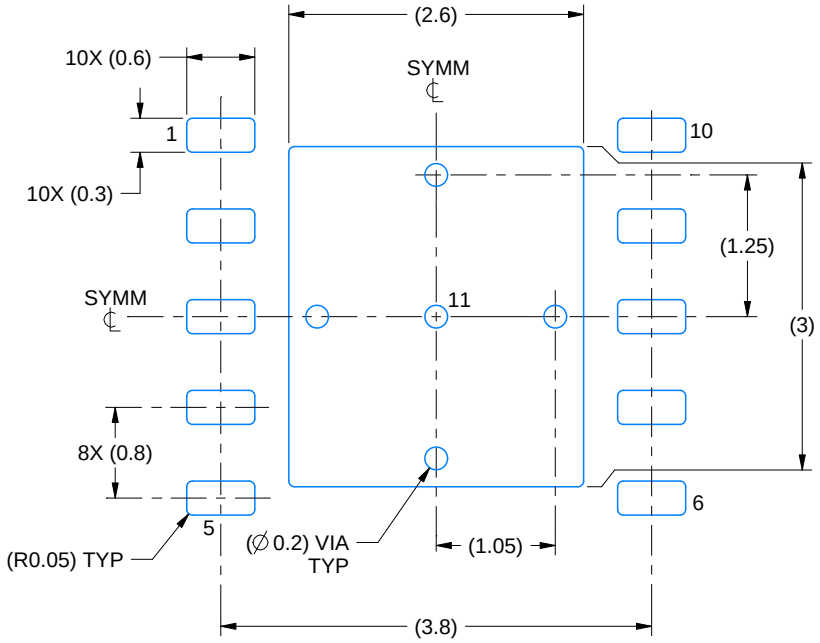

LAND PATTERN EXAMPLE
EXPOSED METAL SHOWN
SCALE:15X

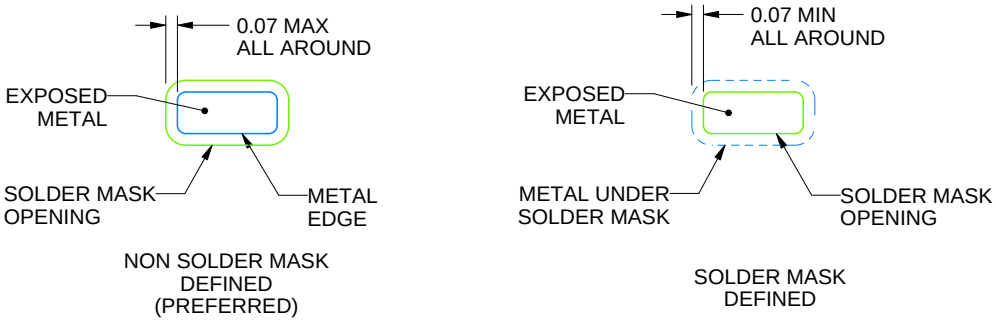

SOLDER MASK DETAILS

4218856/B 01/2021

NOTES: (continued)

4. This package is designed to be soldered to a thermal pad on the board. For more information, see Texas Instruments literature number SLUA271 (www.ti.com/lit/slua271).

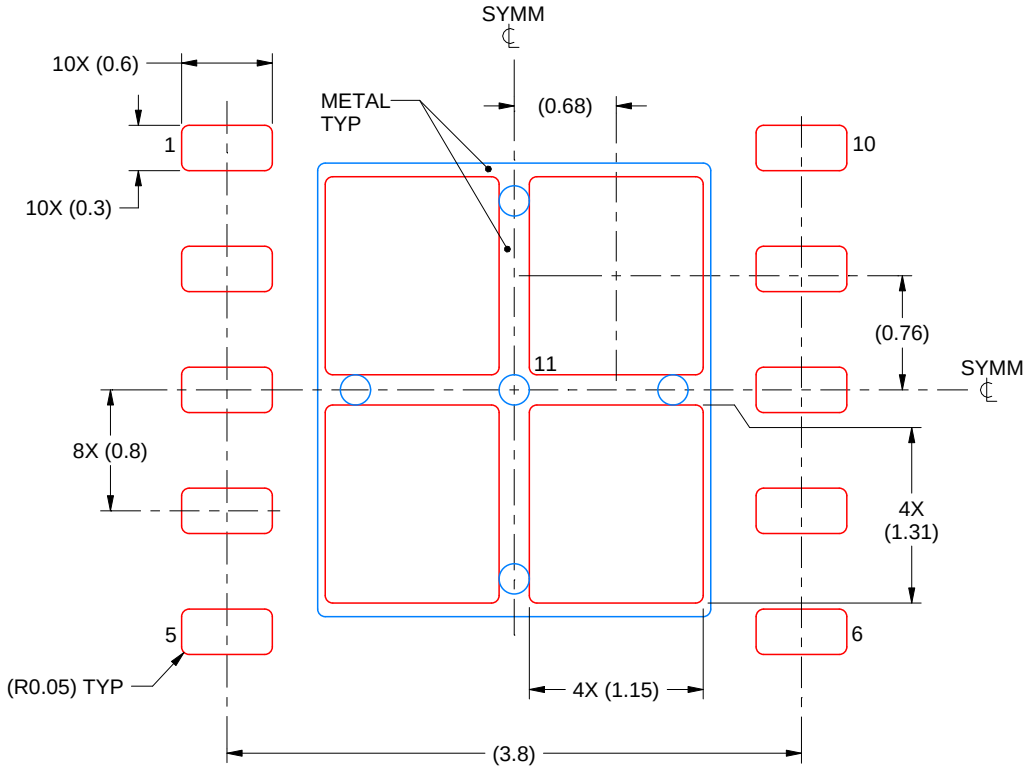

SOLDER PASTE EXAMPLE
BASED ON 0.125 mm THICK STENCIL

EXPOSED PAD 11:
77% PRINTED SOLDER COVERAGE BY AREA
SCALE:20X

4218856/B 01/2021

NOTES: (continued)

5. Laser cutting apertures with trapezoidal walls and rounded corners may offer better paste release. IPC-7525 may have alternate design recommendations.

IMPORTANT NOTICE AND DISCLAIMER

TI PROVIDES TECHNICAL AND RELIABILITY DATA (INCLUDING DATA SHEETS), DESIGN RESOURCES (INCLUDING REFERENCE DESIGNS), APPLICATION OR OTHER DESIGN ADVICE, WEB TOOLS, SAFETY INFORMATION, AND OTHER RESOURCES “AS IS” AND WITH ALL FAULTS, AND DISCLAIMS ALL WARRANTIES, EXPRESS AND IMPLIED, INCLUDING WITHOUT LIMITATION ANY IMPLIED WARRANTIES OF MERCHANTABILITY, FITNESS FOR A PARTICULAR PURPOSE OR NON-INFRINGEMENT OF THIRD PARTY INTELLECTUAL PROPERTY RIGHTS.

These resources are intended for skilled developers designing with TI products. You are solely responsible for (1) selecting the appropriate TI products for your application, (2) designing, validating and testing your application, and (3) ensuring your application meets applicable standards, and any other safety, security, regulatory or other requirements.

These resources are subject to change without notice. TI grants you permission to use these resources only for development of an application that uses the TI products described in the resource. Other reproduction and display of these resources is prohibited. No license is granted to any other TI intellectual property right or to any third party intellectual property right. TI disclaims responsibility for, and you will fully indemnify TI and its representatives against, any claims, damages, costs, losses, and liabilities arising out of your use of these resources.

TI’s products are provided subject to TI’s Terms of Sale or other applicable terms available either on ti.com or provided in conjunction with such TI products. TI’s provision of these resources does not expand or otherwise alter TI’s applicable warranties or warranty disclaimers for TI products.

TI objects to and rejects any additional or different terms you may have proposed.

Mailing Address: Texas Instruments, Post Office Box 655303, Dallas, Texas 75265
Copyright © 2025, Texas Instruments Incorporated