ADSxx53 Dual, High-Speed, 16-, 14-, and 12-Bit, Simultaneous-Sampling, Analog-to-Digital Converters

1 Features

- 16-, 14-, and 12-Bit, Pin-Compatible Family
- Simultaneous Sampling of Two Channels
- Supports Single-Ended and Pseudo-Differential Inputs
- High Speed:
  - ADS8353: 16 Bits, 600 kSPS
  - ADS7853: 14 Bits, 1 MSPS
  - ADS7253: 12 Bits, 1 MSPS
- Excellent DC Performance:
  - ADS8353:
    - 16-Bit NMC DNL, ±2.5-LSB Max INL
  - ADS7853:
    - 14-Bit NMC DNL, ±2-LSB Max INL
  - ADS7253:
    - 12-Bit NMC DNL, ±1-LSB Max INL
- Excellent AC Performance:
  - ADS8353:
    - 89-dB SNR, –100-dB THD
  - ADS7853:
    - 82-dB SNR, –90-dB THD
  - ADS7253:
    - 72-dB SNR, –90-dB THD
- Dual, Programmable, and Buffered 2.5-V Internal Reference
- Fully-Specified Over the Extended Industrial Temperature Range: –40°C to 125°C
- Small Footprint: WQFN-16 (3-mm × 3-mm) and TSSOP-16

2 Applications

- Motor Control: Position Measurement Using Encoders
- Optical Networking: EDFA Gain Control Loops
- Protection Relays
- Power Quality Measurement
- Three-Phase Power Controls
- Programmable Logic Controllers

3 Description

The ADS8353, ADS7853, and ADS7253 belong to a family of pin-compatible, dual, high-speed, simultaneous-sampling, analog-to-digital converters (ADCs) that support single-ended and pseudo-differential analog inputs.

Each device includes two individually programmable reference sources that can be used for system-level gain calibration. Also, a flexible serial interface that can operate over a wide power-supply range enables easy communication with a large variety of host controllers. Power consumption for a given throughput can be optimized by using the two low-power modes supported by the device. All devices are fully specified over the extended industrial temperature range (–40°C to 125°C) and are available in pin-compatible, WQFN-16 (3-mm × 3-mm) and TSSOP-16 packages.

Device Information(1)

PART NUMBER	PACKAGE	BODY SIZE (NOM)
ADSxx53	TSSOP (16)	5.00 mm × 4.40 mm
	WQFN (16)	3.00 mm × 3.00 mm

(1) For all available packages, see the orderable addendum at the end of the datasheet.

Typical Application Diagram

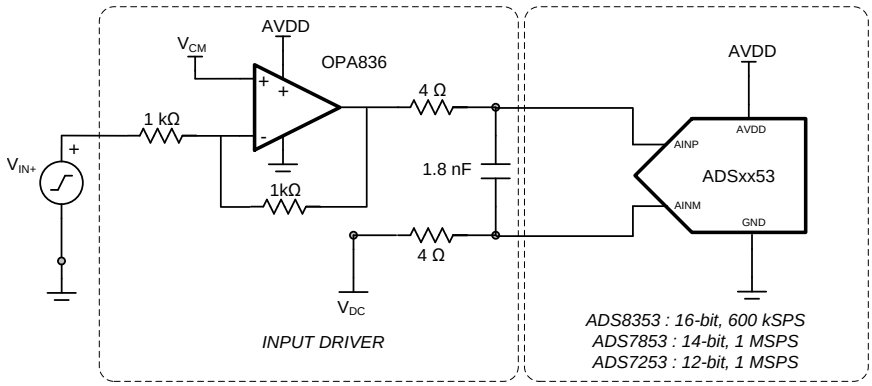

An IMPORTANT NOTICE at the end of this data sheet addresses availability, warranty, changes, use in safety-critical applications, intellectual property matters and other important disclaimers. PRODUCTION DATA.

Table of Contents

1 Features ... 1
2 Applications ... 1
3 Description ... 1
4 Revision History ... 2
5 Device Comparison Table ... 3
6 Pin Configurations and Functions ... 4
7 Specifications ... 5
7.1 Absolute Maximum Ratings ... 5
7.2 Handling Ratings ... 5
7.3 Recommended Operating Conditions ... 5
7.4 Thermal Information ... 5
7.5 Electrical Characteristics: ADS8353 ... 6
7.6 Electrical Characteristics: ADS7853 ... 7
7.7 Electrical Characteristics: ADS7253 ... 8
7.8 Electrical Characteristics: All Devices ... 9
7.9 Timing Requirements: Interface Mode ... 11
7.10 Timing Characteristics: Serial Interface ... 11
7.11 Typical Characteristics: ADS8353 ... 13
7.12 Typical Characteristics: ADS7853 ... 17
7.13 Typical Characteristics: ADS7253 ... 22
7.14 Typical Characteristics: Common to ADS8353, ADS7853, and ADS7253 ... 27
8 Detailed Description ... 28
8.1 Overview ... 28
8.2 Functional Block Diagram ... 28
8.3 Feature Description ... 29
8.4 Device Functional Modes ... 35
8.5 Register Maps and Serial Interface ... 35
9 Application and Implementation ... 49
9.1 Application Information ... 49
9.2 Typical Applications ... 51
10 Power-Supply Recommendations ... 59
11 Layout ... 60
11.1 Layout Guidelines ... 60
11.2 Layout Example ... 60
12 Device and Documentation Support ... 61
12.1 Related Links ... 61
12.2 Related Documentation ... 61
12.3 Trademarks ... 61
12.4 Electrostatic Discharge Caution ... 61
12.5 Glossary ... 61
13 Mechanical, Packaging, and Orderable Information ... 61

4 Revision History

Changes from Revision A (July 2014) to Revision B	Page
• Made changes to the ADS8353 preview device and moved to Production Data status	1
• Changed document status from Mixed Status to Production Data	1
• Corrected cross-reference for Figure 99	48

Changes from Original (October 2013) to Revision A	Page
• Made changes to product preview data sheet	1

Copyright © 2013–2014, Texas Instruments Incorporated

5 Device Comparison Table

PRODUCT	RESOLUTION (Bits)	INPUT CONFIGURATION	NMC (Bits)	INL (LSB)	SNR (dB)
ADS8354	16	Fully-differential	16	±2.5	93 (typ)
ADS7854	14	Fully-differential	14	±1.5	88 (typ)
ADS7254	12	Fully-differential	12	±1	74 (typ)
ADS8353	16	Single-ended and pseudo-differential	16	±2.5	89 (typ)
ADS7853	14	Single-ended and pseudo-differential	14	±2	84 (typ)
ADS7253	12	Single-ended and pseudo-differential	12	±1	73.5 (typ)

Copyright © 2013–2014, Texas Instruments Incorporated

6 Pin Configurations and Functions

RTE Package
WQFN-16
(Top View)

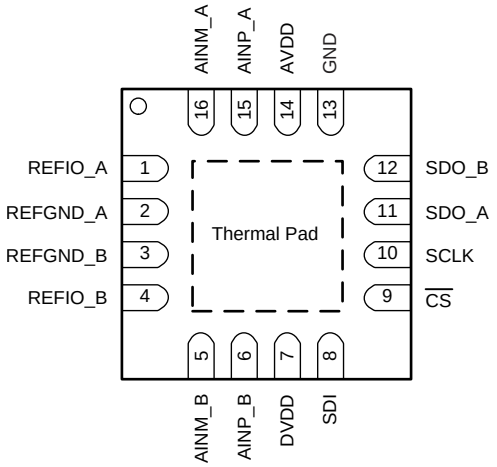

PW Package
TSSOP-16
(Top View)

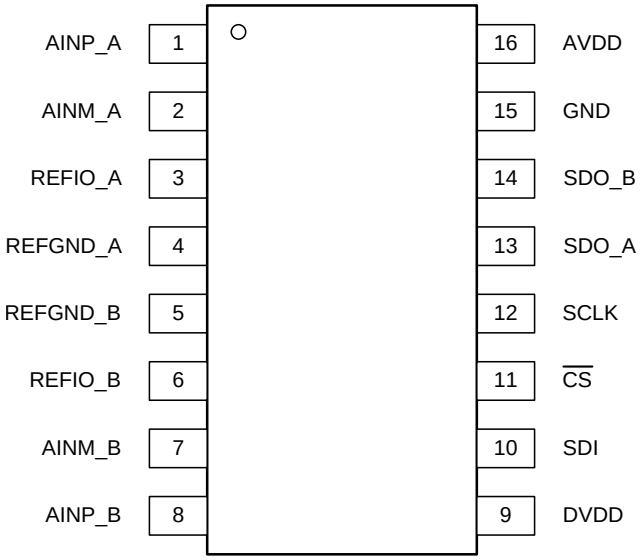

Pin Functions

PIN			I/O	DESCRIPTION
	NO.			
NAME	TSSOP	WQFN		
AINM_A	2	16	Analog input	Negative analog input, channel A
AINM_B	7	5	Analog input	Negative analog input, channel B
AINP_A	1	15	Analog input	Positive analog input, channel A
AINP_B	8	6	Analog input	Positive analog input, channel B
AVDD	16	14	Supply	Supply voltage for ADC operation
$\overline{CS}$	11	9	Digital input	Chip-select signal; active low
DVDD	9	7	Digital I/O supply	Digital I/O supply
GND	15	13	Supply	Digital ground
REFGND_A	4	2	Supply	Reference ground potential A
REFGND_B	5	3	Supply	Reference ground potential B
REFIO_A	3	1	Analog input/output	Reference voltage input/output, channel A
REFIO_B	6	4	Analog input/output	Reference voltage input/output, channel B
SCLK	12	10	Digital input	Clock for serial communication
SDI	10	8	Digital input	Data input for serial communication
SDO_A	13	11	Digital output	Data output for serial communication, channel A and channel B
SDO_B	14	12	Digital output	Data output for serial communication, channel B
Thermal pad	—	Thermal pad	Supply	Exposed thermal pad (only for WQFN). TI recommends connecting this pin to the printed circuit board (PCB) ground.

Copyright © 2013–2014, Texas Instruments Incorporated

7 Specifications

7.1 Absolute Maximum Ratings[(1)]

over operating free-air temperature range (unless otherwise noted)

	MIN	MAX	UNIT
AVDD to REFGND_x or DVDD to GND	–0.3	6	V
Analog (AINP_x and AINM_x) and reference input (REFIO_x) voltage with respect to REFGND_x	REFGND_x – 0.3	AVDD + 0.3	V
Digital input voltage with respect to GND	GND – 0.3	DVDD + 0.3	V
Ground voltage difference |REFGND_x-GND|		0.3	V
Input current to any pin except supply pins		±10	mA
Maximum virtual junction temperature, T_J		150	°C

(1) Stresses beyond those listed under *Absolute Maximum Ratings* may cause permanent damage to the device. These are stress ratings only, which do not imply functional operation of the device at these or any other conditions beyond those indicated under *Recommended Operating Conditions*. Exposure to absolute-maximum-rated conditions for extended periods may affect device reliability.

7.2 Handling Ratings

			MIN	MAX	UNIT
T_{stg}	Storage temperature range		–65	150	°C
$V_{(ESD)}$	Electrostatic discharge	Human body model (HBM), per ANSI/ESDA/JEDEC JS-001, all pins[(1)]	–2000	2000	V
		Charged device model (CDM), per JEDEC specification JESD22-C101, all pins[(2)]	–500	500	

(1) JEDEC document JEP155 states that 500-V HBM allows safe manufacturing with a standard ESD control process.
(2) JEDEC document JEP157 states that 250-V CDM allows safe manufacturing with a standard ESD control process.

7.3 Recommended Operating Conditions

over operating free-air temperature range (unless otherwise noted)

		MIN	NOM	MAX	UNIT
AVDD	Analog supply voltage		5		V
DVDD	Digital supply voltage		3.3		V

7.4 Thermal Information

THERMAL METRIC[(1)]		ADS8353, ADS7853, ADS7253		UNIT
		RTE (WQFN)	PW (TSSOP)	
		16 PINS	16 PINS	
$R_{\theta JA}$	Junction-to-ambient thermal resistance	33.3	86.9	°C/W
$R_{\theta JC(top)}$	Junction-to-case (top) thermal resistance	29.5	21	
$R_{\theta JB}$	Junction-to-board thermal resistance	7.3	39.1	
ψ_{JT}	Junction-to-top characterization parameter	0.2	0.8	
ψ_{JB}	Junction-to-board characterization parameter	7.4	38.4	
$R_{\theta JC(bot)}$	Junction-to-case (bottom) thermal resistance	0.9	N/A	

(1) For more information about traditional and new thermal metrics, see the *IC Package Thermal Metrics* application report, SPRA953.

Copyright © 2013–2014, Texas Instruments Incorporated

7.5 Electrical Characteristics: ADS8353

All minimum and maximum specifications are at T_A = –40°C to 125°C, AVDD = 5 V, DVDD = 3.3 V, V_{REF_A} = V_{REF_B} = V_{REF} = 2.5 V (internal), and f_{DATA} = 600 kSPS, unless otherwise noted.
Typical values are at T_A = 25°C, AVDD = 5 V, and DVDD = 3.3 V.

PARAMETER		TEST CONDITIONS	MIN	TYP	MAX	UNIT
RESOLUTION						
	Resolution		16			Bits
DC ACCURACY (1)						
NMC	No missing codes	32-clock mode	16			Bits
INL	Integral nonlinearity	32-clock mode	–2.5	±1	2.5	LSB
DNL	Differential nonlinearity	32-clock mode	–0.99	±0.6	2	LSB
E_{IO}	Input offset error		–1	±0.5	1	mV
	E_{IO} match	ADC_A to ADC_B	–1	±0.5	1	mV
dE_{IO}/dT	Input offset thermal drift			1		µV/°C
E_G	Gain error	Referenced to the voltage at REFIO_x	–0.1	±0.05	0.1	%FS
	E_G match	ADC_A to ADC_B	–0.1	±0.05	0.1	%FS
dE_G/dT	Gain error thermal drift	Referenced to the voltage at REFIO_x		1		ppm/°C
AC ACCURACY (2)						
SINAD	Signal-to-noise + distortion	V_{REF} = 2.5 V, V_{REF} input range, 32-clock mode	80.2	83		dB
		V_{REF} = 2.5 V, 2 × V_{REF} input range, 32-clock mode		83.9		dB
		V_{REF} = 5 V (external), V_{REF} input range, 32-clock mode		88.7		dB
SNR	Signal-to-noise ratio	V_{REF} = 2.5 V, V_{REF} input range, 32-clock mode	80.5	83		dB
		V_{REF} = 2.5 V, 2 × V_{REF} input range, 32-clock mode		84		dB
		V_{REF} = 5 V (external), V_{REF} input range, 32-clock mode		89		dB
THD	Total harmonic distortion	V_{REF} = 2.5 V, V_{REF} input range, 32-clock mode		–100		dB
		V_{REF} = 2.5 V, 2 × V_{REF} input range, 32-clock mode		–100		dB
		V_{REF} = 5 V (external), V_{REF} input range, 32-clock mode		–100		dB
SFDR	Spurious-free dynamic range	V_{REF} = 2.5 V, V_{REF} input range, 32-clock mode		105		dB
		V_{REF} = 2.5 V, 2 × V_{REF} input range, 32-clock mode		105		dB
		V_{REF} = 5 V (external), V_{REF} input range, 32-clock mode		105		dB

(1) LSB = least significant bit.
(2) All ac parameters are tested at –0.5 dBFS and a 2-kHz input frequency.

Copyright © 2013–2014, Texas Instruments Incorporated

7.6 Electrical Characteristics: ADS7853

All minimum and maximum specifications are at T_A = –40°C to 125°C, AVDD = 5 V, DVDD = 3.3 V, V_{REF_A} = V_{REF_B} = V_{REF} = 2.5 V (internal), and f_{DATA} = 1 MSPS, unless otherwise noted.
Typical values are at T_A = 25°C, AVDD = 5 V, and DVDD = 3.3 V.

PARAMETER		TEST CONDITIONS		MIN	TYP	MAX	UNIT
RESOLUTION							
	Resolution			14			Bits
DC ACCURACY (1)							
NMC	No missing codes	32-clock mode		14			Bits
		16-clock mode		13			Bits
INL	Integral nonlinearity	32-clock mode		–2	±0.7	2	LSB
		16-clock mode		–2.5	±1	2.5	LSB
DNL	Differential nonlinearity	32-clock mode		–0.99	±0.5	1	LSB
		16-clock mode		–1	±0.9	2	LSB
E_{IO}	Input offset error			–1	±0.5	1	mV
	E_{IO} match	ADC_A to ADC_B		–1	±0.5	1	mV
dE_{IO}/dT	Input offset thermal drift				±1		µV/°C
E_G	Gain error	Referenced to the voltage at REFIO_x		–0.1	±0.05	0.1	%FS
	E_G match	ADC_A to ADC_B		–0.1	±0.05	0.1	%FS
dE_G/dT	Gain error thermal drift	Referenced to the voltage at REFIO_x			±1		ppm/°C
AC ACCURACY (2)							
SINAD	Signal-to-noise + distortion	V_{REF} = 2.5 V, V_{REF} input range	32-clock mode	78.4	80.9		dB
			16-clock mode		80.3		dB
		V_{REF} = 2.5 V, 2 × V_{REF} input range	32-clock mode		81.4		dB
			16-clock mode		80.8		dB
		V_{REF} = 5 V (external), V_{REF} input range	32-clock mode		83.9		dB
			16-clock mode		82.9		dB
SNR	Signal-to-noise ratio	V_{REF} = 2.5 V, V_{REF} input range	32-clock mode	78.5	81		dB
			16-clock mode		80.5		dB
		V_{REF} = 2.5 V, 2 × V_{REF} input range	32-clock mode		81.5		dB
			16-clock mode		81		dB
		V_{REF} = 5 V (external), V_{REF} input range	32-clock mode		84		dB
			16-clock mode		83.5		dB
THD	Total harmonic distortion	V_{REF} = 2.5 V, V_{REF} input range	32-clock mode		–100		dB
			16-clock mode		–93		dB
		V_{REF} = 2.5 V, 2 × V_{REF} input range	32-clock mode		–98		dB
			16-clock mode		–94		dB
		V_{REF} = 5 V (external), V_{REF} input range	32-clock mode		–102		dB
			16-clock mode		–92		dB
SFDR	Spurious-free dynamic range	V_{REF} = 2.5 V, V_{REF} input range	32-clock mode		100		dB
			16-clock mode		95		dB
		V_{REF} = 2.5 V, 2 × V_{REF} input range	32-clock mode		100		dB
			16-clock mode		95		dB
		V_{REF} = 5 V (external), V_{REF} input range	32-clock mode		102		dB
			16-clock mode		95		dB
ISOXT	ADC-to-ADC isolation	f_{IN} = 15 kHz at 10 %FS, f_{NOISE} = 25 kHz at FS			–100		dB

(1) LSB = least significant bit.
(2) All ac parameters are tested at –0.5 dBFS and a 2-kHz input frequency.

Copyright © 2013–2014, Texas Instruments Incorporated

7.7 Electrical Characteristics: ADS7253

All minimum and maximum specifications are at T_A = –40°C to 125°C, AVDD = 5 V, DVDD = 3.3 V, V_{REF_A} = V_{REF_B} = V_{REF} = 2.5 V (internal), and f_{DATA} = 1 MSPS, unless otherwise noted.
Typical values are at T_A = 25°C, AVDD = 5 V, and DVDD = 3.3 V.

PARAMETER		TEST CONDITIONS	MIN	TYP	MAX	UNIT
RESOLUTION						
	Resolution		12			Bits
DC ACCURACY (1)						
NMC	No missing codes		12			Bits
INL	Integral nonlinearity		–1	±0.3	1	LSB
DNL	Differential nonlinearity		–0.99	±0.3	1	LSB
E_{IO}	Input offset error		–2	±0.5	2	mV
	E_{IO} match	ADC_A to ADC_B	–2	±0.5	2	mV
dE_{IO}/dT	Input offset thermal drift			±1		µV/°C
E_G	Gain error	Referenced to the voltage at REFIO_x	–0.2	±0.05	0.2	%FS
	E_G match	ADC_A to ADC_B	–0.2	±0.05	0.2	%FS
dE_G/dT	Gain error thermal drift	Referenced to the voltage at REFIO_x		±1		ppm/°C
AC ACCURACY (2)						
SINAD	Signal-to-noise + distortion	V_{REF} = 2.5 V, V_{REF} input range	71	72.9		dB
		V_{REF} = 2.5 V, 2 × V_{REF} input range		72.9		dB
		V_{REF} = 5 V (external), V_{REF} input range		73.4		dB
SNR	Signal-to-noise ratio	V_{REF} = 2.5 V, V_{REF} input range	71.5	73		dB
		V_{REF} = 2.5 V, 2 × V_{REF} input range		73		dB
		V_{REF} = 5 V (external), V_{REF} input range		73.5		dB
THD	Total harmonic distortion	V_{REF} = 2.5 V, V_{REF} input range		–90		dB
		V_{REF} = 2.5 V, 2 × V_{REF} input range		–90		dB
		V_{REF} = 5 V (external), V_{REF} input range		–90		dB
SFDR	Spurious-free dynamic range	V_{REF} = 2.5 V, V_{REF} input range		93.5		dB
		V_{REF} = 2.5 V, 2 × V_{REF} input range		93.5		dB
		V_{REF} = 5 V (external), V_{REF} input range		93.5		dB
ISOXT	ADC-to-ADC isolation	f_{IN} = 15 kHz at 10 %FS, f_{NOISE} = 25 kHz at FS		–80		dB

(1) LSB = least significant bit.
(2) All ac parameters are tested at –0.5 dBFS and a 2-kHz input frequency.

Copyright © 2013–2014, Texas Instruments Incorporated

7.8 Electrical Characteristics: All Devices

All minimum and maximum specifications are at T_A = –40°C to 125°C, AVDD = 5 V, DVDD = 3.3 V, V_{REF_A} = V_{REF_B} = V_{REF} = 2.5 V, and f_{DATA} = maximum, unless otherwise noted.
Typical values are at T_A = 25°C, AVDD = 5 V, and DVDD = 3.3 V.

PARAMETER		TEST CONDITIONS		MIN	TYP	MAX	UNIT
ANALOG INPUT							
FSR	Full-scale input range(1) (AINP_x – AINM_x)	V_{REF} range	Single-ended input, AINM_x = GND	0		V_{REF}	V
			Pseudo-differential input, AINM_x = +V_{REF} / 2	–V_{REF} / 2		V_{REF} / 2	V
		2 × V_{REF} range	Single-ended input, AINM_x = GND, AVDD ≥ 2 × V_{REF}	0		2 × V_{REF}	V
			Pseudo-differential input, AINM_x = +V_{REF}, AVDD ≥ 2 × V_{REF}	–V_{REF}		V_{REF}	V
V_{INP}	Absolute input voltage (AINP_x to REFGND)	V_{REF} range		0		V_{REF}	V
		2 × V_{REF} range, AVDD ≥ 2 × V_{REF}		0		2 × V_{REF}	V
V_{INM}	Absolute input voltage (AINM_x to REFGND)	V_{REF} range	Single-ended input	–0.1		0.1	V
			Pseudo-differential input	V_{REF} / 2 – 0.1	V_{REF} / 2	V_{REF} / 2 + 0.1	V
		2 × V_{REF} range	Single-ended input, AVDD ≥ 2 × V_{REF}	–0.1		0.1	V
			Pseudo-differential input, AVDD ≥ 2 × V_{REF}	V_{REF} – 0.1	V_{REF}	V_{REF} + 0.1	V
C_i	Input capacitance	In sample mode			40		pF
		In hold mode			4		pF
$I_{lkg(i)}$	Input leakage current				0.1		µA
INTERNAL VOLTAGE REFERENCE							
V_{REFOUT}	Reference output voltage	REFDAC_x = 1FFh (default), at 25°C		2.495	2.500	2.505	V
$V_{REF\text{-}match}$	V_{REF_A} to V_{REF_B} matching	REFDAC_x = 1FFh (default), at 25°C			±1		mV
	REFDAC_x resolution(2)				1.1		mV
dV_{REFOUT}/dT	Reference voltage temperature drift	REFDAC_x = 1FFh (default)			±10		ppm/°C
dV_{REFOUT}/dt	Long-term stability	1000 hours			150		ppm
R_O	Internal reference output impedance				1		Ω
I_{REFOUT}	Reference output dc current				2		mA
C_{REFOUT}	Recommended output capacitor				10		µF
t_{REFON}	Reference output settling time	For C_{REF} = 10 µF			8		ms
VOLTAGE REFERENCE INPUT							
V_{REF}	Reference voltage (input)	V_{REF} range		2.4	2.5	AVDD	V
		2 × V_{REF} range		2.4	2.5	AVDD / 2	V
I_{REF}	Average Reference input current	Per ADC			300		µA
C_{REF}	External ceramic reference capacitance				10		µF
$I_{lkg(dc)}$	DC leakage current				±0.1		µA

(1) Ideal input span, does not include gain or offset error.
(2) Refer to the *Reference* section for more details.

Electrical Characteristics: All Devices (continued)

All minimum and maximum specifications are at T_A = –40°C to 125°C, AVDD = 5 V, DVDD = 3.3 V, V_{REF_A} = V_{REF_B} = V_{REF} = 2.5 V, and f_{DATA} = maximum, unless otherwise noted.
Typical values are at T_A = 25°C, AVDD = 5 V, and DVDD = 3.3 V.

PARAMETER		TEST CONDITIONS		MIN	TYP	MAX	UNIT
SAMPLING DYNAMICS							
t_A	Aperture delay				8		ns
	t_A match	ADC_A to ADC_B			40		ps
t_{AJIT}	Aperture jitter				50		ps
DIGITAL INPUTS(3)							
V_{IH}	High-level input voltage	DVDD > 2.3 V		0.7 DVDD		DVDD + 0.3	V
		DVDD ≤ 2.3 V		0.8 DVDD		DVDD + 0.3	V
V_{IL}	Low-level input voltage	DVDD > 2.3 V		–0.3		0.3 DVDD	V
		DVDD ≤ 2.3 V		–0.3		0.2 DVDD	V
	Input current				±10		nA
DIGITAL OUTPUTS(3)							
V_{OH}	High-level output voltage	I_{OH} = 500-µA source		0.8 DVDD		DVDD	V
V_{OL}	Low-level output voltage	I_{OH} = 500-µA sink		0		0.2 DVDD	V
POWER SUPPLY							
AVDD	Analog supply voltage (AVDD to AGND)	$\pm V_{REF}$ range	Internal reference	4.5	5.0	5.5	V
			External reference: V_{EXT_REF} < 4.5 V	4.5	5.0	5.5	V
			External reference: V_{EXT_REF} > 4.5 V	V_{EXT_REF}	5.0	5.5	V
		$\pm 2 \times V_{REF}$ range	Internal reference	5.0	5.0	5.5	V
			External reference	$2 \times V_{REF_EXT}$	5.0	5.5	V
DVDD	Digital supply voltage (DVDD to AGND)			1.65		5.5	V
AIDD	Analog supply current	AVDD = 5 V, fastest throughput internal reference			8.5	10	mA
		AVDD = 5 V, fastest throughput external reference(4)			7.5		mA
		AVDD = 5 V, no conversion internal reference			5.5	7	mA
		AVDD = 5 V, no conversion external reference(4)			4.5		mA
		AVDD = 5 V, STANDBY mode Internal Reference			2.5		mA
		AVDD = 5 V, STANDBY mode external reference(4)			1		mA
		Power-down mode			10	50	µA
DIDD	Digital supply current	DVDD = 3.3 V, C_{LOAD} = 10 pF, fastest throughput			0.5		mA
		DVDD = 5 V, C_{LOAD} = 10 pF fastest throughput			1		mA
P_D	Power dissipation (normal operation)	AVDD = 5V, fastest throughput, internal reference			42.5	50	mW

(3) Specified by design; not production tested.
(4) With internal reference powered down, CFR.B6 = 0.

Copyright © 2013–2014, Texas Instruments Incorporated

7.9 Timing Requirements: Interface Mode(1)

PARAMETER		ASSOCIATED FIGURES
t_{CLK}	CLOCK period	Figure 1, Figure 91, Figure 92, Figure 93, Figure 94
t_{ACQ}	Acquisition time	Figure 91, Figure 92, Figure 93, Figure 94
t_{CONV}	Conversion time	Figure 91, Figure 92, Figure 93, Figure 94

(1) These parameters are specific to the interface mode of operation. Refer to the *Conversion Data Read* section for more details.

7.10 Timing Characteristics: Serial Interface

PARAMETER		TEST CONDITIONS		ASSOCIATED FIGURES	MIN	TYP	MAX	UNIT
TIMING REQUIREMENTS								
t_{PH_CK}	CLOCK high time			Figure 1	0.4		0.6	t_{CLK}
t_{PL_CK}	CLOCK low time				0.4		0.6	t_{CLK}
f_{CLK}	CLOCK frequency						1 / t_{CLK}	MHz
t_{PH_CS}	$\overline{CS}$ high time			Figure 1	40			ns
$t_{PH_CS_SHRT}$	$\overline{CS}$ high time after frame abort	ADS8353		Figure 99	150			ns
		ADS7853			100			ns
		ADS7253			70			ns
t_{SU_CSCK}	Setup time: $\overline{CS}$ falling edge to SCLK falling edge			Figure 1	15			ns
t_{D_CKCS}	Delay time: Last SCLK falling edge to $\overline{CS}$ rising edge				15			ns
t_{SU_CKDI}	Setup time: DIN data valid to SCLK falling edge				5			ns
t_{HT_CKDI}	Hold time: SCLK falling edge to (previous) data valid on DIN				5			ns
t_{PU_STDBY}	Power-up time from STANDBY mode			Figure 96	1			µs
t_{PU_SPD}	Power-up time from SPD mode	With internal reference		Figure 98	3			ms
		With external reference			1			ms
TIMING SPECIFICATIONS								
$t_{THROUGHPUT}$	Throughput time	ADS8353	32-CLK mode	Figure 91, Figure 92	1.666			µs
		ADS7853	32-CLK mode		1			µs
			16-CLK mode	Figure 93, Figure 94	1			µs
		ADS7253	32-CLK mode	Figure 91, Figure 92	1			µs
			16-CLK mode	Figure 93, Figure 94	1			µs
$f_{THROUGHPUT}$	Throughput			Figure 91, Figure 92, Figure 93, Figure 94			1 / $t_{THROUGHPUT}$	kSPS
t_{DV_CSDO}	Delay time: $\overline{CS}$ falling edge to data enable			Figure 1			12	ns
t_{DZ_CSDO}	Delay time: $\overline{CS}$ rising edge to data going to 3-state						12	ns
t_{D_CKDO}	Delay time: SCLK falling edge to next data valid						20	ns

Copyright © 2013–2014, Texas Instruments Incorporated

Figure 1 shows the details of the serial interface between the device and the digital host controller.

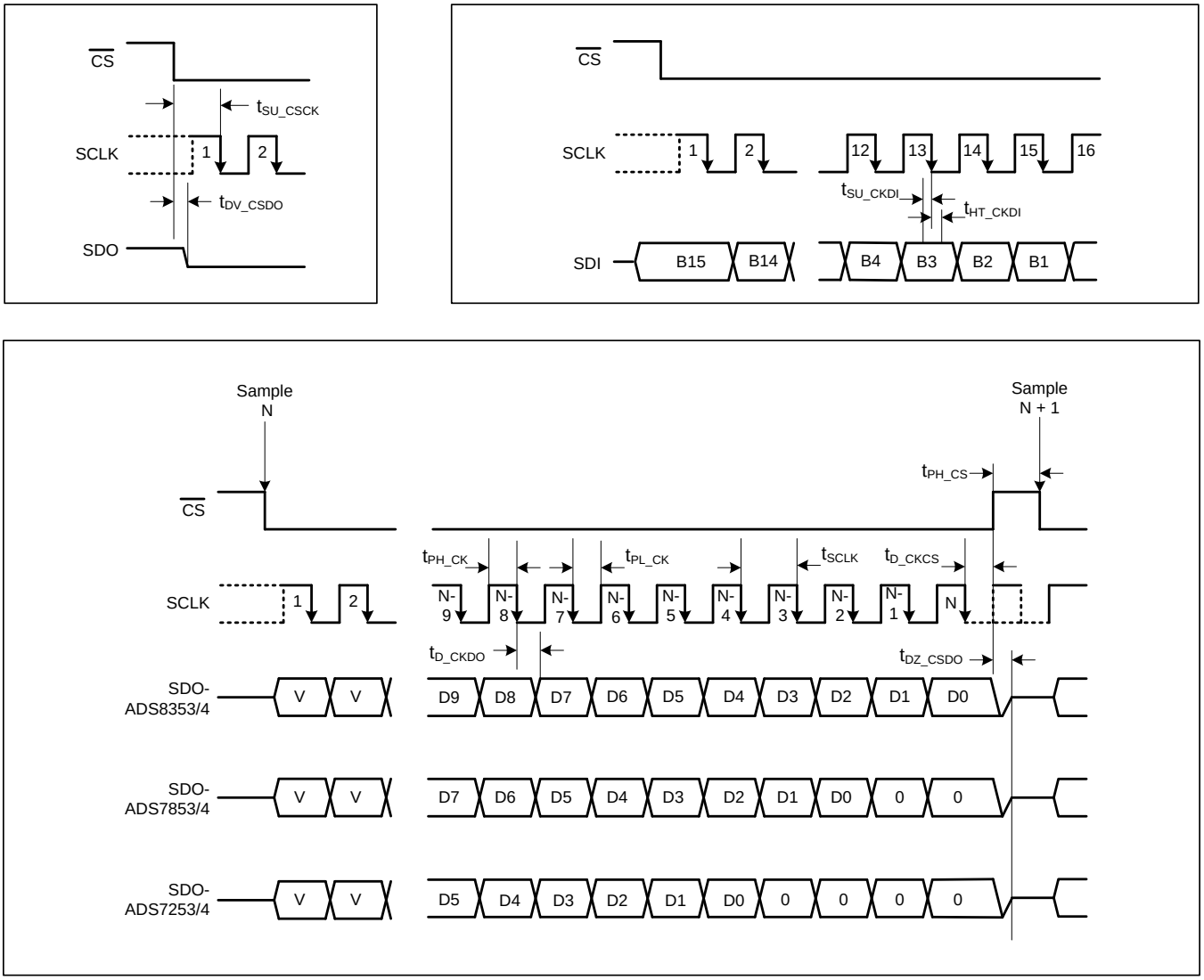

Figure 1. Serial Interface Timing Diagram

Copyright © 2013–2014, Texas Instruments Incorporated

7.11 Typical Characteristics: ADS8353

At T_A = 25°C, AVDD = 5 V, DVDD = 3.3 V, V_{REF} = 2.5 V (internal), and f_{DATA} = 600 kSPS, unless otherwise noted.

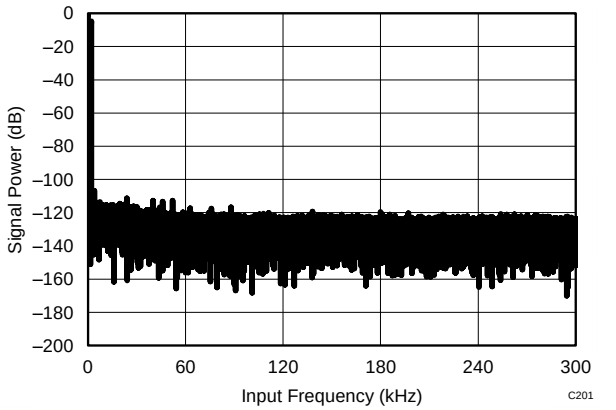

f_{IN} = 2 kHz SNR = 84.2 dB THD = -101.3 dB

Figure 2. Typical FFT

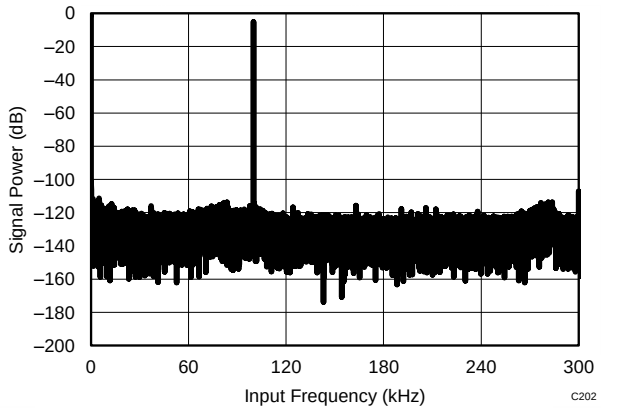

f_{IN} = 100 kHz SNR = 80.8 dB THD = -99.1 dB

Figure 3. Typical FFT

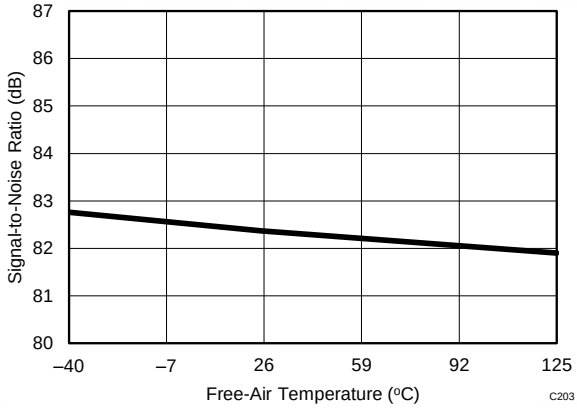

f_{IN} = 2 kHz

Figure 4. SNR vs Temperature

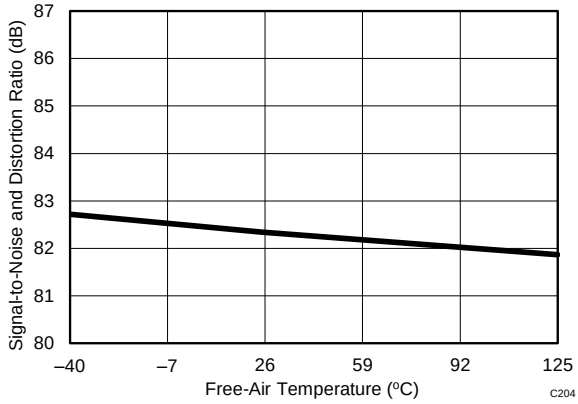

f_{IN} = 2 kHz

Figure 5. SINAD vs Temperature

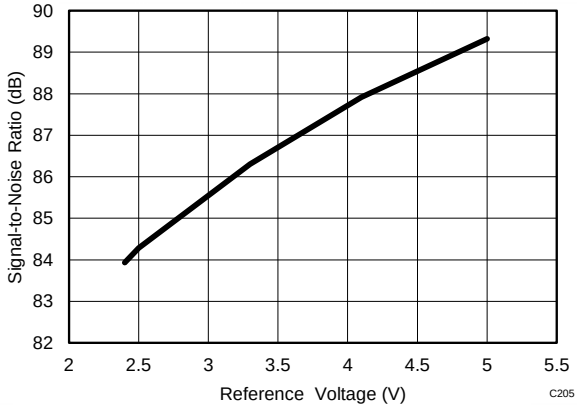

f_{IN} = 2 kHz

Figure 6. SNR vs Reference Voltage

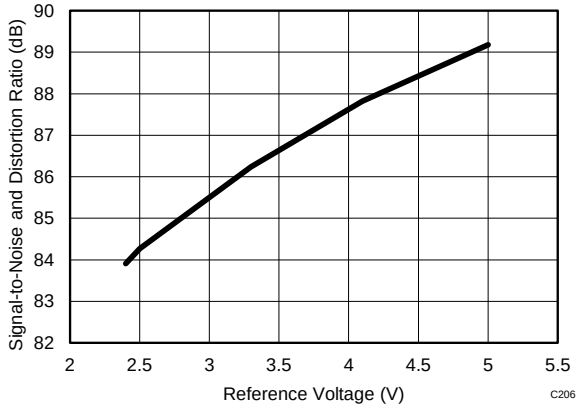

f_{IN} = 2 kHz

Figure 7. SINAD vs Reference Voltage

Typical Characteristics: ADS8353 (continued)

At T_A = 25°C, AVDD = 5 V, DVDD = 3.3 V, V_{REF} = 2.5 V (internal), and f_{DATA} = 600 kSPS, unless otherwise noted.

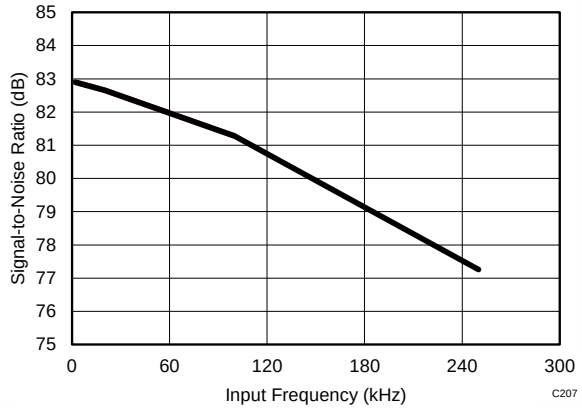

V_{REF} = 5 V

Figure 8. SNR vs Input Frequency

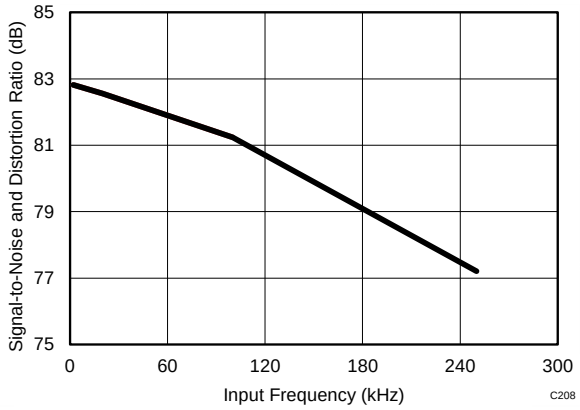

V_{REF} = 5 V

Figure 9. SINAD vs Input Frequency

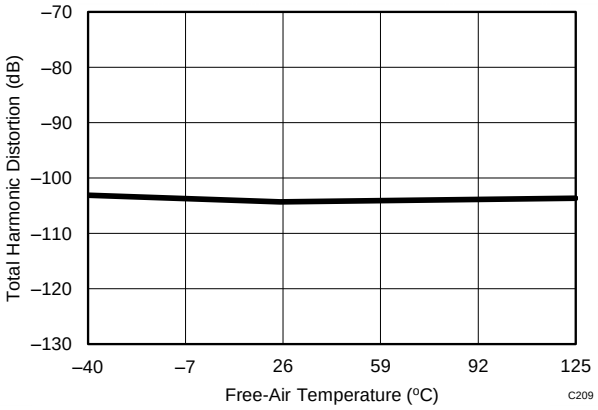

f_{IN} = 2 kHz

Figure 10. THD vs Temperature

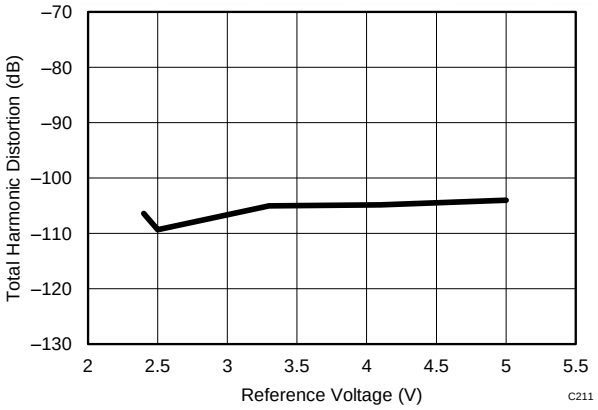

f_{IN} = 2 kHz

Figure 11. THD vs Reference Voltage

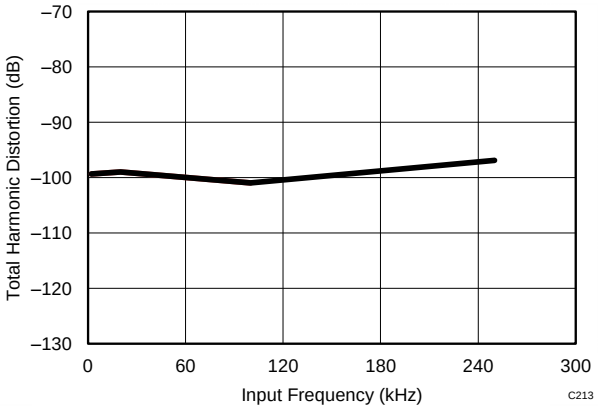

V_{REF} = 5 V

Figure 12. THD vs Input Frequency

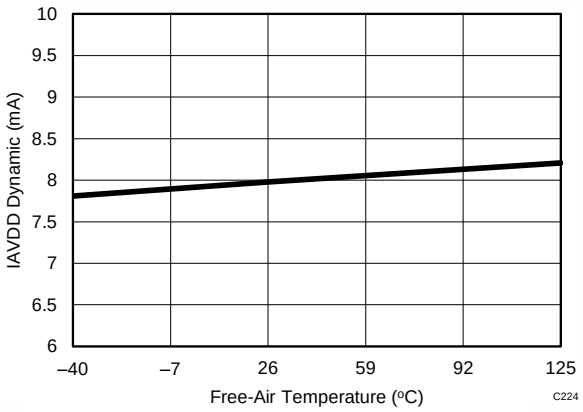

Figure 13. Analog Supply Current vs Temperature

Copyright © 2013–2014, Texas Instruments Incorporated

Typical Characteristics: ADS8353 (continued)

At T_A = 25°C, AVDD = 5 V, DVDD = 3.3 V, V_{REF} = 2.5 V (internal), and f_{DATA} = 600 kSPS, unless otherwise noted.

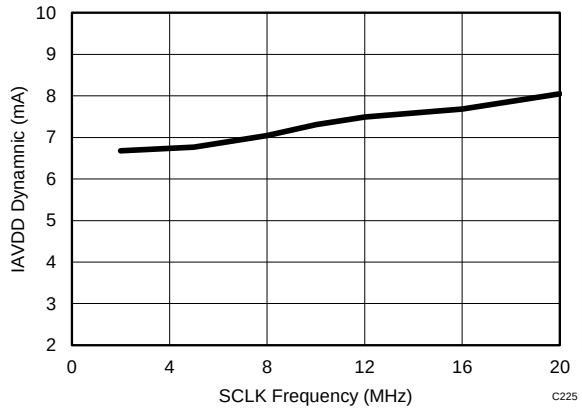

Figure 14. Analog Supply Current vs SCLK Frequency

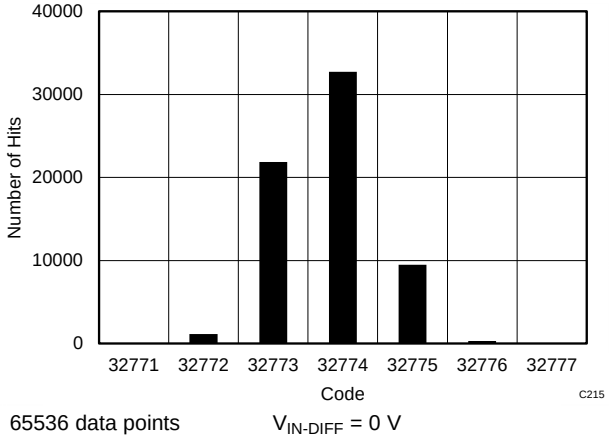

Figure 15. DC Histogram

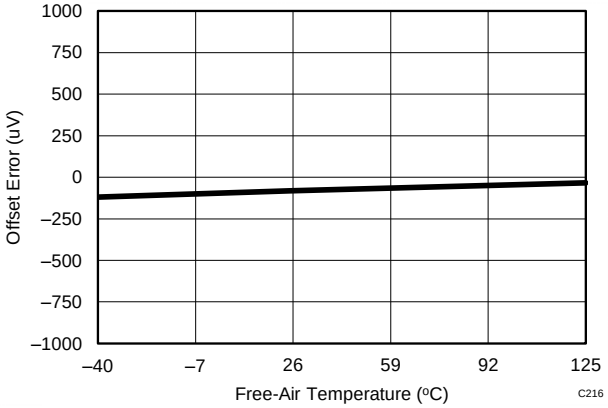

Figure 16. Offset Error vs Temperature

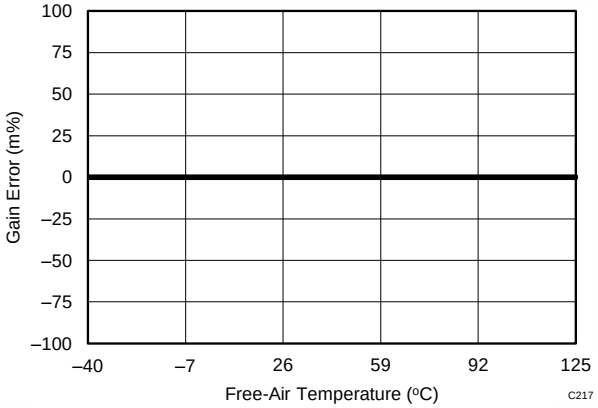

Figure 17. Gain Error vs Temperature

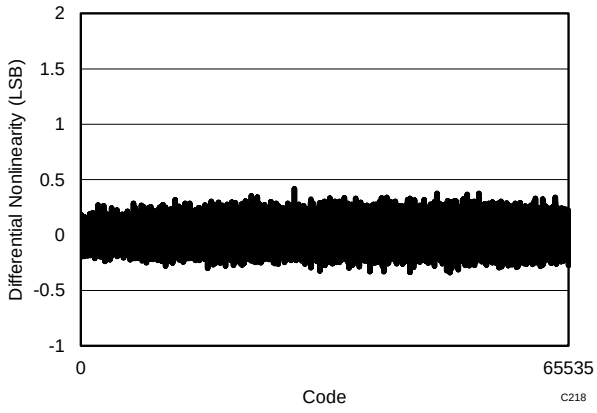

Figure 18. Typical DNL

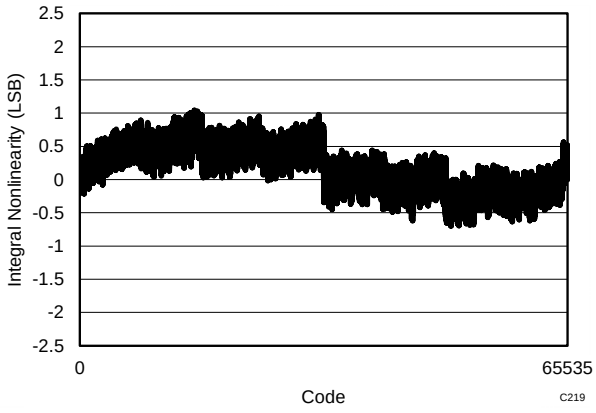

Figure 19. Typical INL

Typical Characteristics: ADS8353 (continued)

At T_A = 25°C, AVDD = 5 V, DVDD = 3.3 V, V_{REF} = 2.5 V (internal), and f_{DATA} = 600 kSPS, unless otherwise noted.

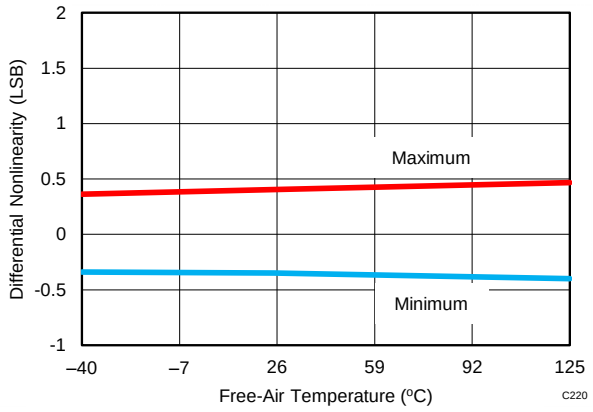

Figure 20. DNL vs Temperature

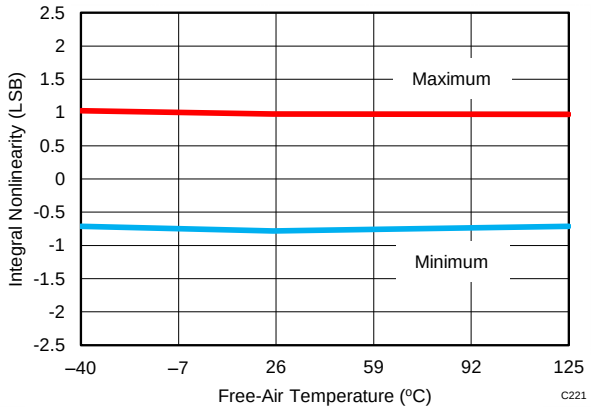

Figure 21. INL vs Temperature

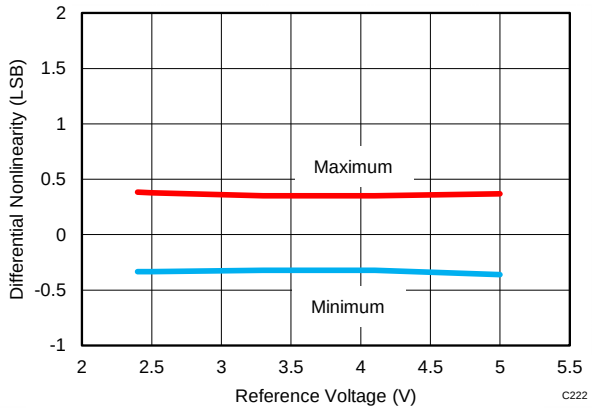

Figure 22. DNL vs Reference Voltage

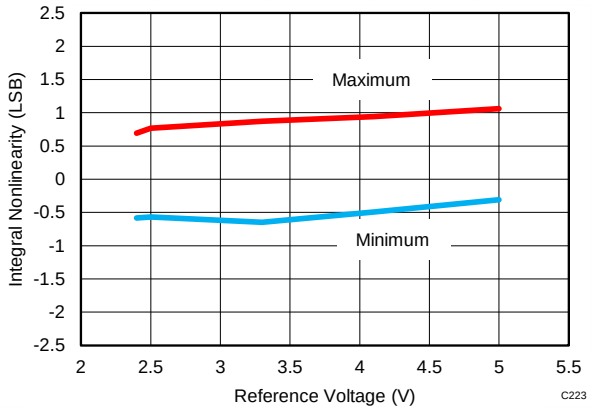

Figure 23. INL vs Reference Voltage

Copyright © 2013–2014, Texas Instruments Incorporated

7.12 Typical Characteristics: ADS7853

At T_A = 25°C, AVDD = 5 V, DVDD = 3.3 V, V_{REF} = 2.5 V (internal), and f_{DATA} = 1 MSPS, unless otherwise noted.

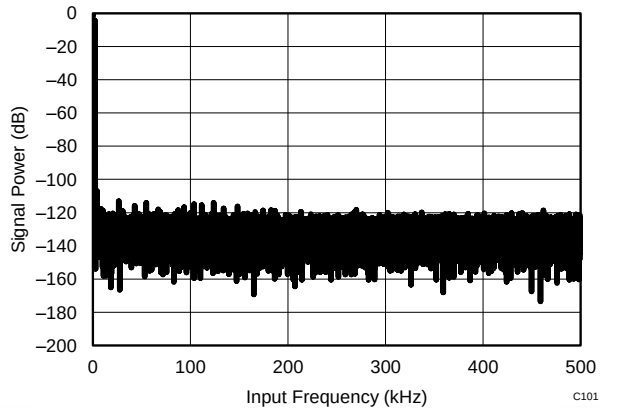

f_{IN} = 2 kHz SNR = 81.1 dB THD = –94.2 dB
16-CLK interface

Figure 24. Typical FFT

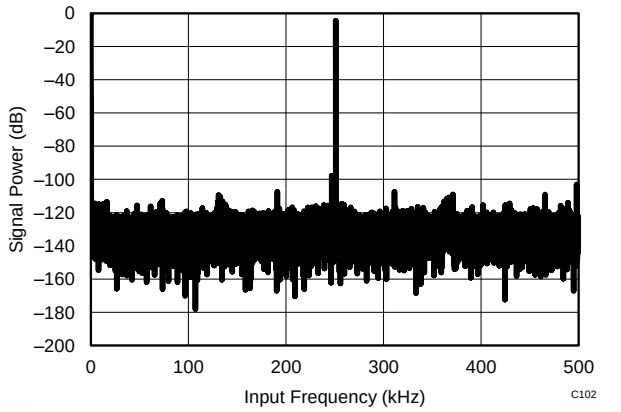

f_{IN} = 250 kHz SNR = 80.2 dB THD = –90.4 dB
16-CLK interface

Figure 25. Typical FFT

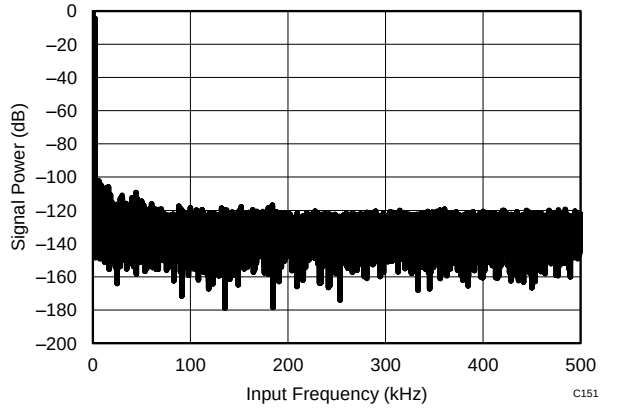

f_{IN} = 2 kHz SNR = 81.9 dB THD = –98.1 dB
32-CLK interface

Figure 26. Typical FFT

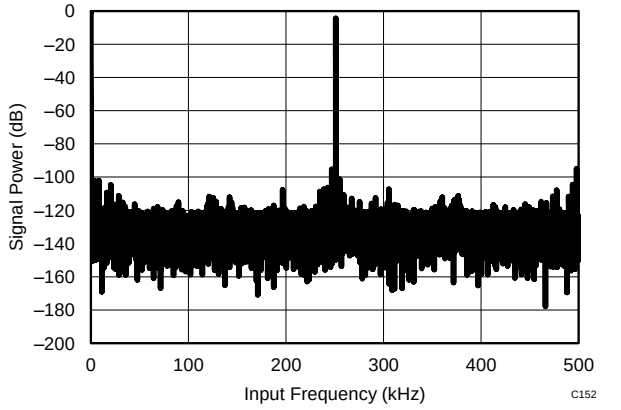

f_{IN} = 250 kHz SNR = 80.8 dB THD = –92.1 dB
32-CLK interface

Figure 27. Typical FFT

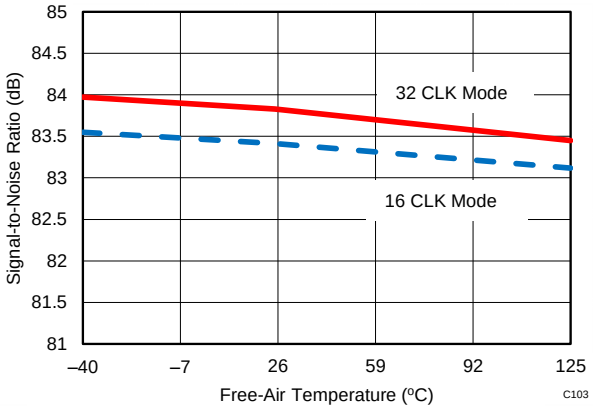

f_{IN} = 2 kHz

Figure 28. SNR vs Temperature

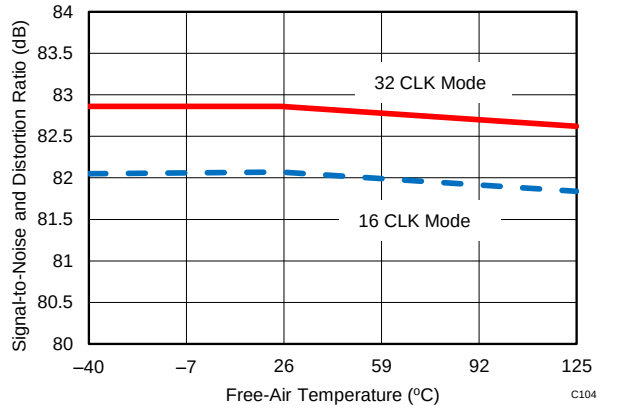

f_{IN} = 2 kHz

Figure 29. SINAD vs Temperature

Typical Characteristics: ADS7853 (continued)

At T_A = 25°C, AVDD = 5 V, DVDD = 3.3 V, V_{REF} = 2.5 V (internal), and f_{DATA} = 1 MSPS, unless otherwise noted.

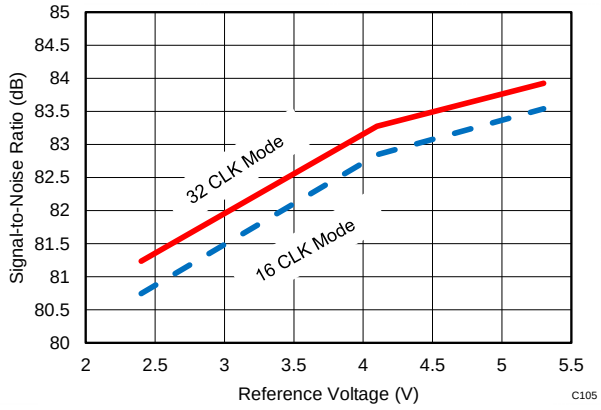

f_{IN} = 2 kHz

Figure 30. SNR vs Reference Voltage

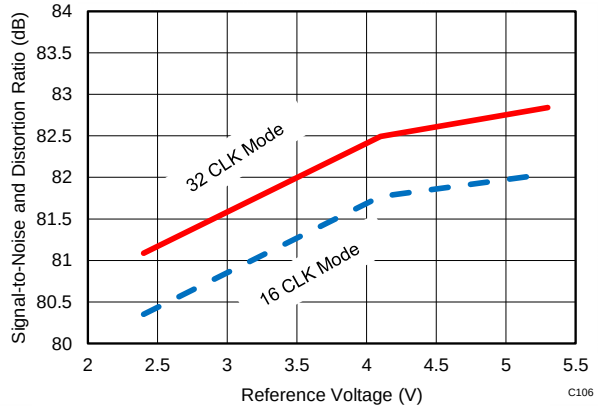

f_{IN} = 2 kHz

Figure 31. SINAD vs Reference Voltage

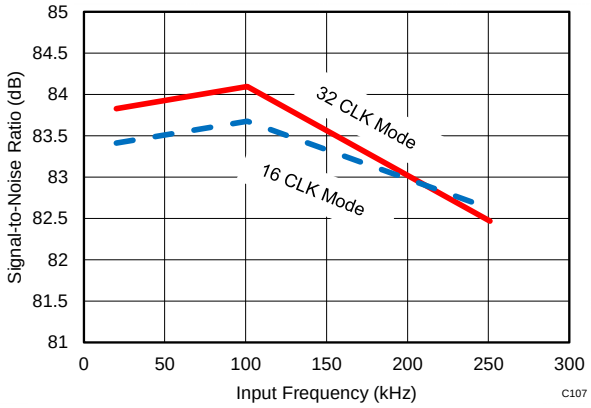

V_{REF} = 5 V

Figure 32. SNR vs Input Frequency

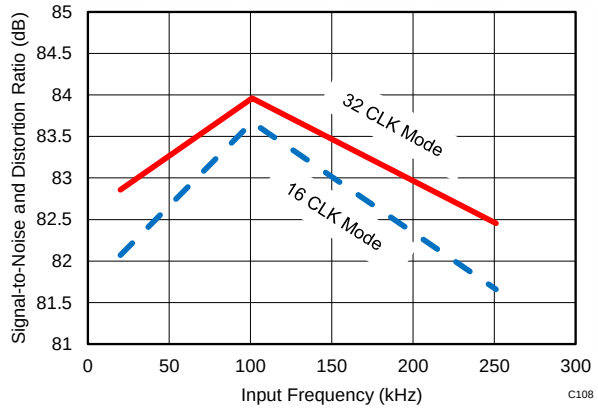

V_{REF} = 5 V

Figure 33. SINAD vs Input Frequency

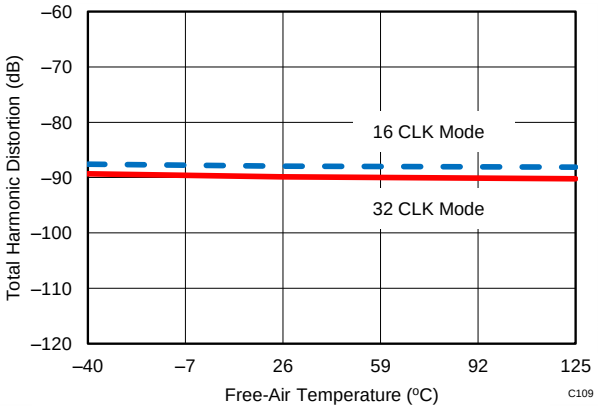

f_{IN} = 2 kHz

Figure 34. THD vs Temperature

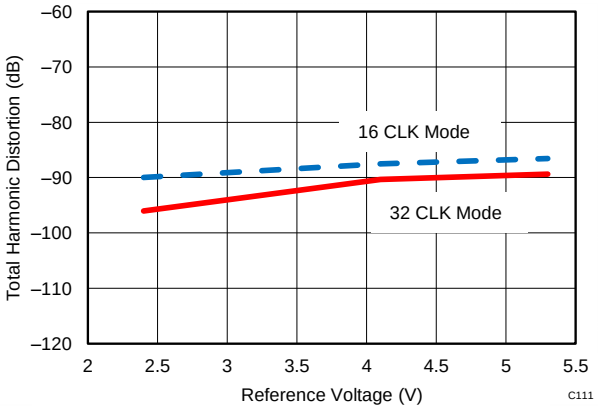

f_{IN} = 2 kHz

Figure 35. THD vs Reference Voltage

Copyright © 2013–2014, Texas Instruments Incorporated

Typical Characteristics: ADS7853 (continued)

At T_A = 25°C, AVDD = 5 V, DVDD = 3.3 V, V_{REF} = 2.5 V (internal), and f_{DATA} = 1 MSPS, unless otherwise noted.

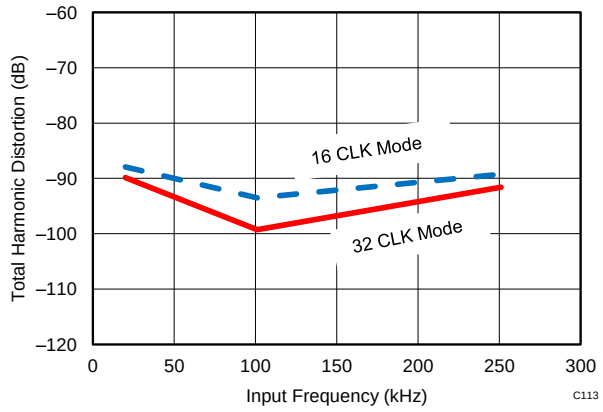

V_{REF} = 5 V

Figure 36. THD vs Input Frequency

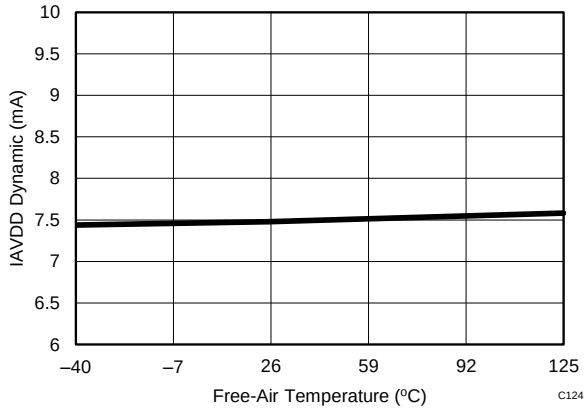

Figure 37. Analog Supply Current vs Temperature

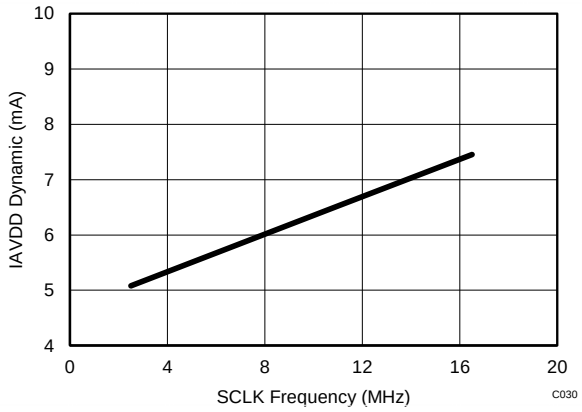

16-CLK interface

Figure 38. Analog Supply Current vs SCLK Frequency

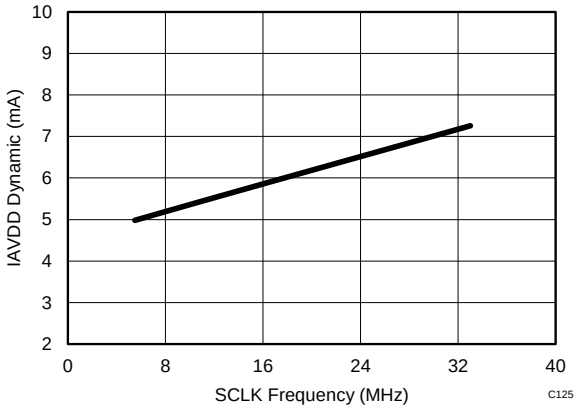

32-CLK interface

Figure 39. Analog Supply Current vs SCLK Frequency

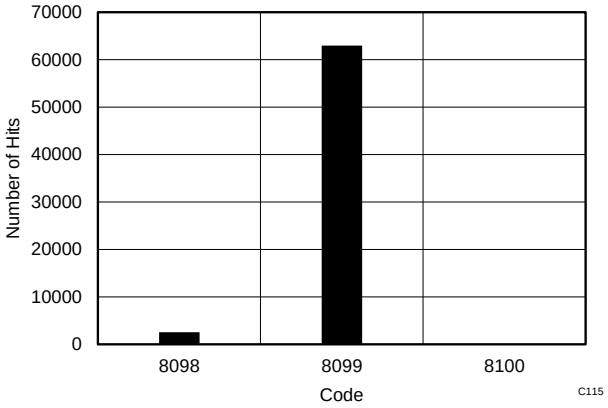

16-CLK interface 65536 data points $V_{IN-DIFF}$ = 0 V

Figure 40. DC Histogram

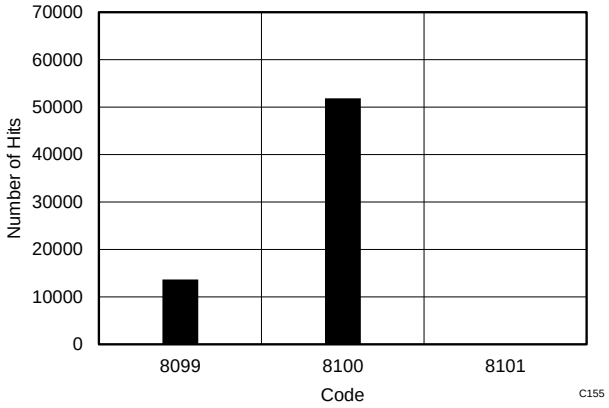

32-CLK interface 65536 data points $V_{IN-DIFF}$ = 0 V

Figure 41. DC Histogram

Typical Characteristics: ADS7853 (continued)

At T_A = 25°C, AVDD = 5 V, DVDD = 3.3 V, V_{REF} = 2.5 V (internal), and f_{DATA} = 1 MSPS, unless otherwise noted.

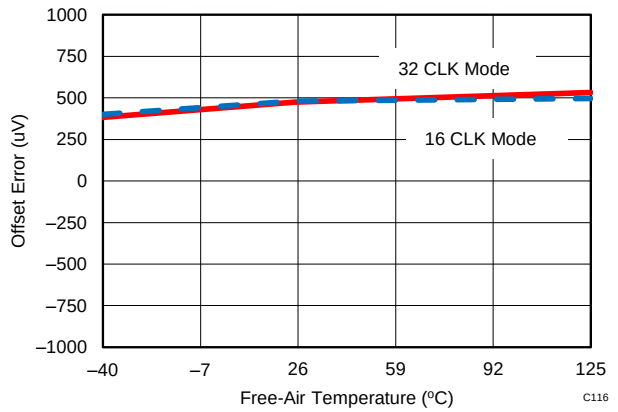

Figure 42. Offset Error vs Temperature

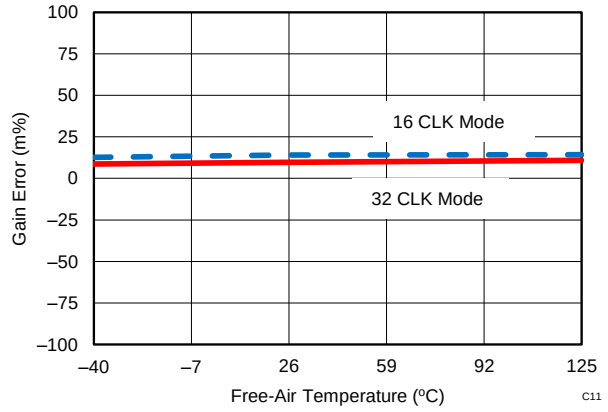

Figure 43. Gain Error vs Temperature

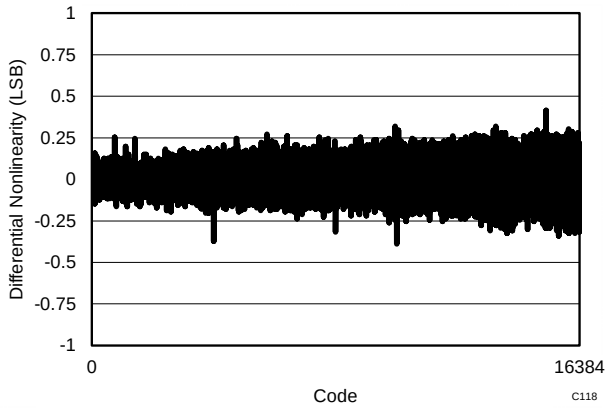

16-CLK interface

Figure 44. Typical DNL

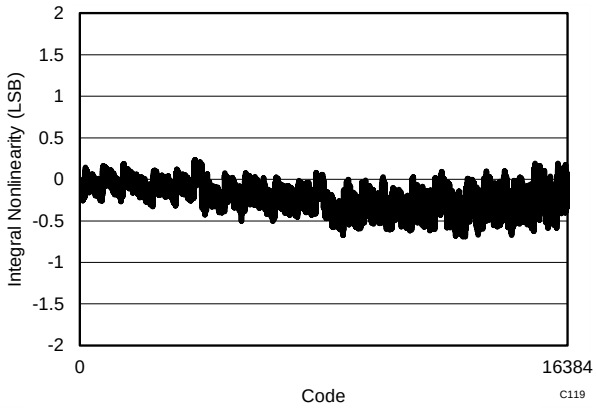

16-CLK interface

Figure 45. Typical INL

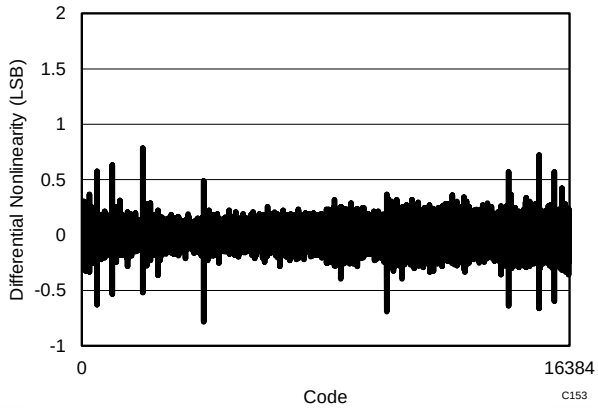

32-CLK interface

Figure 46. Typical DNL

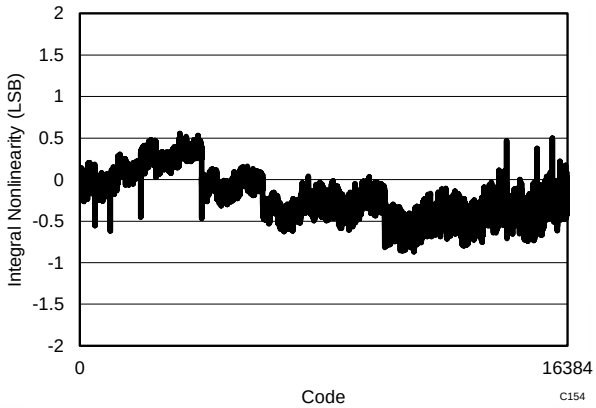

32-CLK interface

Figure 47. Typical INL

Copyright © 2013–2014, Texas Instruments Incorporated

Typical Characteristics: ADS7853 (continued)

At T_A = 25°C, AVDD = 5 V, DVDD = 3.3 V, V_{REF} = 2.5 V (internal), and f_{DATA} = 1 MSPS, unless otherwise noted.

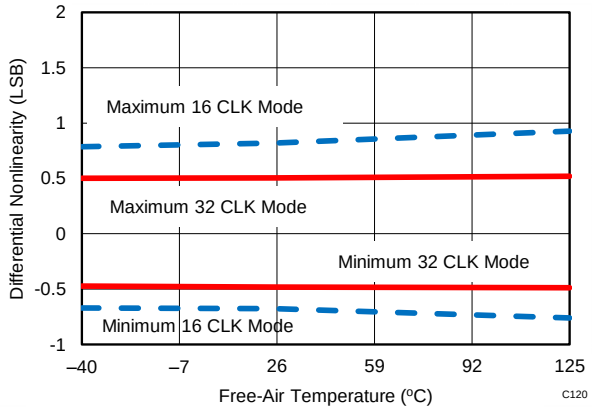

Figure 48. DNL vs Temperature

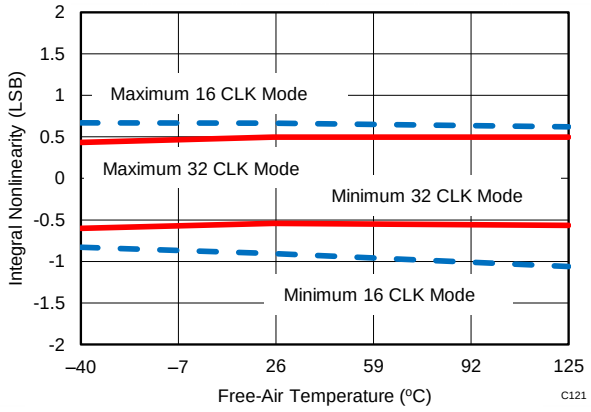

Figure 49. INL vs Temperature

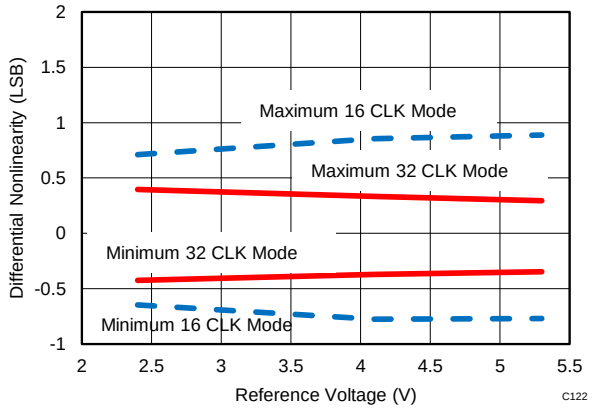

Figure 50. DNL vs Reference Voltage

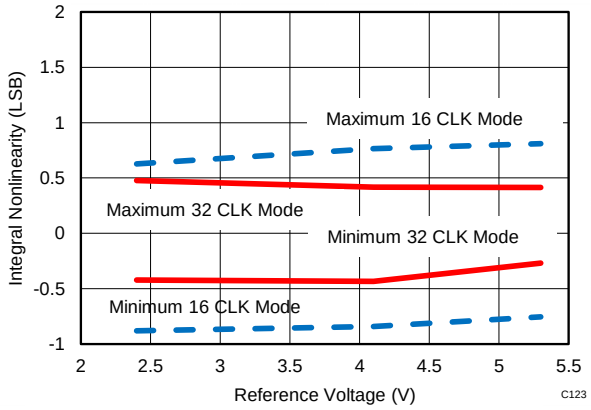

Figure 51. INL vs Reference Voltage

7.13 Typical Characteristics: ADS7253

At T_A = 25°C, AVDD = 5 V, DVDD = 3.3 V, V_{REF} = 2.5 V (internal), and f_{DATA} = 1 MSPS, unless otherwise noted.

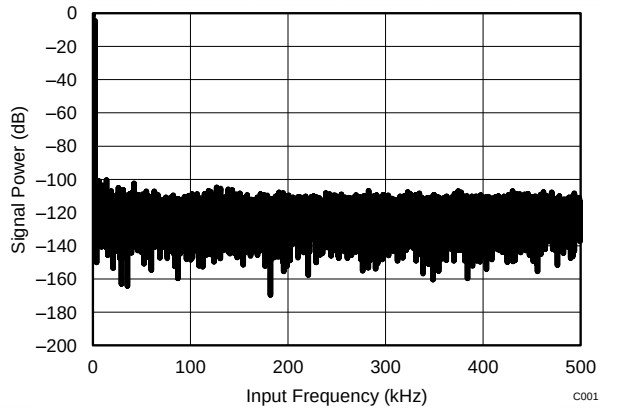

f_{IN} = 2 kHz SNR = 73.2 dB THD = –90.5 dB
16-CLK interface

Figure 52. Typical FFT

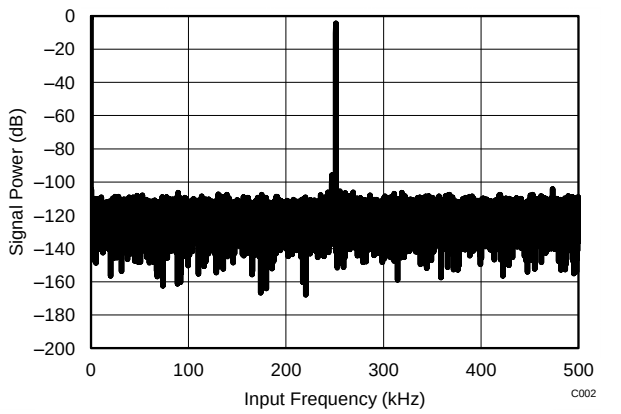

f_{IN} = 250 kHz SNR = 73.1 dB THD = –90.1 dB
16-CLK interface

Figure 53. Typical FFT

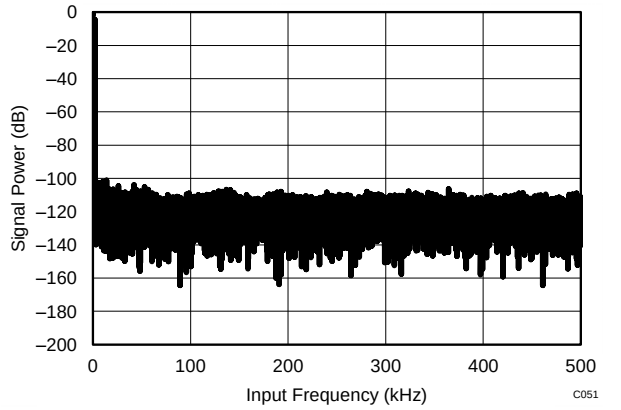

f_{IN} = 2 kHz SNR = 73.6 dB THD = –91.6 dB
32-CLK interface

Figure 54. Typical FFT

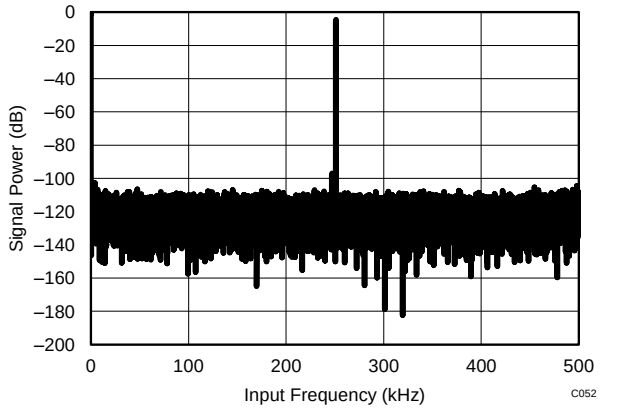

f_{IN} = 250 kHz SNR = 73.4 dB THD = –90.6 dB
32-CLK interface

Figure 55. Typical FFT

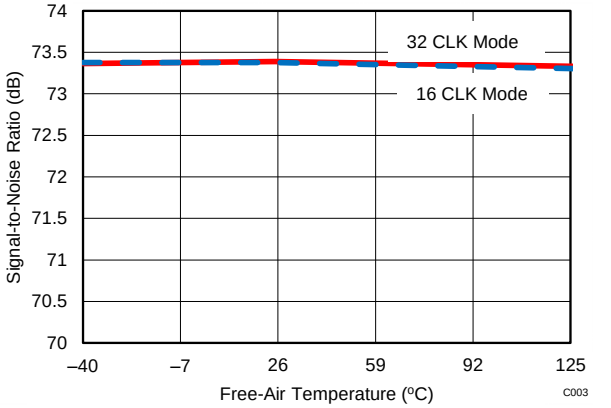

f_{IN} = 2 kHz

Figure 56. SNR vs Temperature

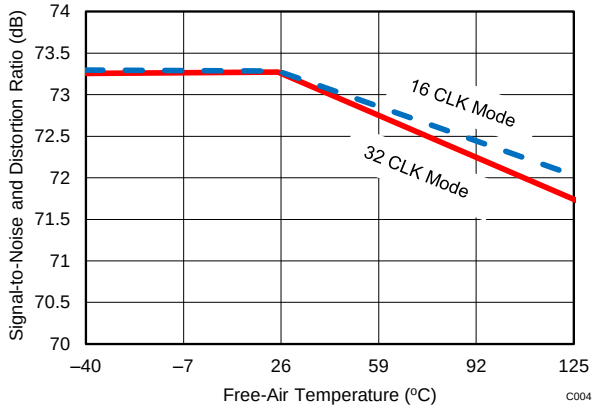

f_{IN} = 2 kHz

Figure 57. SINAD vs Temperature

Copyright © 2013–2014, Texas Instruments Incorporated

Typical Characteristics: ADS7253 (continued)

At T_A = 25°C, AVDD = 5 V, DVDD = 3.3 V, V_{REF} = 2.5 V (internal), and f_{DATA} = 1 MSPS, unless otherwise noted.

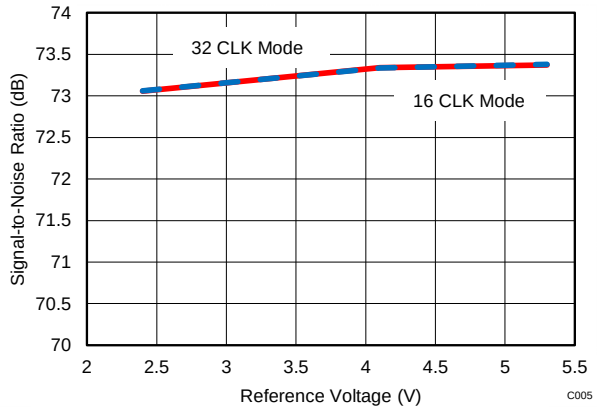

f_{IN} = 2 kHz

Figure 58. SNR vs Reference Voltage

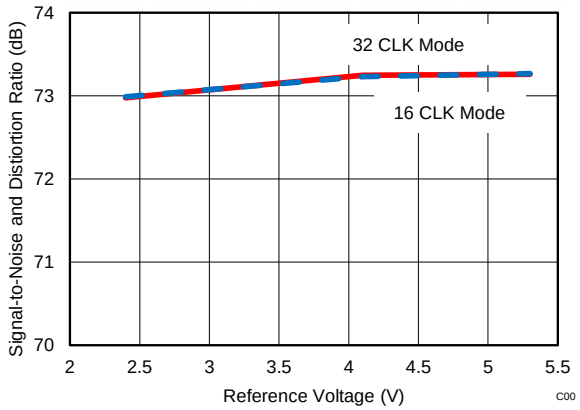

f_{IN} = 2 kHz

Figure 59. SINAD vs Reference Voltage

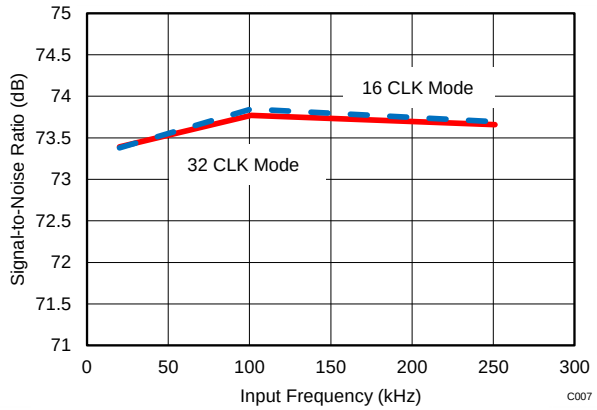

V_{REF} = 5 V

Figure 60. SNR vs Input Frequency

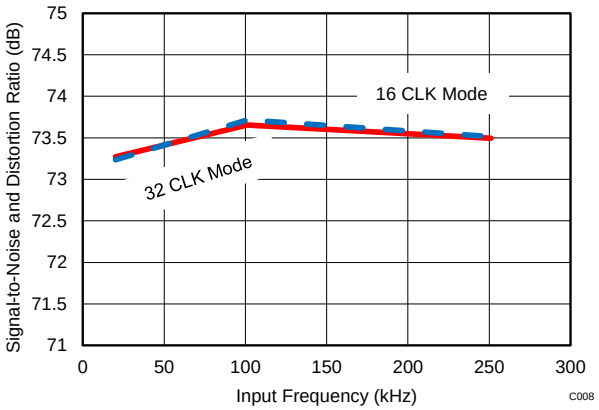

V_{REF} = 5 V

Figure 61. SINAD vs Input Frequency

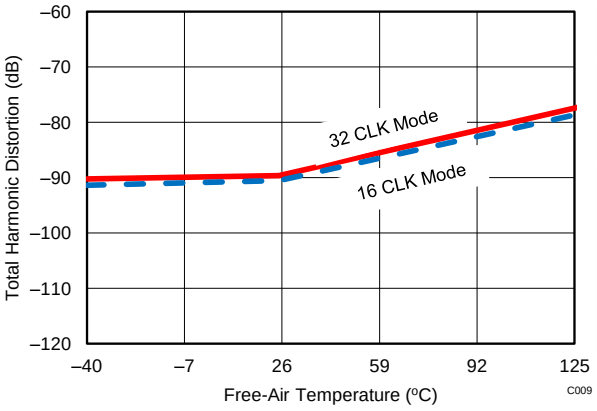

f_{IN} = 2 kHz

Figure 62. THD vs Temperature

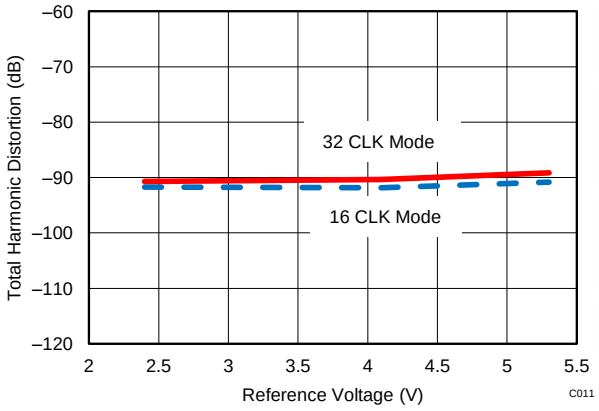

f_{IN} = 2 kHz

Figure 63. THD vs Reference Voltage

Typical Characteristics: ADS7253 (continued)

At T_A = 25°C, AVDD = 5 V, DVDD = 3.3 V, V_{REF} = 2.5 V (internal), and f_{DATA} = 1 MSPS, unless otherwise noted.

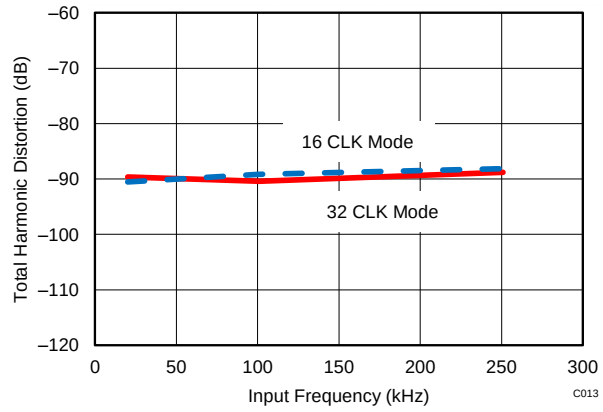

V_{REF} = 5 V

Figure 64. THD vs Input Frequency

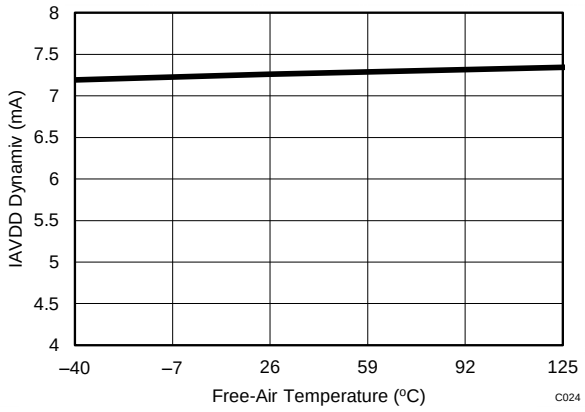

Figure 65. Analog Supply Current vs Temperature

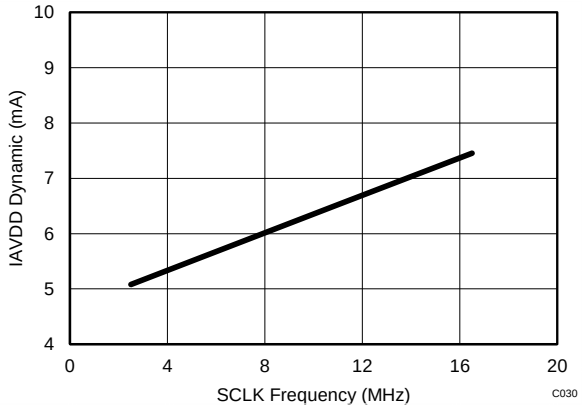

16-CLK interface

Figure 66. Analog Supply Current vs SCLK Frequency

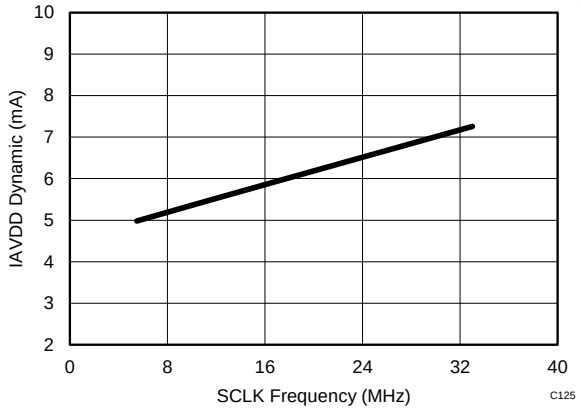

32-CLK interface

Figure 67. Analog Supply Current vs SCLK Frequency

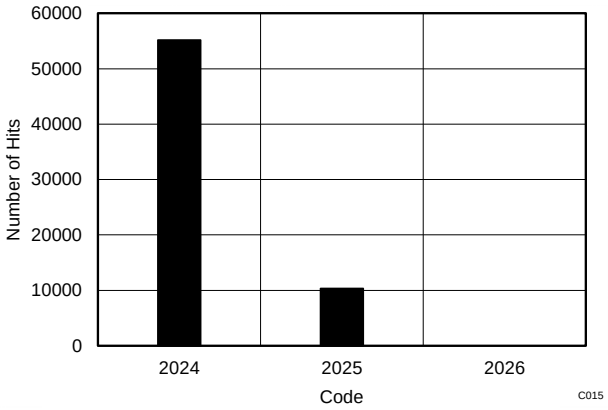

16-CLK interface 65536 data points $V_{IN-DIFF}$ = 0 V

Figure 68. DC Histogram

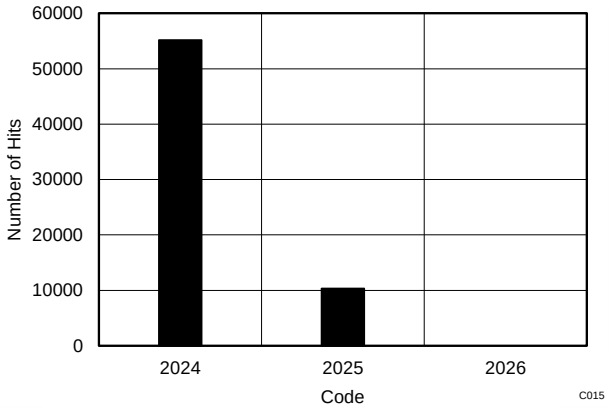

32-CLK interface 65536 data points $V_{IN-DIFF}$ = 0 V

Figure 69. DC Histogram

Copyright © 2013–2014, Texas Instruments Incorporated

Typical Characteristics: ADS7253 (continued)

At T_A = 25°C, AVDD = 5 V, DVDD = 3.3 V, V_{REF} = 2.5 V (internal), and f_{DATA} = 1 MSPS, unless otherwise noted.

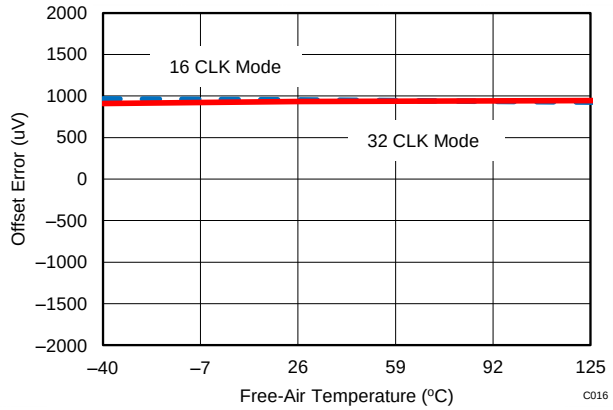

Figure 70. Offset Error vs Temperature

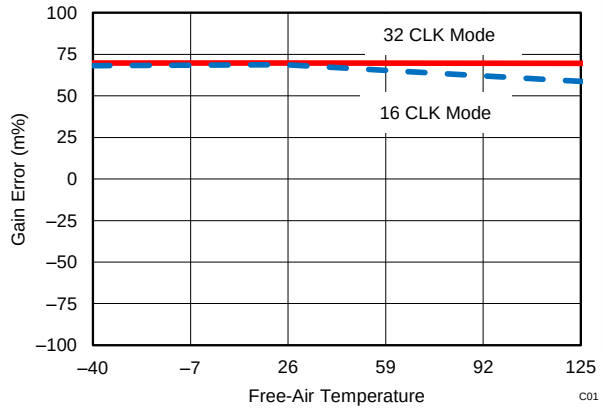

Figure 71. Gain Error vs Temperature

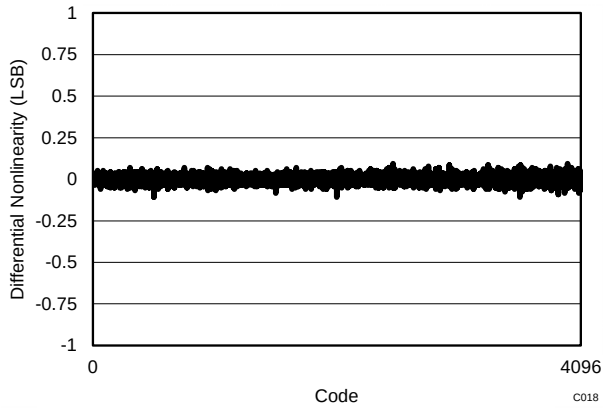

16-CLK interface

Figure 72. Typical DNL

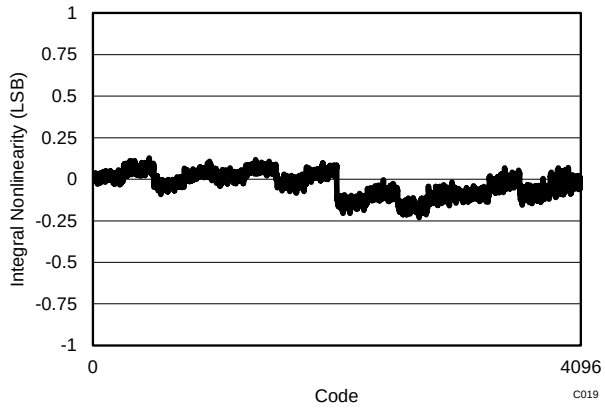

16-CLK interface

Figure 73. Typical INL

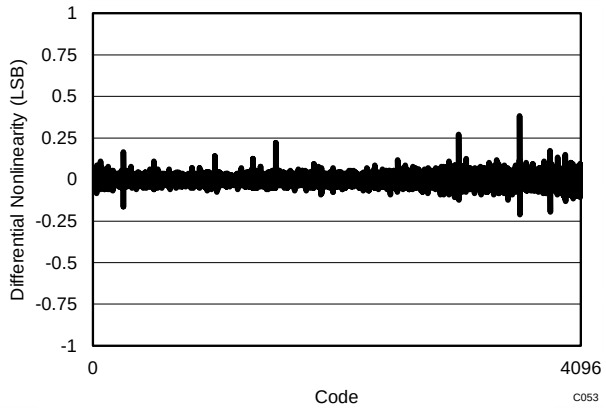

32-CLK interface

Figure 74. Typical DNL

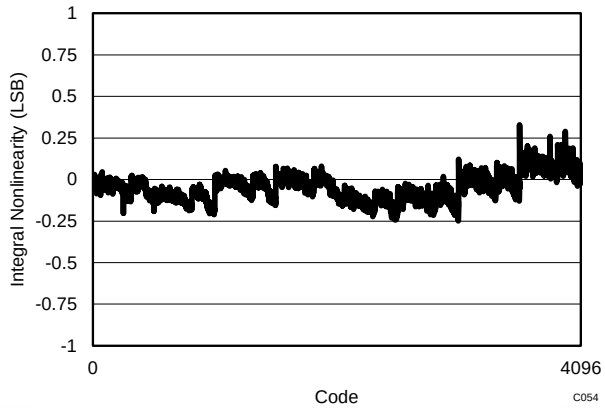

32-CLK interface

Figure 75. Typical INL

Typical Characteristics: ADS7253 (continued)

At T_A = 25°C, AVDD = 5 V, DVDD = 3.3 V, V_{REF} = 2.5 V (internal), and f_{DATA} = 1 MSPS, unless otherwise noted.

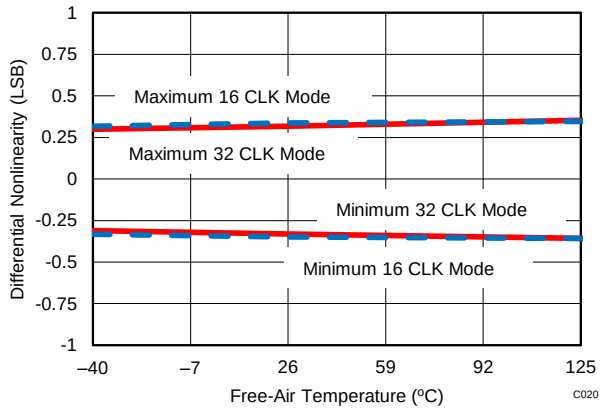

Figure 76. DNL vs Temperature

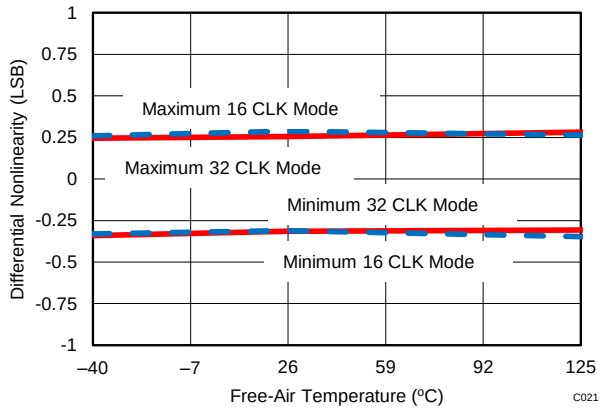

Figure 77. DNL vs Temperature

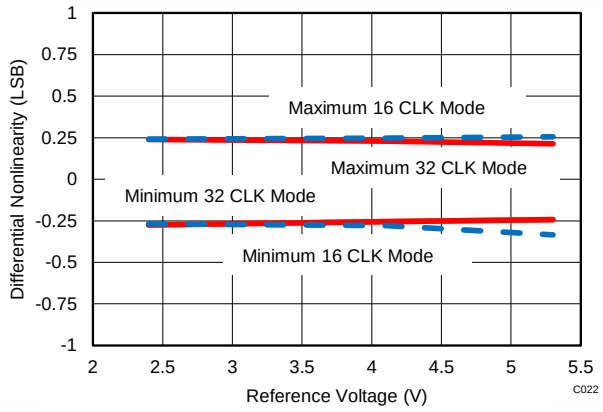

Figure 78. DNL vs Reference Voltage

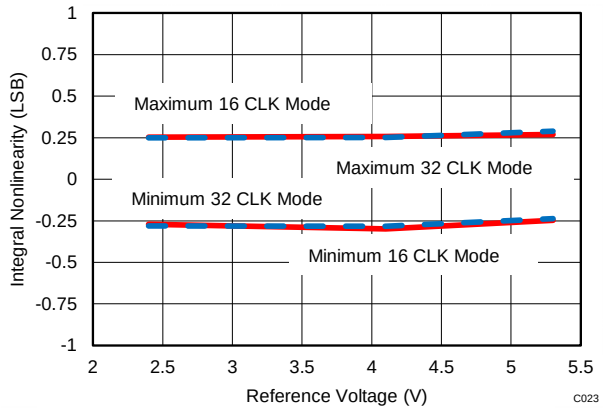

Figure 79. INL vs Reference Voltage

Copyright © 2013–2014, Texas Instruments Incorporated

7.14 Typical Characteristics: Common to ADS8353, ADS7853, and ADS7253

At T_A = 25°C, AVDD = 5 V, DVDD = 3.3 V, V_{REF} = 2.5 V (internal), and f_{DATA} = maximum, unless otherwise noted.

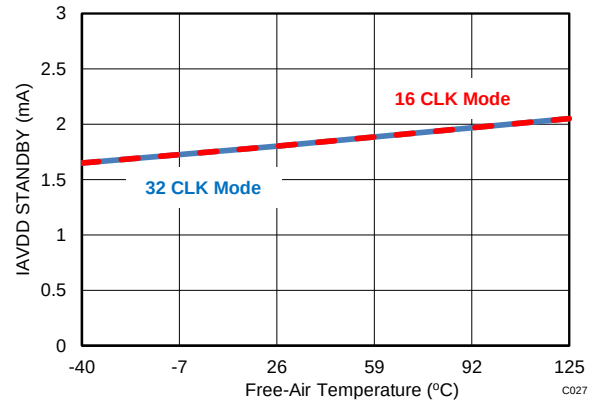

Figure 80. STANDBY Current vs Temperature

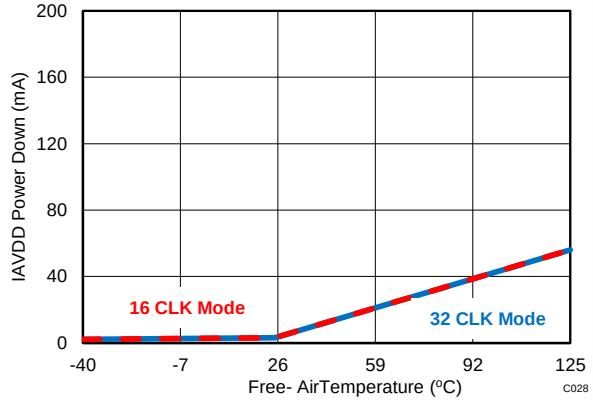

Figure 81. Power-Down Current vs Temperature

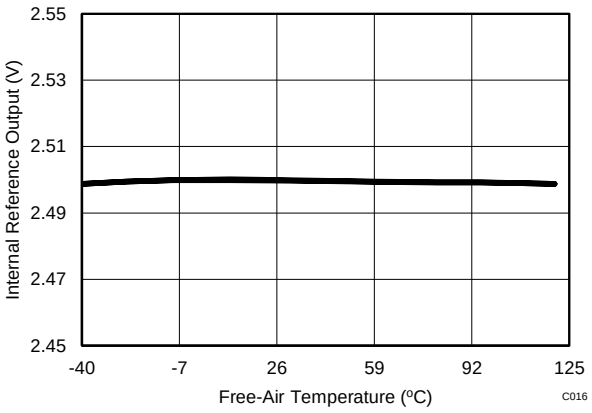

Figure 82. Internal Reference Output vs Temperature

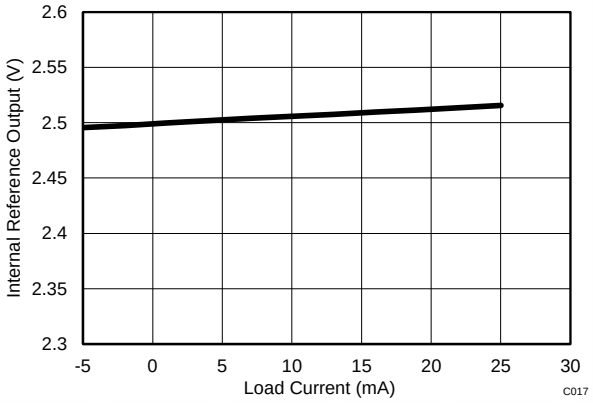

R_{OUT} = 0.67 Ω

Figure 83. Internal Reference Output Impedance

8 Detailed Description

8.1 Overview

These devices belong to a family of pin-compatible, dual, high-speed, simultaneous-sampling, analog-to-digital converters (ADCs). The ADS8353, ADS7853, and ADS7253 support single-ended and pseudo-differential input signals. The devices provide a simple, serial interface to the host controller and operate over a wide range of analog and digital power supplies.

These devices have two independently programmable internal references to achieve system-level gain error correction. The *Functional Block Diagram* section provides a functional block diagram of the device.

8.2 Functional Block Diagram

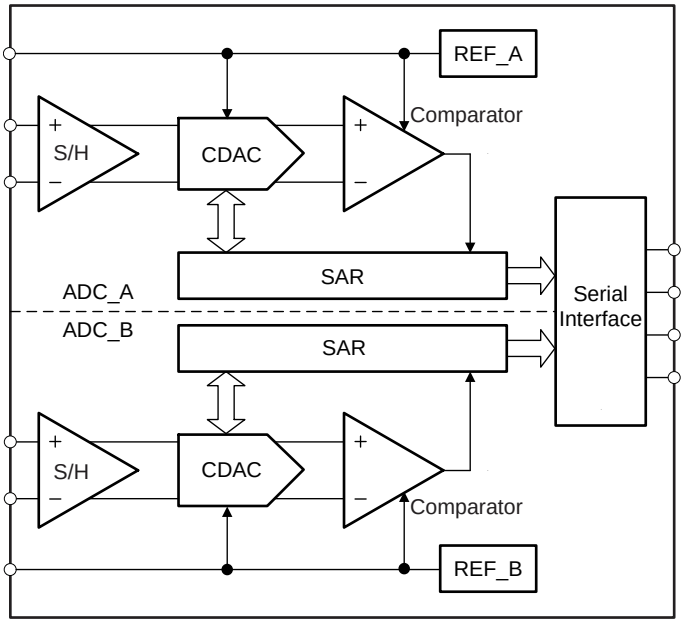

Copyright © 2013–2014, Texas Instruments Incorporated

8.3 Feature Description

8.3.1 Reference

The device has two simultaneous sampling ADCs (ADC_A and ADC_B). ADC_A and ADC_B operate with reference voltages V_{REF_A} and V_{REF_B} present on the REFIO_A and REFIO_B pins, respectively. The REFIO_A and REFIO_B pins should be decoupled with the REFGND_A and REFGND_B pins, respectively, with 10-µF decoupling capacitors.

The device supports operation either with an internal or external reference source, as shown in Figure 84. The reference voltage source is determined by setting bit 6 of the configuration register (CFR.B6). Note that this bit is common to ADC_A and ADC_B.

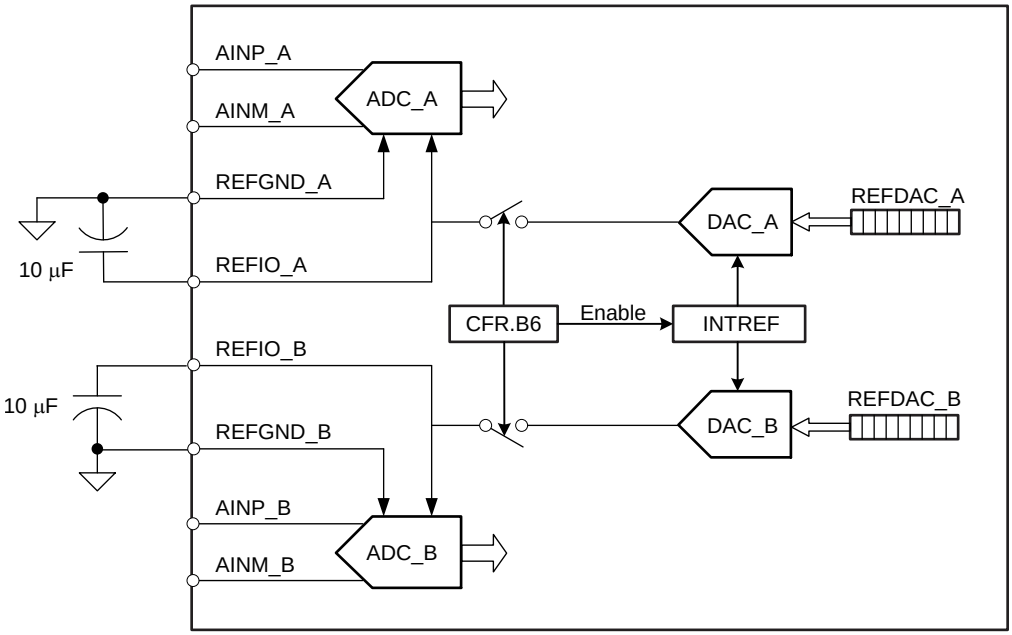

Figure 84. Reference Configurations and Connections

When CFR.B6 is 0, the device shuts down the internal reference source (INTREF) and ADC_A and ADC_B operate on external reference voltages provided by the user on the REFIO_A and REFIO_B pins, respectively.

When CFR.B6 is 1, the device operates with the internal reference source (INTREF) connected to REFIO_A and REFIO_B via DAC_A and DAC_B, respectively. In this configuration, V_{REF_A} and V_{REF_B} can be changed independently by writing to the respective user-programmable registers, REFDAC_A and REFDAC_B, respectively. Refer to the *REFDAC Registers (REFDAC_A and REFDAC_B)* section for more details.

Feature Description (continued)

8.3.2 Analog Inputs

The ADS8353, ADS7853, and ADS7253 support single-ended or pseudo-differential analog inputs on both ADC channels. These inputs are sampled and converted simultaneously by the two ADCs, ADC_A and ADC_B. ADC_A samples and converts ($V_{AINP_A} – V_{AINM_A}$), and ADC_B samples and converts ($V_{AINP_B} – V_{AINM_B}$).

Figure 85a and Figure 85b show equivalent circuits for the ADC_A and ADC_B analog input pins, respectively. Series resistance, R_S, represents the on-state sampling switch resistance (typically 50 Ω) and C_{SAMPLE} is the device sampling capacitor (typically 40 pF).

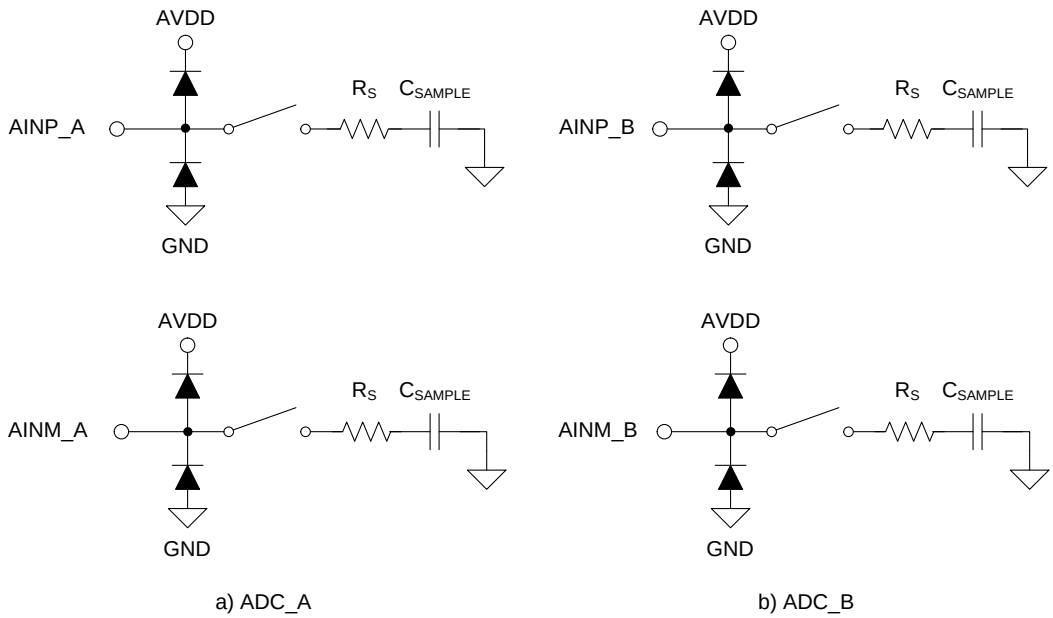

Figure 85. Equivalent Circuit for the Analog Input Pins

8.3.2.1 Analog Input: Full-Scale Range Selection

The full-scale range (FSR) supported at the analog inputs of the device is programmable with bit B9 of the configuration register (CFR.B9). This bit is common for both ADCs (ADC_A and ADC_B). The FSR is given by Equation 1 and Equation 2 :

For CFR.B9 = 0, FSR_ADC_A = 0 to V_{REF_A} and FSR_ADC_B = 0 to V_{REF_B} (1)

For CFR.B9 = 1, FSR_ADC_A = 0 to 2 × V_{REF_A} and FSR_ADC_B = 0 to 2 × V_{REF_B}

where:

- V_{REF_A} and V_{REF_B} are the reference voltages going to ADC_A and ADC_B, respectively (as described in the *Reference* section). (2)

Therefore, with appropriate settings of the REFDAC_A and REFDAC_B registers, CFR.B7, and CFR.B9, the maximum dynamic range of the ADC can be used.

Note that while using CFR.B9 set to 1, care must be taken so that the ADC analog supply (AVDD) is as in Equation 3 and Equation 4:

$2 \times V_{REF_A} \leq AVDD \leq AVDD(max)$ (3)

$2 \times V_{REF_B} \leq AVDD \leq AVDD(max)$ (4)

Copyright © 2013–2014, Texas Instruments Incorporated

Feature Description (continued)

8.3.2.2 Analog Input: Single-Ended and Pseudo-Differential Configurations

The ADS8353, ADS7853, and ADS7253 can support single-ended or pseudo-differential input configurations.

For supporting single-ended inputs, B7 in the configuration register (CFR.B7) must be set to 0 (CFR.B7 = 0) and AINM_A and AINM_B must be externally connected to GND.

For supporting pseudo-differential inputs, CFR.B7 must be set to 1 (CFR.B7 = 1) and AINM_A and AINM_B must be externally connected to FSR_ADC_A / 2 and FSR_ADC_B / 2, respectively. Note that CFR.B7 is common to both ADCs.

The CFR.B9 and CFR.B7 settings can be combined to select the desired input configuration, as shown in Table 1.

Table 1. Input Configurations

INPUT RANGE SELECTION	AINM SELECTION	CONNECTION DIAGRAM
CFR.B9 = 0 (FSR_ADC_A = 0 to V_{REF_A}) (FSR_ADC_B = 0 to V_{REF_B})	CFR.B7 = 0 (AINM_A = GND) (AINM_B = GND)	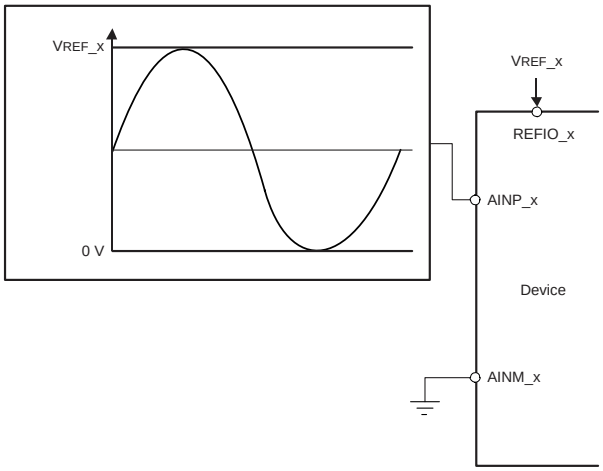
CFR.B9 = 1 (FSR_ADC_A = 0 to 2 x V_{REF_A}) (FSR_ADC_B = 0 to 2 x V_{REF_B})	CFR.B7 = 0 (AINM_A = GND) (AINM_B = GND)	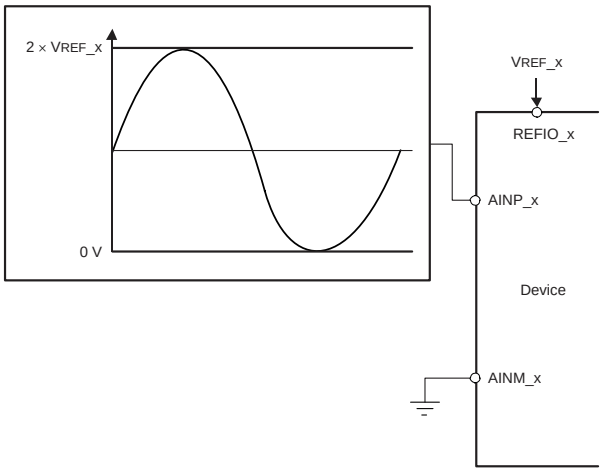

Feature Description (continued)

Table 1. Input Configurations (continued)

INPUT RANGE SELECTION	AINM SELECTION	CONNECTION DIAGRAM
CFR.B9 = 0 (FSR_ADC_A = V_{REF_A}) (FSR_ADC_B = V_{REF_B})	CFR.B7 = 1 (AINM_A = $V_{REF_A}/2$) (AINM_B = $V_{REF_B}/2$)	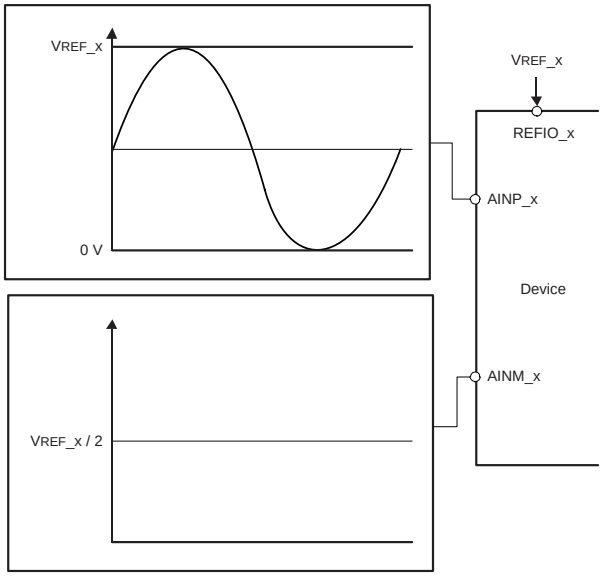
CFR.B9 = 1 (FSR_ADC_A = 2 x V_{REF_A}) (FSR_ADC_B = 2 x V_{REF_B})	CFR.B7 = 1 (AINM_A = V_{REF_A}) (AINM_B = V_{REF_B})	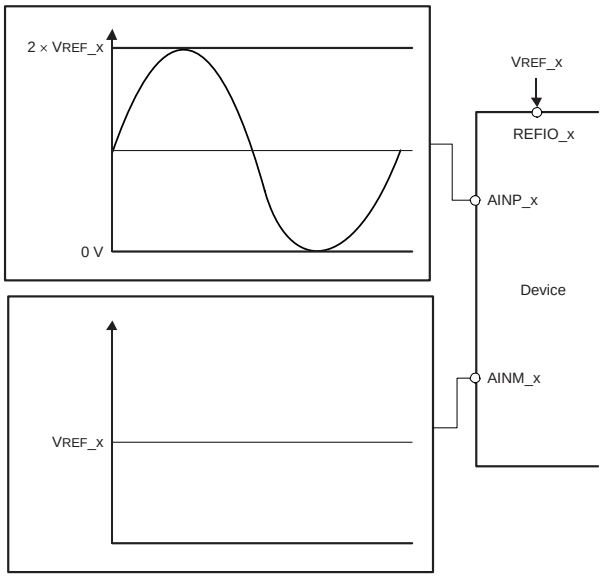

Copyright © 2013–2014, Texas Instruments Incorporated

8.3.3 Transfer Function

The device supports two input configurations:

1. Single-ended inputs, CFR.B7 = 0 (default), or
2. Pseudo-differential inputs, CFR.B7 = 1.

The device also supports two output data formats:

1. Straight binary output, CFR.B4 = 0 (default), or
2. Twos compliment output, CFR.B4 = 1.

Device resolution is calculated by Equation 5:

$$1\ \text{LSB} = (\text{FSR_ADC_x}) / (2^N) \tag{5}$$

where:

- N = 16 (ADS8353), 14 (ADS7853), or 12 (ADS7253) and
- FSR_ADC_x is the full-scale input range of the ADC (refer to the *Analog Input* section for more details)

Table 2 and Table 3 show the different input voltages and the corresponding output codes from the device.

Table 2. Transfer Characteristics for Straight Binary Output (CFR.B4 = 0, Default)

INPUT CONFIGURATION	INPUT VOLTAGE			OUTPUT CODE (Hex)			
				STRAIGHT BINARY (CFR.B4 = 0, Default)			
	AINP_x	AINM_x	AINP_x - AINM_x	CODE	ADS8353	ADS7853	ADS7253
Single-ended (CFR.B7 = 0, default)	≤ 1 LSB	0	≤ 1 LSB	ZC	0000	0000	000
	FSR_ADC_x / 2		FSR_ADC_x / 2	MC	7FFF	1FFF	7FF
	≥ FSR_ADC_x – 1 LSB		≥ FSR_ADC_x – 1 LSB	FSC	FFFF	3FFF	FFF
Pseudo-differential (CFR.B7 = 1)	≤ 1 LSB	FSR_ADC_x / 2	≤ –FSR_ADC_x / 2 + 1 LSB	ZC	0000	0000	000
	FSR_ADC_x / 2		0	MC	7FFF	1FFF	7FF
	≥ FSR_ADC_x – 1 LSB		≥ FSR_ADC_x / 2 – 1 LSB	FSC	FFFF	3FFF	FFF

Table 3. Transfer Characteristics for Twos Compliment Output (CFR.B4 = 1)

INPUT CONFIGURATION	INPUT VOLTAGE			OUTPUT CODE (Hex)			
				TWOS COMPLIMENT (CFR.B4 = 1)			
	AINP_x	AINM_x	AINP_x - AINM_x	CODE	ADS8353	ADS7853	ADS7253
Single-ended (CFR.B7 = 0, default)	≤ 1 LSB	0	≤ 1 LSB	NFSC	8000	2000	800
	FSR_ADC_x / 2		FSR_ADC_x / 2	MC	0000	0000	000
	≥ FSR_ADC_x – 1 LSB		≥ FSR_ADC_x – 1 LSB	PFSC	7FFF	1FFF	7FF
Pseudo-differential (CFR.B7 = 1)	≤ 1 LSB	FSR_ADC_x / 2	≤ –FSR_ADC_x / 2 + 1 LSB	NFSC	8000	2000	800
	FSR_ADC_x / 2		0	MC	0000	0000	000
	≥ FSR_ADC_x – 1 LSB		≥ FSR_ADC_x / 2 – 1 LSB	PFSC	7FFF	1FFF	7FF

Copyright © 2013–2014, Texas Instruments Incorporated

Figure 86 shows the ideal device transfer characteristics for the single-ended analog input.

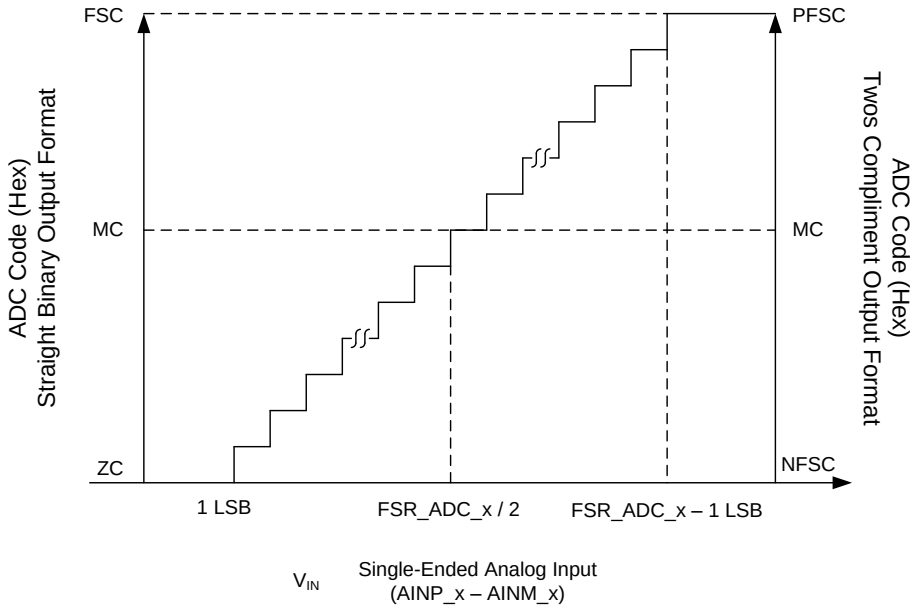

Figure 86. Ideal Transfer Characteristics for a Single-Ended Analog Input

Figure 87 shows the ideal device transfer characteristics for the pseudo-differential analog input.

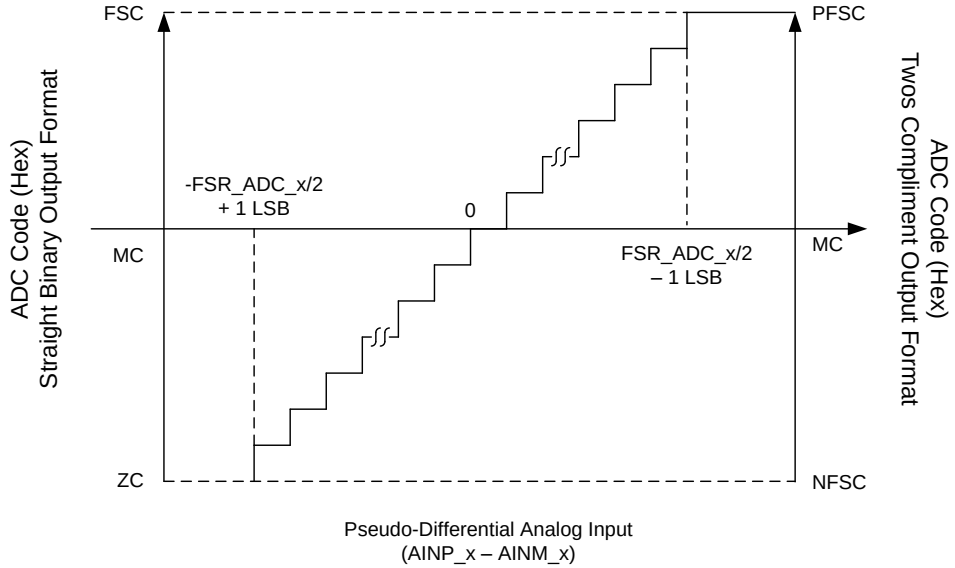

Figure 87. Ideal Transfer Characteristics for a Pseudo-Differential Analog Input

Copyright © 2013–2014, Texas Instruments Incorporated

8.4 Device Functional Modes

The device provides three user-programmable registers: the configuration register (CFR), the REFDAC_A register, and the REFDAC_B register. These registers support write (refer to the *Write to User Programmable Registers* section) and readback (refer to the *Reading User-Programmable Registers* section) operations and allow the user to customize ADC behavior for specific application requirements.

The device supports four interface modes (refer to the *Conversion Data Read* section), two low-power modes (refer to the *Low-Power Modes* section), and short-cycling/reconversion feature (refer to the *Frame Abort, Reconversion, or Short-Cycling* section).

8.5 Register Maps and Serial Interface

8.5.1 Serial Interface

The device uses the serial clock (SCLK) for synchronizing data transfers in and out of the device.

The $\overline{CS}$ signal defines one conversion and serial transfer frame. A frame starts with a $\overline{CS}$ falling edge and ends with a $\overline{CS}$ rising edge. Between the start and end of the frame, a minimum of *N* SCLK falling edges must be provided to validate the read or write operation. As shown in Table 4, *N* depends upon the interface mode used to read the conversion result. When *N* SCLK falling edges are provided, the write operation attempted in the frame is validated and the internal user-programmable registers are updated on the subsequent $\overline{CS}$ rising edge. This $\overline{CS}$ rising edge also ends the frame.

Table 4. SCLK Falling Edges for a Valid Write Operation

INTERFACE MODE	MINIMUM SCLK FALLING EDGES REQUIRED TO VALIDATE WRITE OPERATION *N*
32-CLK, dual-SDO mode (default). See the *32-CLK, Dual-SDO Mode* section.	32
32-CLK, single-SDO mode. See the *32-CLK, Single-SDO Mode* section.	48
16-CLK, dual-SDO mode. See the *16-CLK, Dual-SDO Mode* section.	16
16-CLK, single SDO mode. See the *16-CLK, Single SDO Mode* section.	32

If $\overline{CS}$ is brought high before providing *N* SCLK falling edges, the write operation attempted in the frame is not valid. Refer to the *Frame Abort, Reconversion, or Short-Cycling* section for more details.

8.5.2 Write to User Programmable Registers

The device features three user-programmable registers: the configuration register (CFR), the REFDAC_A register, and the REFDAC_B register. These registers can be written with the device SDI pin. The first 16 bits of data on SDI are latched into the device on the first 16 SCLK falling edges. However, the new configuration takes effect only when the read or write operation is validated. If these registers are not required to update, SDI must remain low during the respective frames.

The first four SDI data bits (B[15:12]) determine what operation is performed (that is, either a read or write operation or no operation), which register address the operation uses, and the function of the next 12 SDI data bits (B[11:0]). Table 5 lists the various combinations supported for B[15:12].

Table 5. Data Write Operation

B15	B14	B13	B12	OPERATION	FUNCTION OF BITS B[11:0]
0	0	0	0	No operation is performed	These bits are ignored
0	0	0	1	REFDAC_A read	000h; see the *Reading User-Programmable Registers* section
0	0	1	0	REFDAC_B read	000h; see the *Reading User-Programmable Registers* section
0	0	1	1	CFR read	000h; see the *Reading User-Programmable Registers* section
1	0	0	0	CFR write	See the *Configuration Register (CFR)* section
1	0	0	1	REFDAC_A write	See the *REFDAC_A* section
1	0	1	0	REFDAC_B write	See the *REFDAC_B* section
1	0	1	1	No operation is performed	These bits are ignored
X	1	X	X	No operation is performed	These bits are ignored

Copyright © 2013–2014, Texas Instruments Incorporated

8.5.2.1 Configuration Register (CFR)

The device operation configuration is controlled by the configuration register (CFR) status. Data written into the CFR in a valid frame (F) determine the device configuration for frame (F+1). The bit functions are outlined in Figure 88. On power-up, all bits in the CFR default to 0.

Figure 88. CFR Bit Functions

15	14	13	12	11	10	9	8
WRITE/READ	0	ADDR1	ADDR0	RD_CLK_ MODE	RD_DATA_ LINES	INPUT_RANGE	0
7	6	5	4	3	2	1	0
INM_SEL	REF_SEL	STANDBY	RD_DATA_ FORMAT	0	0	0	0

Table 6. Configuration Register (CFR) Field Descriptions

Bit	Field	Type	Reset	Description
15	WRITE/READ	W	0h	These bits select the user-programmable register. 1000 = Select this combination to write to the CFR register and to enable bits 11:0
14	0	R/W	0h	
13	ADDR1	R/W	0h	
12	ADDR0	R/W	0h	
11	RD_CLK_MODE	R/W	0h	This bit provides clock mode selection for the serial interface. 0 = Selects 32-CLK mode (default) 1 = Selects 16-CLK mode (Note that the ADS8353 only supports 32-CLK mode. This bit is ignored for the ADS8353.)
10	RD_DATA_LINES	R/W	0h	This bit provides data line selection for the serial interface. 0 = Use SDO_A to output ADC_A data and SDO_B to output of ADC_B data (default) 1 = Use only SDO_A to output of ADC_A data followed by ADC_B data
9	INPUT_RANGE	R/W	0h	This bit selects the maximum input range for the ADC as a function of the reference voltage provided to the ADC. See the *Analog Inputs* section for more details. 0 = FSR equals V_{REF} 1 = FSR equals 2 × V_{REF}
8	0	R/W	0h	This bit must be set to 0 (default)
7	INM_SEL	R/W	0h	This bit selects the voltage to be externally connected to the INM pin. 0 = INM must be externally connected to the GND potential (default) 1 = INM must be externally connected to the FSR_ADC_x / 2 potential
6	REF_SEL	R/W	0h	This bit selects the ADC reference voltage source. Refer to the *Reference* section for more details. 0 = Use external reference (default) 1 = Use internal reference
5	STANDBY	W	0h	This bit is used by the device to enter or exit STANDBY mode. Refer to the *STANDBY Mode* section for more details.
4	RD_DATA_FORMAT	R/W	0h	This bit selects the output data format. 0 = Output is in straight binary format (default) 1 = Output is in twos compliment format
3:0	0	R/W	0h	These bits must be set to 0 (default)

Copyright © 2013–2014, Texas Instruments Incorporated

8.5.2.2 REFDAC Registers (REFDAC_A and REFDAC_B)

The REFDAC registers, bit functions, and resolution information are described in this section.

Figure 89. REFDAC_X Bit Functions

15	14	13	12	11	10	9	8
WRITE/READ	0	ADDR1	ADDR0	D8	D7	D6	D5
7	6	5	4	3	2	1	0
D4	D3	D2	D1	D0	0	0	0

Table 7. REFDAC Registers Field Descriptions

Bit	Field	Type	Reset	Description
15	WRITE/READ	W	0h	These bits select the configurable register address. 1001 = Select this combination to write to the REFDAC_A register 1010 = Select this combination to write to the REFDAC_B register
14	0	R/W	0h	
13	ADDR1	R/W	0h	
12	ADDR0	R/W	0h	
11:3	D[8:0]	R/W	0h	Data to program the individual DAC output voltage. Note: These bits are valid only for bits 15:12 = 1001 or bits 15:12 = 1010. Table 8 shows the relationship between the REFDAC_x programmed value and the DAC_x output voltage.
2:0	0	R/W	0h	This bit must be set to 0 (default)

Table 8. REFDAC Settings

REFDAC_x VALUE (Bits 11:3 in Hex)	B[2:0]	Typical DAC_x OUPTUT VOLTAGE (V)(1)
1FF (default)	000	2.5000
1FE	000	2.4989
1FD	000	2.4978
—	—	—
1D7	000	2.45
—	—	—
1AE	000	2.40
—	—	—
186	000	2.35
—	—	—
15D	000	2.30
—	—	—
134	000	2.25
—	—	—
10C	000	2.20
—	—	—
0E3	000	2.15
—	—	—
0BA	000	2.10
—	—	—
091	000	2.05
—	—	—
069	000	2.00
—	—	—
064 to 000	000	Do not use

(1) Actual output voltage may vary by a few millivolts from the specified value. To obtain the desired output voltage, TI recommends starting with the specified register setting and then experimenting with five codes on either side of the specified register setting.

8.5.3 Data Read Operation

The device supports two types of read operations: reading user-programmable registers and reading conversion results.

8.5.3.1 Reading User-Programmable Registers

The device supports a readback option for all user-programmable registers: CFR, REFDAC_A, and REFDAC_B. Figure 90 shows a detailed timing diagram for this operation.

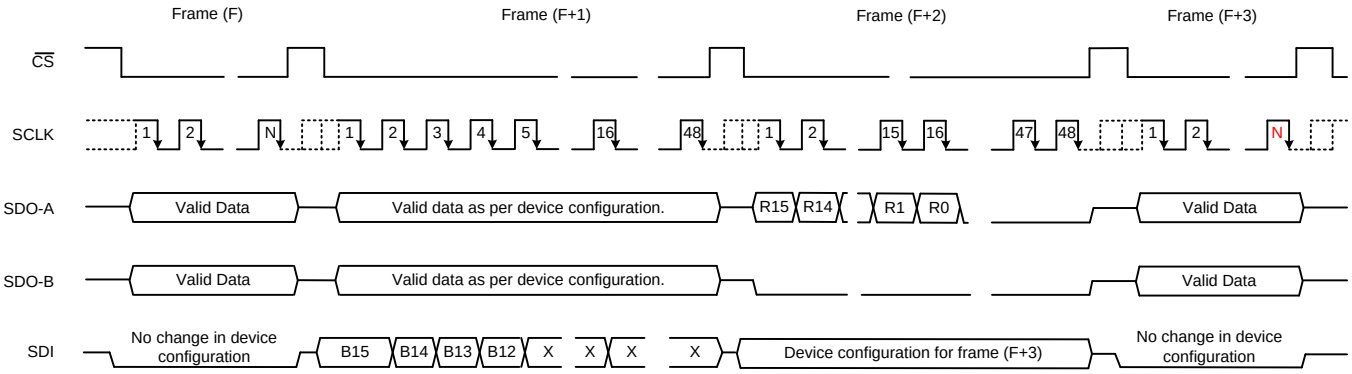

Note that *N* is a function of the device configuration, as described in Table 4.

Figure 90. Register Readback Timing

To readback the user-programmable register settings, the appropriate control word should be transmitted to the device during frame (F+1), as shown in Table 9. Frame (F+1) must have at least 48 SCLK falling edges.

Table 9. Control Word to Readback User-Programmable Registers

USER-PROGRAMMABLE REGISTER	CONTROL WORD TO BE PROGRAMMED IN FRAME (F+1)	
	B[15:12] (Binary)	B[11:0] (Hex)
CFR	0011b	000h
REFDAC_A	0001b	000h
REFDAC_B	0010b	000h

Frame (F+2) must have at least 48 SCLK falling edges. During frame (F+2), SDO_A outputs the contents of the selected user-programmable register on the first 16 SCLK falling edges (as shown in Table 10) and then outputs 0s for any subsequent SCLK falling edges. The SDO_B pin outputs 0s for all the SCLK falling edges.

Table 10. Register Data Read Back

USER-PROGRAMMABLE REGISTER	DATA READ ON SDO-A IN FRAME (F+2)									
	R15	R14	R13	R12	R11	—	R3	R2	R1	R0
CFR	0	0	1	1	CFG.B11	—	CFG.B3	CFG.B2	CFG.B1	CFG.B0
REFDAC_A	0	0	0	1	REFDAC_A.D8	—	REFDAC_A.D0	0	0	0
REFDAC_B	0	0	1	0	REFDAC_B.D8	—	REFDAC_B.D0	0	0	0

Register settings programmed during frame (F+2) determine the device configuration in frame (F+3).

Copyright © 2013–2014, Texas Instruments Incorporated

8.5.3.2 Conversion Data Read

The device provides four different interface modes to the user for reading the conversion result. These modes offer flexible hardware connections and firmware programming. Table 11 shows how to select one of the four interface modes.

Table 11. Interface Mode Selection

CFR.B11	CFR.B10	INTERFACE MODE	MINIMUM SCLK FALLING EDGES REQUIRED TO VALIDATE WRITE OPERATION *N*
0	0	32-CLK, dual-SDO mode (default)	32
0	1	32-CLK, single-SDO mode	48
1	0	16-CLK, dual-SDO mode	16
1	1	16-CLK, single SDO mode	32

In the 32-CLK interface modes, the device uses an internal clock to convert the sampled analog signal. The conversion is completed during the first 16 periods of SCLK and the conversion result can be read on the subsequent SCLK falling edges. All devices in the family (that is, ADS8353, ADS7853, and ADS7253) support the 32-CLK interface modes.

In addition to the 32-CLK interface modes, the ADS7853 and ADS7253 also support the 16-CLK interface modes. By using the 16-CLK interface modes, the same throughput can be achieved at much lower SCLK speeds.

The following sections detail the various interface modes supported by the device.

8.5.3.2.1 32-CLK, Dual-SDO Mode (CFR.B11 = 0, CFR.B10 = 0, Default)

The 32-CLK, dual-SDO mode is the default mode supported by all devices. This mode can also be selected by writing CFR.B11 = 0 and CFR.B10 = 0.

In this mode, the SDO_A pin outputs the ADC_A conversion result and the SDO_B pin outputs the ADC_B conversion result. Figure 91 shows a detailed timing diagram for this mode.

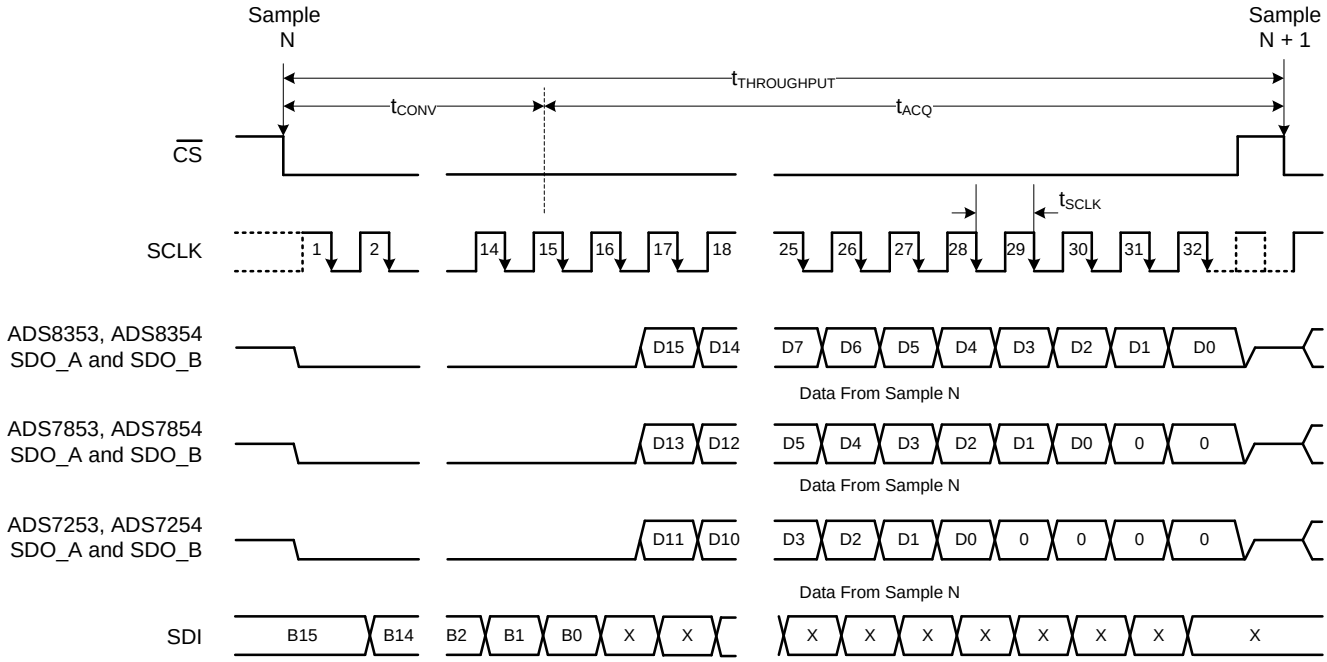

Figure 91. 32-CLK, Dual-SDO Mode Timing Diagram

A $\overline{CS}$ falling edge brings the serial data bus out of 3-state and also outputs a 0 on the SDO_A and SDO_B pins. The device converts the sampled analog input during the conversion time (t_{CONV}). SDO_A and SDO_B read 0 during this period. After completing the conversion process, the sample-and-hold circuit returns to sample mode. The device outputs the MSBs of ADC_A and ADC_B on SDO_A and SDO_B pins, respectively, on the 16th SCLK falling edge. The subsequent SCLK falling edges are used to shift out the rest of the bits of the conversion result, as shown in Table 12.

Table 12. Data Launch Edge

DEVICE	PINS	LAUNCH EDGE												
		$\overline{CS}$	SCLK											$\overline{CS}$
		↓	↓1	—	↓15	↓16	—	↓27	↓28	↓29	↓30	↓31	↓32 ...	↑
ADS8353	SDO-A	0	0	—	0	D15_A	—	D4_A	D3_A	D2_A	D1_A	D0_A	0 ...	Hi-Z
	SDO-B	0	0	—	0	D15_B	—	D4_B	D3_B	D2_B	D1_B	D0_B	0 ...	Hi-Z
ADS7853	SDO-A	0	0	—	0	D13_A	—	D2_A	D1_A	D0_A	0	0	0 ...	Hi-Z
	SDO-B	0	0	—	0	D13_B	—	D2_B	D1_B	D0_B	0	0	0 ...	Hi-Z
ADS7253	SDO-A	0	0	—	0	D11_A	—	D0_A	0	0	0	0	0 ...	Hi-Z
	SDO-B	0	0	—	0	D11_B	—	D0_B	0	0	0	0	0 ...	Hi-Z

In this mode, at least 32 SCLK falling edges must be given to validate the read or write frame. A $\overline{CS}$ rising edge ends the frame and puts the serial bus into 3-state.

Refer to Table 13 for timing specifications specific to this serial interface mode.

Table 13. 32-CLK, Dual-SDO Interface Specific Timing

PARAMETER		TEST CONDITIONS	MIN	TYP	MAX	UNIT
TIMING REQUIREMENTS						
t_{CLK}	CLOCK period	ADS8353	50			ns
		ADS7853	29.4			ns
		ADS7253	29.4			ns
t_{ACQ}	Acquisition time			$33 \times t_{CLK} - t_{CONV}$		ns
TIMING SPECIFICATIONS						
t_{CONV}	Conversion time	ADS8353			730	ns
		ADS7853			450	ns
		ADS7253			450	ns

Copyright © 2013–2014, Texas Instruments Incorporated

8.5.3.2.2 32-CLK, Single-SDO Mode (CFR.B11 = 0, CFR.B10 = 1)

The 32-CLK, single-SDO mode provides the option of using only one SDO pin (SDO_A) to read conversion results from both ADCs (ADC_A and ADC_B). SDO_B remains in 3-state and can be treated as a no connect (NC) pin.

This mode can be selected by writing CFR.B11 = 0 and CFR.B10 = 1. Figure 92 shows a detailed timing diagram for this mode.

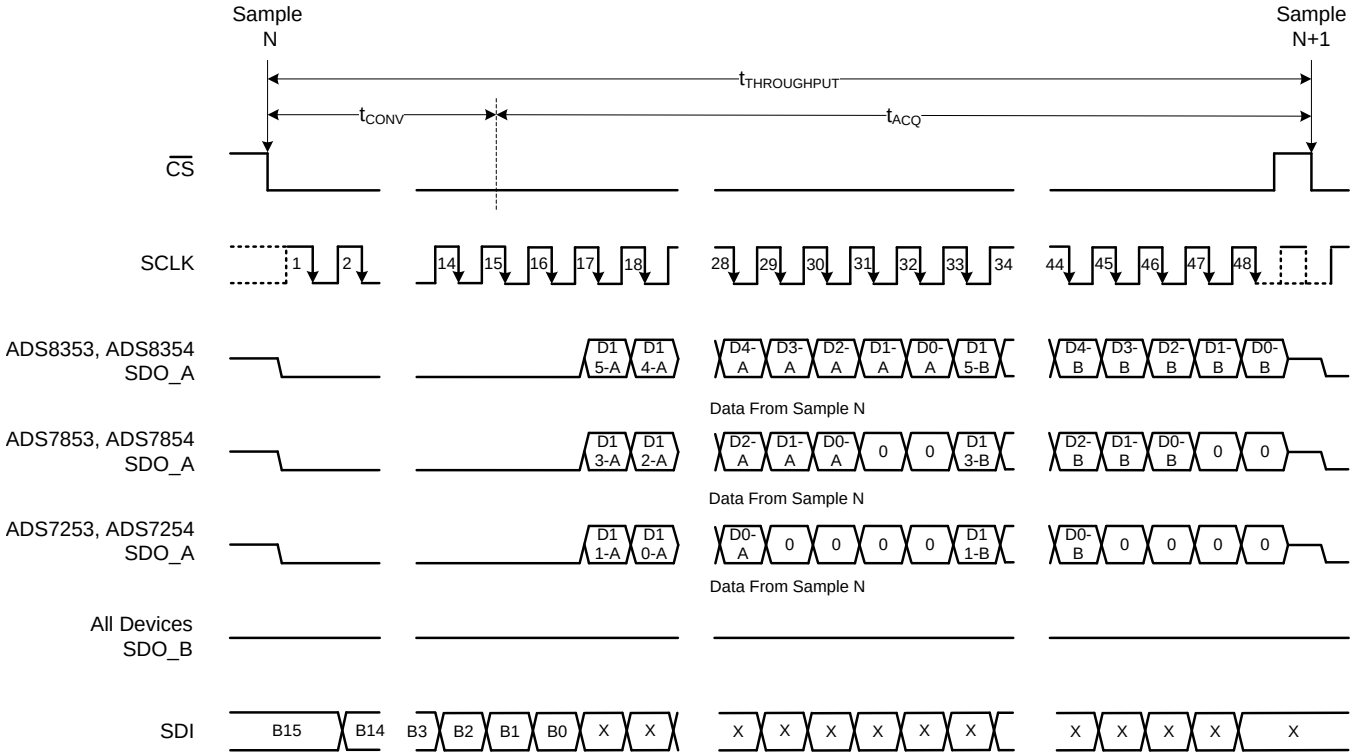

Figure 92. 32-CLK, Single-SDO Mode Timing Diagram

A $\overline{CS}$ falling edge brings the serial data bus out of 3-state and also outputs a 0 on the SDO_A pin. The device converts the sampled analog input during the conversion time (t_{CONV}). SDO_A reads 0 during this period. After competing the conversion process, the sample-and-hold circuit goes back into sample mode. The device outputs the MSB of ADC_A on the SDO_A pin on the 16th SCLK falling edge. The subsequent SCLK falling edges are used to shift out the conversion result of ADC_A followed by the conversion result of ADC_B on the SDO_A pin, as shown in Table 14.

Table 14. Data Launch Edge

DEVICE	PIN	LAUNCH EDGE																			
		$\overline{CS}$	SCLK																		$\overline{CS}$
		↓	↓1	—	↓15	↓16	—	↓27	↓28	↓29	↓30	↓31	↓32	—	↓43	↓44	↓45	↓46	↓47	↓48 ...	↑
ADS8353	SDO-A	0	0	—	0	D15_A	—	D4_A	D3_A	D2_A	D1_A	D0_A	D15_B	—	D4_B	D3_B	D2_B	D1_B	D0_B	0 ...	Hi-Z
ADS7853	SDO-A	0	0	—	0	D13_A	—	D2_A	D1_A	D0_A	0	0	0	—	D2_B	D1_B	D0_B	0	0	0 ...	Hi-Z
ADS7253	SDO-A	0	0	—	0	D11_A	—	D0_A	0	0	0	0	0	—	D0_B	0	0	0	0	0 ...	Hi-Z

In this mode, at least 48 SCLK falling edges must be given to validate the read or write frame. A $\overline{CS}$ rising edge ends the frame and puts the serial bus into 3-state.

Refer to Table 15 for timing specifications specific to this serial interface mode.

Table 15. 32-CLK, Single-SDO Interface Specific Timing

PARAMETER		TEST CONDITIONS	MIN	TYP	MAX	UNIT
TIMING REQUIREMENTS						
t_{CLK}	CLOCK period	ADS8353	50			ns
		ADS7853	29.4			ns
		ADS7253	29.4			ns
t_{ACQ}	Acquisition time		$49 \times t_{CLK} - t_{CONV}$			ns
TIMING SPECIFICATIONS						
t_{CONV}	Conversion time	ADS8353			730	ns
		ADS7853			450	ns
		ADS7253			450	ns

8.5.3.2.3 16-CLK, Dual-SDO Mode (CFR.B11 = 1, CFR.B10 = 0)

The 16-CLK, dual-SDO mode is designed to support the maximum throughput at lower SCLK frequencies. This interface mode is not supported by the ADS8353.

For the ADS7853 and ADS7253, this interface mode can be selected by writing CFR.B11 = 1 and CFR.B10 = 0. In this mode, the SDO_A pin outputs the ADC_A conversion result and the SDO_B pin outputs the ADC_B conversion result. Figure 93 shows a detailed timing diagram for this mode.

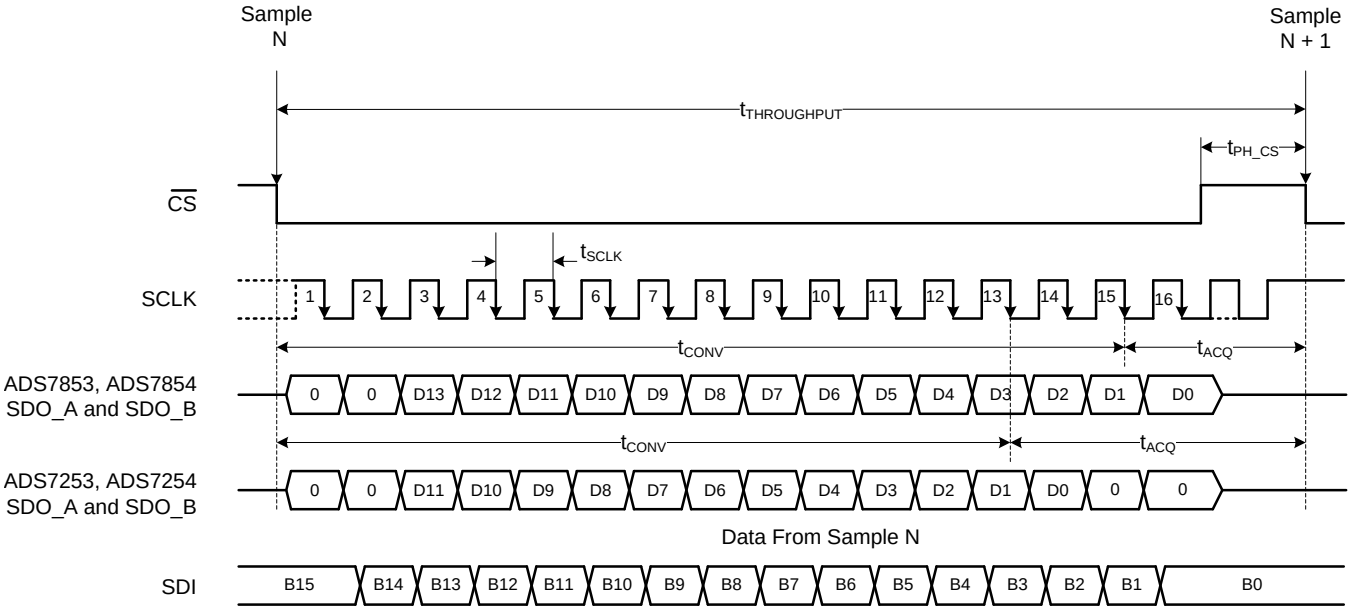

Figure 93. 16-CLK, Dual-SDO Mode Timing Diagram

Copyright © 2013–2014, Texas Instruments Incorporated

A $\overline{CS}$ falling edge brings the serial data bus out of 3-state and also outputs a 0 on the SDO_A and SDO_B pins. The subsequent SCLK falling edges are used for conversion and for data transfer using the serial interface, as shown in Table 16.

The sample-and-hold circuit goes back into sample mode as soon as the conversion process is over.

Table 16. Data Launch Edge

DEVICE	PINS	LAUNCH EDGE								
		$\overline{CS}$	SCLK							$\overline{CS}$
		↓	↓1	↓2	—	↓13	↓14	↓15	↓16 ...	↑
ADS7853	SDO-A	0	0	D13_A	—	D2_A	D1_A	D0_A	0 ...	Hi-Z
	SDO-B	0	0	D13_B	—	D2_B	D1_B	D0_B	0 ...	Hi-Z
ADS7253	SDO-A	0	0	D11_A	—	D0_A	0	0	0 ...	Hi-Z
	SDO-B	0	0	D11_B	—	D0_B	0	0	0 ...	Hi-Z

In this mode, at least 16 SCLK falling edges must be given to validate the read or write frame. A $\overline{CS}$ rising edge ends the frame and puts the serial bus into 3-state.

Refer to Table 17 for timing specifications specific to this serial interface mode.

Table 17. 16-CLK, Dual-SDO Interface Specific Timing

PARAMETER		TEST CONDITIONS	MIN	TYP	MAX	UNIT
TIMING REQUIREMENTS						
t_{CLK}	CLOCK period	ADS7853	55.5			ns
		ADS7253	55.5			ns
t_{ACQ}	Acquisition time	ADS7853		$4 \times t_{CLK}$		ns
		ADS7253		$6 \times t_{CLK}$		ns
TIMING SPECIFICATIONS						
t_{CONV}	Conversion time	ADS7853		$14 \times t_{CLK}$		ns
		ADS7253		$12 \times t_{CLK}$		ns

8.5.3.2.4 16-CLK, Single-SDO Mode (CFR.B11 = 1, CFR.B10 = 1)

The 16-CLK, single-SDO mode provides the option of using only one SDO pin (SDO_A) and a lower-speed clock to read the conversion results of both ADCs. This interface mode is not supported by the ADS8353.

For the ADS7853 and ADS7253, this mode can be selected by writing CFR.B11 = 1 and CFR.B10 = 1. The SDO_A pin is used to output the conversion results of both ADCs (ADC_A and ADC_B). SDO_B remains in 3-state and can be treated as a no connect (NC) pin. Figure 94 shows a detailed timing diagram for this mode.

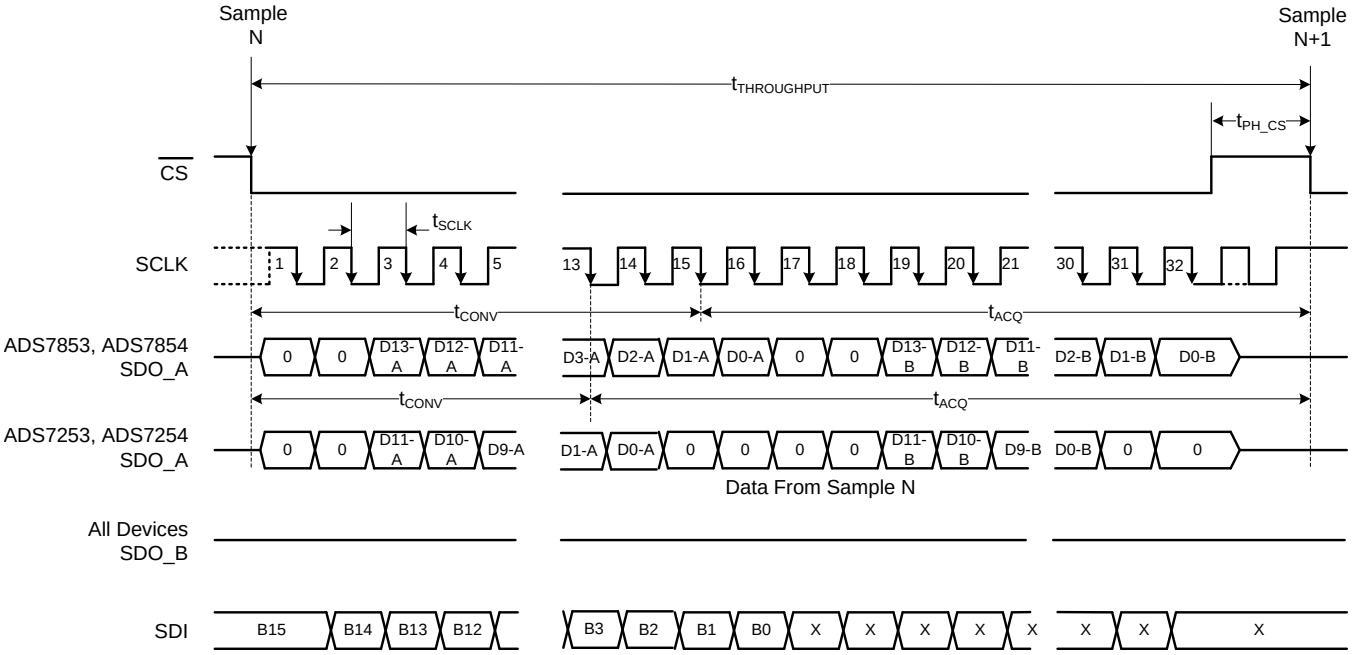

Figure 94. 16-CLK, Single-SDO Mode Timing Diagram

A $\overline{CS}$ falling edge brings the serial data bus out of 3-state and also outputs a 0 on the SDO_A pin. The subsequent SCLK falling edges are used for conversion and for data transfer using the serial interface, as shown in Table 18.

The sample-and-hold circuit goes back into sample mode as soon as the conversion process is over.

Table 18. Data Launch Edge

DEVICE	PIN	LAUNCH EDGE														
		$\overline{CS}$	SCLK													$\overline{CS}$
		↓	↓1	↓2	—	↓13	↓14	↓15	↓16	↓17	↓18	—	↓29	↓30	↓31	↓32 ...	↑
ADS7853	SDO-A	0	0	D13_A	—	D2_A	D1_A	D0_A	0	0	D13_B	—	D2_B	D1_B	D0_B	0 ...	Hi-Z
ADS7253	SDO-A	0	0	D11_A	—	D0_A	0	0	0	0	D11_B	—	D0_B	0	0	0 ...	Hi-Z

Copyright © 2013–2014, Texas Instruments Incorporated

In this mode, at least 32 SCLK falling edges must be given to validate the read/write frame. A $\overline{CS}$ rising edge ends the frame and puts the serial bus into 3-state.

Refer to Table 19 for timing specifications specific to this serial interface mode.

Table 19. 16-CLK, Single-SDO Interface Specific Timing

PARAMETER		TEST CONDITIONS	MIN	TYP	MAX	UNIT
TIMING REQUIREMENTS						
t_{CLK}	CLOCK period	ADS7853	55.5			ns
		ADS7253	55.5			ns
t_{ACQ}	Acquisition time	ADS7853		19 × t_{CLK}		ns
		ADS7253		21 × t_{CLK}		ns
TIMING SPECIFICATIONS						
t_{CONV}	Conversion time	ADS7853		14 × t_{CLK}		ns
		ADS7253		12 × t_{CLK}		ns

8.5.4 Low-Power Modes

In normal mode of operation, all internal circuits of the device are always powered up and the device is always ready to commence a new conversion. This mode enables the device to support the rated throughput. The device also supports two low-power modes to optimize the power consumption at lower throughputs: STANDBY mode and software power-down (SPD) mode.

8.5.4.1 STANDBY Mode

The device supports a STANDBY mode of operation where some of the internal circuits of the device are powered down. However, if bit 6 in configuration register is set to 1 (CFR.B6 = 1), then the internal reference is not powered down and the contents of the REFDAC_A and REFDAC_B registers are retained to enable faster power-up to a normal mode of operation.

As shown in Figure 95, a valid write operation in frame (F) to program the configuration register with B5 set to 1 (CFR.B5 = 1) places the device into a STANDBY mode of operation on the following $\overline{CS}$ rising edge. While in STANDBY mode, SDO_A and SDO_B output all 1s when $\overline{CS}$ is low and remain in 3-state when $\overline{CS}$ is high.

To remain in STANDBY mode, SDI must remain low in the subsequent frames.

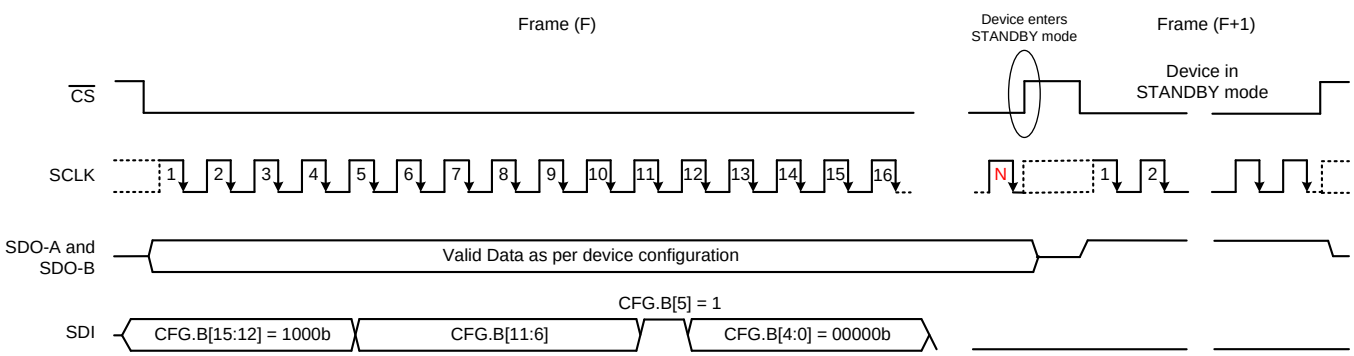

Note that *N* is a function of the device configuration, as described in Table 4.

Figure 95. Enter STANDBY Mode

As shown in Figure 96, a valid write operation in frame (F+3) by writing the configuration register with B5 set to 0 (CFR.B5 = 0) brings the device out of STANDBY mode on the following $\overline{CS}$ rising edge. Frame (F+3) must have at least 48 SCLK falling edges.

After exiting the STANDBY mode, a delay of t_{PU_STDBY} must elapse for the internal circuits to fully power-up and resume normal operation in frame (F+4). Device configuration for frame (F+4) is determined by the status of the CFR.B[11:6] bits programmed during frame (F+3).

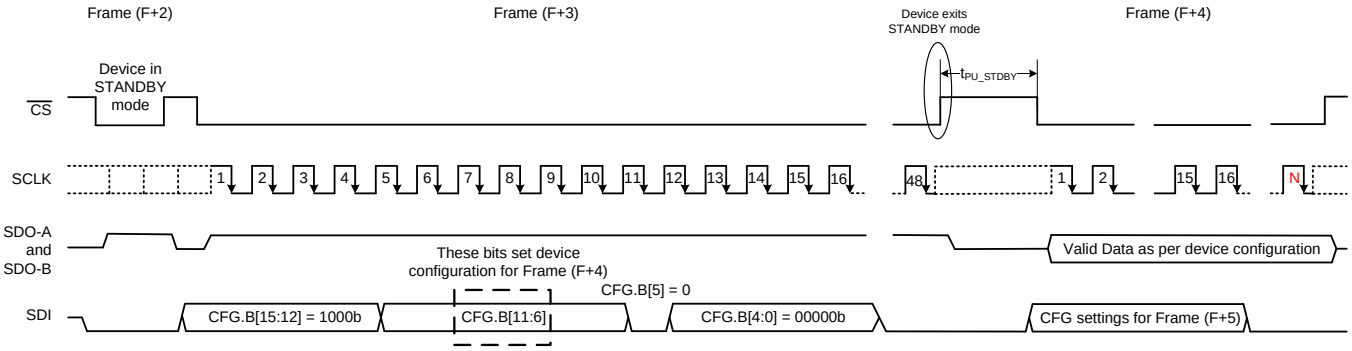

Note that *N* is a function of the device configuration, as described in Table 4.

Figure 96. Exit STANDBY Mode

Refer to the Timing Characteristics: Serial Interface for timing specifications for this operating mode.

Copyright © 2013–2014, Texas Instruments Incorporated

8.5.4.2 Software Power-Down (SPD) Mode

In software power-down (SPD) mode, all internal circuits (including the internal references) are powered down. However, the contents of the REFDAC_A and REFDAC_B registers are retained.

As shown in Figure 97, to enter SPD mode, the device must be selected (by bringing $\overline{CS}$ low) and SDI must be kept high for a minimum of 48 SCLK cycles during frame (F). The device goes to SPD on the $\overline{CS}$ rising edge following frame (F). While in SPD mode, SDO_A and SDO_B go to 3-state irrespective of the status of the $\overline{CS}$ signal.

To remain in SPD mode, SDI must remain high in subsequent frames.

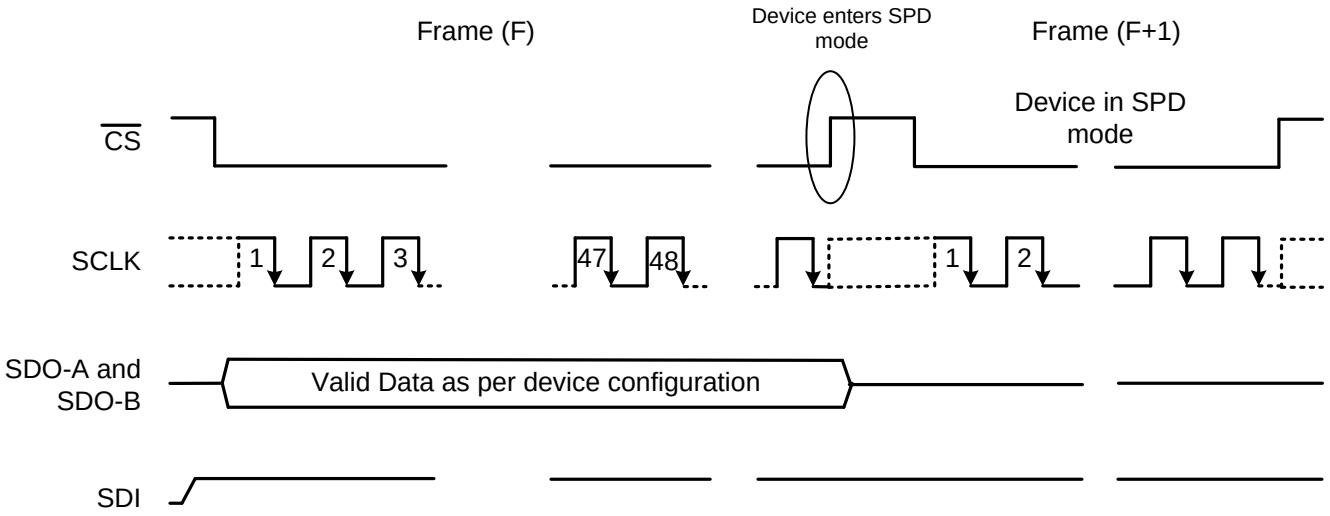

Figure 97. Enter SPD Mode

As shown in Figure 98, to exit SPD mode, the device must be selected (by bringing $\overline{CS}$ low) and SDI must be kept low for a minimum of 48 SCLK cycles during frame (F+3). The device starts powering-up on a $\overline{CS}$ rising edge following frame (F+3). After frame (F+3), a delay of t_{PU_SPD} must elapse before programming the configuration register.

A valid write operation in frame (F+4) sets the device configuration for frame (F+5). Frame (F+4) must have at least 48 SCLK falling edges. The output data in frame (F+4) should be discarded.

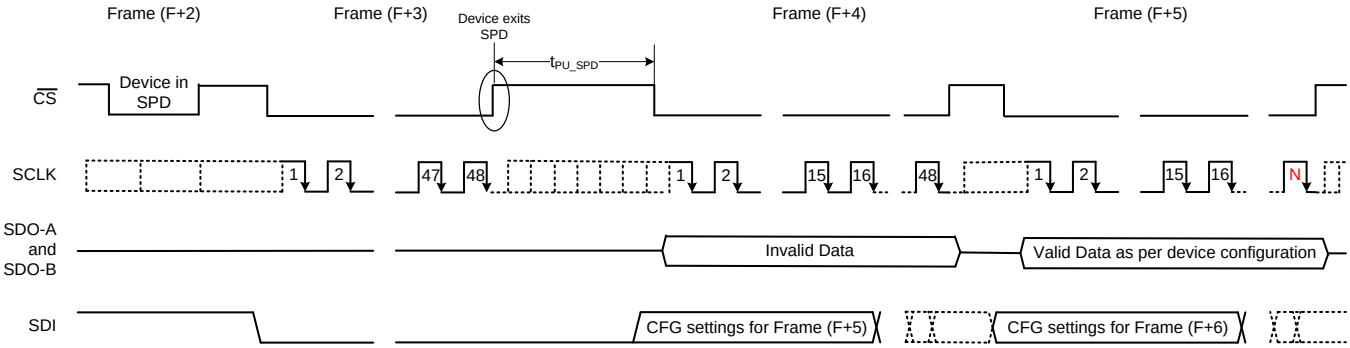

Note that *N* is a function of the device configuration, as described in Table 4.

Figure 98. Exit SPD Mode

Refer to the Timing Characteristics: Serial Interface for timing specifications for this operating mode.

8.5.5 Frame Abort, Reconversion, or Short-Cycling

As discussed in Figure 99, the minimum number of SCLK falling edges (N) that must be provided between the beginning and end of the frame depends on the serial interface mode. The SCLK falling edges (N) program the device and retrieve the conversion result. If $\overline{CS}$ is brought high before the expected number of SCLK falling edges are provided, the current frame is aborted and the device starts sampling the new analog input signal.

If frame (F) is aborted, then the register write operation attempted in frame (F) is considered invalid and the internal registers are not updated. The device continues to have the same configuration in frame (F+1) from frame (F).

The output data bits latched before the $\overline{CS}$ rising edge are still valid data that correspond to sample N.

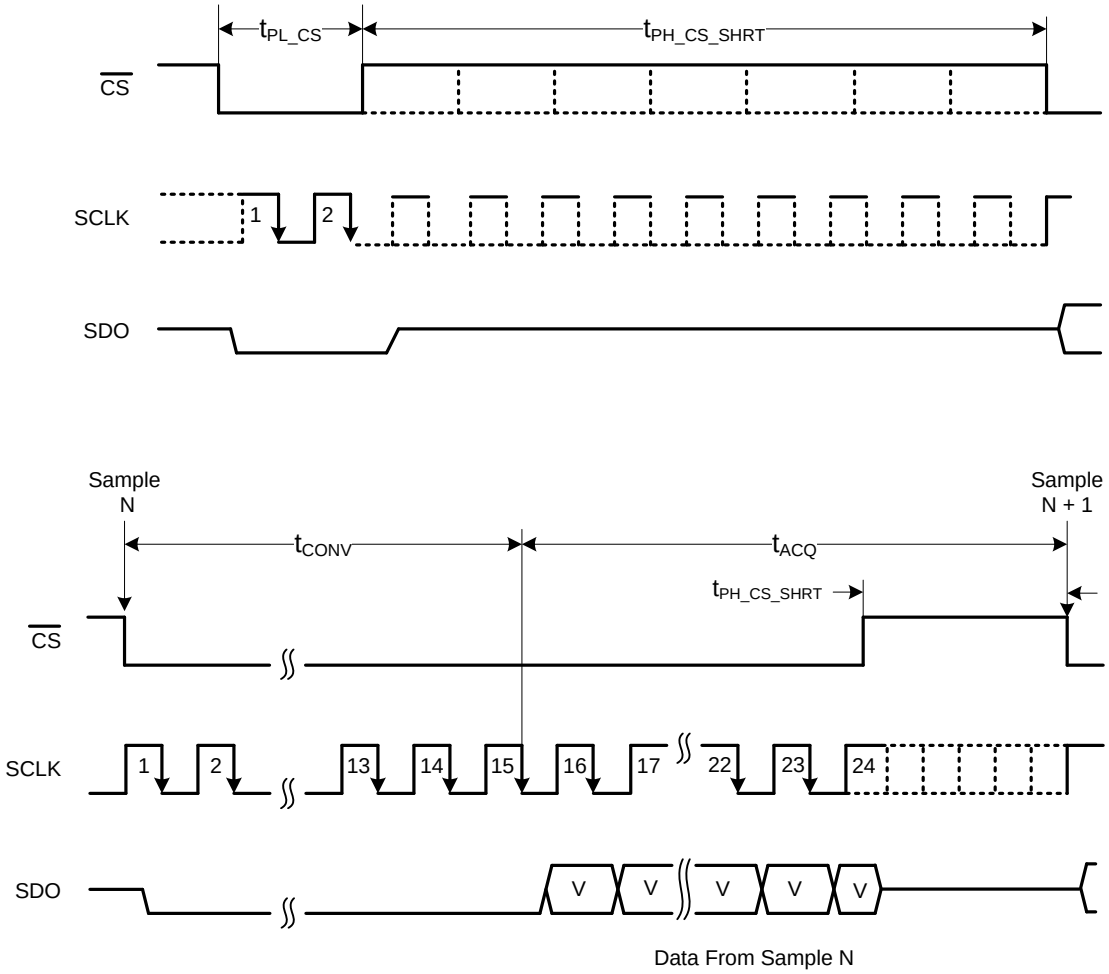

Figure 99. Frame Abort, Reconversion, or Short-Cycling Feature

Refer to the Timing Characteristics: Serial Interface for timing specifications for this operating mode.

Copyright © 2013–2014, Texas Instruments Incorporated

9 Application and Implementation

9.1 Application Information

The two primary circuits required to maximize the performance of a high-precision, successive approximation register (SAR), analog-to-digital converter (ADC) are the input driver and the reference driver circuits. This section details some general principles for designing these circuits, and some application circuits designed using these devices.

The device supports operation either with an internal or external reference source. Refer to the *Reference* section for details about the decoupling requirements.

The reference source to the ADC must provide low-drift and very accurate dc voltage and support the dynamic charge requirements without affecting the noise and linearity performance of the device. The output broadband noise (typically in the order of a few 100 μV_{RMS}) of the reference source must be appropriately filtered by using a low-pass filter with a cutoff frequency of a few hundred hertz. After band-limiting the noise from the reference source, the next important step is to design a reference buffer that can drive the dynamic load posed by the reference input of the ADC. At the start of each conversion, the reference buffer must regulate the voltage of the reference pin within 1 LSB of the intended value. This condition necessitates the use of a large filter capacitor at the reference pin of the ADC. The amplifier selected to drive the reference input pin must be stable while driving this large capacitor and should have low output impedance, low offset, and temperature drift specifications. To reduce the dynamic current requirements and crosstalk between the channels, a separate reference buffer is recommended for driving the reference input of each ADC channel.

The input driver circuit for a high-precision ADC mainly consists of two parts: a driving amplifier and a fly-wheel RC filter. The amplifier is used for signal conditioning of the input voltage and its low output impedance provides a buffer between the signal source and the switched capacitor inputs of the ADC. The RC filter helps attenuate the sampling charge injection from the switched-capacitor input stage of the ADC and functions as an antialiasing filter to band-limit the wideband noise contributed by the front-end circuit. Careful design of the front-end circuit is critical to meet the linearity and noise performance of a high-precision ADC.

9.1.1 Input Amplifier Selection

Selection criteria for the input amplifiers is highly dependent on the input signal type and the performance goals of the data acquisition system. Some key amplifier specifications to consider while selecting an appropriate amplifier to drive the inputs of the ADC are:

- *Small-signal bandwidth.* Select the small-signal bandwidth of the input amplifiers to be as high as possible after meeting the power budget of the system. Higher bandwidth reduces the closed-loop output impedance of the amplifier, thus allowing the amplifier to more easily drive the low cutoff frequency RC filter at the ADC inputs. Higher bandwidth also minimizes the harmonic distortion at higher input frequencies. In order to maintain the overall stability of the input driver circuit, the amplifier bandwidth should be selected as described in Equation 6:

$$Unity - Gain\ Bandwidth \geq 4 \times \left(\frac{1}{2\pi \times (R_{FLT} + R_{FLT}) \times C_{FLT}} \right) \quad (6)$$

- *Noise.* Noise contribution of the front-end amplifiers should be as low as possible to prevent any degradation in SNR performance of the system. As a rule of thumb, to ensure that the noise performance of the data acquisition system is not limited by the front-end circuit, the total noise contribution from the front-end circuit should be kept below 20% of the input-referred noise of the ADC. Noise from the input driver circuit is band-limited by designing a low cutoff frequency RC filter and is calculated by Equation 7:

$$N_G \times \sqrt{2} \times \sqrt{\left(\frac{V_{1/f_AMP_PP}}{6.6} \right)^2 + e_{n_RMS}^2 \times \frac{\pi}{2} \times f_{-3dB}} \leq \frac{1}{5} \times \frac{V_{REF}}{\sqrt{2}} \times 10^{-\left(\frac{SNR(dB)}{20}\right)}$$

where:

- $V_{1\ /\ f_AMP_PP}$ is the peak-to-peak flicker noise in µV,
- e_{n_RMS} is the amplifier broadband noise density in nV/$\sqrt{Hz}$,
- f_{-3dB} is the 3-dB bandwidth of the RC filter, and
- N_G is the noise gain of the front-end circuit, which is equal to 1 in a buffer configuration. (7)

Application Information (continued)

- *Distortion.* Both the ADC and the input driver introduce nonlinearity in a data acquisition block. As a rule of thumb, to ensure that the distortion performance of the data acquisition system is not limited by the front-end circuit, the distortion of the input driver should be at least 10 dB lower than the distortion of the ADC, as shown in Equation 8.

$$THD_{AMP} \leq THD_{ADC} - 10\,(dB) \tag{8}$$

- *Settling Time.* For dc signals with fast transients that are common in a multiplexed application, the input signal must settle to the desired accuracy at the inputs of the ADC during the acquisition time window. This condition is critical to maintain the overall linearity performance of the ADC. Typically, the amplifier data sheets specify the output settling performance only up to 0.1% to 0.001%, which may not be sufficient for the desired accuracy. Therefore, the settling behavior of the input driver should always be verified by TINA™-SPICE simulations before selecting the amplifier.

9.1.2 Antialiasing Filter

Converting analog-to-digital signals requires sampling an input signal at a constant rate. Any higher frequency content in the input signal beyond half the sampling frequency is digitized and folded back into the low-frequency spectrum. This process is called *aliasing*. Therefore, an analog, antialiasing filter must be used to remove the harmonic content from the input signal before being sampled by the ADC. An antialiasing filter is designed as a low-pass, RC filter, for which the 3-dB bandwidth is optimized based on specific application requirements. For dc signals with fast transients (including multiplexed input signals), a high-bandwidth filter is designed to allow accurately settling the signal at the ADC inputs during the small acquisition time window. For ac signals, the filter bandwidth should be kept low to band-limit the noise fed into the ADC input, thereby increasing the signal-to-noise ratio (SNR) of the system.

A filter capacitor, C_{FLT}, connected across the ADC inputs (as shown in Figure 100), filters the noise from the front-end drive circuitry, reduces the sampling charge injection and provides a charge bucket to quickly charge the internal sample-and-hold capacitors during the acquisition process. As a rule of thumb, the value of this capacitor should be at least 10 times the specified value of the ADC sampling capacitance. For these devices, the input sampling capacitance is equal to 40 pF. Thus, the value of C_{FLT} should be greater than 400 pF. The capacitor should be a COG- or NPO-type because these capacitor types have a high-Q, low-temperature coefficient, and stable electrical characteristics under varying voltages, frequency, and time.

Note that driving capacitive loads can degrade the phase margin of the input amplifiers, thus making the amplifier marginally unstable. To avoid amplifier stability issues, series isolation resistors (R_{FLT}) are used at the output of the amplifiers. A higher value of R_{FLT} is helpful from the amplifier stability perspective, but adds distortion as a result of interactions with the nonlinear input impedance of the ADC. Distortion increases with source impedance, input signal frequency, and input signal amplitude. Therefore, the selection of R_{FLT} requires balancing the stability and distortion of the design. For these devices, TI recommends limiting the value of R_{FLT} to a maximum of 22 Ω in order to avoid any significant degradation in linearity performance. The tolerance of the selected resistors can be chosen as 1% because the use of a differential capacitor at the input balances the effects resulting from any resistor mismatch.

$$f_{-3dB} = \frac{1}{2\pi \times (R_{FLT} + R_{FLT}) \times C_{FLT}}$$

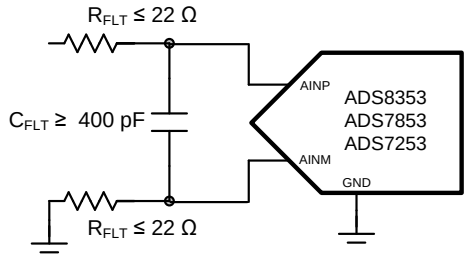

Figure 100. Antialiasing Filter

The input amplifier bandwidth should be much higher than the cutoff frequency of the antialiasing filter. TI strongly recommends performing a SPICE simulation to confirm that the amplifier has more than 40° phase margin with the selected filter. If an amplifier has less than a 40° phase margin with 22-Ω resistors, using a different amplifier with higher bandwidth or reducing the filter cutoff frequency with a larger differential capacitor is advisable.

Copyright © 2013–2014, Texas Instruments Incorporated

9.2 Typical Applications

9.2.1 DAQ Circuit to Achieve Maximum SINAD for a 10-kHz Input Signal at Full Throughput

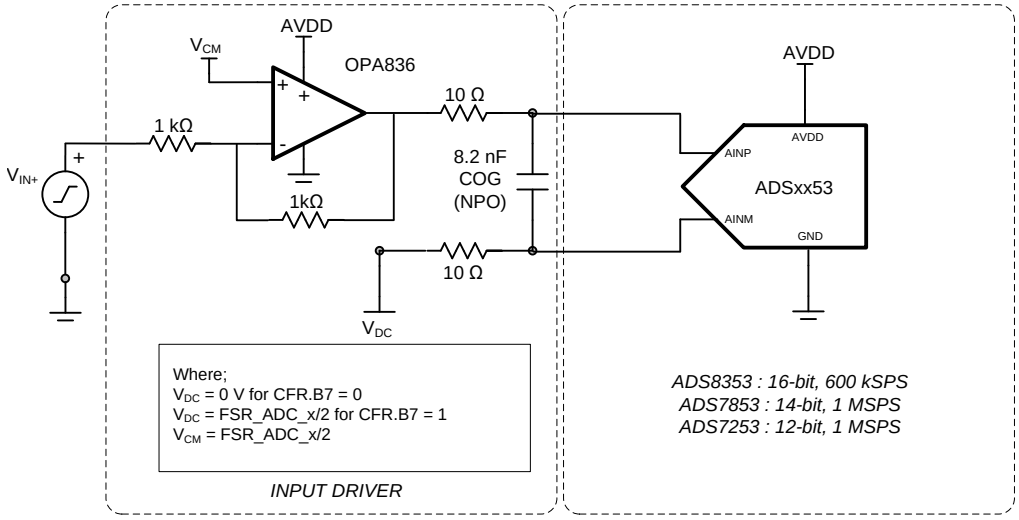

NOTE: Only one ADC channel is shown in this diagram. Replicate the same circuit for other ADC channels.

Figure 101. DAQ Circuit: Maximum SINAD for a 10-kHz Input Signal at Full Throughput, 32-CLK Interface

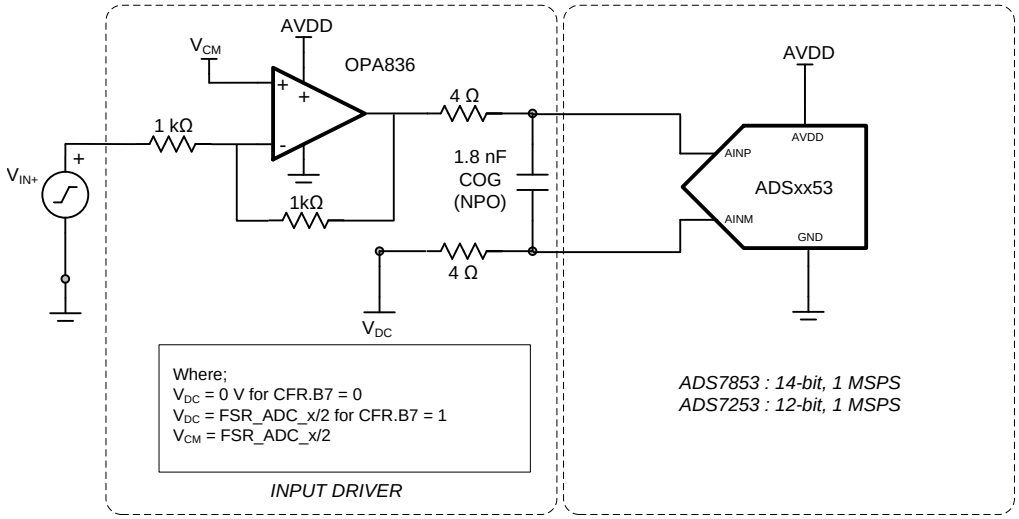

NOTE: Only one ADC channel is shown in this diagram. Replicate the same circuit for other ADC channels.

Figure 102. DAQ Circuit: Maximum SINAD for a 10-kHz Input Signal at Full Throughput, 16-CLK Interface

Typical Applications (continued)

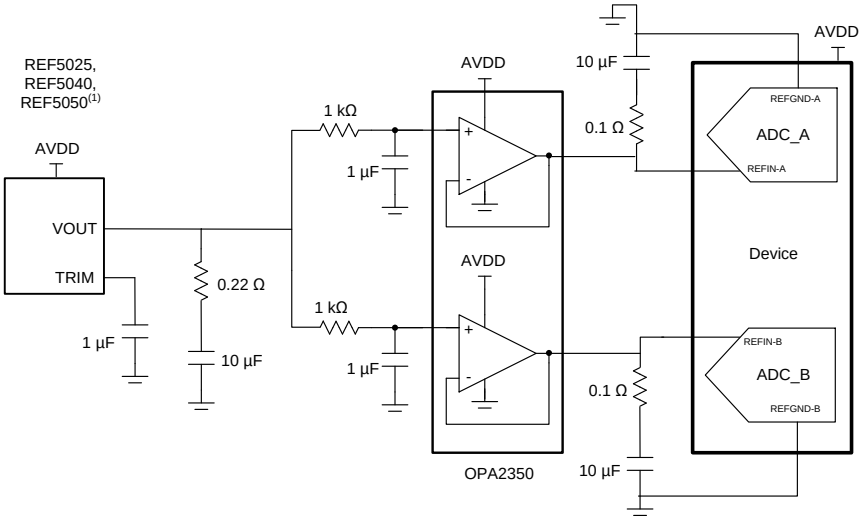

(1) When using the REF5050, AVDD must be set to 5.5 V.

Figure 103. Reference Drive Circuit

9.2.1.1 Design Requirements

To design an application circuit optimized to achieve target specifications listed in Table 20.

Table 20. Target Specifications

TARGET SPECIFICATIONS		TEST CONDITIONS			
SNR	THD	DEVICE	INPUT SIGNAL FREQUENCY	THROUGHPUT	INTERFACE MODE
> 83 dB	< -100 dB	ADS8353	10 kHz	Maximum supported	32-CLK, dual-SDO
> 81 dB	< –95 dB	ADS7853	10 kHz	Maximum supported	32-CLK, dual-SDO
> 77.5 dB	< –85 dB	ADS7853	10 kHz	Maximum supported	16-CLK, dual-SDO
> 71.5 dB	< –88 dB	ADS7253	10 kHz	Maximum supported	32-CLK, dual-SDO
> 70.5 dB	< –80 dB	ADS7253	10 kHz	Maximum supported	16-CLK, dual-SDO

9.2.1.2 Detailed Design Procedure

Best practice is for the distortion from the input driver to be at least 10 dB less than the ADC distortion. The distortion resulting from variation in the common-mode signal is eliminated by using the amplifier in an inverting gain configuration that establishes a fixed common-mode level for the circuit. This configuration also eliminates the requirement of rail-to-rail swing at the amplifier input. The low-power OPA836, used as an input driver, provides exceptional ac performance because of its extremely low-distortion and high-bandwidth specifications. In addition, the components of the antialiasing filter are such that the noise from the front-end circuit is kept low without adding distortion to the input signal.

The application circuit illustrated in Figure 101 is optimized to achieve the lowest distortion and lowest noise for a 10-kHz input signal fed to the ADS8353 or ADS7853 or ADS7253 operating at full throughput with the default 32-CLK, dual-SDO interface mode. The input signal is processed through a high-bandwidth, low-distortion amplifier in an inverting gain configuration and a low-pass RC filter before being fed into the device.

Copyright © 2013–2014, Texas Instruments Incorporated

The ADS7853 and the ADS7253 also support 16-CLK interface modes that achieve the rated throughput rate at much lower SCLK frequencies. However, when using the 16-CLK interface modes, the device receives less acquisition time when compared to the 32-CLK interface modes. The application circuit illustrated in Figure 102 is optimized to achieve the lowest distortion and lowest noise for a 10-kHz input signal fed to the ADS7853 or ADS7253 operating at full throughput with the 16-CLK, dual-SDO interface mode. The input signal is processed through a high-bandwidth, low-distortion amplifier in an inverting gain configuration and a low-pass RC filter before being fed into the device.

Figure 103 illustrates the reference driver circuit when operation with an external reference is desired. The reference voltage is generated by the high-precision, low-noise REF50xx circuit. The output broadband noise of the reference is heavily filtered by a low-pass filter with a 3-dB cutoff frequency of 160 Hz. The decoupling capacitor on each reference pin is selected to be 10 µF. The low output impedance, low noise, and fast settling time makes the OPA2350 a good choice for driving this high capacitive load.

9.2.1.3 Application Curves

To minimize external components and to maximize the dynamic range of the ADC, device is configured to operate with internal reference (CFR.B6 = 1) and 2 x V_{REF_x} input full scale range (CFR.B9 = 1).

Figure 104, Figure 105, and Figure 106, show the FFT plots and test results obtained with the ADS8353, ADS7853, and ADS7253, respectively, operating at full throughput with a 32-CLK interface and the circuit configuration of Figure 101.

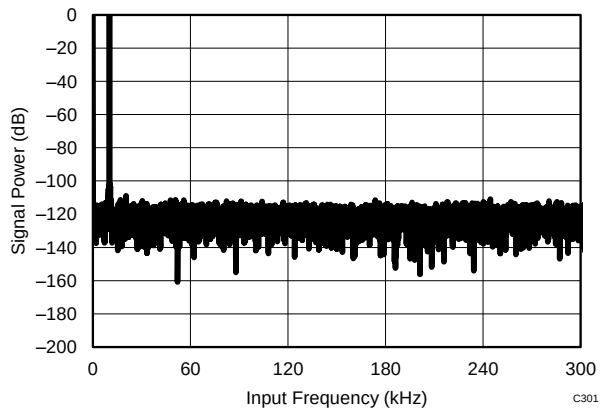

SNR = 83.5 dB THD = –101.2 dB f_{IN} = 10.1 kHz

Figure 104. ADS8353 in 32-CLK Interface Mode

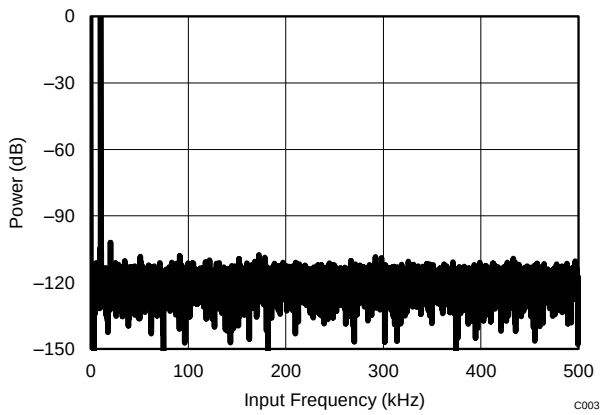

SNR = 82.1 dB THD = –98.2 dB f_{IN} = 10.1 kHz

Figure 105. ADS7853 in 32-CLK Interface Mode

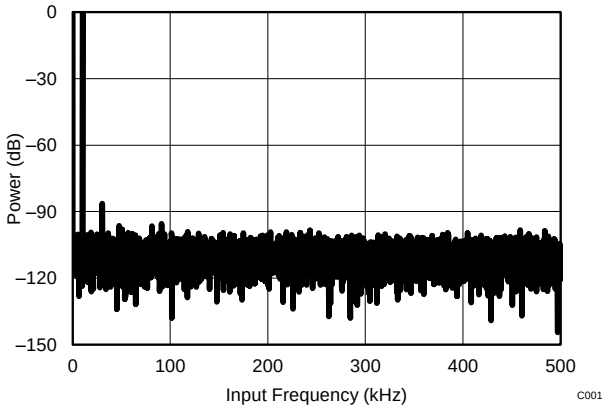

SNR = 72.5 dB THD = –94.2 dB f_{IN} = 10.1 kHz

Figure 106. ADS7253 in 32-CLK Interface Mode

Figure 107 and Figure 108 show the FFT plots and test results obtained with the ADS7853 and ADS7253, respectively, operating at full throughput with 16-CLK interface and the circuit configuration of Figure 102.

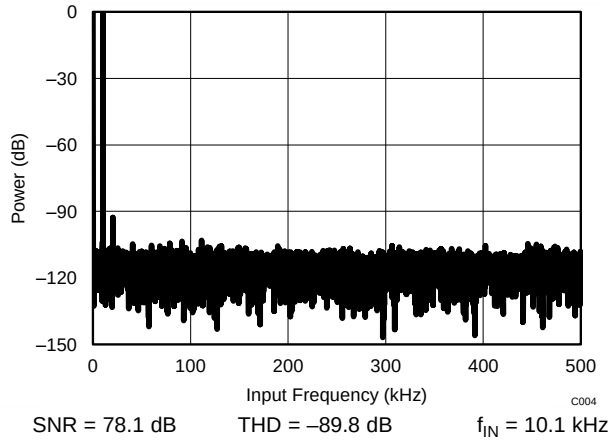

SNR = 78.1 dB THD = –89.8 dB f_{IN} = 10.1 kHz

Figure 107. ADS7853 in 16-CLK Interface Mode

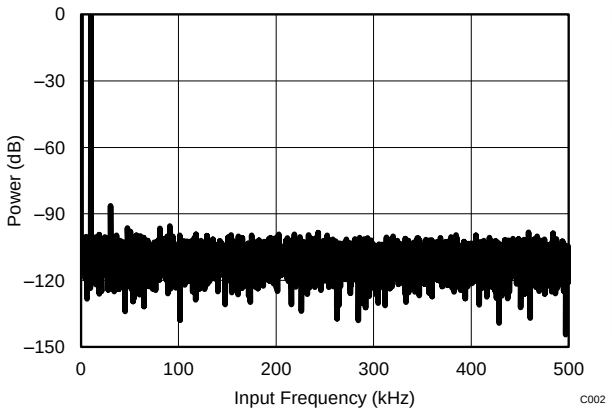

SNR = 71.2 dB THD = –84.9 dB f_{IN} = 10.1 kHz

Figure 108. ADS7253 in 16-CLK Interface Mode

Copyright © 2013–2014, Texas Instruments Incorporated

9.2.2 DAQ Circuit to Achieve Maximum SINAD for a 100-kHz Input Signal at Full Throughput

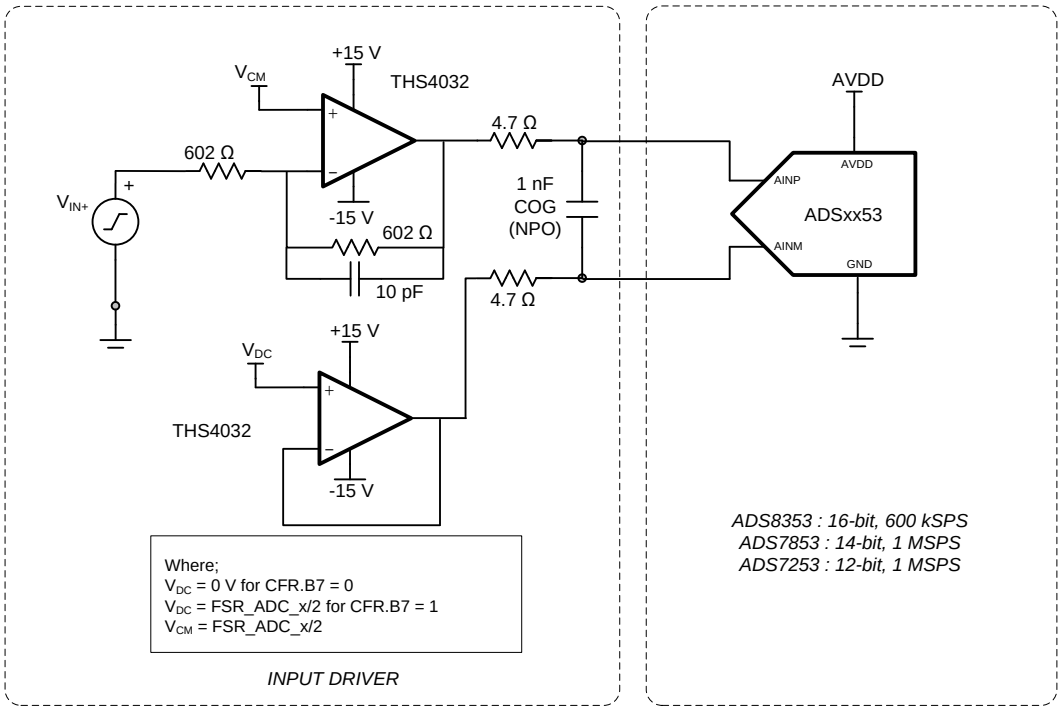

NOTE: Only one ADC channel is shown in this diagram. Replicate the same circuit for other ADC channels.

Figure 109. DAQ Circuit: Maximum SINAD for a 100-kHz Input Signal at Full Throughput

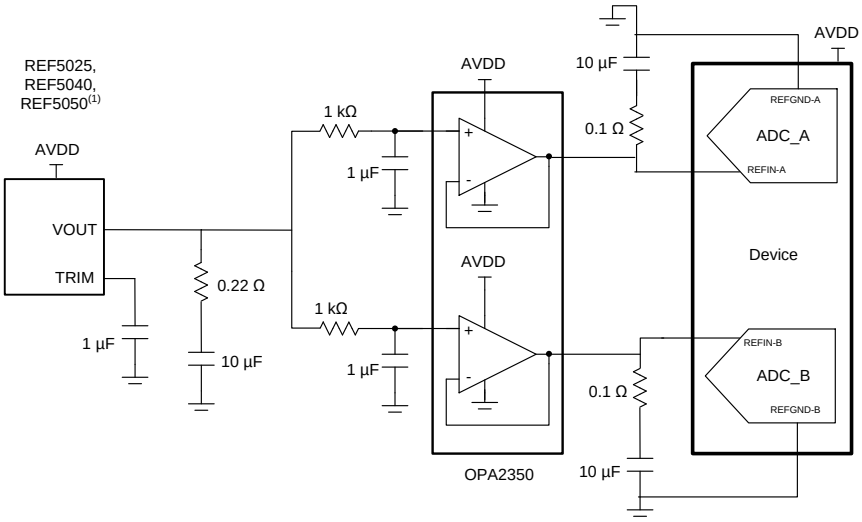

(1) When using the REF5050, AVDD must be set to 5.5 V.

Figure 110. Reference Drive Circuit

9.2.2.1 Design Requirements

To design an application circuit optimized to achieve target specifications listed in Table 21.

Table 21. Target Specifications

TARGET SPECIFICATIONS		TEST CONDITIONS			
SNR	THD	DEVICE	INPUT SIGNAL FREQUENCY	THROUGHPUT	INTERFACE MODE
> 83 dB	< -95 dB	ADS8353	100 kHz	Maximum supported	32-CLK, dual-SDO
> 78.5 dB	< –88 dB	ADS7853	100 kHz	Maximum supported	32-CLK, dual-SDO
> 77.5 dB	< –85 dB	ADS7853	100 kHz	Maximum supported	16-CLK, dual-SDO
> 71.5 dB	< –85 dB	ADS7253	100 kHz	Maximum supported	32-CLK, dual-SDO
> 71 dB	< –84 dB	ADS7253	100 kHz	Maximum supported	16-CLK, dual-SDO

9.2.2.2 Detailed Design Procedure

Best practice is for the distortion from the input driver to be at least 10 dB less than the ADC distortion. The distortion resulting from variation in the common-mode signal is eliminated by using the amplifier in an inverting gain configuration that establishes a fixed common-mode level for the circuit. This configuration also eliminates the requirement of rail-to-rail swing at the amplifier input. The low-power OPA836, used as an input driver, provides exceptional ac performance because of its extremely low-distortion and high-bandwidth specifications. In addition, the components of the antialiasing filter are such that the noise from the front-end circuit is kept low without adding distortion to the input signal. To take full advantage of the pseudo-differential input structure of the ADC, the AINM pin must be driven to the appropriate V_{DC} with the same amplifier and matching source impedance.

The application circuit illustrated in Figure 109 is optimized to achieve the lowest distortion and lowest noise for a 100-kHz input signal fed to the ADS8353 or ADS7853 or ADS7253 operating at full throughput. The THS4032, used as an input driver, provides exceptional ac performance because of its extremely low-distortion, low-noise, and high-bandwidth specifications. In addition, the components of the antialiasing filter are such that the noise from the front-end circuit is kept low without adding distortion to the input signal. External clamp circuit may be required to ensure that the inputs to the device do not exceed AVDD.

Figure 103 illustrates the reference driver circuit when operation with an external reference is desired. The reference voltage is generated by the high-precision, low-noise REF50xx circuit. The output broadband noise of the reference is heavily filtered by a low-pass filter with a 3-dB cutoff frequency of 160 Hz. The decoupling capacitor on each reference pin is selected to be 10 µF. The low output impedance, low noise, and fast settling time makes the OPA2350 a good choice for driving this high capacitive load.

Copyright © 2013–2014, Texas Instruments Incorporated

9.2.2.3 Application Curves

To minimize external components and to maximize the dynamic range of the ADC, device is configured to operate with internal reference (CFR.B6 = 1) and 2 x V_{REF_x} input full scale range (CFR.B9 = 1).

Figure 111, Figure 112, and Figure 113 show the FFT plots and test results obtained with the ADS8353, ADS7853 and ADS7253, respectively, operating at full throughput with a 32-CLK interface and the circuit configuration of Figure 109.

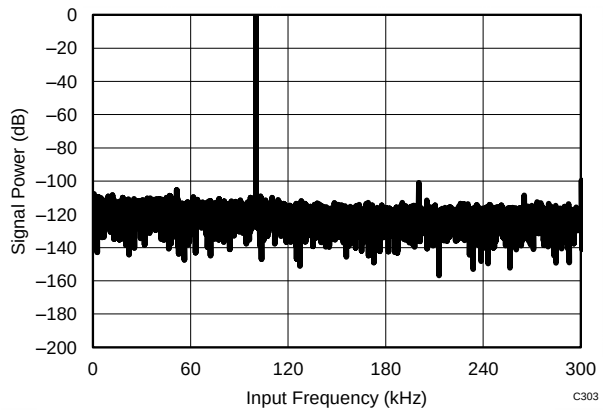

SNR = 83.1 dB THD = –95.5 dB f_{IN} = 100.2 kHz

Figure 111. ADS8353 in 32-CLK Interface Mode

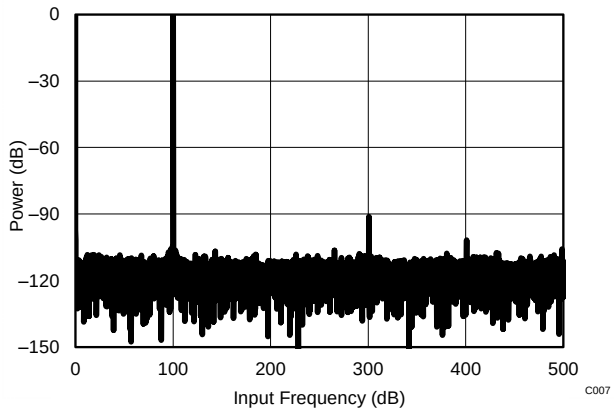

SNR = 79.6 dB THD = –90.9 dB f_{IN} = 100.2 kHz

Figure 112. ADS7853 in 32-CLK Interface Mode

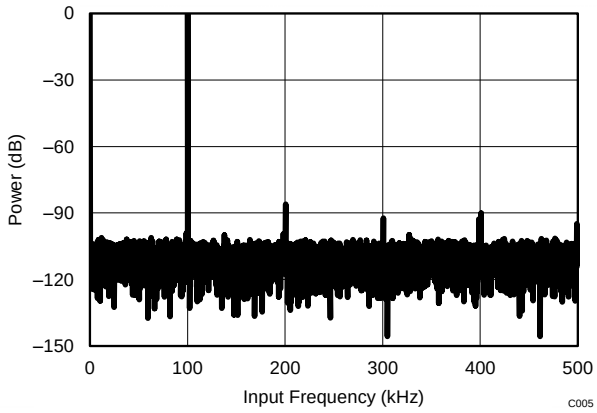

SNR = 72.9 dB THD = –85.8 dB f_{IN} = 100.2 kHz

Figure 113. ADS7253 in 32-CLK Interface Mode

Figure 114 and Figure 115 show the FFT plots and test results obtained with the ADS7853 and ADS7253, respectively, operating with a 16-CLK interface and the circuit configuration of Figure 109.

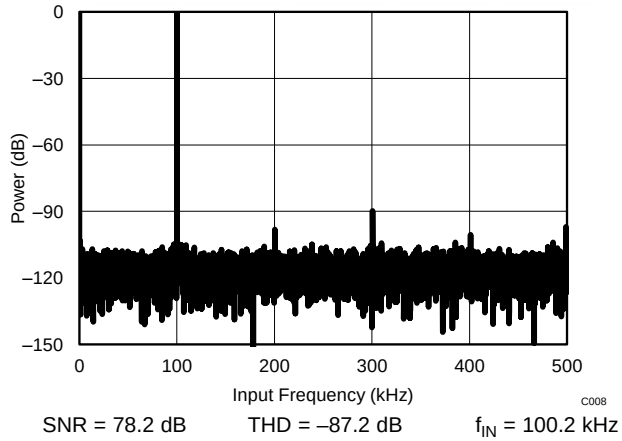

Figure 114. ADS7853 in 16-CLK Interface Mode

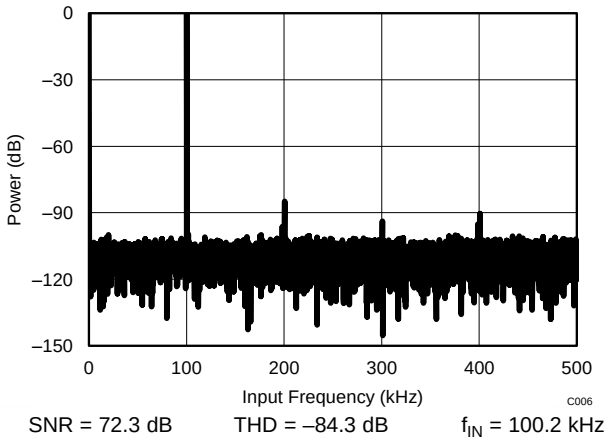

Figure 115. ADS7253 in 16-CLK Interface Mode

Copyright © 2013–2014, Texas Instruments Incorporated

10 Power-Supply Recommendations

The devices have two separate power supplies: AVDD and DVDD. The device operates on AVDD; DVDD is used for the interface circuits. AVDD and DVDD can be independently set to any value within the permissible ranges.

When using the device with 2 × V_{REF} input range (CFR.B9 = 1), the AVDD supply voltage value defines the permissible voltage swing on the analog input pins. To avoid saturation of output codes, and to use the full dynamic range on the analog input pins, AVDD must be set as shown in Equation 9, Equation 10, and Equation 11:

$$AVDD \geq 2 \times V_{REF_A} \quad (9)$$

$$AVDD \geq 2 \times V_{REF_B} \quad (10)$$

$$4.75\ V \leq AVDD \leq 5.25\ V \quad (11)$$

Decouple the AVDD and DVDD pins with the GND pin using individual 10-µF decoupling capacitors, as shown in Figure 116.

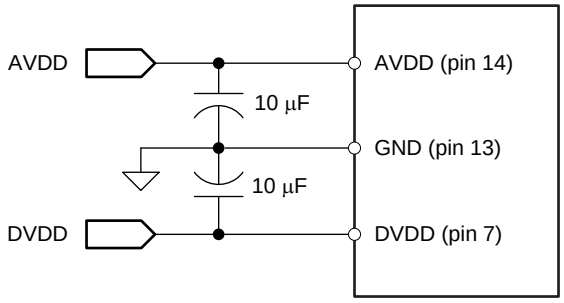

Figure 116. Power-Supply Decoupling

11 Layout

11.1 Layout Guidelines

Figure 117 shows a board layout example for the ADS8353, ADS7853, and ADS7253 with the WQFN package. Use a ground plane underneath the device and partition the PCB into analog and digital sections. Avoid crossing digital lines with the analog signal path and keep the analog input signals and the reference input signals away from noise sources. As shown in Figure 117, the analog input and reference signals are routed on the left side of the board and the digital connections are routed on the right side of the device.

The power sources to the device must be clean and well-bypassed. Use 10-µF, ceramic bypass capacitors in close proximity to the analog (AVDD) and digital (DVDD) power-supply pins. Avoid placing vias between the AVDD and DVDD pins and the bypass capacitors. Connect all ground pins to the ground plane using short, low impedance paths.

The REFIO-A and REFIO-B reference inputs and outputs are bypassed with 10-µF, X7R-grade, 0805-size, 16-V rated ceramic capacitors (C_{REF-x}). Place the reference bypass capacitors as close as possible to the reference REFIO-x pins and connect the bypass capacitors using short, low-inductance connections. Avoid placing vias between the REFIO-x pins and the bypass capacitors. Small 0.1-Ω to 0.2-Ω resistors (R_{REF-x}) are used in series with the reference bypass capacitors to improve stability.

The fly-wheel RC filters are placed immediately next to the input pins. Among ceramic surface-mount capacitors, COG (NPO) ceramic capacitors provide the best capacitance precision. The type of dielectric used in COG (NPO) ceramic capacitors provides the most stable electrical properties over voltage, frequency, and temperature changes. Figure 117 shows C_{IN-A} and C_{IN-B} filter capacitors placed across the analog input pins of the device.

11.2 Layout Example

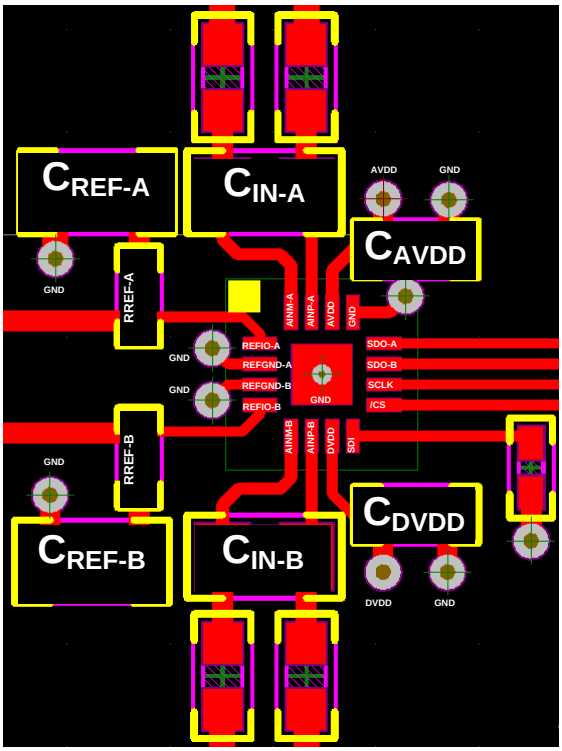

Figure 117. Recommended Layout

Copyright © 2013–2014, Texas Instruments Incorporated

12 Device and Documentation Support

12.1 Related Links

The table below lists quick access links. Categories include technical documents, support and community resources, tools and software, and quick access to sample or buy.

Table 22. Related Links

PARTS	PRODUCT FOLDER	SAMPLE & BUY	TECHNICAL DOCUMENTS	TOOLS & SOFTWARE	SUPPORT & COMMUNITY
ADS8353	Click here	Click here	Click here	Click here	Click here
ADS7853	Click here	Click here	Click here	Click here	Click here
ADS7253	Click here	Click here	Click here	Click here	Click here

12.2 Related Documentation

- TIPD117 Verified Design Reference Guide: *12 Bit 1 MSPS Single Supply Dual Channel Data Acquisition System for Optical Encoders in Motor Control Application* Reference Design, SLAU517.
- REF5050 Data Sheet, SBOS410.
- OPA2350 Data Sheet, SBOS099.
- OPA836, OPA2836 Data Sheet, SLOS712.
- THS4032 Data Sheet, SLOS224.

12.3 Trademarks

TINA is a trademark of Texas Instruments Inc..
All other trademarks are the property of their respective owners.

12.4 Electrostatic Discharge Caution

This integrated circuit can be damaged by ESD. Texas Instruments recommends that all integrated circuits be handled with appropriate precautions. Failure to observe proper handling and installation procedures can cause damage.

ESD damage can range from subtle performance degradation to complete device failure. Precision integrated circuits may be more susceptible to damage because very small parametric changes could cause the device not to meet its published specifications.

12.5 Glossary

SLYZ022 — *TI Glossary*.

This glossary lists and explains terms, acronyms, and definitions.

13 Mechanical, Packaging, and Orderable Information

The following pages include mechanical packaging and orderable information. This information is the most current data available for the designated devices. This data is subject to change without notice and revision of this document. For browser-based versions of this data sheet, refer to the left-hand navigation.

PACKAGING INFORMATION

Orderable part number	Status (1)	Material type (2)	Package | Pins	Package qty | Carrier	RoHS (3)	Lead finish/ Ball material (4)	MSL rating/ Peak reflow (5)	Op temp (°C)	Part marking (6)
ADS7253IPW	Active	Production	TSSOP (PW) | 16	90 | TUBE	Yes	NIPDAU	Level-2-260C-1 YEAR	-40 to 125	ADS7253
ADS7253IPW.A	Active	Production	TSSOP (PW) | 16	90 | TUBE	Yes	NIPDAU	Level-2-260C-1 YEAR	-40 to 125	ADS7253
ADS7253IPW.B	Active	Production	TSSOP (PW) | 16	90 | TUBE	Yes	NIPDAU	Level-2-260C-1 YEAR	-40 to 125	ADS7253
ADS7253IPWR	Active	Production	TSSOP (PW) | 16	2000 | LARGE T&R	Yes	NIPDAU	Level-2-260C-1 YEAR	-40 to 125	ADS7253
ADS7253IPWR.A	Active	Production	TSSOP (PW) | 16	2000 | LARGE T&R	Yes	NIPDAU	Level-2-260C-1 YEAR	-40 to 125	ADS7253
ADS7253IPWR.B	Active	Production	TSSOP (PW) | 16	2000 | LARGE T&R	Yes	NIPDAU	Level-2-260C-1 YEAR	-40 to 125	ADS7253
ADS7253IPWRG4	Active	Production	TSSOP (PW) | 16	2000 | LARGE T&R	Yes	NIPDAU	Level-2-260C-1 YEAR	-40 to 125	ADS7253
ADS7253IPWRG4.A	Active	Production	TSSOP (PW) | 16	2000 | LARGE T&R	Yes	NIPDAU	Level-2-260C-1 YEAR	-40 to 125	ADS7253
ADS7253IPWRG4.B	Active	Production	TSSOP (PW) | 16	2000 | LARGE T&R	Yes	NIPDAU	Level-2-260C-1 YEAR	-40 to 125	ADS7253
ADS7253IRTER	Active	Production	WQFN (RTE) | 16	3000 | LARGE T&R	Yes	NIPDAU	Level-2-260C-1 YEAR	-40 to 125	7253
ADS7253IRTER.A	Active	Production	WQFN (RTE) | 16	3000 | LARGE T&R	Yes	NIPDAU	Level-2-260C-1 YEAR	-40 to 125	7253
ADS7253IRTER.B	Active	Production	WQFN (RTE) | 16	3000 | LARGE T&R	Yes	NIPDAU	Level-2-260C-1 YEAR	-40 to 125	7253
ADS7253IRTET	Active	Production	WQFN (RTE) | 16	250 | SMALL T&R	Yes	NIPDAU	Level-2-260C-1 YEAR	-40 to 125	7253
ADS7253IRTET.A	Active	Production	WQFN (RTE) | 16	250 | SMALL T&R	Yes	NIPDAU	Level-2-260C-1 YEAR	-40 to 125	7253
ADS7253IRTET.B	Active	Production	WQFN (RTE) | 16	250 | SMALL T&R	Yes	NIPDAU	Level-2-260C-1 YEAR	-40 to 125	7253
ADS7253IRTETG4	Active	Production	WQFN (RTE) | 16	250 | SMALL T&R	Yes	NIPDAU	Level-2-260C-1 YEAR	-40 to 125	7253
ADS7253IRTETG4.A	Active	Production	WQFN (RTE) | 16	250 | SMALL T&R	Yes	NIPDAU	Level-2-260C-1 YEAR	-40 to 125	7253
ADS7253IRTETG4.B	Active	Production	WQFN (RTE) | 16	250 | SMALL T&R	Yes	NIPDAU	Level-2-260C-1 YEAR	-40 to 125	7253
ADS7853IPW	Active	Production	TSSOP (PW) | 16	90 | TUBE	Yes	NIPDAU	Level-2-260C-1 YEAR	-40 to 125	ADS7853
ADS7853IPW.A	Active	Production	TSSOP (PW) | 16	90 | TUBE	Yes	NIPDAU	Level-2-260C-1 YEAR	-40 to 125	ADS7853
ADS7853IPW.B	Active	Production	TSSOP (PW) | 16	90 | TUBE	Yes	NIPDAU	Level-2-260C-1 YEAR	-40 to 125	ADS7853
ADS7853IPWR	Active	Production	TSSOP (PW) | 16	2000 | LARGE T&R	Yes	NIPDAU	Level-2-260C-1 YEAR	-40 to 125	ADS7853
ADS7853IPWR.A	Active	Production	TSSOP (PW) | 16	2000 | LARGE T&R	Yes	NIPDAU	Level-2-260C-1 YEAR	-40 to 125	ADS7853
ADS7853IPWR.B	Active	Production	TSSOP (PW) | 16	2000 | LARGE T&R	Yes	NIPDAU	Level-2-260C-1 YEAR	-40 to 125	ADS7853
ADS7853IRTER	Active	Production	WQFN (RTE) | 16	3000 | LARGE T&R	Yes	NIPDAU	Level-2-260C-1 YEAR	-40 to 125	7853
ADS7853IRTER.B	Active	Production	WQFN (RTE) | 16	3000 | LARGE T&R	Yes	NIPDAU	Level-2-260C-1 YEAR	-40 to 125	7853
ADS7853IRTERG4	Active	Production	WQFN (RTE) | 16	3000 | LARGE T&R	Yes	NIPDAU	Level-2-260C-1 YEAR	-40 to 125	7853
ADS7853IRTERG4.B	Active	Production	WQFN (RTE) | 16	3000 | LARGE T&R	Yes	NIPDAU	Level-2-260C-1 YEAR	-40 to 125	7853
ADS7853IRTET	Active	Production	WQFN (RTE) | 16	250 | SMALL T&R	Yes	NIPDAU	Level-2-260C-1 YEAR	-40 to 125	7853

Orderable part number	Status (1)	Material type (2)	Package | Pins	Package qty | Carrier	RoHS (3)	Lead finish/ Ball material (4)	MSL rating/ Peak reflow (5)	Op temp (°C)	Part marking (6)
ADS7853IRTET.A	Active	Production	WQFN (RTE) | 16	250 | SMALL T&R	Yes	NIPDAU	Level-2-260C-1 YEAR	-40 to 125	7853
ADS7853IRTET.B	Active	Production	WQFN (RTE) | 16	250 | SMALL T&R	Yes	NIPDAU	Level-2-260C-1 YEAR	-40 to 125	7853
ADS8353IPW	Active	Production	TSSOP (PW) | 16	90 | TUBE	Yes	NIPDAU	Level-2-260C-1 YEAR	-40 to 125	ADS8353
ADS8353IPW.A	Active	Production	TSSOP (PW) | 16	90 | TUBE	Yes	NIPDAU	Level-2-260C-1 YEAR	-40 to 125	ADS8353
ADS8353IPW.B	Active	Production	TSSOP (PW) | 16	90 | TUBE	Yes	NIPDAU	Level-2-260C-1 YEAR	-40 to 125	ADS8353
ADS8353IPWR	Active	Production	TSSOP (PW) | 16	2000 | LARGE T&R	Yes	NIPDAU	Level-2-260C-1 YEAR	-40 to 125	ADS8353
ADS8353IPWR.A	Active	Production	TSSOP (PW) | 16	2000 | LARGE T&R	Yes	NIPDAU	Level-2-260C-1 YEAR	-40 to 125	ADS8353
ADS8353IPWR.B	Active	Production	TSSOP (PW) | 16	2000 | LARGE T&R	Yes	NIPDAU	Level-2-260C-1 YEAR	-40 to 125	ADS8353
ADS8353IPWRG4	Active	Production	TSSOP (PW) | 16	2000 | LARGE T&R	Yes	NIPDAU	Level-2-260C-1 YEAR	-40 to 125	ADS8353
ADS8353IPWRG4.A	Active	Production	TSSOP (PW) | 16	2000 | LARGE T&R	Yes	NIPDAU	Level-2-260C-1 YEAR	-40 to 125	ADS8353
ADS8353IPWRG4.B	Active	Production	TSSOP (PW) | 16	2000 | LARGE T&R	Yes	NIPDAU	Level-2-260C-1 YEAR	-40 to 125	ADS8353
ADS8353IRTER	Active	Production	WQFN (RTE) | 16	3000 | LARGE T&R	Yes	NIPDAU	Level-2-260C-1 YEAR	-40 to 125	8353
ADS8353IRTER.A	Active	Production	WQFN (RTE) | 16	3000 | LARGE T&R	Yes	NIPDAU	Level-2-260C-1 YEAR	-40 to 125	8353
ADS8353IRTER.B	Active	Production	WQFN (RTE) | 16	3000 | LARGE T&R	Yes	NIPDAU	Level-2-260C-1 YEAR	-40 to 125	8353
ADS8353IRTERG4	Active	Production	WQFN (RTE) | 16	3000 | LARGE T&R	Yes	NIPDAU	Level-2-260C-1 YEAR	-40 to 125	8353
ADS8353IRTERG4.A	Active	Production	WQFN (RTE) | 16	3000 | LARGE T&R	Yes	NIPDAU	Level-2-260C-1 YEAR	-40 to 125	8353
ADS8353IRTERG4.B	Active	Production	WQFN (RTE) | 16	3000 | LARGE T&R	Yes	NIPDAU	Level-2-260C-1 YEAR	-40 to 125	8353
ADS8353IRTET	Active	Production	WQFN (RTE) | 16	250 | SMALL T&R	Yes	NIPDAU	Level-2-260C-1 YEAR	-40 to 125	8353
ADS8353IRTET.A	Active	Production	WQFN (RTE) | 16	250 | SMALL T&R	Yes	NIPDAU	Level-2-260C-1 YEAR	-40 to 125	8353
ADS8353IRTET.B	Active	Production	WQFN (RTE) | 16	250 | SMALL T&R	Yes	NIPDAU	Level-2-260C-1 YEAR	-40 to 125	8353

(1) **Status:** For more details on status, see our product life cycle.

(2) **Material type:** When designated, preproduction parts are prototypes/experimental devices, and are not yet approved or released for full production. Testing and final process, including without limitation quality assurance, reliability performance testing, and/or process qualification, may not yet be complete, and this item is subject to further changes or possible discontinuation. If available for ordering, purchases will be subject to an additional waiver at checkout, and are intended for early internal evaluation purposes only. These items are sold without warranties of any kind.

(3) **RoHS values:** Yes, No, RoHS Exempt. See the TI RoHS Statement for additional information and value definition.

(4) **Lead finish/Ball material:** Parts may have multiple material finish options. Finish options are separated by a vertical ruled line. Lead finish/Ball material values may wrap to two lines if the finish value exceeds the maximum column width.

(5) **MSL rating/Peak reflow:** The moisture sensitivity level ratings and peak solder (reflow) temperatures. In the event that a part has multiple moisture sensitivity ratings, only the lowest level per JEDEC standards is shown. Refer to the shipping label for the actual reflow temperature that will be used to mount the part to the printed circuit board.

(6) **Part marking:** There may be an additional marking, which relates to the logo, the lot trace code information, or the environmental category of the part.

Multiple part markings will be inside parentheses. Only one part marking contained in parentheses and separated by a "~" will appear on a part. If a line is indented then it is a continuation of the previous line and the two combined represent the entire part marking for that device.

Important Information and Disclaimer: The information provided on this page represents TI's knowledge and belief as of the date that it is provided. TI bases its knowledge and belief on information provided by third parties, and makes no representation or warranty as to the accuracy of such information. Efforts are underway to better integrate information from third parties. TI has taken and continues to take reasonable steps to provide representative and accurate information but may not have conducted destructive testing or chemical analysis on incoming materials and chemicals. TI and TI suppliers consider certain information to be proprietary, and thus CAS numbers and other limited information may not be available for release.

In no event shall TI's liability arising out of such information exceed the total purchase price of the TI part(s) at issue in this document sold by TI to Customer on an annual basis.

OTHER QUALIFIED VERSIONS OF ADS8353 :

- Automotive : ADS8353-Q1

NOTE: Qualified Version Definitions:

- Automotive - Q100 devices qualified for high-reliability automotive applications targeting zero defects

TAPE AND REEL INFORMATION

REEL DIMENSIONS

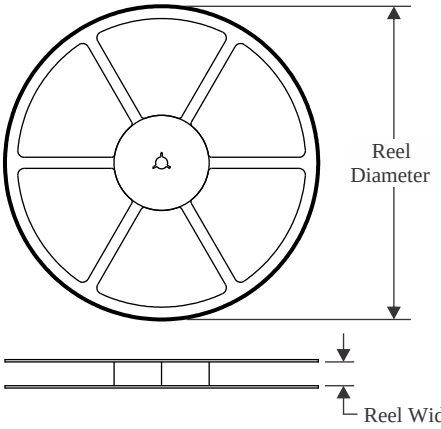

TAPE DIMENSIONS

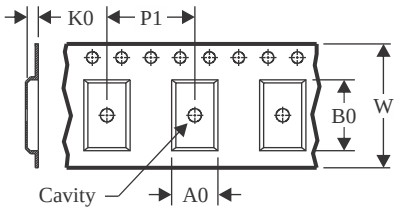

A0	Dimension designed to accommodate the component width
B0	Dimension designed to accommodate the component length
K0	Dimension designed to accommodate the component thickness
W	Overall width of the carrier tape
P1	Pitch between successive cavity centers

QUADRANT ASSIGNMENTS FOR PIN 1 ORIENTATION IN TAPE

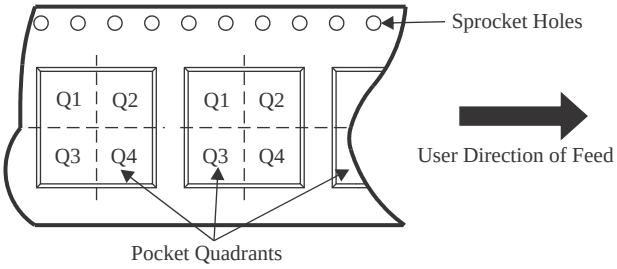

*All dimensions are nominal

Device	Package Type	Package Drawing	Pins	SPQ	Reel Diameter (mm)	Reel Width W1 (mm)	A0 (mm)	B0 (mm)	K0 (mm)	P1 (mm)	W (mm)	Pin1 Quadrant
ADS7253IPWR	TSSOP	PW	16	2000	330.0	12.4	6.9	5.6	1.6	8.0	12.0	Q1
ADS7253IPWRG4	TSSOP	PW	16	2000	330.0	12.4	6.9	5.6	1.6	8.0	12.0	Q1
ADS7253IRTER	WQFN	RTE	16	3000	330.0	12.4	3.3	3.3	1.1	8.0	12.0	Q2
ADS7253IRTET	WQFN	RTE	16	250	180.0	12.4	3.3	3.3	1.1	8.0	12.0	Q2
ADS7253IRTETG4	WQFN	RTE	16	250	180.0	12.4	3.3	3.3	1.1	8.0	12.0	Q2
ADS7853IPWR	TSSOP	PW	16	2000	330.0	12.4	6.9	5.6	1.6	8.0	12.0	Q1
ADS7853IRTER	WQFN	RTE	16	3000	330.0	12.4	3.3	3.3	1.1	8.0	12.0	Q2
ADS7853IRTERG4	WQFN	RTE	16	3000	330.0	12.4	3.3	3.3	1.1	8.0	12.0	Q2
ADS7853IRTET	WQFN	RTE	16	250	180.0	12.4	3.3	3.3	1.1	8.0	12.0	Q2
ADS8353IPWR	TSSOP	PW	16	2000	330.0	12.4	6.9	5.6	1.6	8.0	12.0	Q1
ADS8353IPWRG4	TSSOP	PW	16	2000	330.0	12.4	6.9	5.6	1.6	8.0	12.0	Q1
ADS8353IRTER	WQFN	RTE	16	3000	330.0	12.4	3.3	3.3	1.1	8.0	12.0	Q2
ADS8353IRTERG4	WQFN	RTE	16	3000	330.0	12.4	3.3	3.3	1.1	8.0	12.0	Q2
ADS8353IRTET	WQFN	RTE	16	250	180.0	12.4	3.3	3.3	1.1	8.0	12.0	Q2

TAPE AND REEL BOX DIMENSIONS

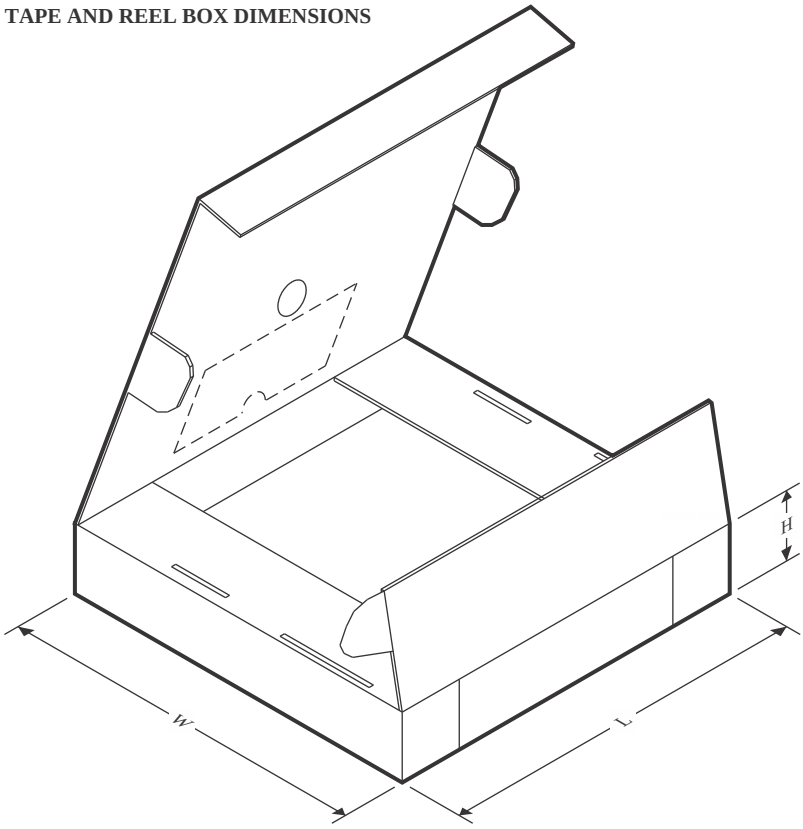

*All dimensions are nominal

Device	Package Type	Package Drawing	Pins	SPQ	Length (mm)	Width (mm)	Height (mm)
ADS7253IPWR	TSSOP	PW	16	2000	367.0	367.0	35.0
ADS7253IPWRG4	TSSOP	PW	16	2000	367.0	367.0	35.0
ADS7253IRTER	WQFN	RTE	16	3000	367.0	367.0	35.0
ADS7253IRTET	WQFN	RTE	16	250	213.0	191.0	35.0
ADS7253IRTETG4	WQFN	RTE	16	250	213.0	191.0	35.0
ADS7853IPWR	TSSOP	PW	16	2000	367.0	367.0	35.0
ADS7853IRTER	WQFN	RTE	16	3000	367.0	367.0	35.0
ADS7853IRTERG4	WQFN	RTE	16	3000	367.0	367.0	35.0
ADS7853IRTET	WQFN	RTE	16	250	210.0	185.0	35.0
ADS8353IPWR	TSSOP	PW	16	2000	367.0	367.0	35.0
ADS8353IPWRG4	TSSOP	PW	16	2000	367.0	367.0	35.0
ADS8353IRTER	WQFN	RTE	16	3000	353.0	353.0	32.0
ADS8353IRTERG4	WQFN	RTE	16	3000	367.0	367.0	35.0
ADS8353IRTET	WQFN	RTE	16	250	213.0	191.0	35.0

TUBE

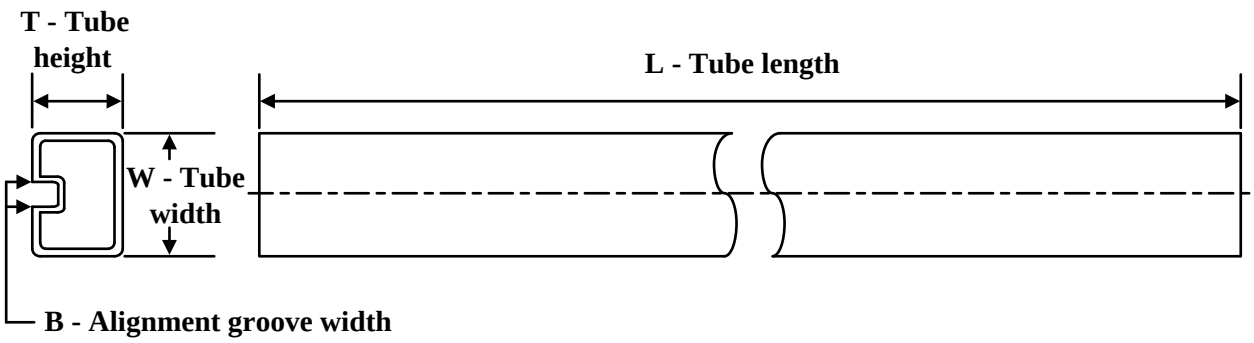

*All dimensions are nominal

Device	Package Name	Package Type	Pins	SPQ	L (mm)	W (mm)	T (µm)	B (mm)
ADS7253IPW	PW	TSSOP	16	90	530	10.2	3600	3.5
ADS7253IPW.A	PW	TSSOP	16	90	530	10.2	3600	3.5
ADS7253IPW.B	PW	TSSOP	16	90	530	10.2	3600	3.5
ADS7853IPW	PW	TSSOP	16	90	530	10.2	3600	3.5
ADS7853IPW.A	PW	TSSOP	16	90	530	10.2	3600	3.5
ADS7853IPW.B	PW	TSSOP	16	90	530	10.2	3600	3.5
ADS8353IPW	PW	TSSOP	16	90	530	10.2	3600	3.5
ADS8353IPW.A	PW	TSSOP	16	90	530	10.2	3600	3.5
ADS8353IPW.B	PW	TSSOP	16	90	530	10.2	3600	3.5

GENERIC PACKAGE VIEW

RTE 16

WQFN - 0.8 mm max height

3 x 3, 0.5 mm pitch

PLASTIC QUAD FLATPACK - NO LEAD

This image is a representation of the package family, actual package may vary.
Refer to the product data sheet for package details.

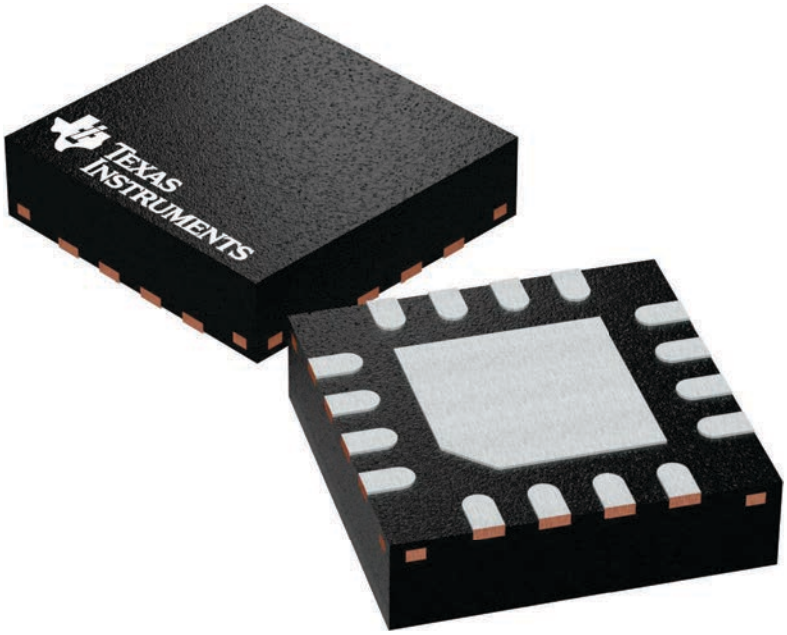

4225944/A

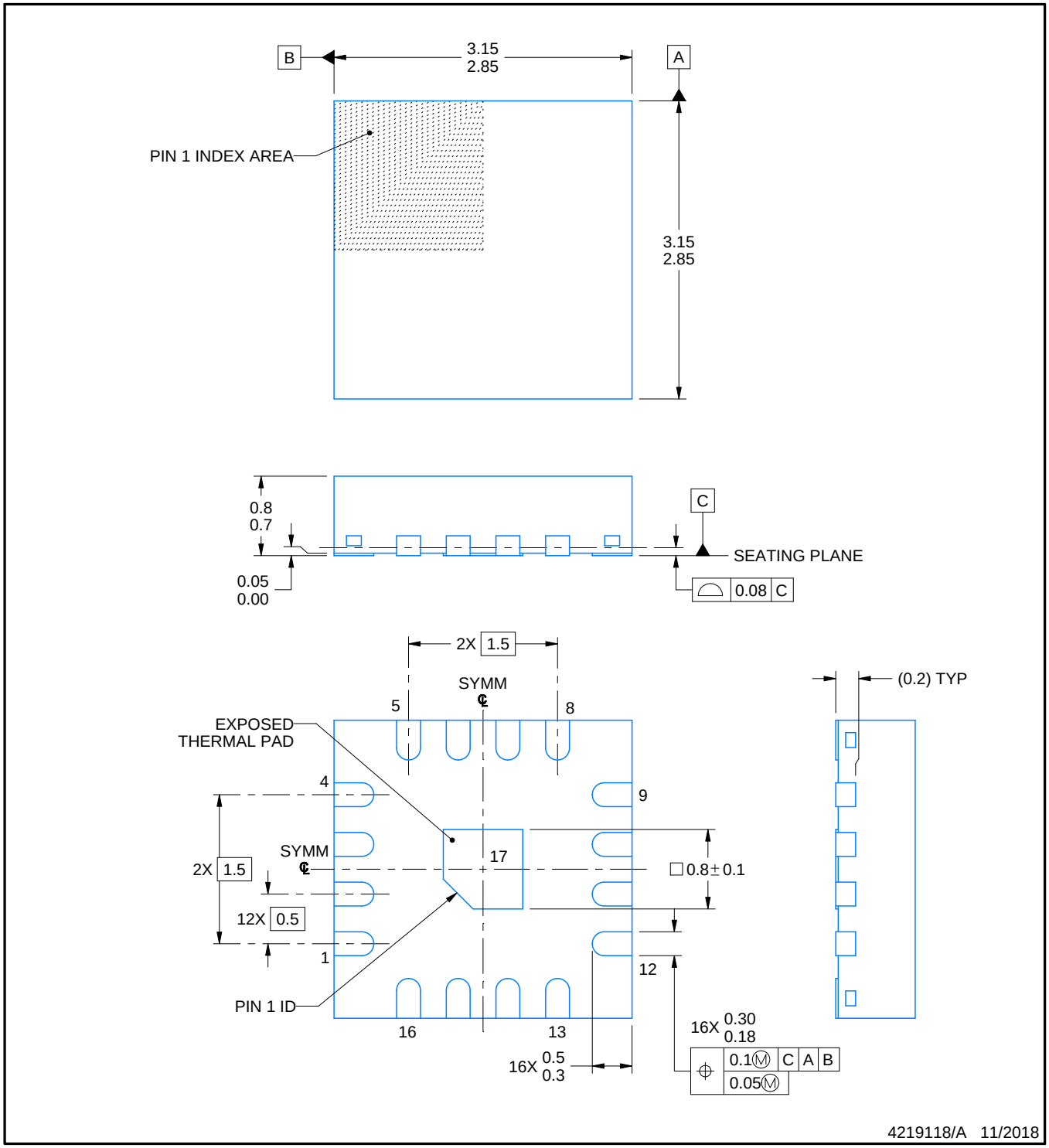

4219118/A 11/2018

NOTES:

1. All linear dimensions are in millimeters. Any dimensions in parenthesis are for reference only. Dimensioning and tolerancing per ASME Y14.5M.
2. This drawing is subject to change without notice.
3. The package thermal pad must be soldered to the printed circuit board for thermal and mechanical performance.

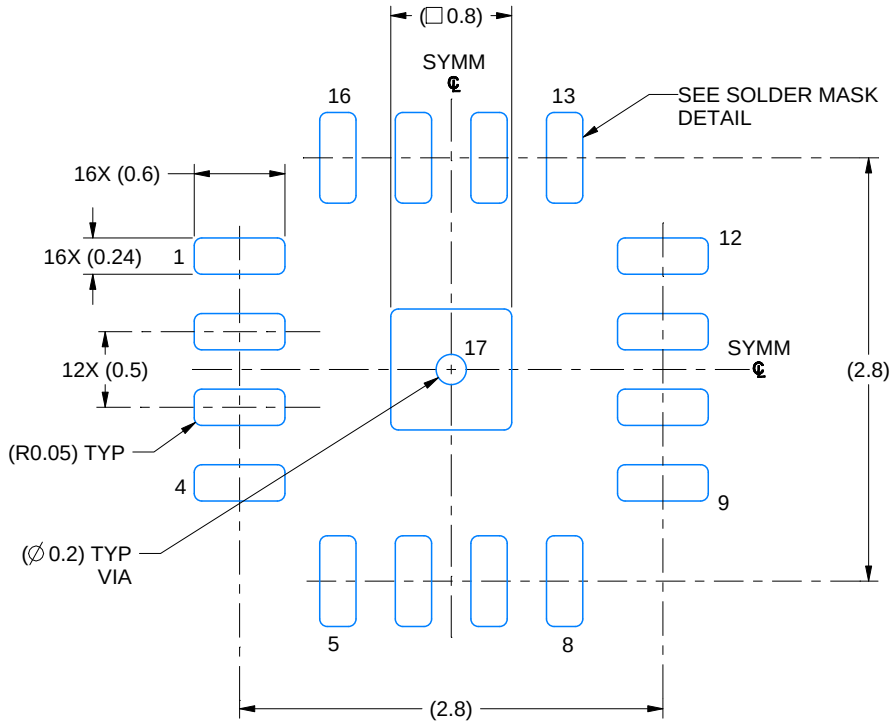

LAND PATTERN EXAMPLE
EXPOSED METAL SHOWN
SCALE: 20X

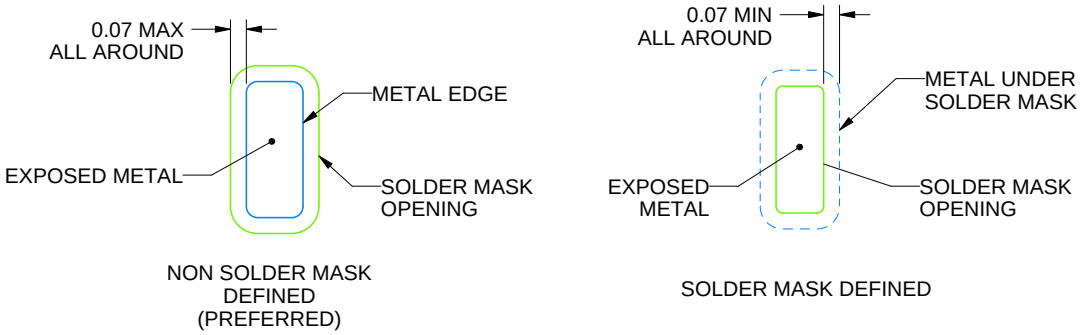

SOLDER MASK DETAILS

4219118/A 11/2018

NOTES: (continued)

4. This package is designed to be soldered to a thermal pad on the board. For more information, see Texas Instruments literature number SLUA271 (www.ti.com/lit/slua271).
5. Vias are optional depending on application, refer to device data sheet. If any vias are implemented, refer to their locations shown on this view. It is recommended that vias under paste be filled, plugged or tented.

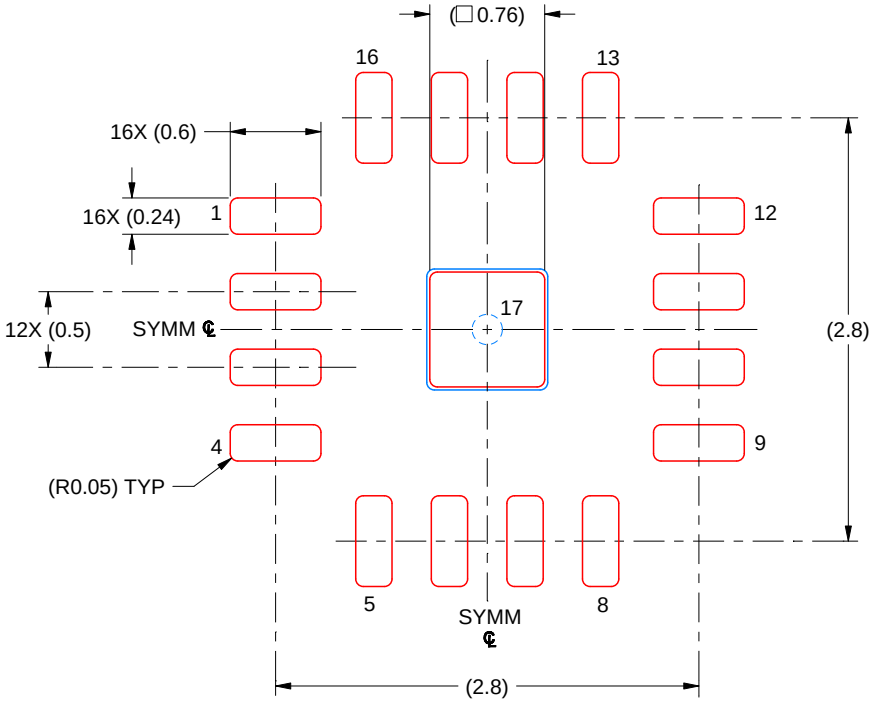

SOLDER PASTE EXAMPLE
BASED ON 0.125 MM THICK STENCIL
SCALE: 20X

EXPOSED PAD 17
90% PRINTED SOLDER COVERAGE BY AREA UNDER PACKAGE

4219118/A 11/2018

NOTES: (continued)

6. Laser cutting apertures with trapezoidal walls and rounded corners may offer better paste release. IPC-7525 may have alternate design recommendations.

PW0016A

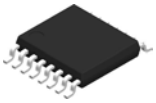

PACKAGE OUTLINE

TSSOP - 1.2 mm max height

SMALL OUTLINE PACKAGE

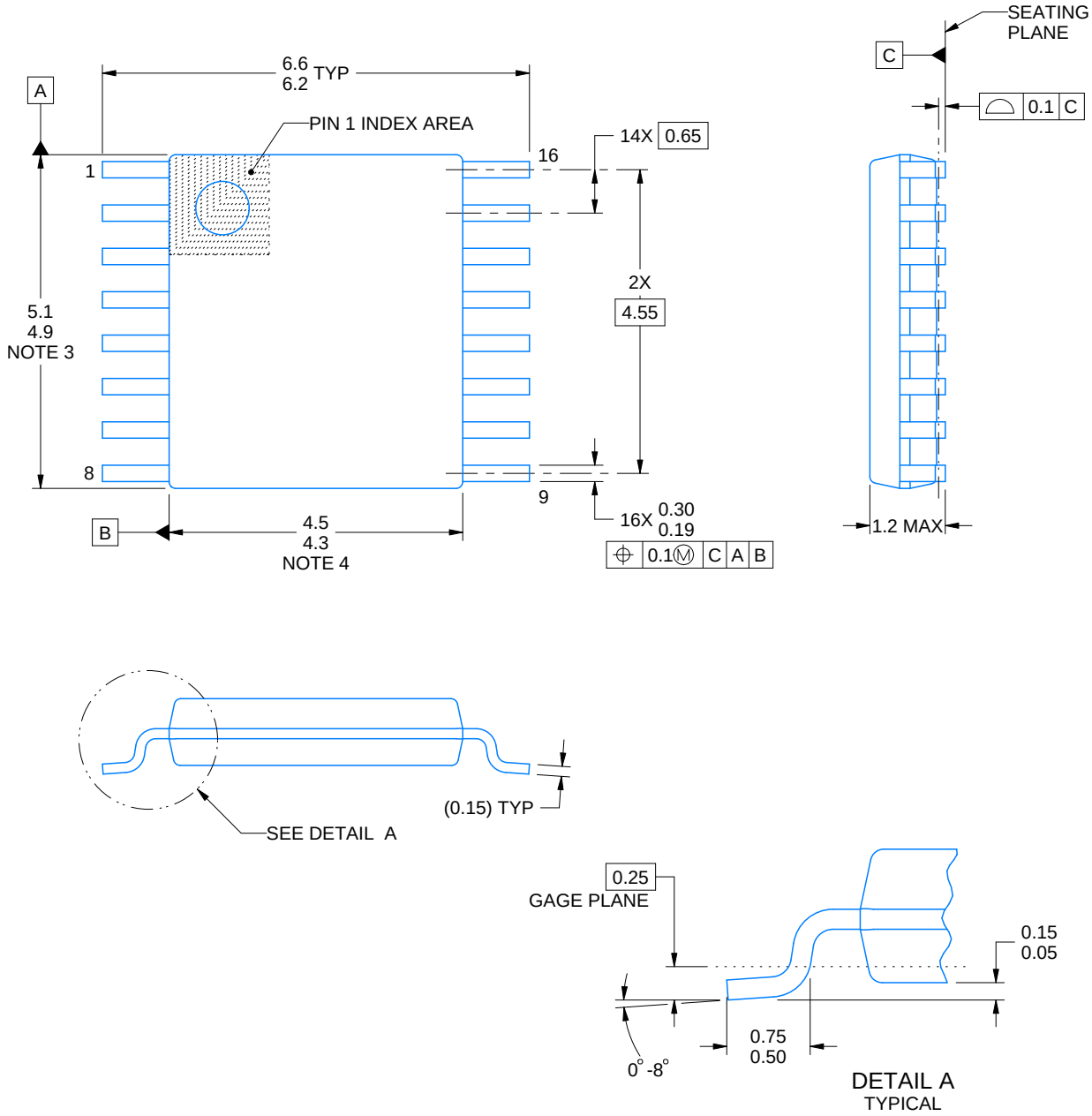

NOTES:

1. All linear dimensions are in millimeters. Any dimensions in parenthesis are for reference only. Dimensioning and tolerancing per ASME Y14.5M.
2. This drawing is subject to change without notice.
3. This dimension does not include mold flash, protrusions, or gate burrs. Mold flash, protrusions, or gate burrs shall not exceed 0.15 mm per side.
4. This dimension does not include interlead flash. Interlead flash shall not exceed 0.25 mm per side.
5. Reference JEDEC registration MO-153.

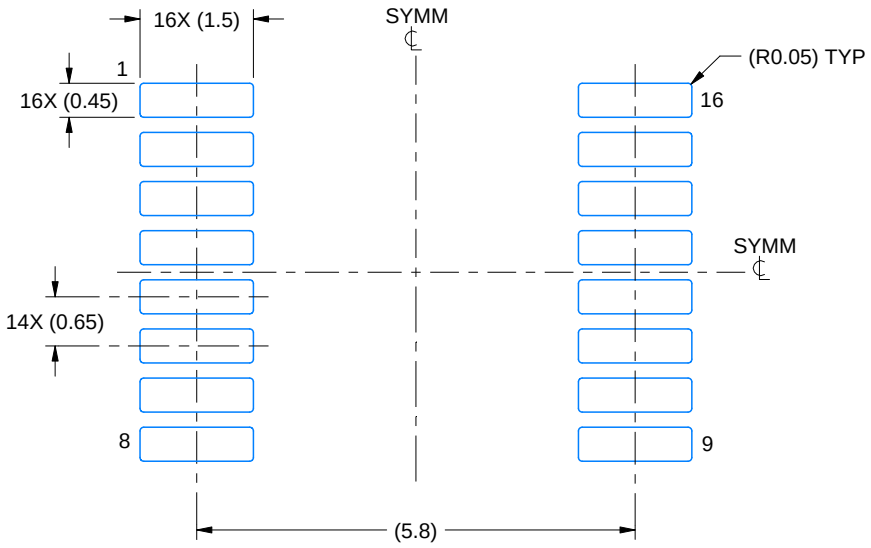

LAND PATTERN EXAMPLE
EXPOSED METAL SHOWN
SCALE: 10X

NON-SOLDER MASK DEFINED (PREFERRED)

SOLDER MASK DEFINED

SOLDER MASK DETAILS

4220204/A 02/2017

NOTES: (continued)

6. Publication IPC-7351 may have alternate designs.
7. Solder mask tolerances between and around signal pads can vary based on board fabrication site.

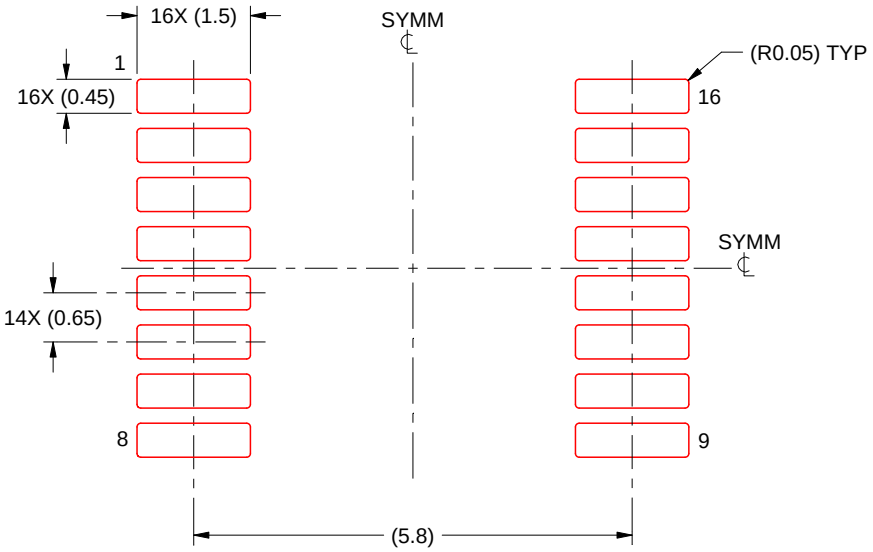

SOLDER PASTE EXAMPLE
BASED ON 0.125 mm THICK STENCIL
SCALE: 10X

4220204/A 02/2017

NOTES: (continued)

8. Laser cutting apertures with trapezoidal walls and rounded corners may offer better paste release. IPC-7525 may have alternate design recommendations.
9. Board assembly site may have different recommendations for stencil design.

IMPORTANT NOTICE AND DISCLAIMER

TI PROVIDES TECHNICAL AND RELIABILITY DATA (INCLUDING DATA SHEETS), DESIGN RESOURCES (INCLUDING REFERENCE DESIGNS), APPLICATION OR OTHER DESIGN ADVICE, WEB TOOLS, SAFETY INFORMATION, AND OTHER RESOURCES “AS IS” AND WITH ALL FAULTS, AND DISCLAIMS ALL WARRANTIES, EXPRESS AND IMPLIED, INCLUDING WITHOUT LIMITATION ANY IMPLIED WARRANTIES OF MERCHANTABILITY, FITNESS FOR A PARTICULAR PURPOSE OR NON-INFRINGEMENT OF THIRD PARTY INTELLECTUAL PROPERTY RIGHTS.

These resources are intended for skilled developers designing with TI products. You are solely responsible for (1) selecting the appropriate TI products for your application, (2) designing, validating and testing your application, and (3) ensuring your application meets applicable standards, and any other safety, security, regulatory or other requirements.

These resources are subject to change without notice. TI grants you permission to use these resources only for development of an application that uses the TI products described in the resource. Other reproduction and display of these resources is prohibited. No license is granted to any other TI intellectual property right or to any third party intellectual property right. TI disclaims responsibility for, and you will fully indemnify TI and its representatives against, any claims, damages, costs, losses, and liabilities arising out of your use of these resources.

TI’s products are provided subject to TI’s Terms of Sale or other applicable terms available either on ti.com or provided in conjunction with such TI products. TI’s provision of these resources does not expand or otherwise alter TI’s applicable warranties or warranty disclaimers for TI products.

TI objects to and rejects any additional or different terms you may have proposed.

Mailing Address: Texas Instruments, Post Office Box 655303, Dallas, Texas 75265
Copyright © 2025, Texas Instruments Incorporated