TLVx314
3-MHz, Low-Power, Internal EMI Filter, RRIO, Operational Amplifier

1 Features

- Low Offset Voltage: 0.75 mV (typ)
- Low Input Bias Current: 1 pA (typ)
- Wide Supply Range: 1.8 V to 5.5 V
- Rail-to-Rail Input and Output
- Gain Bandwidth: 3 MHz
- Low I_Q: 250 µA/Ch (max)
- Low Noise: 16 nV/√Hz at 1 kHz
- Internal RF/EMI Filter
- Extended Temperature Range: –40°C to +125°C

2 Applications

- White Goods
- Handheld Test Equipment
- Portable Blood Glucose Systems
- Remote Sensing
- Active Filters
- Industrial Automation
- Battery-Powered Electronics

EMIRR vs Frequency

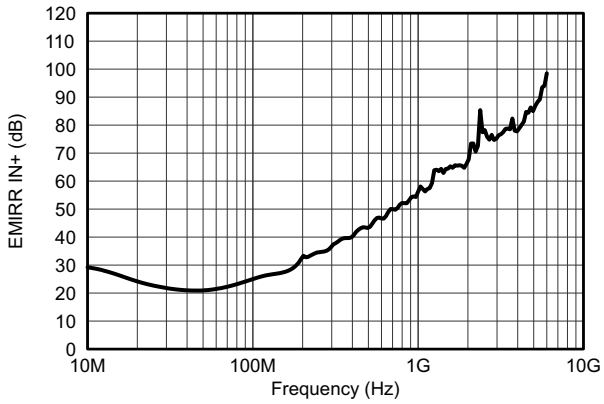

3 Description

The TLV314 family of single-, dual-, and quad-channel operational amplifiers represents a new generation of low-power, general-purpose operational amplifiers. Rail-to-rail input and output swings (RRIO), low quiescent current (150 µA typically at 5 V) combine with a wide bandwidth of 3 MHz to make this family very attractive for a variety of battery-powered applications that require a good balance between cost and performance. Additionally, the TLV314 family architecture achieves a low input bias current of 1 pA, allowing for applications with MΩ source impedances.

The robust design of the TLV314 devices provides ease-of-use to the circuit designer: unity-gain stability, RRIO, capacitive loads of up to 300 pF, an integrated RF/EMI rejection filter, no phase reversal in overdrive conditions, and high electrostatic discharge (ESD) protection (4-kV HBM).

These devices are optimized for low-voltage operation as low as 1.8 V (±0.9 V) and up to 5.5 V (±2.75 V), and are specified over the extended industrial temperature range of –40°C to +125°C.

The TLV314 (single) is available in both 5-pin SC70 and SOT-23 packages. The TLV2314 (dual) is offered in 8-pin SOIC and VSSOP packages. The quad-channel TLV4314 is offered in a 14-pin TSSOP package.

Device Information(1)

PART NUMBER	PACKAGE	BODY SIZE (NOM)
TLV314	SOT-23 (5)	2.90 mm × 1.60 mm
	SC70 (5)	2.00 mm × 1.25 mm
TLV2314	VSSOP (8)	3.00 mm × 3.00 mm
	SOIC (8)	4.90 mm × 3.91 mm
TLV4314	TSSOP (14)	5.00 mm × 4.40 mm

(1) For all available packages, see the orderable addendum at the end of the data sheet.

An IMPORTANT NOTICE at the end of this data sheet addresses availability, warranty, changes, use in safety-critical applications, intellectual property matters and other important disclaimers. PRODUCTION DATA.

Table of Contents

1 **Features** ... 1
2 **Applications** ... 1
3 **Description** ... 1
4 **Revision History** ... 2
5 **Device Comparison Table** ... 3
6 **Pin Configuration and Functions** ... 3
7 **Specifications** ... 6
7.1 Absolute Maximum Ratings ... 6
7.2 ESD Ratings ... 6
7.3 Recommended Operating Conditions ... 6
7.4 Thermal Information: TLV314 ... 7
7.5 Thermal Information: TLV2314 ... 7
7.6 Thermal Information: TLV4314 ... 7
7.7 Electrical Characteristics ... 8
7.8 Typical Characteristics ... 9
7.9 Typical Characteristics ... 10
8 **Detailed Description** ... 13
8.1 Overview ... 13
8.2 Functional Block Diagram ... 13
8.3 Feature Description ... 14
8.4 Device Functional Modes ... 15
9 **Application and Implementation** ... 16
9.1 Application Information ... 16
9.2 Typical Application ... 16
9.3 System Examples ... 17
10 **Power Supply Recommendations** ... 18
10.1 Input and ESD Protection ... 18
11 **Layout** ... 19
11.1 Layout Guidelines ... 19
11.2 Layout Example ... 19
12 **Device and Documentation Support** ... 20
12.1 Device Support ... 20
12.2 Documentation Support ... 20
12.3 Related Links ... 20
12.4 Community Resources ... 20
12.5 Trademarks ... 20
12.6 Electrostatic Discharge Caution ... 20
12.7 Glossary ... 20
13 **Mechanical, Packaging, and Orderable Information** ... 20

4 Revision History

NOTE: Page numbers for previous revisions may differ from page numbers in the current version.

Changes from Original (March 2016) to Revision A	Page
• Released to production	1

Copyright © 2016, Texas Instruments Incorporated

5 Device Comparison Table

DEVICE	NO. OF CHANNELS	PACKAGE-LEADS				
		SOT-23	SC70	SOIC	VSSOP	TSSOP
TLV314	1	5	5	—	—	—
TLV2314	2	—	—	8	8	—
TLV4314	4	—	—	—	—	14

6 Pin Configuration and Functions

DBV Package: TLV314
5-Pin SOT-23
Top View

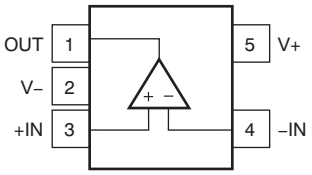

DCK Package: TLV314
5-Pin SC70
Top View

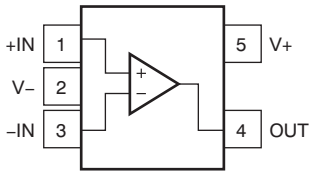

Pin Functions: TLV314

PIN			I/O	DESCRIPTION
NAME	NO.			
	DBV	DCK		
–IN	4	3	I	Inverting input
+IN	3	1	I	Noninverting input
OUT	1	4	O	Output
V–	2	2	—	Negative (lowest) supply
V+	5	5	—	Positive (highest) supply

D, DGK Package: TLV2314
8-Pin SOIC or VSSOP
Top View

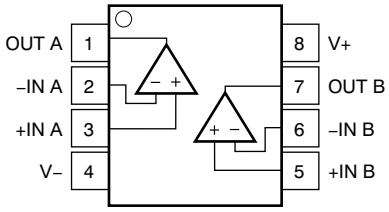

Pin Functions: TLV2314

PIN		I/O	DESCRIPTION
NAME	NO.		
–IN A	2	I	Inverting input, channel A
+IN A	3	I	Noninverting input, channel A
–IN B	6	I	Inverting input, channel B
+IN B	5	I	Noninverting input, channel B
OUT A	1	O	Output, channel A
OUT B	7	O	Output, channel B
V–	4	—	Negative (lowest) supply
V+	8	—	Positive (highest) supply

Copyright © 2016, Texas Instruments Incorporated

PW Package: TLV4314
14-Pin TSSOP
Top View

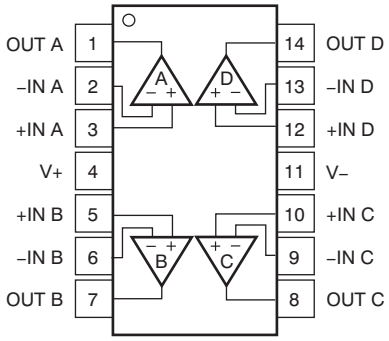

Pin Functions: TLV4314

PIN		I/O	DESCRIPTION
NAME	NO.		
–IN A	2	I	Inverting input, channel A
+IN A	3	I	Noninverting input, channel A
–IN B	6	I	Inverting input, channel B
+IN B	5	I	Noninverting input, channel B
–IN C	9	I	Inverting input, channel C
+IN C	10	I	Noninverting input, channel C
–IN D	13	I	Inverting input, channel D
+IN D	12	I	Noninverting input, channel D
OUT A	1	O	Output, channel A
OUT B	7	O	Output, channel B
OUT C	8	O	Output, channel C
OUT D	14	O	Output, channel D
V–	11	—	Negative (lowest) supply
V+	4	—	Positive (highest) supply

Copyright © 2016, Texas Instruments Incorporated

7 Specifications

7.1 Absolute Maximum Ratings

over operating free-air temperature range (unless otherwise noted)[1]

		MIN	MAX	UNIT
Supply voltage			7	V
Signal input pins	Voltage[2]	(V–) – 0.5	(V+) + 0.5	V
	Current[2]	–10	10	mA
Output short-circuit[3]		Continuous		mA
Temperature	Specified, T_A	–40	125	°C
	Junction, T_J		150	
	Storage, T_{stg}	–65	150	

(1) Stresses above these ratings may cause permanent damage. Exposure to absolute maximum conditions for extended periods may degrade device reliability. These are stress ratings only, and functional operation of the device at these or any other conditions beyond those specified is not supported.
(2) Input pins are diode-clamped to the power-supply rails. Input signals that can swing more than 0.5 V beyond the supply rails must be current limited to 10 mA or less.
(3) Short-circuit to ground, one amplifier per package.

7.2 ESD Ratings

			VALUE	UNIT
$V_{(ESD)}$	Electrostatic discharge	Human-body model (HBM), per ANSI/ESDA/JEDEC JS-001[1]	±4000	V
		Charged-device model (CDM), per JEDEC specification JESD22-C101[2]	±1000	

(1) JEDEC document JEP155 states that 500-V HBM allows safe manufacturing with a standard ESD control process.
(2) JEDEC document JEP157 states that 250-V CDM allows safe manufacturing with a standard ESD control process.

7.3 Recommended Operating Conditions

over operating free-air temperature range (unless otherwise noted)

			MIN	NOM	MAX	UNIT
V_S	Supply voltage	Single supply	1.8		5.5	V
		Dual supply	±0.9		±2.75	
	Specified temperature range		–40		125	°C

Copyright © 2016, Texas Instruments Incorporated

7.4 Thermal Information: TLV314

THERMAL METRIC[1]		TLV314		UNIT
		DBV (SOT-23)	DCK (SC70)	
		5 PINS	5 PINS	
$R_{\theta JA}$	Junction-to-ambient thermal resistance	228.5	281.4	°C/W
$R_{\theta JC(top)}$	Junction-to-case(top) thermal resistance	99.1	91.6	°C/W
$R_{\theta JB}$	Junction-to-board thermal resistance	54.6	59.6	°C/W
ψ_{JT}	Junction-to-top characterization parameter	7.7	1.5	°C/W
ψ_{JB}	Junction-to-board characterization parameter	53.8	58.8	°C/W

(1) For more information about traditional and new thermal metrics, see the *Semiconductor and IC Package Thermal Metrics* application report, SPRA953.

7.5 Thermal Information: TLV2314

THERMAL METRIC[1]		TLV2314		UNIT
		D (SOIC)	DGK (VSSOP)	
		8 PINS	8 PINS	
$R_{\theta JA}$	Junction-to-ambient thermal resistance	138.4	191.2	°C/W
$R_{\theta JC(top)}$	Junction-to-case(top) thermal resistance	89.5	61.9	°C/W
$R_{\theta JB}$	Junction-to-board thermal resistance	78.6	111.9	°C/W
ψ_{JT}	Junction-to-top characterization parameter	29.9	5.1	°C/W
ψ_{JB}	Junction-to-board characterization parameter	78.1	110.2	°C/W

(1) For more information about traditional and new thermal metrics, see the *Semiconductor and IC Package Thermal Metrics* application report, SPRA953.

7.6 Thermal Information: TLV4314

THERMAL METRIC[1]		TLV4314		UNIT
		D (SOIC)	PW (TSSOP)	
		14 PINS	14 PINS	
$R_{\theta JA}$	Junction-to-ambient thermal resistance	93.2	121	°C/W
$R_{\theta JC(top)}$	Junction-to-case(top) thermal resistance	51.8	49.4	°C/W
$R_{\theta JB}$	Junction-to-board thermal resistance	49.4	62.8	°C/W
ψ_{JT}	Junction-to-top characterization parameter	13.5	5.9	°C/W
ψ_{JB}	Junction-to-board characterization parameter	42.2	62.2	°C/W

(1) For more information about traditional and new thermal metrics, see the *Semiconductor and IC Package Thermal Metrics* application report, SPRA953.

Copyright © 2016, Texas Instruments Incorporated

7.7 Electrical Characteristics

V_S = 1.8 V to 5.5 V; at T_A = 25°C, R_L = 10 kΩ connected to V_S / 2, V_{CM} = V_S / 2, and V_{OUT} = V_S / 2 (unless otherwise noted)(1)

PARAMETER			TEST CONDITIONS	MIN	TYP	MAX	UNIT
OFFSET VOLTAGE							
V_{OS}	Input offset voltage		V_{CM} = (V_S+) – 1.3 V, T_A = 25°C		±0.75	±3	mV
dV_{OS}/dT	V_{OS} vs temperature		T_A = –40°C to +125°C		2		µV/°C
PSRR	Power-supply rejection ratio		V_{CM} = (V_S+) – 1.3 V, T_A = 25°C		±30	±135	µV/V
	Channel separation, dc		At dc, T_A = 25°C		100		dB
INPUT VOLTAGE RANGE							
V_{CM}	Common-mode voltage range		T_A = 25°C	(V–) – 0.2		(V+) + 0.2	V
CMRR	Common-mode rejection ratio		V_S = 5.5 V, (V_S–) – 0.2 V < V_{CM} < (V_S+) – 1.3 V, T_A = 25°C	72	96		dB
			V_S = 5.5 V, V_{CM} = –0.2 V to 5.7 V(2), T_A = 25°C		75		
INPUT BIAS CURRENT							
I_B	Input bias current		T_A = 25°C		±1.0		pA
I_{OS}	Input offset current		T_A = 25°C		±1.0		pA
NOISE							
	Input voltage noise (peak-to-peak)		f = 0.1 Hz to 10 Hz, T_A = 25°C		5		$µV_{PP}$
e_n	Input voltage noise density		f = 10 kHz, T_A = 25°C		15		nV/√Hz
			f = 1 kHz, T_A = 25°C		16		
i_n	Input current noise density		f = 1 kHz, T_A = 25°C		6		fA/√Hz
INPUT CAPACITANCE							
C_{IN}	Input capacitance	Differential	V_S = 5 V, T_A = 25°C		1		pF
		Common-mode	V_S = 5 V, T_A = 25°C		5		
OPEN-LOOP GAIN							
A_{OL}	Open-loop voltage gain		V_S = 1.8 V to 5.5 V, 0.2 V < V_O < (V+) – 0.2 V, R_L = 10 kΩ, T_A = 25°C	85	115		dB
			V_S = 1.8 V to 5.5 V, 0.5 V < V_O < (V+) – 0.5 V, R_L = 2 kΩ(2), T_A = 25°C	85	100		
	Phase margin		V_S = 5 V, G = 1, R_L = 10 kΩ, T_A = 25°C		65		°
FREQUENCY RESPONSE							
GBW	Gain-bandwidth product		V_S = 1.8 V, R_L = 10 kΩ, C_L = 10 pF, T_A = 25°C		2.7		MHz
			V_S = 5 V, R_L = 10 kΩ, C_L = 10 pF, T_A = 25°C		3		
SR	Slew rate(3)		V_S = 5 V, G = 1, T_A = 25°C		1.5		V/µs
t_S	Settling time		To 0.1%, V_S = 5 V, 2-V step , G = 1, T_A = 25°C		3		µs
	Overload recovery time		V_S = 5 V, V_{IN} × gain > V_S, T_A = 25°C		8		µs
THD+N	Total harmonic distortion + noise(4)		V_S = 5 V, V_O = 1 V_{RMS}, G = 1, f = 1 kHz, R_L = 10 kΩ, T_A = 25°C		0.005%		
OUTPUT							
V_O	Voltage output swing from supply rails		V_S = 1.8 V to 5.5 V, R_L = 10 kΩ, T_A = 25°C		5	25	mV
			V_S = 1.8 V to 5.5 V, R_L = 2 kΩ, T_A = 25°C		22	45	
I_{SC}	Short-circuit current		V_S = 5 V, T_A = 25°C		±20		mA
R_O	Open-loop output impedance		V_S = 5.5 V, f = 100 Hz, T_A = 25°C		570		Ω
POWER SUPPLY							
V_S	Specified voltage range			1.8		5.5	V
I_Q	Quiescent current per amplifier, over temperature		V_S = 5 V, I_O = 0 mA, T_A = –40°C to +125°C		150	250	µA
TEMPERATURE							
	Specified range			–40		125	°C
T_{stg}	Storage range			–65		150	°C

(1) Parameters with minimum or maximum specification limits are 100% production tested at 25ºC, unless otherwise noted. Over-temperature limits are based on characterization and statistical analysis.
(2) Specified by design and characterization; not production tested.
(3) Signifies the slower value of the positive or negative slew rate.
(4) Third-order filter; bandwidth = 80 kHz at –3 dB.

Copyright © 2016, Texas Instruments Incorporated

7.8 Typical Characteristics

Table 1. Table of Graphs

TITLE	FIGURE
Open-Loop Gain and Phase vs Frequency	Figure 1
Quiescent Current vs Supply Voltage	Figure 2
Offset Voltage Production Distribution	Figure 3
Offset Voltage vs Common-Mode Voltage (Maximum Supply)	Figure 4
Input Voltage Noise Spectral Density vs Frequency (1.8 V, 5.5 V)	Figure 5
Input Bias and Offset Current vs Temperature	Figure 6
Output Voltage Swing vs Output Current (over Temperature)	Figure 7
Small-Signal Overshoot vs Load Capacitance	Figure 8
Small-Signal Step Response, Noninverting (1.8 V)	Figure 9
Large-Signal Step Response, Noninverting (1.8 V)	Figure 10
No Phase Reversal	Figure 11
Channel Separation vs Frequency (Dual)	Figure 12
EMIRR	Figure 13

Copyright © 2016, Texas Instruments Incorporated

7.9 Typical Characteristics

at T_A = 25°C, R_L = 10 kΩ connected to V_S / 2, V_{CM} = V_S / 2, and V_{OUT} = V_S / 2 (unless otherwise noted)

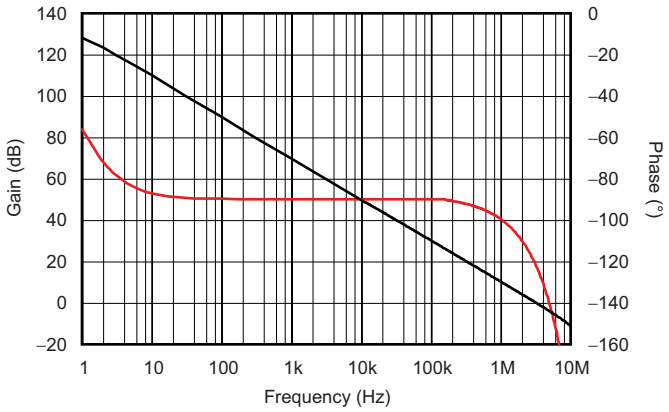

R_L = 10 kΩ and 10 pF, V_S = ±2.5 V

Figure 1. Open-Loop Gain and Phase vs Frequency

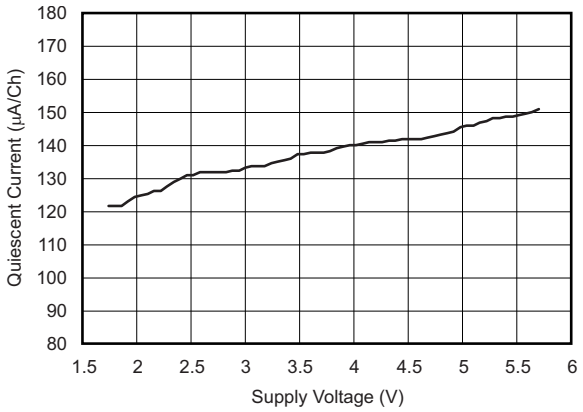

Figure 2. Quiescent Current vs Supply

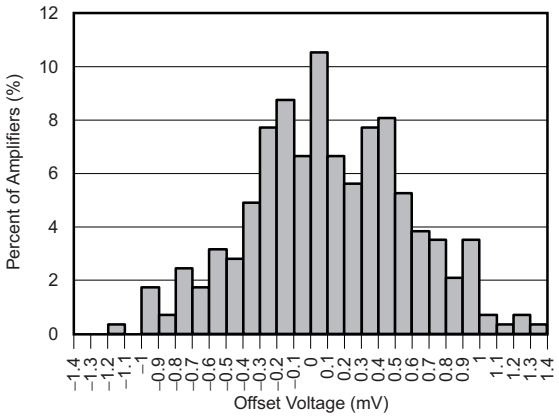

Figure 3. Offset Voltage Production Distribution

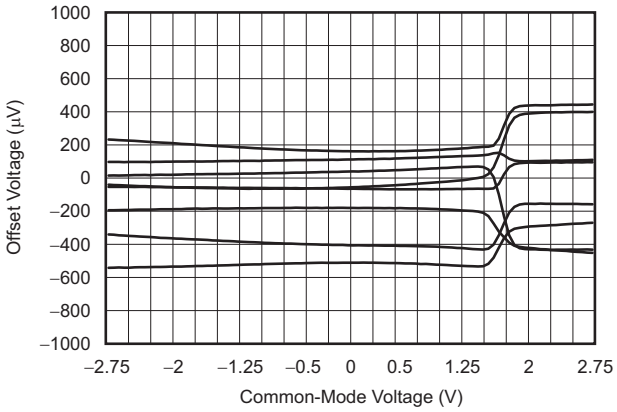

Typical units, V_S = ±2.75 V

Figure 4. Offset Voltage vs Common-Mode Voltage

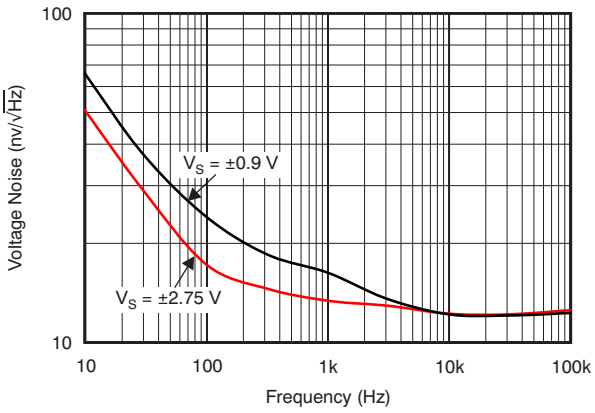

Figure 5. Input Voltage Noise Spectral Density vs Frequency

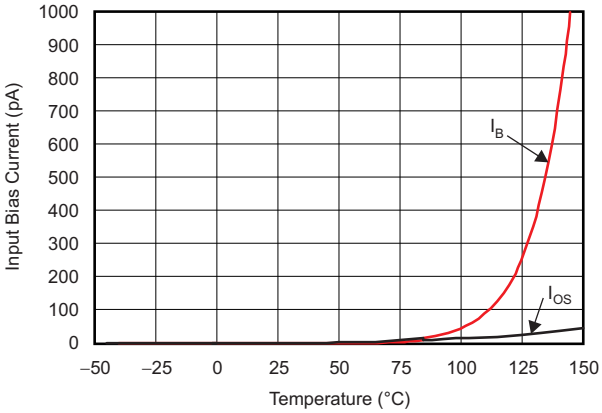

Figure 6. Input Bias and Offset Current vs Temperature

Copyright © 2016, Texas Instruments Incorporated

Typical Characteristics (continued)

at T_A = 25°C, R_L = 10 kΩ connected to V_S / 2, V_{CM} = V_S / 2, and V_{OUT} = V_S / 2 (unless otherwise noted)

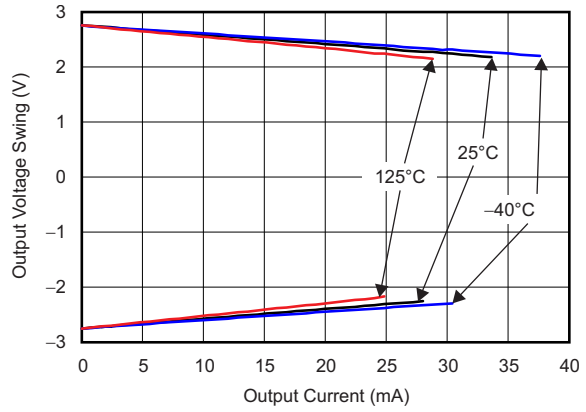

V_S = ±2.75 V

Figure 7. Output Voltage Swing vs Output Current (Over Temperature)

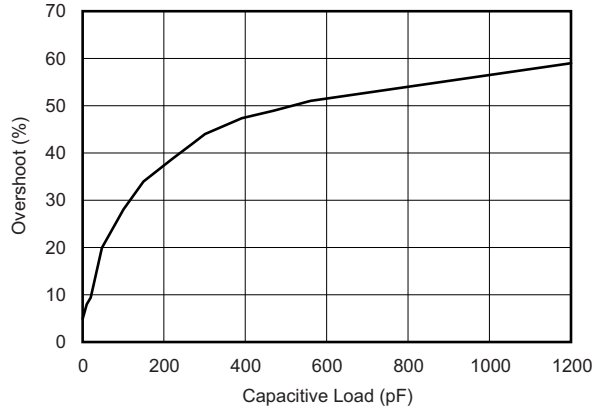

V_S = ±2.75 V, gain = 1 V/V, R_L = 10 kΩ

Figure 8. Small-Signal Overshoot vs Load Capacitance

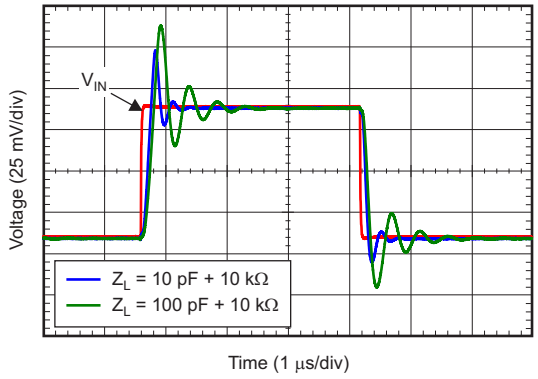

V_S = ±0.9 V, gain = 1 V/V, R_F = 10 kΩ

Figure 9. Small-Signal Pulse Response (Noninverting)

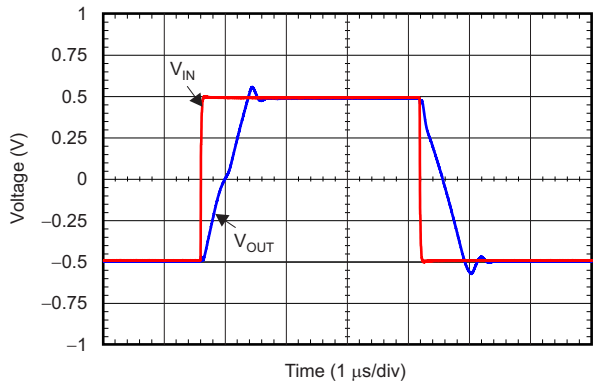

V_S = ±0.9 V, gain = 1 V/V, R_L = 10 kΩ

Figure 10. Large-Signal Pulse Response (Noninverting)

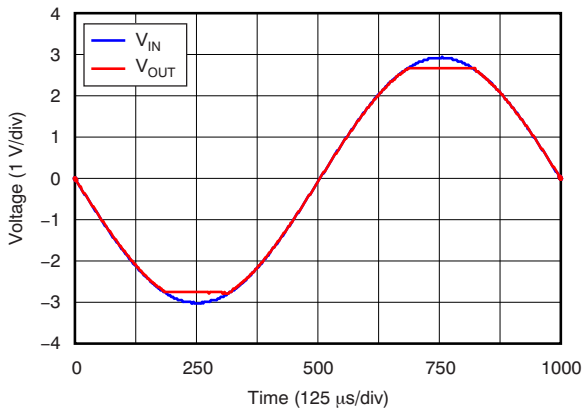

Figure 11. No Phase Reversal

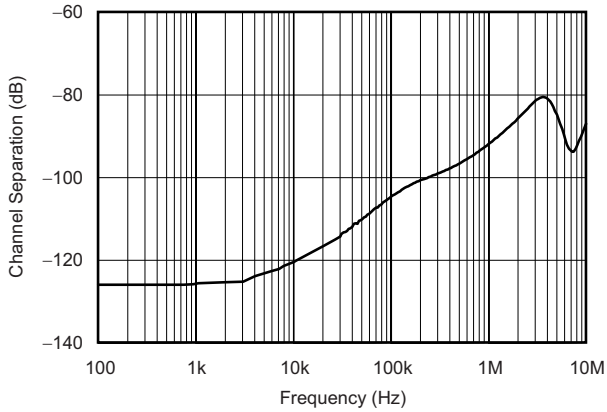

V_S = ±2.75 V

Figure 12. Channel Separation vs Frequency (TLV2314)

Typical Characteristics (continued)

at T_A = 25°C, R_L = 10 kΩ connected to V_S / 2, V_{CM} = V_S / 2, and V_{OUT} = V_S / 2 (unless otherwise noted)

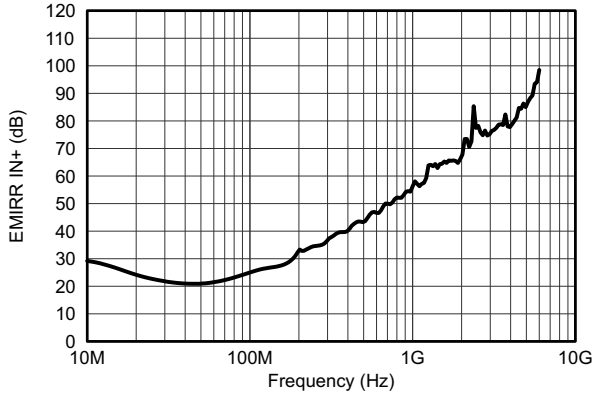

P_{RF} = –10 dBm, V_S = ±2.5 V, V_{CM} = 0 V

Figure 13. Electromagnetic Interference Rejection Ratio Referred to Noninverting Input (EMIRR IN+) vs Frequency

Copyright © 2016, Texas Instruments Incorporated

8 Detailed Description

8.1 Overview

The TLV314 is a family of low-power, rail-to-rail input and output operational amplifiers specifically designed for portable applications. These devices operate from 1.8 V to 5.5 V, are unity-gain stable, and suitable for a wide range of general-purpose applications. The class AB output stage is capable of driving ≤ 10-kΩ loads connected to any point between V+ and ground. The input common-mode voltage range includes both rails, and allows the TLV314 series to be used in virtually any single-supply application. Rail-to-rail input and output swing significantly increases dynamic range, especially in low-supply applications, and makes these devices ideal for driving sampling analog-to-digital converters (ADCs).

The TLV314 features 3-MHz bandwidth and 1.5-V/µs slew rate with only 150-µA supply current per channel, providing good ac performance at very low power consumption. DC applications are also well served with a very low input noise voltage of 14 nV/√Hz at 1 kHz, low input bias current (0.2 pA), and an input offset voltage of 0.5 mV (typical).

8.2 Functional Block Diagram

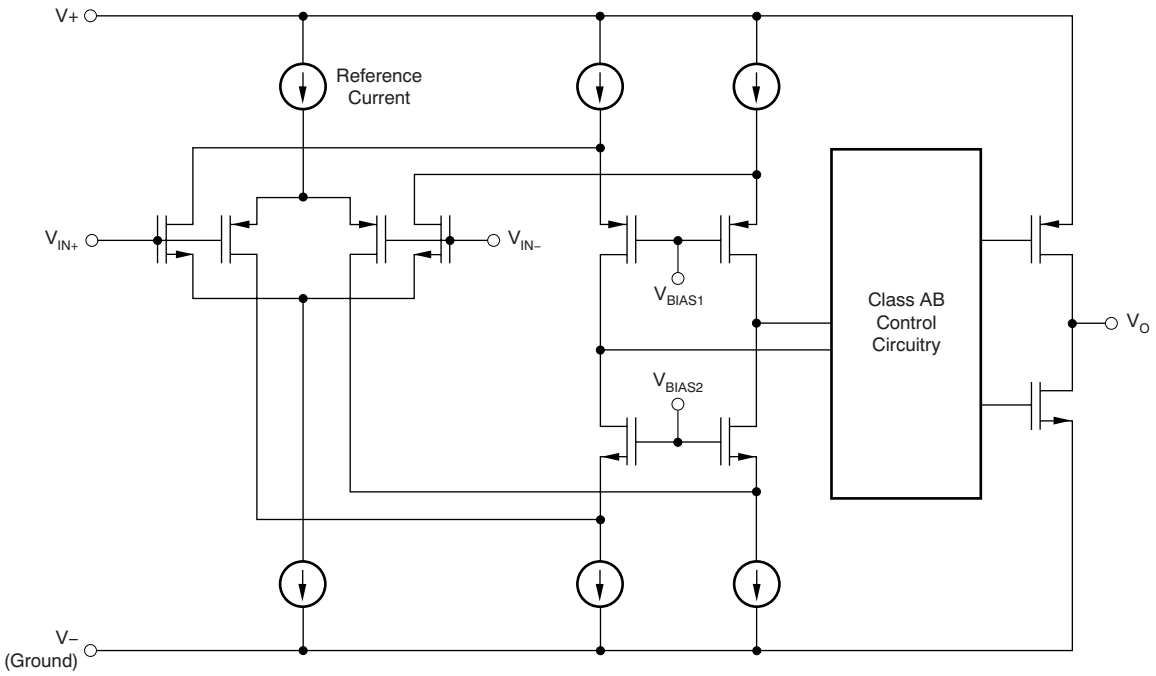

8.3 Feature Description

8.3.1 Operating Voltage

The TLV314 series of operational amplifiers is fully specified and ensured for operation from 1.8 V to 5.5 V. In addition, many specifications apply from –40°C to +125°C. Parameters that vary significantly with operating voltages or temperature are provided in the *Typical Characteristics* section. Bypass power-supply pins with 0.01-µF ceramic capacitors.

8.3.2 Rail-to-Rail Input

The input common-mode voltage range of the TLV314 series extends 200 mV beyond the supply rails. This performance is achieved with a complementary input stage: an N-channel input differential pair in parallel with a P-channel differential pair; see the *Functional Block Diagram* section. The N-channel pair is active for input voltages close to the positive rail, typically (V+) – 1.3 V to 200 mV above the positive supply, and the P-channel pair is on for inputs from 200 mV below the negative supply to approximately (V+) – 1.3 V. There is a small transition region, typically (V+) – 1.4 V to (V+) – 1.2 V, in which both pairs are on. This 200-mV transition region can vary up to 300 mV with process variation. Thus, the transition region (both stages on) can range from (V+) – 1.7 V to (V+) – 1.5 V on the low end, up to (V+) – 1.1 V to (V+) – 0.9 V on the high end. Within this transition region, PSRR, CMRR, offset voltage, offset drift, and THD can be degraded compared to device operation outside this region.

8.3.3 Rail-to-Rail Output

Designed as a micro-power, low-noise operational amplifier, the TLV314 delivers a robust output drive capability. A class AB output stage with common-source transistors is used to achieve full rail-to-rail output swing capability. For resistive loads up to 10 kΩ, the output typically swings to within 5 mV of either supply rail regardless of the power-supply voltage applied. Different load conditions change the ability of the amplifier to swing close to the rails; see Figure 7.

8.3.4 Common-Mode Rejection Ratio (CMRR)

The CMRR for the TLV314 is specified in several ways so the best match for a given application can be used; see the *Electrical Characteristics* table. First, the CMRR of the device in the common-mode range below the transition region [V_{CM} < (V+) – 1.3 V] is given. This specification is the best indicator of the capability of the device when the application requires using one of the differential input pairs. Second, the CMRR over the entire common-mode range is specified at (V_{CM} = –0.2 V to 5.7 V). This last value includes the variations measured through the transition region (see Figure 4).

Copyright © 2016, Texas Instruments Incorporated

Feature Description (continued)

8.3.5 Capacitive Load and Stability

The TLV314 is designed to be used in applications where driving a capacitive load is required. As with all operational amplifiers, there may be specific instances where the TLV314 can become unstable. The particular operational amplifier circuit configuration, layout, gain, and output loading are some of the factors to consider when establishing whether or not an amplifier is stable in operation. An operational amplifier in the unity-gain (1 V/V) buffer configuration that drives a capacitive load exhibits a greater tendency to be unstable than an amplifier operated at a higher noise gain. The capacitive load, in conjunction with the operational amplifier output resistance, creates a pole within the feedback loop that degrades the phase margin. The degradation of the phase margin increases when capacitive loading increases. When operating in the unity-gain configuration, the TLV314 remains stable with a pure capacitive load up to approximately 1 nF. The equivalent series resistance (ESR) of some very large capacitors (C_L greater than 1 µF) is sufficient to alter the phase characteristics in the feedback loop such that the amplifier remains stable. Increasing the amplifier closed-loop gain allows the amplifier to drive increasingly larger capacitance. This increased capability is evident when measuring the overshoot response of the amplifier at higher voltage gains; see Figure 8.

One technique for increasing the capacitive load drive capability of the amplifier operating in a unity-gain configuration is to insert a small resistor (typically 10 Ω to 20 Ω) in series with the output, as shown in Figure 14. This resistor significantly reduces the overshoot and ringing associated with large capacitive loads. One possible problem with this technique, however, is that a voltage divider is created with the added series resistor and any resistor connected in parallel with the capacitive load. The voltage divider introduces a gain error at the output that reduces the output swing.

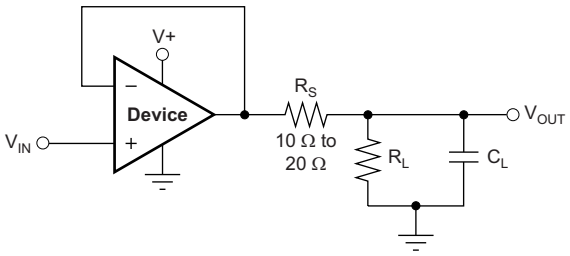

Figure 14. Improving Capacitive Load Drive

8.3.6 EMI Susceptibility and Input Filtering

Operational amplifiers vary with regard to the susceptibility of the device to electromagnetic interference (EMI). If conducted EMI enters the operational amplifier, the dc offset observed at the amplifier output can shift from its nominal value when EMI is present. This shift is a result of signal rectification associated with the internal semiconductor junctions. Although all operational amplifier pin functions can be affected by EMI, the signal input pins are likely to be the most susceptible. The TLV314 operational amplifier family incorporates an internal input low-pass filter that reduces the amplifiers response to EMI. Both common-mode and differential mode filtering are provided by this filter. The filter is designed for a cutoff frequency of approximately 80 MHz (–3 dB), with a roll-off of 20 dB per decade.

Texas Instruments has developed the ability to accurately measure and quantify the immunity of an operational amplifier over a broad frequency spectrum extending from 10 MHz to 6 GHz. The EMI rejection ratio (EMIRR) metric allows operational amplifiers to be directly compared by the EMI immunity. Figure 13 illustrates the results of this testing on the TLV314. Detailed information can also be found in application report, *EMI Rejection Ratio of Operational Amplifiers* (SBOA128), available for download from www.ti.com.

8.4 Device Functional Modes

The TLV314 family has a single functional mode. These devices are powered on as long as the power-supply voltage is between 1.8 V (±0.9 V) and 5.5 V (±2.75 V).

9 Application and Implementation

NOTE

Information in the following applications sections is not part of the TI component specification, and TI does not warrant its accuracy or completeness. TI's customers are responsible for determining suitability of components for their purposes. Customers should validate and test their design implementation to confirm system functionality.

9.1 Application Information

The TLV314 device is a low-power, rail-to-rail input and output operational amplifier specifically designed for portable applications. These devices operate from 1.8 V to 5.5 V, are unity-gain stable, and suitable for a wide range of general-purpose applications. The class AB output stage is capable of driving ≤ 10-kΩ loads connected to any point between V+ and ground. The input common-mode voltage range includes both rails, and allows the TLV314 device to be used in virtually any single-supply application. Rail-to-rail input and output swing significantly increases dynamic range, especially in low-supply applications, and makes the device ideal for driving sampling analog-to-digital converters (ADCs).

The TLV314 family of devices features a 3-MHz bandwidth and 1.5-V/µs slew rate with only 150-µA supply current per channel, providing good ac performance at very low power consumption. DC applications are also well served with a very-low input noise voltage of 14 nV/√Hz at 1 kHz, low-input bias current (0.2 pA), and an input offset voltage of 0.5 mV (typical).

9.2 Typical Application

A typical application for an operational amplifier is an inverting amplifier, as shown in Figure 15. An inverting amplifier takes a positive voltage on the input and outputs a signal inverted to the input, making a negative voltage of the same magnitude. In the same manner, the amplifier also makes negative input voltages positive on the output. In addition, amplification can be added by selecting the input resistor R_I and the feedback resistor R_F.

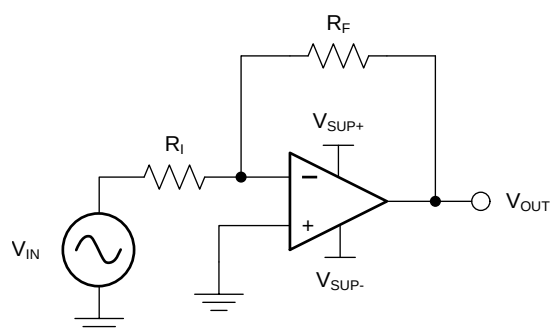

Figure 15. Application Schematic

9.2.1 Design Requirements

The supply voltage must be chosen to be larger than the input voltage range and the desired output range. The limits of the input common-mode range (V_{CM}) and the output voltage swing to the rails (V_O) must also be considered. For instance, this application scales a signal of ±0.5 V (1 V) to ±1.8 V (3.6 V). Setting the supply at ±2.5 V is sufficient to accommodate this application.

9.2.2 Detailed Design Procedure

Determine the gain required by the inverting amplifier using Equation 1 and Equation 2:

$$A_V = \frac{V_{OUT}}{V_{IN}} \tag{1}$$

$$A_V = \frac{1.8}{-0.5} = -3.6 \tag{2}$$

Copyright © 2016, Texas Instruments Incorporated

Typical Application (continued)

When the desired gain is determined, choose a value for R_I or R_F. Choosing a value in the kilo ohm range is desirable for general-purpose applications because the amplifier circuit uses currents in the milliamp range. This milliamp current range ensures the device does not draw too much current. The trade-off is that very large resistors (100s of kilo ohms) draw the smallest current but generate the highest noise. Very small resistors (100s of ohms) generate low noise but draw high current. This example uses 10 kΩ for R_I, meaning 36 kΩ is used for R_F. These values are determined by Equation 3:

$$A_V = -\frac{R_F}{R_I} \tag{3}$$

9.2.3 Application Curve

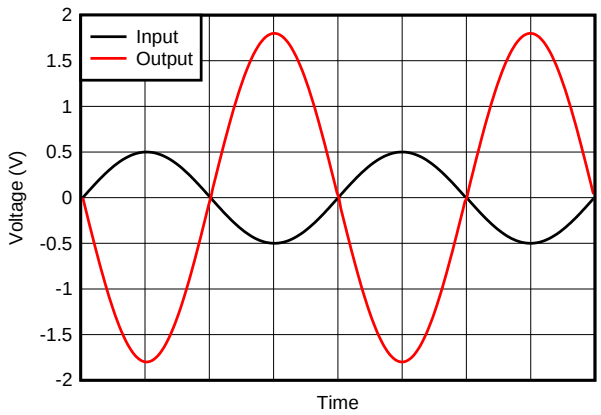

Figure 16. Inverting Amplifier Input and Output

9.3 System Examples

When receiving low-level signals, limiting the bandwidth of the incoming signals into the system is often required. The simplest way to establish this limited bandwidth is to place an RC filter at the noninverting terminal of the amplifier, as Figure 17 shows.

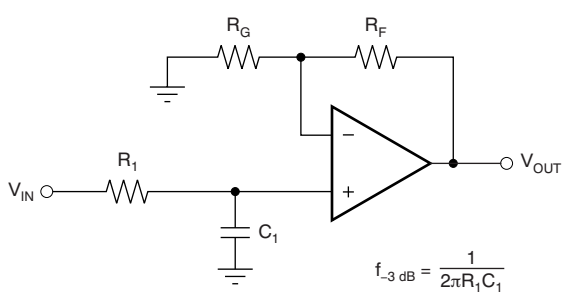

$$\frac{V_{OUT}}{V_{IN}} = \left(1 + \frac{R_F}{R_G}\right)\left(\frac{1}{1 + sR_1C_1}\right)$$

Figure 17. Single-Pole, Low-Pass Filter

System Examples (continued)

If even more attenuation is needed, a multiple pole filter is required. The Sallen-Key filter can be used for this task, as Figure 18 shows. For best results, the amplifier must have a bandwidth that is eight to ten times the filter frequency bandwidth. Failure to follow this guideline can result in phase shift of the amplifier.

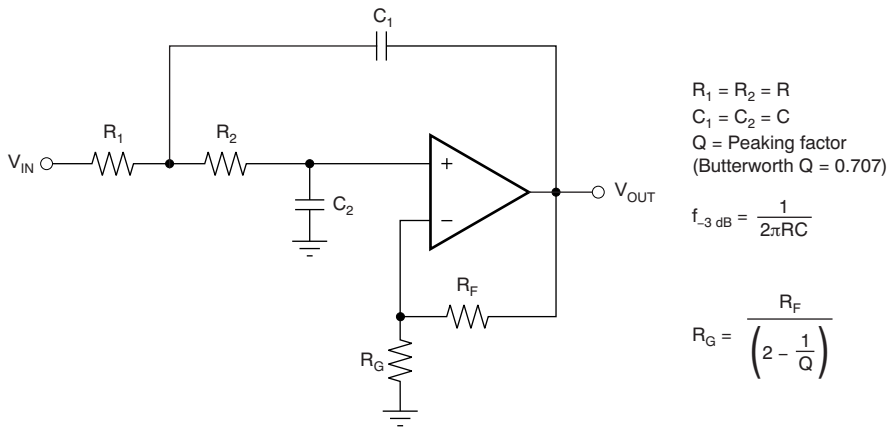

Figure 18. Two-Pole, Low-Pass, Sallen-Key Filter

10 Power Supply Recommendations

The TLV314 family is specified for operation from 1.8 V to 5.5 V (±0.9 V to ±2.75 V); many specifications apply from –40°C to +125°C. The *Typical Characteristics* section presents parameters that can exhibit significant variance with regard to operating voltage or temperature.

CAUTION

Supply voltages larger than 7 V can permanently damage the device (see the *Absolute Maximum Ratings* table).

Place 0.1-µF bypass capacitors close to the power-supply pins to reduce errors coupling in from noisy or high-impedance power supplies. For more detailed information on bypass capacitor placement; see the *Layout Guidelines* section.

10.1 Input and ESD Protection

The TLV314 family incorporates internal electrostatic discharge (ESD) protection circuits on all pins. In the case of input and output pins, this protection primarily consists of current-steering diodes connected between the input and power-supply pins. These ESD protection diodes also provide in-circuit, input overdrive protection, as long as the current is limited to 10 mA as stated in the *Absolute Maximum Ratings* table. Figure 19 shows how a series input resistor can be added to the driven input to limit the input current. The added resistor contributes thermal noise at the amplifier input, which must be kept to a minimum in noise-sensitive applications.

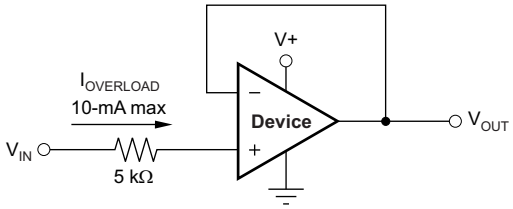

Figure 19. Input Current Protection

Copyright © 2016, Texas Instruments Incorporated

11 Layout

11.1 Layout Guidelines

For best operational performance of the device, use good printed circuit board (PCB) layout practices, including:

- Noise can propagate into analog circuitry through the power pins of the circuit as a whole and the operational amplifier. Use bypass capacitors to reduce the coupled noise by providing low-impedance power sources local to the analog circuitry.
  - Connect low-ESR, 0.1-µF ceramic bypass capacitors between each supply pin and ground, placed as close to the device as possible. A single bypass capacitor from V+ to ground is applicable for single-supply applications.
- Separate grounding for analog and digital portions of the circuitry is one of the simplest and most effective methods of noise suppression. One or more layers on multilayer PCBs are usually devoted to ground planes. A ground plane helps distribute heat and reduces EMI noise pickup. Make sure to physically separate digital and analog grounds, paying attention to the flow of the ground current. For more detailed information, see *Circuit Board Layout Techniques*, SLOA089.
- To reduce parasitic coupling, run the input traces as far away from the supply or output traces as possible. If these traces cannot be kept separate, crossing the sensitive trace perpendicularly is much better than crossing in parallel with the noisy trace.
- Place the external components as close to the device as possible. Keep R_F and R_G close to the inverting input in order to minimize parasitic capacitance, as shown in Figure 20.
- Keep the length of input traces as short as possible. Always remember that the input traces are the most sensitive part of the circuit.
- Consider a driven, low-impedance guard ring around the critical traces. A guard ring can significantly reduce leakage currents from nearby traces that are at different potentials.

11.2 Layout Example

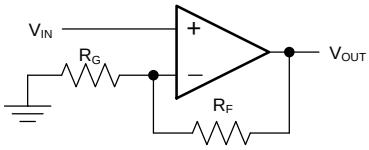

(Schematic Representation)

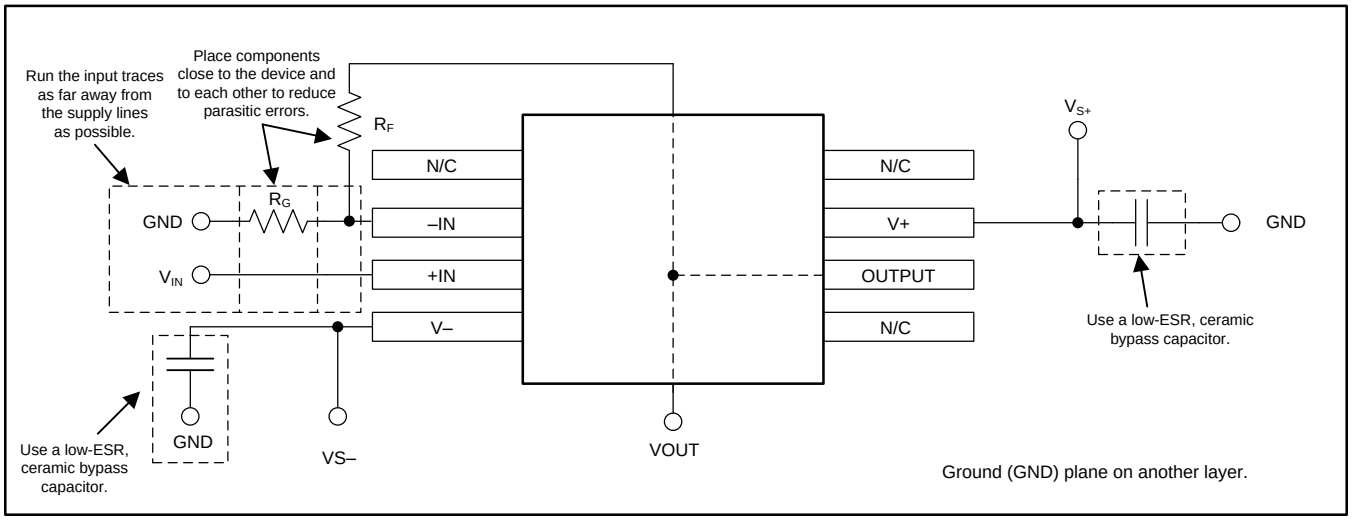

Figure 20. Operational Amplifier Board Layout for Noninverting Configuration

12 Device and Documentation Support

12.1 Device Support

12.2 Documentation Support

12.2.1 Related Documentation

For related documentation, see the following:

- *EMI Rejection Ratio of Operational Amplifiers*, SBOA128
- *Circuit Board Layout Techniques* , SLOA089
- *QFN/SON PCB Attachment*, SLUA271
- *Quad Flatpack No-Lead Logic Packages*, SCBA017

12.3 Related Links

Table 2 lists quick access links. Categories include technical documents, support and community resources, tools and software, and quick access to sample or buy.

Table 2. Related Links

PARTS	PRODUCT FOLDER	SAMPLE & BUY	TECHNICAL DOCUMENTS	TOOLS & SOFTWARE	SUPPORT & COMMUNITY
TLV314	Click here	Click here	Click here	Click here	Click here
TLV2314	Click here	Click here	Click here	Click here	Click here
TLV4314	Click here	Click here	Click here	Click here	Click here

12.4 Community Resources

The following links connect to TI community resources. Linked contents are provided "AS IS" by the respective contributors. They do not constitute TI specifications and do not necessarily reflect TI's views; see TI's Terms of Use.

TI E2E™ Online Community ***TI's Engineer-to-Engineer (E2E) Community.*** Created to foster collaboration among engineers. At e2e.ti.com, you can ask questions, share knowledge, explore ideas and help solve problems with fellow engineers.

Design Support ***TI's Design Support*** Quickly find helpful E2E forums along with design support tools and contact information for technical support.

12.5 Trademarks

E2E is a trademark of Texas Instruments.
All other trademarks are the property of their respective owners.

12.6 Electrostatic Discharge Caution

These devices have limited built-in ESD protection. The leads should be shorted together or the device placed in conductive foam during storage or handling to prevent electrostatic damage to the MOS gates.

12.7 Glossary

SLYZ022 — *TI Glossary*.

This glossary lists and explains terms, acronyms, and definitions.

13 Mechanical, Packaging, and Orderable Information

The following pages include mechanical, packaging, and orderable information. This information is the most current data available for the designated devices. This data is subject to change without notice and revision of this document. For browser-based versions of this data sheet, refer to the left-hand navigation.

Copyright © 2016, Texas Instruments Incorporated

PACKAGING INFORMATION

Orderable part number	Status (1)	Material type (2)	Package | Pins	Package qty | Carrier	RoHS (3)	Lead finish/ Ball material (4)	MSL rating/ Peak reflow (5)	Op temp (°C)	Part marking (6)
TLV2314IDGKR	Active	Production	VSSOP (DGK) | 8	2500 | LARGE T&R	Yes	NIPDAU | SN | NIPDAUAG	Level-2-260C-1 YEAR	-40 to 125	13E7
TLV2314IDGKR.A	Active	Production	VSSOP (DGK) | 8	2500 | LARGE T&R	Yes	NIPDAU	Level-2-260C-1 YEAR	-40 to 125	13E7
TLV2314IDGKR.B	Active	Production	VSSOP (DGK) | 8	2500 | LARGE T&R	Yes	NIPDAU	Level-2-260C-1 YEAR	-40 to 125	13E7
TLV2314IDGKRG4	Active	Production	VSSOP (DGK) | 8	2500 | LARGE T&R	Yes	NIPDAU	Level-2-260C-1 YEAR	-40 to 125	13E7
TLV2314IDGKRG4.A	Active	Production	VSSOP (DGK) | 8	2500 | LARGE T&R	Yes	NIPDAU	Level-2-260C-1 YEAR	-40 to 125	13E7
TLV2314IDGKRG4.B	Active	Production	VSSOP (DGK) | 8	2500 | LARGE T&R	Yes	NIPDAU	Level-2-260C-1 YEAR	-40 to 125	13E7
TLV2314IDGKT	Active	Production	VSSOP (DGK) | 8	250 | SMALL T&R	Yes	NIPDAU | SN | NIPDAUAG	Level-2-260C-1 YEAR	-40 to 125	13E7
TLV2314IDGKT.A	Active	Production	VSSOP (DGK) | 8	250 | SMALL T&R	Yes	NIPDAU	Level-2-260C-1 YEAR	-40 to 125	13E7
TLV2314IDGKT.B	Active	Production	VSSOP (DGK) | 8	250 | SMALL T&R	Yes	NIPDAU	Level-2-260C-1 YEAR	-40 to 125	13E7
TLV2314IDR	Active	Production	SOIC (D) | 8	2500 | LARGE T&R	Yes	NIPDAU	Level-2-260C-1 YEAR	-40 to 125	V2314
TLV2314IDR.A	Active	Production	SOIC (D) | 8	2500 | LARGE T&R	Yes	NIPDAU	Level-2-260C-1 YEAR	-40 to 125	V2314
TLV2314IDR.B	Active	Production	SOIC (D) | 8	2500 | LARGE T&R	Yes	NIPDAU	Level-2-260C-1 YEAR	-40 to 125	V2314
TLV314IDBVR	Active	Production	SOT-23 (DBV) | 5	3000 | LARGE T&R	Yes	NIPDAU | SN | NIPDAU	Level-2-260C-1 YEAR	-40 to 125	12H
TLV314IDBVR.A	Active	Production	SOT-23 (DBV) | 5	3000 | LARGE T&R	Yes	SN	Level-2-260C-1 YEAR	-40 to 125	12H
TLV314IDBVR.B	Active	Production	SOT-23 (DBV) | 5	3000 | LARGE T&R	Yes	SN	Level-2-260C-1 YEAR	-40 to 125	12H
TLV314IDBVRG4	Active	Production	SOT-23 (DBV) | 5	3000 | LARGE T&R	Yes	NIPDAU	Level-1-260C-UNLIM	-40 to 125	12H
TLV314IDBVRG4.A	Active	Production	SOT-23 (DBV) | 5	3000 | LARGE T&R	Yes	NIPDAU	Level-1-260C-UNLIM	-40 to 125	12H
TLV314IDBVRG4.B	Active	Production	SOT-23 (DBV) | 5	3000 | LARGE T&R	Yes	NIPDAU	Level-1-260C-UNLIM	-40 to 125	12H
TLV314IDBVT	Active	Production	SOT-23 (DBV) | 5	250 | SMALL T&R	Yes	NIPDAU | SN | NIPDAU	Level-2-260C-1 YEAR	-40 to 125	12H
TLV314IDBVT.A	Active	Production	SOT-23 (DBV) | 5	250 | SMALL T&R	Yes	SN	Level-2-260C-1 YEAR	-40 to 125	12H
TLV314IDBVT.B	Active	Production	SOT-23 (DBV) | 5	250 | SMALL T&R	Yes	SN	Level-2-260C-1 YEAR	-40 to 125	12H
TLV314IDCKR	Active	Production	SC70 (DCK) | 5	3000 | LARGE T&R	Yes	NIPDAU | SN	Level-1-260C-UNLIM	-40 to 125	12I
TLV314IDCKR.A	Active	Production	SC70 (DCK) | 5	3000 | LARGE T&R	Yes	SN	Level-1-260C-UNLIM	-40 to 125	12I
TLV314IDCKR.B	Active	Production	SC70 (DCK) | 5	3000 | LARGE T&R	Yes	SN	Level-1-260C-UNLIM	-40 to 125	12I
TLV314IDCKRG4	Active	Production	SC70 (DCK) | 5	3000 | LARGE T&R	Yes	NIPDAU	Level-1-260C-UNLIM	-40 to 125	12I
TLV314IDCKRG4.A	Active	Production	SC70 (DCK) | 5	3000 | LARGE T&R	Yes	NIPDAU	Level-1-260C-UNLIM	-40 to 125	12I
TLV314IDCKRG4.B	Active	Production	SC70 (DCK) | 5	3000 | LARGE T&R	Yes	NIPDAU	Level-1-260C-UNLIM	-40 to 125	12I
TLV314IDCKT	Active	Production	SC70 (DCK) | 5	250 | SMALL T&R	Yes	NIPDAU | SN	Level-1-260C-UNLIM	-40 to 125	12I

Orderable part number	Status (1)	Material type (2)	Package | Pins	Package qty | Carrier	RoHS (3)	Lead finish/ Ball material (4)	MSL rating/ Peak reflow (5)	Op temp (°C)	Part marking (6)
TLV314IDCKT.A	Active	Production	SC70 (DCK) | 5	250 | SMALL T&R	Yes	SN	Level-1-260C-UNLIM	-40 to 125	12I
TLV314IDCKT.B	Active	Production	SC70 (DCK) | 5	250 | SMALL T&R	Yes	SN	Level-1-260C-UNLIM	-40 to 125	12I
TLV4314IPWR	Active	Production	TSSOP (PW) | 14	2000 | LARGE T&R	Yes	NIPDAU | SN	Level-2-260C-1 YEAR	-40 to 125	V4314
TLV4314IPWR.A	Active	Production	TSSOP (PW) | 14	2000 | LARGE T&R	Yes	NIPDAU	Level-2-260C-1 YEAR	-40 to 125	V4314

(1) **Status:** For more details on status, see our product life cycle.

(2) **Material type:** When designated, preproduction parts are prototypes/experimental devices, and are not yet approved or released for full production. Testing and final process, including without limitation quality assurance, reliability performance testing, and/or process qualification, may not yet be complete, and this item is subject to further changes or possible discontinuation. If available for ordering, purchases will be subject to an additional waiver at checkout, and are intended for early internal evaluation purposes only. These items are sold without warranties of any kind.

(3) **RoHS values:** Yes, No, RoHS Exempt. See the TI RoHS Statement for additional information and value definition.

(4) **Lead finish/Ball material:** Parts may have multiple material finish options. Finish options are separated by a vertical ruled line. Lead finish/Ball material values may wrap to two lines if the finish value exceeds the maximum column width.

(5) **MSL rating/Peak reflow:** The moisture sensitivity level ratings and peak solder (reflow) temperatures. In the event that a part has multiple moisture sensitivity ratings, only the lowest level per JEDEC standards is shown. Refer to the shipping label for the actual reflow temperature that will be used to mount the part to the printed circuit board.

(6) **Part marking:** There may be an additional marking, which relates to the logo, the lot trace code information, or the environmental category of the part.

Multiple part markings will be inside parentheses. Only one part marking contained in parentheses and separated by a "~" will appear on a part. If a line is indented then it is a continuation of the previous line and the two combined represent the entire part marking for that device.

Important Information and Disclaimer: The information provided on this page represents TI's knowledge and belief as of the date that it is provided. TI bases its knowledge and belief on information provided by third parties, and makes no representation or warranty as to the accuracy of such information. Efforts are underway to better integrate information from third parties. TI has taken and continues to take reasonable steps to provide representative and accurate information but may not have conducted destructive testing or chemical analysis on incoming materials and chemicals. TI and TI suppliers consider certain information to be proprietary, and thus CAS numbers and other limited information may not be available for release.

In no event shall TI's liability arising out of such information exceed the total purchase price of the TI part(s) at issue in this document sold by TI to Customer on an annual basis.

OTHER QUALIFIED VERSIONS OF TLV2314, TLV314, TLV4314 :

- Automotive : TLV2314-Q1, TLV314-Q1, TLV4314-Q1

NOTE: Qualified Version Definitions:

- Automotive - Q100 devices qualified for high-reliability automotive applications targeting zero defects

TAPE AND REEL INFORMATION

REEL DIMENSIONS

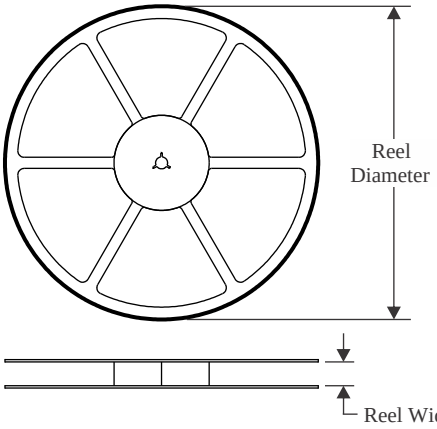

TAPE DIMENSIONS

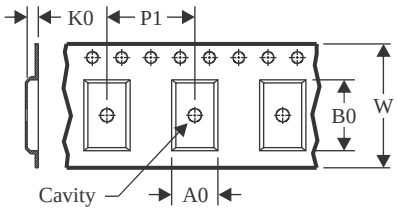

A0	Dimension designed to accommodate the component width
B0	Dimension designed to accommodate the component length
K0	Dimension designed to accommodate the component thickness
W	Overall width of the carrier tape
P1	Pitch between successive cavity centers

QUADRANT ASSIGNMENTS FOR PIN 1 ORIENTATION IN TAPE

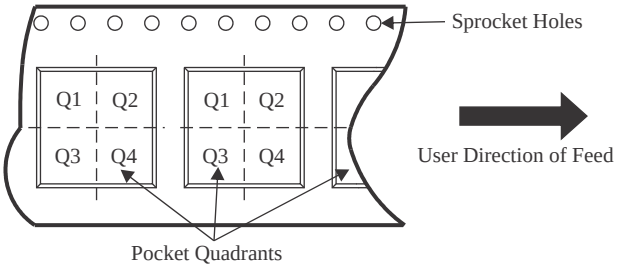

*All dimensions are nominal

Device	Package Type	Package Drawing	Pins	SPQ	Reel Diameter (mm)	Reel Width W1 (mm)	A0 (mm)	B0 (mm)	K0 (mm)	P1 (mm)	W (mm)	Pin1 Quadrant
TLV2314IDGKR	VSSOP	DGK	8	2500	330.0	12.4	5.3	3.4	1.4	8.0	12.0	Q1
TLV2314IDGKRG4	VSSOP	DGK	8	2500	330.0	12.4	5.3	3.4	1.4	8.0	12.0	Q1
TLV2314IDGKT	VSSOP	DGK	8	250	330.0	12.4	5.3	3.4	1.4	8.0	12.0	Q1
TLV2314IDR	SOIC	D	8	2500	330.0	12.4	6.4	5.2	2.1	8.0	12.0	Q1
TLV314IDBVR	SOT-23	DBV	5	3000	180.0	8.4	3.2	3.2	1.4	4.0	8.0	Q3
TLV314IDBVR	SOT-23	DBV	5	3000	178.0	8.4	3.2	3.2	1.4	4.0	8.0	Q3
TLV314IDBVRG4	SOT-23	DBV	5	3000	180.0	8.4	3.2	3.2	1.4	4.0	8.0	Q3
TLV314IDBVT	SOT-23	DBV	5	250	180.0	8.4	3.2	3.2	1.4	4.0	8.0	Q3
TLV314IDCKR	SC70	DCK	5	3000	180.0	8.4	2.3	2.5	1.2	4.0	8.0	Q3
TLV314IDCKRG4	SC70	DCK	5	3000	178.0	9.0	2.4	2.5	1.2	4.0	8.0	Q3
TLV314IDCKT	SC70	DCK	5	250	180.0	8.4	2.3	2.5	1.2	4.0	8.0	Q3
TLV4314IPWR	TSSOP	PW	14	2000	330.0	12.4	6.9	5.6	1.6	8.0	12.0	Q1

TAPE AND REEL BOX DIMENSIONS

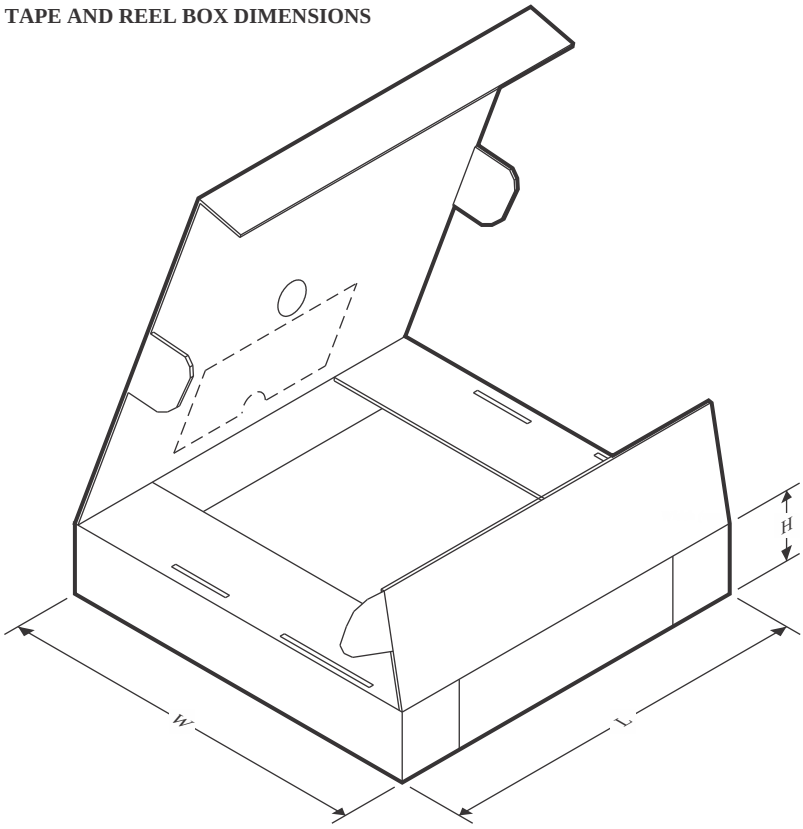

*All dimensions are nominal

Device	Package Type	Package Drawing	Pins	SPQ	Length (mm)	Width (mm)	Height (mm)
TLV2314IDGKR	VSSOP	DGK	8	2500	356.0	356.0	35.0
TLV2314IDGKRG4	VSSOP	DGK	8	2500	356.0	356.0	35.0
TLV2314IDGKT	VSSOP	DGK	8	250	356.0	356.0	35.0
TLV2314IDR	SOIC	D	8	2500	356.0	356.0	35.0
TLV314IDBVR	SOT-23	DBV	5	3000	210.0	185.0	35.0
TLV314IDBVR	SOT-23	DBV	5	3000	208.0	191.0	35.0
TLV314IDBVRG4	SOT-23	DBV	5	3000	210.0	185.0	35.0
TLV314IDBVT	SOT-23	DBV	5	250	210.0	185.0	35.0
TLV314IDCKR	SC70	DCK	5	3000	210.0	185.0	35.0
TLV314IDCKRG4	SC70	DCK	5	3000	180.0	180.0	18.0
TLV314IDCKT	SC70	DCK	5	250	210.0	185.0	35.0
TLV4314IPWR	TSSOP	PW	14	2000	356.0	356.0	35.0

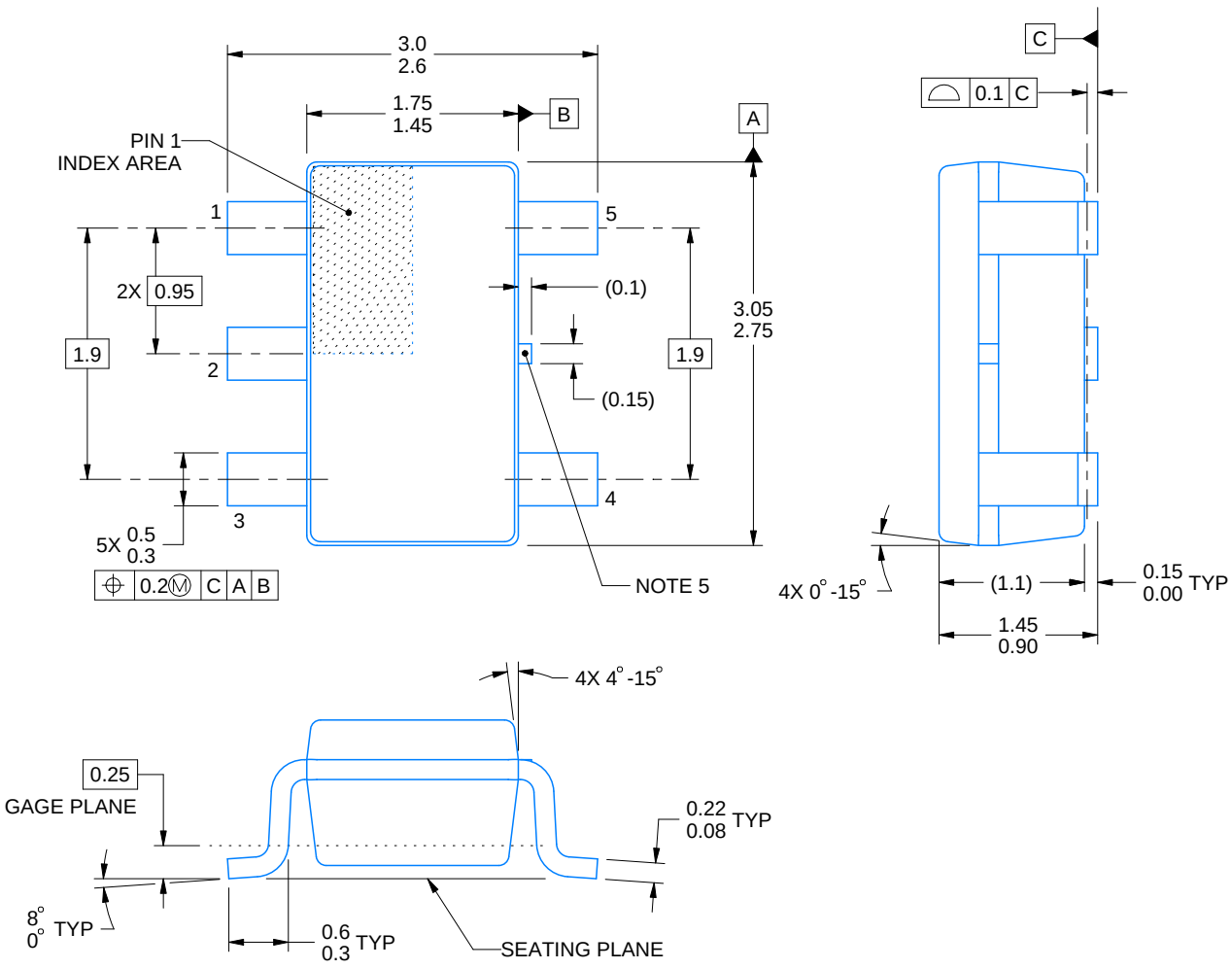

4214839/K 08/2024

NOTES:

1. All linear dimensions are in millimeters. Any dimensions in parenthesis are for reference only. Dimensioning and tolerancing per ASME Y14.5M.
2. This drawing is subject to change without notice.
3. Refernce JEDEC MO-178.
4. Body dimensions do not include mold flash, protrusions, or gate burrs. Mold flash, protrusions, or gate burrs shall not exceed 0.25 mm per side.
5. Support pin may differ or may not be present.

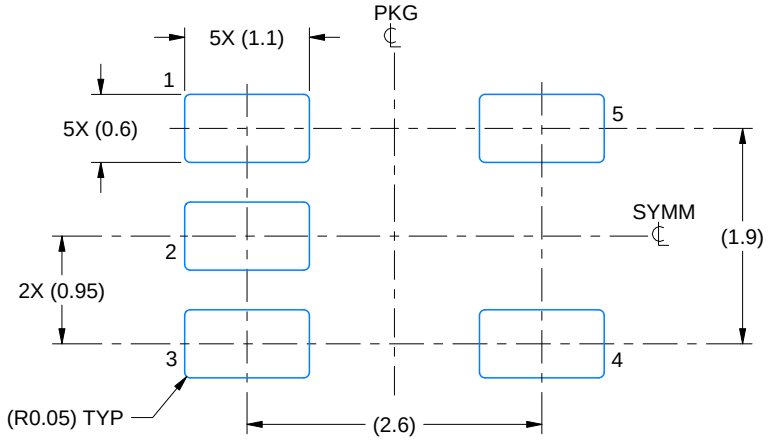

LAND PATTERN EXAMPLE
EXPOSED METAL SHOWN
SCALE:15X

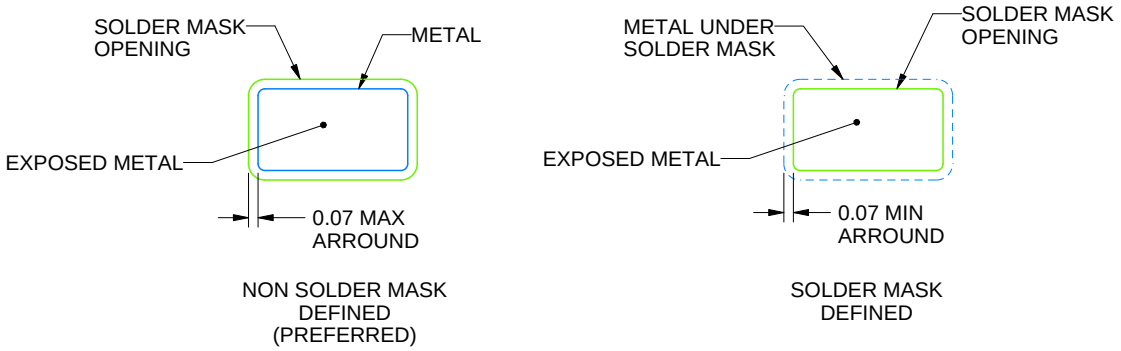

SOLDER MASK DETAILS

4214839/K 08/2024

NOTES: (continued)

6. Publication IPC-7351 may have alternate designs.
7. Solder mask tolerances between and around signal pads can vary based on board fabrication site.

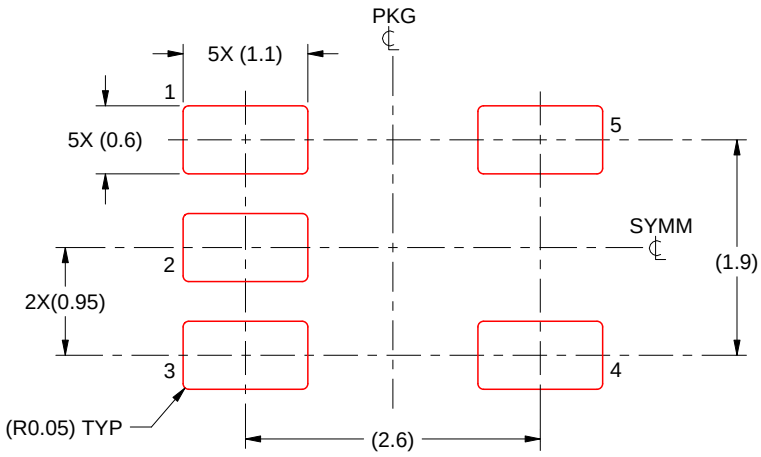

SOLDER PASTE EXAMPLE
BASED ON 0.125 mm THICK STENCIL
SCALE:15X

4214839/K 08/2024

NOTES: (continued)

8. Laser cutting apertures with trapezoidal walls and rounded corners may offer better paste release. IPC-7525 may have alternate design recommendations.
9. Board assembly site may have different recommendations for stencil design.

PACKAGE OUTLINE

DGK0008A

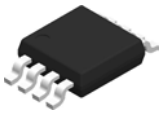

VSSOP - 1.1 mm max height

SMALL OUTLINE PACKAGE

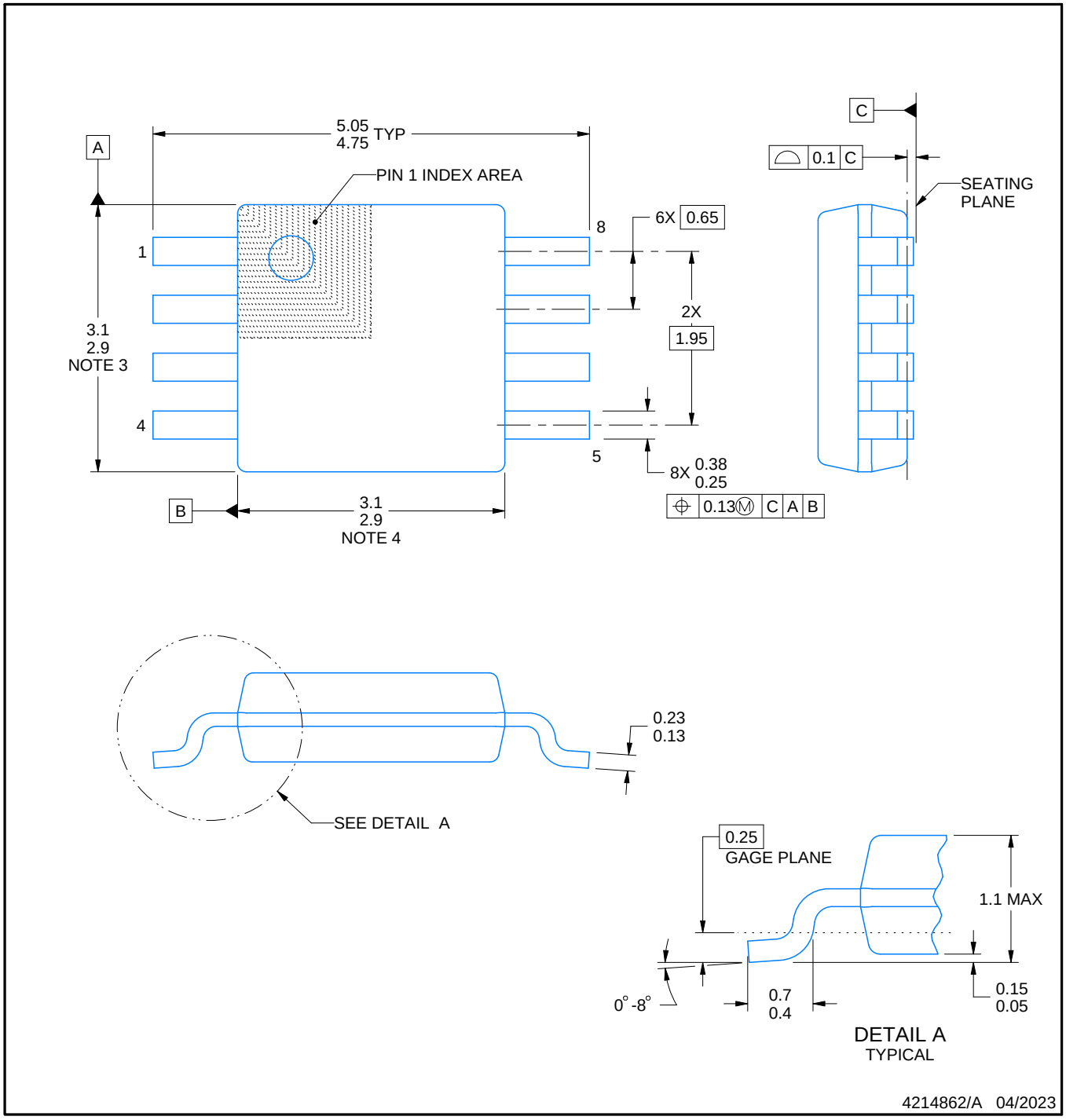

PowerPAD is a trademark of Texas Instruments.

NOTES:

1. All linear dimensions are in millimeters. Any dimensions in parenthesis are for reference only. Dimensioning and tolerancing per ASME Y14.5M.
2. This drawing is subject to change without notice.
3. This dimension does not include mold flash, protrusions, or gate burrs. Mold flash, protrusions, or gate burrs shall not exceed 0.15 mm per side.
4. This dimension does not include interlead flash. Interlead flash shall not exceed 0.25 mm per side.
5. Reference JEDEC registration MO-187.

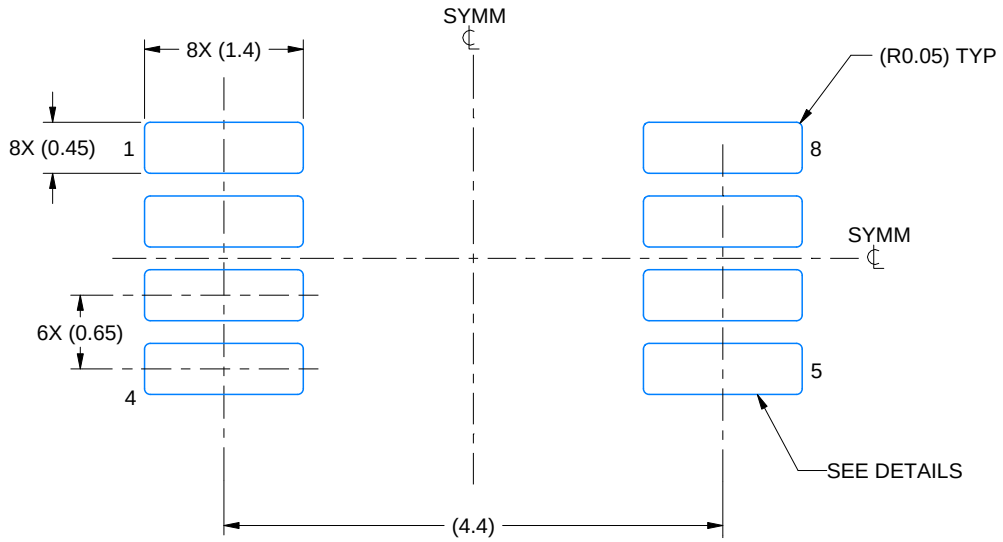

LAND PATTERN EXAMPLE
EXPOSED METAL SHOWN
SCALE: 15X

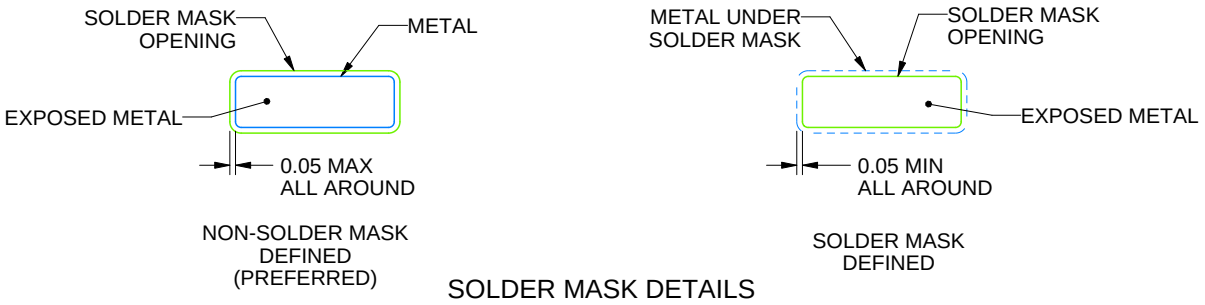

SOLDER MASK DETAILS

4214862/A 04/2023

NOTES: (continued)

6. Publication IPC-7351 may have alternate designs.
7. Solder mask tolerances between and around signal pads can vary based on board fabrication site.
8. Vias are optional depending on application, refer to device data sheet. If any vias are implemented, refer to their locations shown on this view. It is recommended that vias under paste be filled, plugged or tented.
9. Size of metal pad may vary due to creepage requirement.

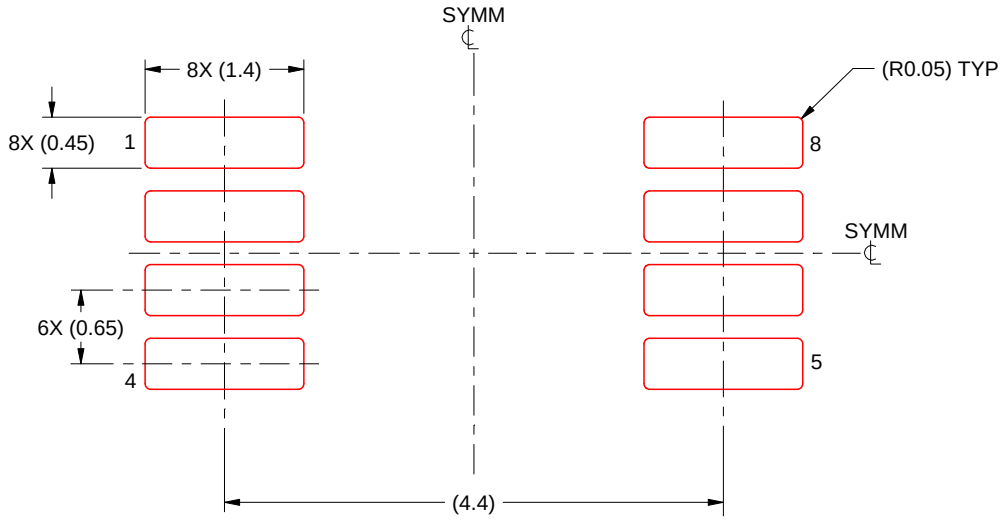

SOLDER PASTE EXAMPLE
SCALE: 15X

4214862/A 04/2023

NOTES: (continued)

11. Laser cutting apertures with trapezoidal walls and rounded corners may offer better paste release. IPC-7525 may have alternate design recommendations.
12. Board assembly site may have different recommendations for stencil design.

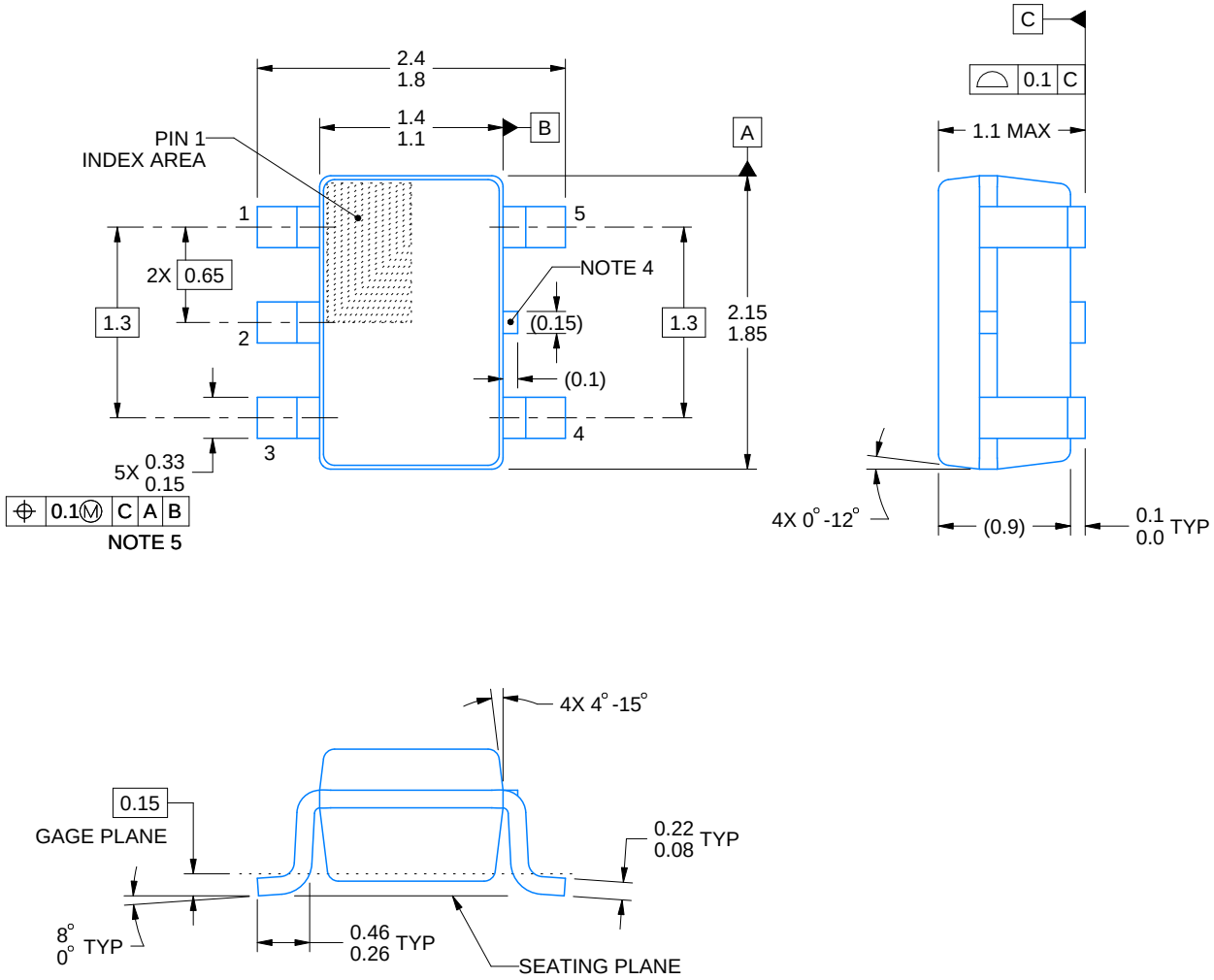

NOTES:

1. All linear dimensions are in millimeters. Any dimensions in parenthesis are for reference only. Dimensioning and tolerancing per ASME Y14.5M.
2. This drawing is subject to change without notice.
3. Refernce JEDEC MO-203.
4. Support pin may differ or may not be present.
5. Lead width does not comply with JEDEC.
6. Body dimensions do not include mold flash, protrusions, or gate burrs. Mold flash, protrusions, or gate burrs shall not exceed 0.25mm per side

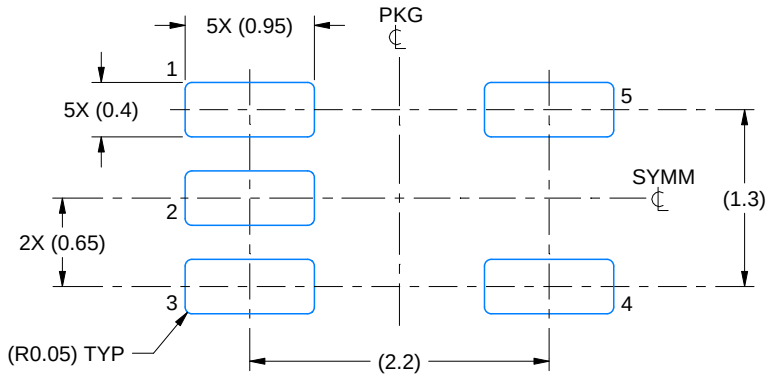

LAND PATTERN EXAMPLE
EXPOSED METAL SHOWN
SCALE:18X

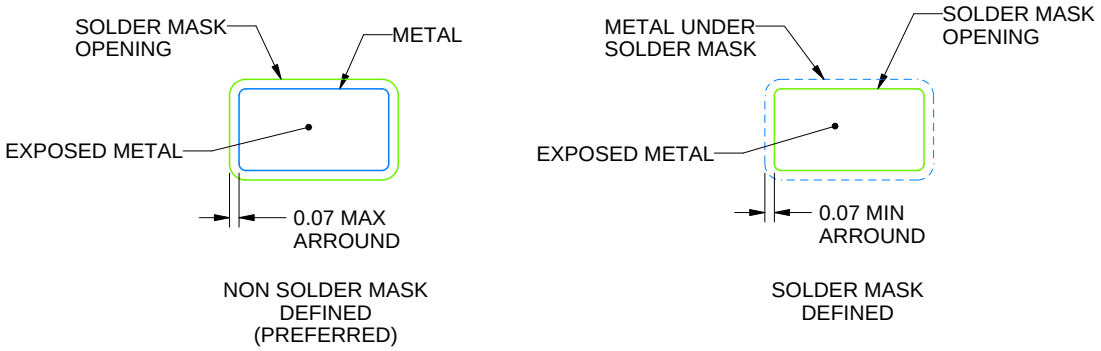

SOLDER MASK DETAILS

4214834/G 11/2024

NOTES: (continued)

7. Publication IPC-7351 may have alternate designs.
8. Solder mask tolerances between and around signal pads can vary based on board fabrication site.

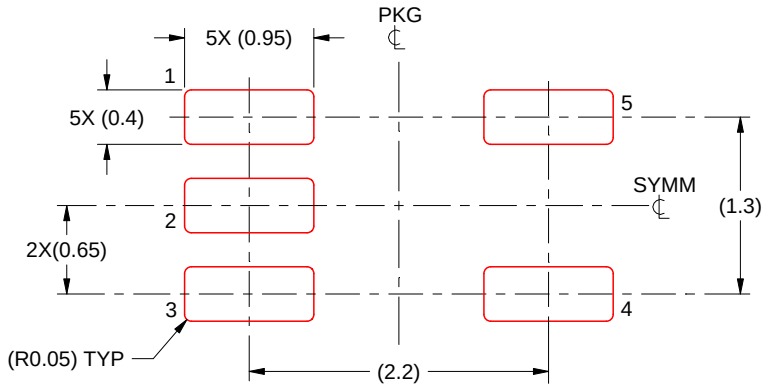

SOLDER PASTE EXAMPLE
BASED ON 0.125 THICK STENCIL
SCALE:18X

4214834/G 11/2024

NOTES: (continued)

9. Laser cutting apertures with trapezoidal walls and rounded corners may offer better paste release. IPC-7525 may have alternate design recommendations.
10. Board assembly site may have different recommendations for stencil design.

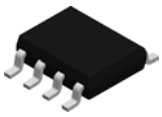

PACKAGE OUTLINE

D0008A

SOIC - 1.75 mm max height

SMALL OUTLINE INTEGRATED CIRCUIT

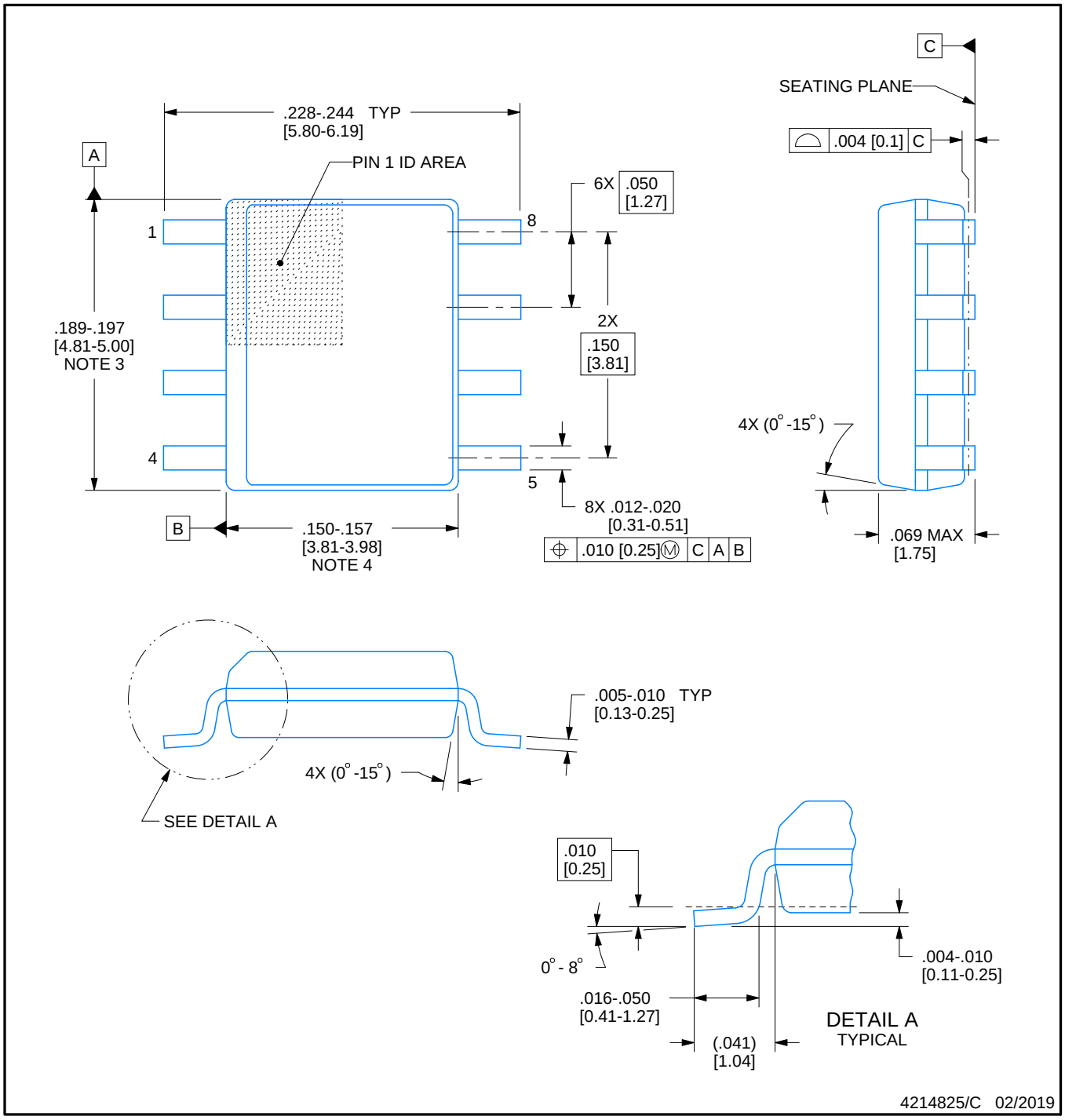

NOTES:

1. Linear dimensions are in inches [millimeters]. Dimensions in parenthesis are for reference only. Controlling dimensions are in inches. Dimensioning and tolerancing per ASME Y14.5M.
2. This drawing is subject to change without notice.
3. This dimension does not include mold flash, protrusions, or gate burrs. Mold flash, protrusions, or gate burrs shall not exceed .006 [0.15] per side.
4. This dimension does not include interlead flash.
5. Reference JEDEC registration MS-012, variation AA.

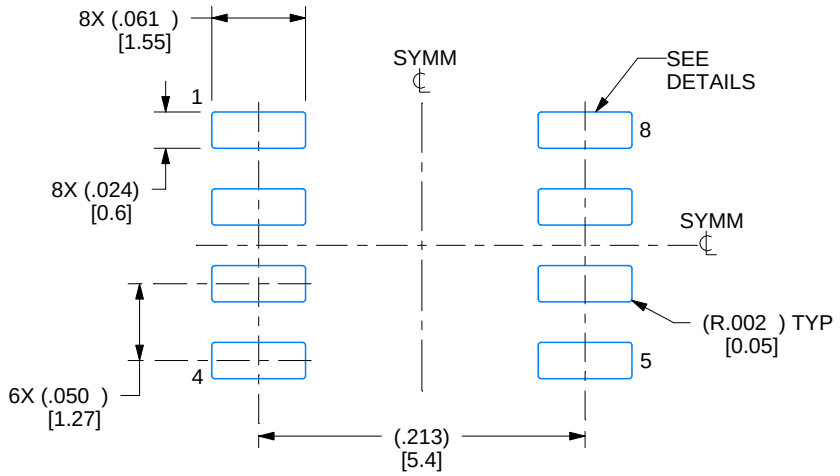

LAND PATTERN EXAMPLE
EXPOSED METAL SHOWN
SCALE:8X

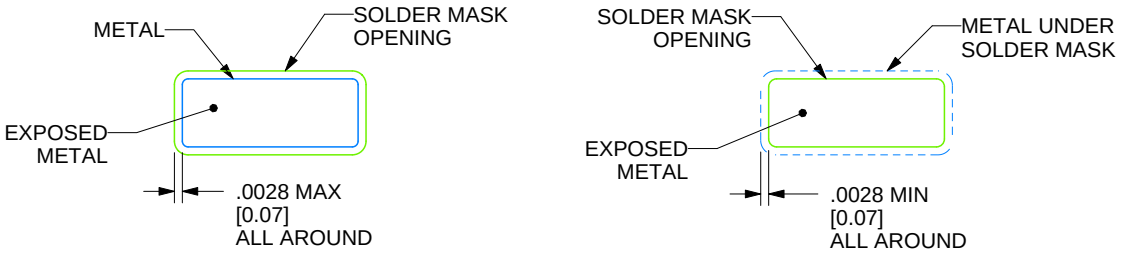

SOLDER MASK DETAILS

4214825/C 02/2019

NOTES: (continued)

6. Publication IPC-7351 may have alternate designs.
7. Solder mask tolerances between and around signal pads can vary based on board fabrication site.

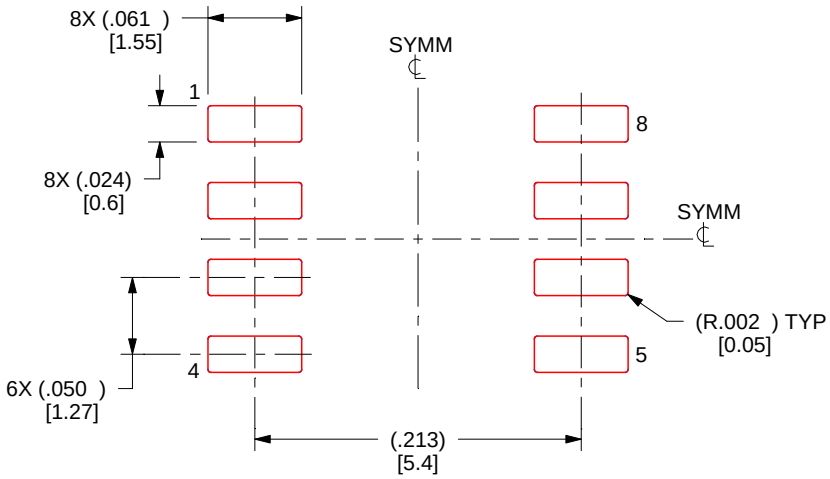

SOLDER PASTE EXAMPLE
BASED ON .005 INCH [0.125 MM] THICK STENCIL
SCALE:8X

4214825/C 02/2019

NOTES: (continued)

8. Laser cutting apertures with trapezoidal walls and rounded corners may offer better paste release. IPC-7525 may have alternate design recommendations.
9. Board assembly site may have different recommendations for stencil design.

PW0014A

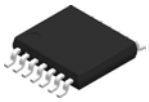

PACKAGE OUTLINE

TSSOP - 1.2 mm max height

SMALL OUTLINE PACKAGE

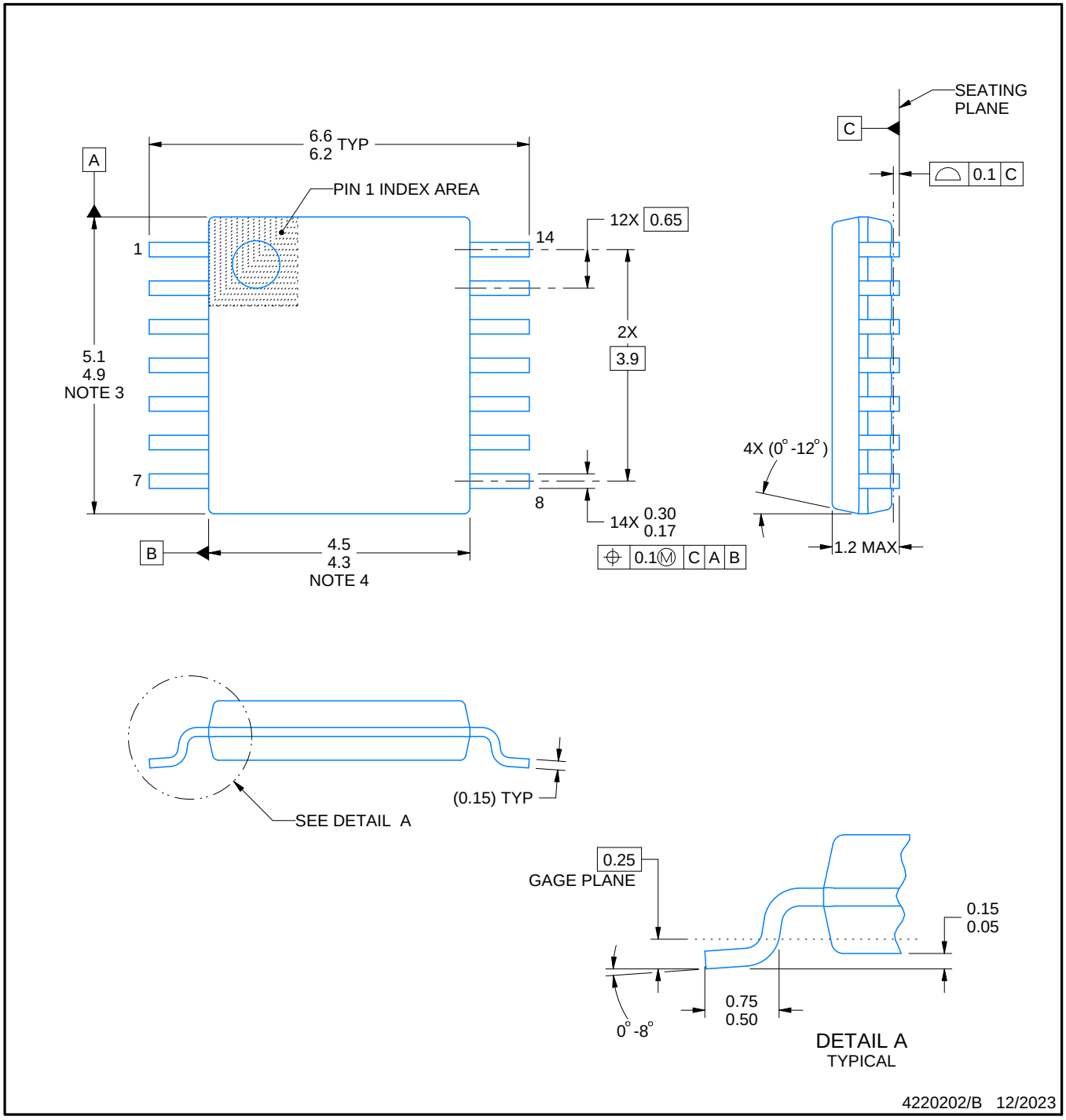

NOTES:

1. All linear dimensions are in millimeters. Any dimensions in parenthesis are for reference only. Dimensioning and tolerancing per ASME Y14.5M.
2. This drawing is subject to change without notice.
3. This dimension does not include mold flash, protrusions, or gate burrs. Mold flash, protrusions, or gate burrs shall not exceed 0.15 mm per side.
4. This dimension does not include interlead flash. Interlead flash shall not exceed 0.25 mm per side.
5. Reference JEDEC registration MO-153.

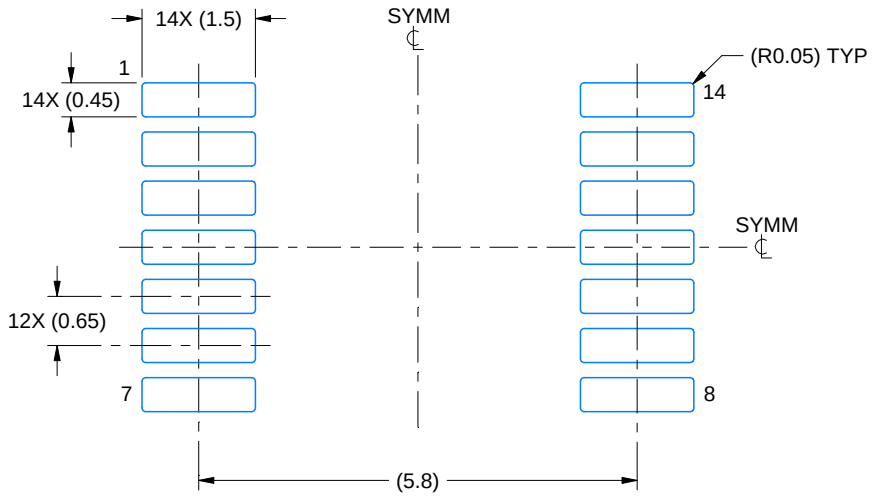

LAND PATTERN EXAMPLE
EXPOSED METAL SHOWN
SCALE: 10X

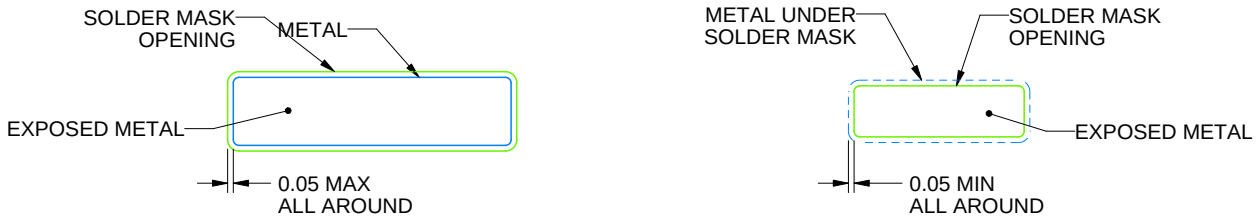

NON-SOLDER MASK DEFINED (PREFERRED)

SOLDER MASK DEFINED

SOLDER MASK DETAILS

4220202/B 12/2023

NOTES: (continued)

6. Publication IPC-7351 may have alternate designs.
7. Solder mask tolerances between and around signal pads can vary based on board fabrication site.

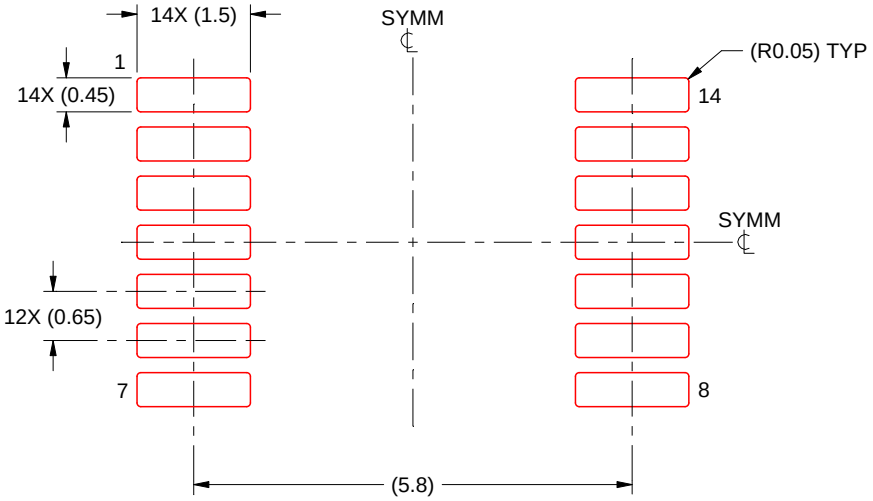

SOLDER PASTE EXAMPLE
BASED ON 0.125 mm THICK STENCIL
SCALE: 10X

4220202/B 12/2023

NOTES: (continued)

8. Laser cutting apertures with trapezoidal walls and rounded corners may offer better paste release. IPC-7525 may have alternate design recommendations.
9. Board assembly site may have different recommendations for stencil design.

IMPORTANT NOTICE AND DISCLAIMER

TI PROVIDES TECHNICAL AND RELIABILITY DATA (INCLUDING DATA SHEETS), DESIGN RESOURCES (INCLUDING REFERENCE DESIGNS), APPLICATION OR OTHER DESIGN ADVICE, WEB TOOLS, SAFETY INFORMATION, AND OTHER RESOURCES “AS IS” AND WITH ALL FAULTS, AND DISCLAIMS ALL WARRANTIES, EXPRESS AND IMPLIED, INCLUDING WITHOUT LIMITATION ANY IMPLIED WARRANTIES OF MERCHANTABILITY, FITNESS FOR A PARTICULAR PURPOSE OR NON-INFRINGEMENT OF THIRD PARTY INTELLECTUAL PROPERTY RIGHTS.

These resources are intended for skilled developers designing with TI products. You are solely responsible for (1) selecting the appropriate TI products for your application, (2) designing, validating and testing your application, and (3) ensuring your application meets applicable standards, and any other safety, security, regulatory or other requirements.

These resources are subject to change without notice. TI grants you permission to use these resources only for development of an application that uses the TI products described in the resource. Other reproduction and display of these resources is prohibited. No license is granted to any other TI intellectual property right or to any third party intellectual property right. TI disclaims responsibility for, and you will fully indemnify TI and its representatives against, any claims, damages, costs, losses, and liabilities arising out of your use of these resources.

TI’s products are provided subject to TI’s Terms of Sale or other applicable terms available either on ti.com or provided in conjunction with such TI products. TI’s provision of these resources does not expand or otherwise alter TI’s applicable warranties or warranty disclaimers for TI products.

TI objects to and rejects any additional or different terms you may have proposed.

Mailing Address: Texas Instruments, Post Office Box 655303, Dallas, Texas 75265
Copyright © 2025, Texas Instruments Incorporated