TPS23525: –48-V Hot Swap and Dual OR-ing Controller

1 Features

- –10-V to –80-V DC Operation, –200-V Absolute Maximum
- Soft Start Cap Disconnect
- 400-µA Gate Sourcing Current
- Dual Current Limit (based on V_{DS})
  - 25 mV ±4% When Low V_{DS}
  - 3 mV ±25% When High V_{DS}
- Programmable UV(±1.5%) and OV (±2%)
  - Programmable Hysteresis (±11%)
- Integrated Dual OR-ing Controller
  - Regulation: 25 mV ±15 mV
  - Fast Turn off: –6 mV ±4 mV
- Retries After Time Out
- 16-Pin TSSOP

2 Applications

- Remote Radio Units
- Baseband Units
- Routers and Switchers
- Small Cells
- –48-V Telecommunications Infrastructure

3 Description

The TPS23525 is an integrated hot swap and dual OR-ing controller that enables high power telecom systems to comply with stringent transient requirements. The 200-V absolute maximum rating makes it easier to survive lightning surge tests (IEC61000-4-5). The soft start cap disconnect allows for the use of smaller hot swap FETs by limiting the inrush current, without hurting the transient response. The 400-µA sourcing current allows fast recovery, which helps to avoid system resets during lightning surge tests. The dual current limit makes it easier to pass brown outs and input steps such as required by the ATIS 0600315.2013. Finally, it offers accurate undervoltage and overvoltage protection with programmable thresholds and hysteresis.

The TPS23525 integrates a dual OR-ing controller, making it ideal for –48-V systems fed by two redundant supplies.

Device Information(1)

PART NUMBER	PACKAGE	BODY SIZE (NOM)
TPS23525	TSSOP (16)	5.00 mm x 4.40 mm

(1) For all available packages, see the orderable addendum at the end of the data sheet.

Simplified Schematic

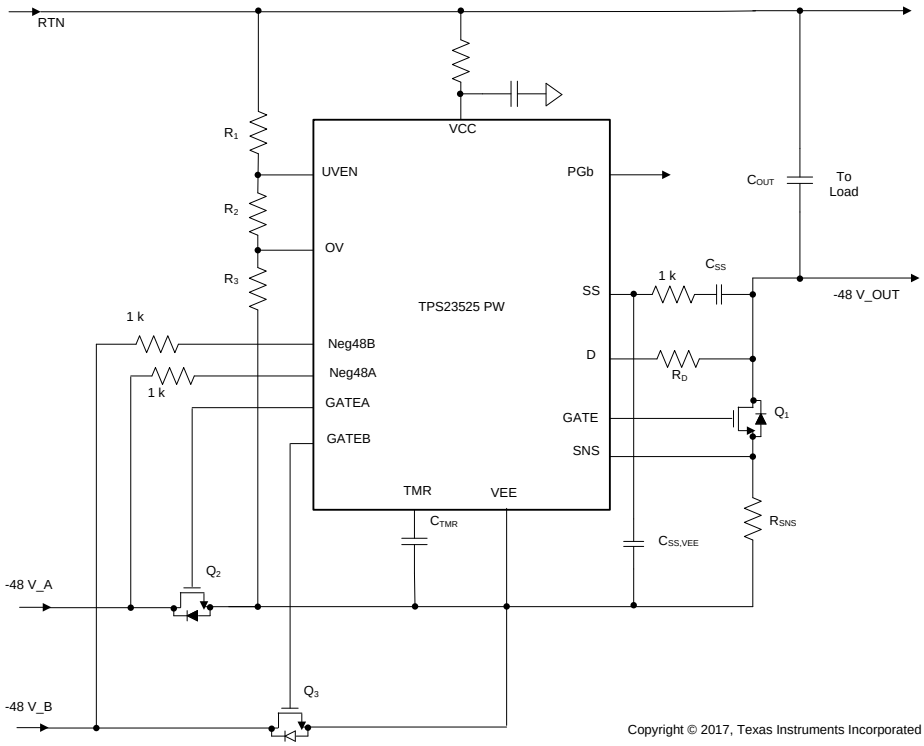

Copyright © 2017, Texas Instruments Incorporated

An IMPORTANT NOTICE at the end of this data sheet addresses availability, warranty, changes, use in safety-critical applications, intellectual property matters and other important disclaimers. PRODUCTION DATA.

Table of Contents

1 Features ... 1
2 Applications ... 1
3 Description ... 1
4 Revision History ... 2
5 Pin Configuration and Functions ... 3
6 Specifications ... 4
6.1 Absolute Maximum Ratings ... 4
6.2 ESD Ratings ... 4
6.3 Recommended Operating Conditions ... 4
6.4 Thermal Information ... 4
6.5 Electrical Characteristics ... 5
6.6 Switching Characteristics ... 8
6.7 Typical Characteristics ... 9
7 Parameter Measurement Information ... 10
7.1 Relationship between Sense Voltage, Gate Current, and Timer ... 10
8 Detailed Description ... 11
8.1 Overview ... 11
8.2 Functional Block Diagram ... 11
8.3 Feature Description ... 12
8.4 Device Functional Modes ... 15
9 Application and Implementation ... 18
9.1 Application Information ... 18
9.2 Typical Application ... 18
10 Power Supply Recommendations ... 31
11 Layout ... 32
11.1 Layout Guidelines ... 32
11.2 Layout Example ... 32
12 Device and Documentation Support ... 33
12.1 Device Support ... 33
12.2 Documentation Support ... 33
12.3 Receiving Notification of Documentation Updates 33
12.4 Community Resources ... 33
12.5 Trademarks ... 33
12.6 Electrostatic Discharge Caution ... 33
12.7 Glossary ... 33
13 Mechanical, Packaging, and Orderable Information ... 33

4 Revision History

Changes from Revision A (October 2017) to Revision B	Page
• Changed Input voltage V_{Neg48A}, V_{Neg48B} MIN value from -1 V to -0.3 V	4
• Added Input voltage V_{Neg48A}, V_{Neg48B} through 1-kΩ resistor	4

Changes from Original (October 2017) to Revision A	Page
• Changed $V_{(D,CL_SW)}$ MIN from 1.47 V to 1.46 V	6
• Changed $V_{(D,CL_SW)}$ MAX from 1.53 V to 1.54 V	6

Copyright © 2017, Texas Instruments Incorporated

5 Pin Configuration and Functions

PW Package
16-Pin (TSSOP)
Top View

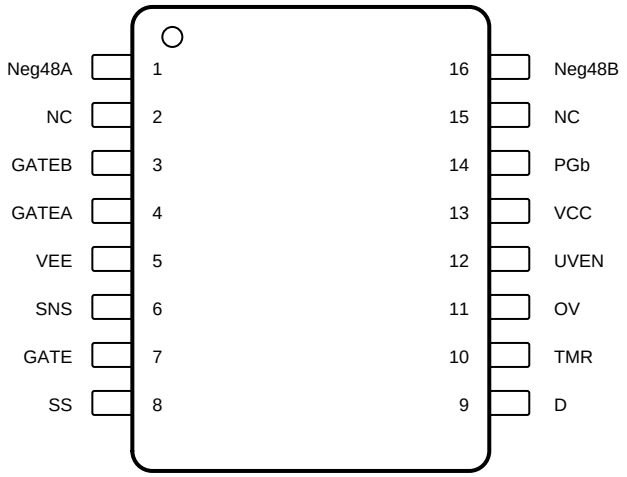

Not to scale

Pin Functions

PIN		TYPE	DESCRIPTION
NAME	NO.		
Neg48A	1	I	Input to the OR-ing controller for the –48A feed. The TPS23525 will regulate the drop from VEE to Neg48A to 25 mV to mimic an ideal diode.
NC	2		No connect to space high voltage pins.
GATEB	3	O	Gate driver for the OR-ing FET of the -48V_B feed.
GATEA	4	O	Gate driver for the OR-ing FET of the -48V_A feed.
VEE	5	GND	This pin corresponds to the IC GND. Kelvin sense to the bottom of R_{SNS} to ensure accurate current limit.
SNS	6	I	Sense pin, used to measure current and regulate it. Kelvin Sense to R_{SNS} to ensure accurate current limits.
GATE	7	O	Gate drive for the main hot swap FET.
SS	8	O	Pin used for soft starting the output. Connect a capacitor (C_{SS}) between the SS pin and -48V_OUT. The dv/dt rate on the -48V_OUT pin is proportional to the gate sourcing current divided by C_{SS}.
D	9	I	Pin used to sense the drain of the hot swap FET and to program the threshold where the hot swap switches from the CL1 and CL2. Connect a resistor from this pin to the drain of the hot swap FET (also called -48V_OUT) to program the threshold.
TMR	10	O	Timer pin used to program the duration when the hot swap FET can be in current limit. Program this time by adding a capacitor between the TMR pin and VEE.
OV	11	I	Input over voltage comparator. Tie a resistor divider to program the threshold where the device turns off due to over voltage event.
UVEN	12	I	Input under voltage comparator. Tie a resistor divider to program the threshold where the device turns on.
VCC	13	S	Clamped supply. Tie to RTN through resistor.
PGb	14	O	Power Good Bar, which is an open drain output that indicated when the power is good and the load can start drawing full power. PGb goes low when the hot swap is fully on and the DC/DC can draw full power.
NC	15		No connect to space high voltage pins.
Neg48B	16	I	Input to the OR-ing controller for the –48B feed. The TPS23525 will regulate the drop from VEE to Neg48B to 25 mV to mimic an ideal diode.

Copyright © 2017, Texas Instruments Incorporated

6 Specifications

6.1 Absolute Maximum Ratings

over operating free-air temperature range (unless otherwise noted)[1]

		MIN	MAX	UNIT
Supply voltage	V_{VCC} (current into V_{CC} <10 mA)	–0.3	20	V
Input voltage	V_{SNS}, V_{OV}	–0.3	6.5	V
	V_{UVEN}, V_D, V_{SS}	–0.3	30	V
Input voltage	V_{Neg48A}, V_{Neg48B}	-0.3	200	V
	V_{Neg48A}, V_{Neg48B} through 1-kΩ resistor	–2	200	V
Output voltage	V_{GATE}, V_{GATEA}, V_{GATEB}	–0.3	VCC	V
	V_{TMR}	–0.3	6.5	V
Output voltage	V_{PGb}	–0.3	200	V
Operating junction temperature, T_J		–40	125	°C
Storage temperature, T_{stg}		–55	150	°C

(1) Stresses beyond those listed under *Absolute Maximum Ratings* may cause permanent damage to the device. These are stress ratings only, which do not imply functional operation of the device at these or any other conditions beyond those indicated under *Recommended Operating Conditions*. Exposure to absolute-maximum-rated conditions for extended periods may affect device reliability.

6.2 ESD Ratings

			VALUE	UNIT
$V_{(ESD)}$	Electrostatic discharge	Human-body model (HBM), per ANSI/ESDA/JEDEC JS-001[1]	1000	V
		Charged-device model (CDM), per JEDEC specification JESD22-C101[2]	500	

(1) JEDEC document JEP155 states that 500-V HBM allows safe manufacturing with a standard ESD control process.
(2) JEDEC document JEP157 states that 250-V CDM allows safe manufacturing with a standard ESD control process.

6.3 Recommended Operating Conditions

over operating free-air temperature range (unless otherwise noted)

		MIN	NOM	MAX	UNIT
V_{VCC}	Supply voltage (current into V_{CC} <10 mA)	0		20	V
V_{SNS}, V_{OV}	Input voltage	0		5.5	V
V_{UVEN}, V_D, V_{SS}	Input voltage	0		18	V
V_{Neg48A}, V_{Neg48B}	Input voltage, through 1-kΩ resistor	–0.2		150	V
V_{GATE}, V_{GATEA}, V_{GATEB}	Output voltage	0		VCC	V
V_{TMR}	Output voltage	0		5.5	V
V_{PGb}	Output voltage	0		80	V
C_{SS}	Capacitance	1		200	nF
R_{SS}	Resistance	1		10	kΩ
R_D	Resistance	120		2,000	kΩ
$R_{NEG48VA}$, $R_{NEG48VB}$	Resistance		1		kΩ

6.4 Thermal Information

THERMAL METRIC[1]		TPS23525 PW (TSSOP) 16 PINS	UNIT
$R_{\theta JA}$	Junction-to-ambient thermal resistance	98.4	°C/W
$R_{\theta JC(top)}$	Junction-to-case (top) thermal resistance	31.3	°C/W
$R_{\theta JB}$	Junction-to-board thermal resistance	44.3	°C/W

(1) For more information about traditional and new thermal metrics, see the *Semiconductor and IC Package Thermal Metrics* application report.

Copyright © 2017, Texas Instruments Incorporated

Thermal Information (continued)

THERMAL METRIC[1]		TPS23525 PW (TSSOP) 16 PINS	UNIT
ψ_{JT}	Junction-to-top characterization parameter	1.8	°C/W
ψ_{JB}	Junction-to-board characterization parameter	43.6	°C/W
$R_{\theta JC(bot)}$	Junction-to-case (bottom) thermal resistance	N/A	°C/W

6.5 Electrical Characteristics

–40°C ≤ T_J ≤125°C, 1.1 mA < I_{VCC} < 10 mA, $V_{(UVEN)}$ = 2 V, $V_{(OV)}$ = $V_{(SNS)}$ = $V_{(D)}$ = 0 V, $V_{(SS)}$ = GATEx = Hi-Z , $V_{(TMR)}$ = 0 V, –1 V < $V_{NEG48Vx}$ < 150 V, ; All pin voltages are relative to VEE (unless otherwise noted)

PARAMETER		TEST CONDITIONS	MIN	TYP	MAX	UNIT
VCC – Clamped Supply						
$V_{(UVLO_VCC)}$	UVLO on VCC	rising	9	9.5	10	V
$V_{(UVLO_VCC,hyst)}$	UVLO hysteresis on VCC	hysteresis		1		V
$V_{(VCC)}$	VCC regulation	1.1< $I_{(VCC)}$ < 10 mA (current into VCC)	12	14.5	18	V
I_Q	Quiescent Current	V_{VCC} = 10 V. Off			1	mA
		V_{VCC} = 10 V. On			1	mA
		V_{VCC} = 10 V, Gate, GATEA, GATEB in regulation			1.1	mA
UVEN – Under Voltage and Enable						
$V_{(UVEN_T)}$	Threshold voltage for $V_{(UVEN)}$		0.985	1	1.015	V
$I_{(UV_hyst)}$	Hysteresis current, sourcing from UV pin	V_{UV} = 1.5 V	9	10	11.2	µA
OV – Over Voltage						
$V_{(OV_T)}$	Threshold voltage for V_{OV}		0.98	1	1.02	V
$I_{(OV_hyst)}$	Hysteresis current, sourcing from OV pin	V_{OV} = 1.5 V	9	10	11.2	µA
TMR – Timer						
V_{TMR}	Voltage on timer when part times out.	V_D = 0 V, TMR ↑, measure V_{TMR} when V_{GATE} = 0	1.47	1.5	1.53	V
V_{TMR2}	Voltage on timer when part times out.	V_D = 1 V, TMR ↑, measure V_{TMR} when V_{GATE} = 0	0.735	0.75	0.765	V
$I_{TMR,SRs}$	Timer Sourcing current when in fault condition or when retrying.	V_{SNS} = 0.1 V, V_D = 0 V, V_{TMR} = 0 V, measure I out from TMR	9	10	11	µA
		V_{SNS} = 0.1 V, VD = 2 V, V_{TMR} = 0 V, measure I out from TMR	45	50	55	µA
$I_{TMR,SNC}$	Timer sinking current when not in fault condition.	V_{SNS} = 0 V, V_D = 0 V, V_{TMR} = 2 V,	1.5	2	2.5	µA
$V_{TMR,RETRY}$	Voltage on timer when the timer starts going back up in retry. Retry version only.	V_{SNS} = 0 V, V_D = 0 V, TMR ↑ = 2 V, TMR ↓, measure V_{TMR} when I into TMR change polarity	0.475	0.5	0.525	V
N_{RETRY}	Number of retry duty cycles. Retry version only.			64		
D_{RETRY}	Retry duty cycle. Retry version only.			0.4%		
$I_{GATE,TIMER}$	Gate Sourcing Current Threshold When timer starts to run.	V_G = 5 V, V_D = 2 V, V_{SNS} ↑, measure I_{GATE} when TMR sources current	5	10	15	µA
$V_{SNS,TMR1}$	Sense Voltage when Timer starts to run.	V_D = 2 V, V_{TMR} = 0 V, V_G = 5 V; V_{SNS} ↑, measure V_{SNS} when TMR sources current	1.5	2.5		mV

Copyright © 2017, Texas Instruments Incorporated

Electrical Characteristics (continued)

–40°C ≤ T_J ≤125°C, 1.1 mA < I_{VCC} < 10 mA, $V_{(UVEN)}$ = 2 V, $V_{(OV)}$ = $V_{(SNS)}$ = $V_{(D)}$ = 0 V, $V_{(SS)}$ = GATEx = Hi-Z , $V_{(TMR)}$ = 0 V, –1 V < $V_{NEG48Vx}$ < 150 V, ; All pin voltages are relative to VEE (unless otherwise noted)

PARAMETER		TEST CONDITIONS	MIN	TYP	MAX	UNIT
$V_{SNS,TMR2}$	Sense Voltage when Timer starts to run.	V_D = 0 V, V_{TMR} = 0 V , V_G = 5 V; V_{SNS} ↑, measure V_{SNS} when TMR sources current	23.25	24.5		mV
SNS – Sense Pin For Current Limit						
$I_{SNS,LEAK}$	Leakage current on sense pin		-2		2	µA
$V_{SNS,CL1}$	Current limit	V_{TMR} = 0 V. V_{GATE} = 5 V. V_D = 0 V V_{SNS} ↑, measure when I_{GATE} = 0;	24	25	26	mV
$V_{SNS,FST}$	fast trip current limit	V_{TMR} = 0 V. V_{GATE} = 5 V. V_D = 0 V. V_{SNS} ↑, measure when I_{GATE}> 100 mA	45	50	55	mV
$V_{SNS,CL2}$	Fold Back Current Limit	V_{TMR} = 0 V, V_{GATE} = 5 V, V_D = 5 V, V_{SNS} ↑, measure when I_{GATE} = 0;	2.25	3	3.75	mV
$V_{SNS,FST2}$	Fast Trip during start-up	V_{TMR} = 0 V, V_{GATE} = 5 V, V_D = 5 V, V_{SNS} ↑, Measure when I_{GATE}> 100 mA	6	9	12	mV
GATE – Gate Drive for Main Hot Swap FET						
$V_{(VCC-GATE)}$	Output gate voltage	$V_{(SNS)}$ = 0 V			1	V
$I_{(GATE,SRS,NORM)}$	Sourcing Current during normal operation.	$V_{(TMR)}$ = 0 V. $V_{(GATE)}$ = 8 V. V_D = 0 V, $V_{(SNS)}$ = 0 V	250	400		µA
$I_{(GATE,SRS,START)}$	Sourcing Current during star-up	$V_{(TMR)}$ = 0 V. $V_{(GATE)}$ = 5 V. V_D = 0 V, $V_{(SNS)}$ = 0 V	15	20	25	µA
$I_{(GATE,wkpd)}$	Weak pull down current	$V_{(SNS)}$ = 0 V. V_{UVEN} = 0 V	3	5	7	mA
$I_{(GATE,FST)}$	Fast Pull down current with 10mV overdrive		0.4	1	1.5	A
D – Drain Sense						
$R_{(D,INT)}$	Resistance from the drain pin to GND.		28.5	30	31.5	kΩ
$V_{(D,CL_SW)}$	Voltage on drain that switches between two current limits	$V_{(TMR)}$ = 0 V, $V_{(GATE)}$ = 5 V, $V_{(SNS)}$ = 20 mV, D↑, measure V when $I_{(GATE)}$ = 0	1.46	1.5	1.54	V
$V_{(D,TMR_SW)}$	Voltage on drain that switches the V_{TMR} threshold.	$V_{(TMR)}$ = 1 V, $V_{(GATE)}$ = 5 V, $V_{(SNS)}$ = 20 mV, D↑, measure V when $I_{(GATE)}$ = 0	0.73	0.75	0.77	V
$V_{(D,TMR_SW,hyst)}$	hysteresis for $V_{(D,TMR,SW)}$	hysteresis		75		mV
SS (Soft Start)						
$I_{(SS,PD)}$	Pull down current when not in inrush	V_{SS} = 5 V	100			mA
$R_{(SS,GATE)}$	Resistance between GATE and SS in the start-up phase			80		Ω
Neg48A, Neg48B						
$I_{(lkg,Neg48x)}$	Leakage current	V_{Neg48x} = –50 mV, GATEx ON	-2		2	µA
		V_{Neg48x} = –100 mV, GATEx ON	-7		7	µA
		V_{Neg48x} = 150 V, GATEx off			30	µA
$V_{(FWD)}$	Forward regulation voltage of the OR-ing controller. V_{FWD} = V_{EE} – $V_{(NEG48Vx)}$		10	25	40	mV
$V_{(FWD,FST)}$	Forward voltage where a fast pull up is activated.	V_{GATEx} = 5 V. V_{VEE} – $V_{Neg48Vx}$ ↑ measure when I_{GATEx} = 100 µA	50	80	105	mV
$V_{(RV)}$	Fast reverse trip voltage.		2	6	10	mV
GATEA, GATEB						
$V_{VCC-GATEx}$	Gate Output Voltage.			0.65	1.1	V

Copyright © 2017, Texas Instruments Incorporated

Electrical Characteristics (continued)

–40°C ≤ T_J ≤125°C, 1.1 mA < I_{VCC} < 10 mA, $V_{(UVEN)}$ = 2 V, $V_{(OV)}$ = $V_{(SNS)}$ = $V_{(D)}$ = 0 V, $V_{(SS)}$ = GATEx = Hi-Z , $V_{(TMR)}$ = 0 V, –1 V < $V_{NEG48Vx}$ < 150 V, ; All pin voltages are relative to VEE (unless otherwise noted)

PARAMETER		TEST CONDITIONS	MIN	TYP	MAX	UNIT
$I_{(GATEx,SRS)}$	Gate sourcing current in regulation	V_{VEE} – $V_{Neg48Vx}$ = 50 mV		5		µA
$I_{(GATEx,SINK)}$	Gate sinking current in regulation	V_{VEE} – $V_{Neg48Vx}$ = 0		5		µA
$R_{GATE,SRC,FST}$	Pull up resistance in fast sourcing mode.	V_{VEE} – $V_{Neg48Vx}$ = 100 mV; Measure current at V_{GATEx} = 0 V. R = $V_{VCC/I}$		10		kΩ
$I_{(GATEx,FST)}$	Fast Gate pull down current	$V_{(VEE)}$ – V_{Neg48x} = –15 mV	0.4	1	1.5	A
PGb (Power Good Bar)						
$V_{(GATE,PGb)}$	Threshold on GATE that triggers PGb to assert.	Raise V_{GATE} until PGb asserts	6.5	7.25	8	V
$V_{(PGb,PD)}$	Pull down strength on PGb	PGb sinking 1 mA			1.5	V
$I_{(PGb,LEAK)}$	leakage current on PGb pin				1	µA
OTSD (Over Temperature Shut Down)						
T_{SD}	Shutdown temperature	Temp Rising	135	155	175	°C
$T_{SD,hyst}$	Shutdown temperature Hysteresis			8		°C

6.6 Switching Characteristics

over operating free-air temperature range (unless otherwise noted)

PARAMETER		TEST CONDITIONS	MIN	TYP	MAX	UNIT
VCC – Clamped Supply						
t_{ID}	Insertion Delay	V_{VCC}: 0 V → 10 V, measure delay before V_{GATE} ↑		32		ms
UVEN						
$T_{UV,degl}$	Deglitch on UVEN			4		µs
OV						
$T_{OV,degl}$	Deglitch on OV			4		µs
SNS						
$T_{SNS,FST,RESP}$	Response time to large over current	V_{SNS} steps from 0 mV to 60 mV. Measure time for GATE to come down.		300		ns
Neg48VA, NEG48VB						
$T_{Neg48Vx,FST,RESP}$	Response time to large reverse current	$V_{NEG48Vx}$ steps from -40 mV to 15 mV. Measure time for GATEx to come down.		300		ns
PGb						
$t_{PGb,DEGL}$	Deglitch of PGb. (raise GATE, measure delay between GATE and PGb)	Power Good ↑ ($V_{(GATE)}$ 0 V → 10 V) Look for PGb ↓		1		ms
		Power Good ↓ ($V_{(GATE)}$ 10 V → 0 V) Look for PGb ↑		32		ms

Copyright © 2017, Texas Instruments Incorporated

6.7 Typical Characteristics

Unless otherwise noted: –40°C ≤ T_J ≤125°C, 1.1 mA < I_{VCC} < 10 mA, $V_{(UVEN)}$ = 2 V, $V_{(OV)}$ = $V_{(SNS)}$ = $V_{(D)}$ = 0 V, $V_{(SS)}$ = GATEx = Hi-Z , $V_{(TMR)}$ = 0 V, –1 V < $V_{NEG48Vx}$ < 150 V , ;

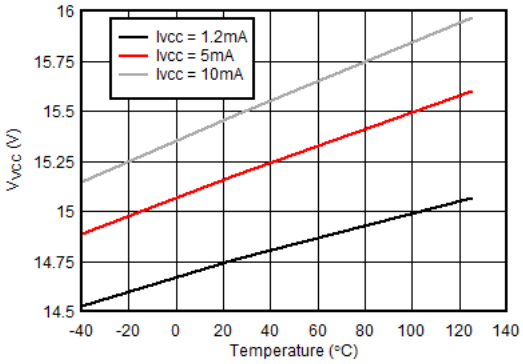

Ivcc injected into VCC pin

Figure 1. VCC Regulation Voltage vs Current and Temperature

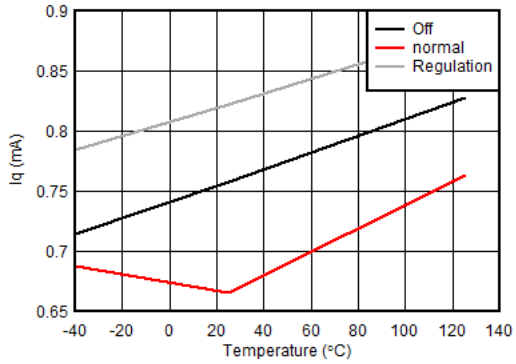

V_{VCC} = 10 V, Regulation is current limit

Figure 2. Iq vs Temperature and Operating Condition

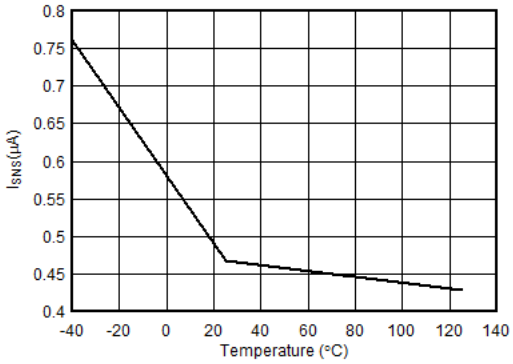

Figure 3. I_{sns} Current Vs Temperature

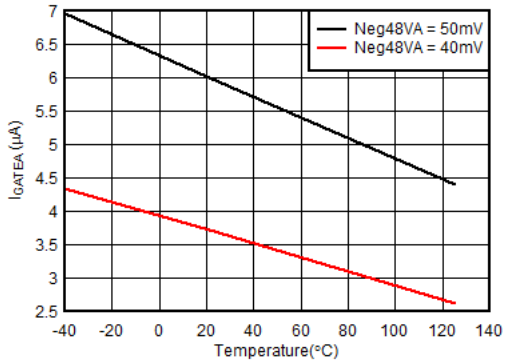

Figure 4. I_{GATEA} vs Temperature

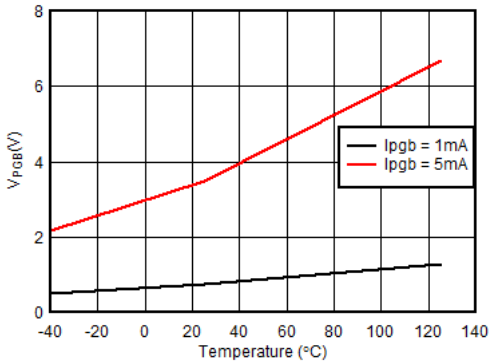

In Power Good

Figure 5. Vpgb vs Temperature

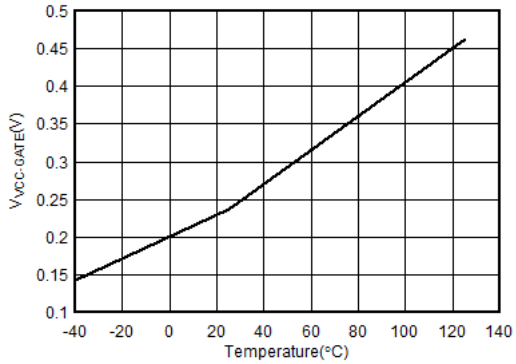

Figure 6. $V_{VCC-GATE}$ vs Temperature

7 Parameter Measurement Information

7.1 Relationship between Sense Voltage, Gate Current, and Timer

The diagram below illustrates the relationship between the V_{SNS} (voltage across R_{SNS}), Gate current, and the timer operation. The diagram is intended to help explain the various parameters in the electrical characteristic table and is not drawn to scale.

Note that I_{GATE} reduces as the sense voltage approaches the current limit threshold and it equals zero at the current limit regulation point. To ensure that the timer always runs when the IC is in regulation the timer starts at a slightly positive I_{GATE}.

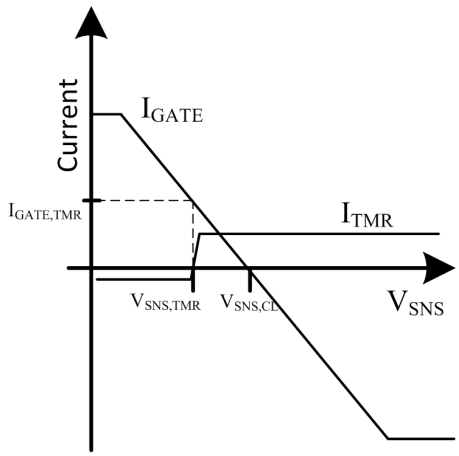

Figure 7. Relationship Between Timer, Gate Current, and Sense Voltage (V_{GATE} = 5 V)

Copyright © 2017, Texas Instruments Incorporated

8 Detailed Description

8.1 Overview

The TPS23525 is an integrated hot swap and Dual OR-ing controller that enables high power telecom systems to comply with stringent transient requirements. The soft start cap disconnect allows soft start at start-up and disconnects the soft start cap during normal operation. This allows for the use of smaller hot swap FETs without hurting the transient response. The 400 µA sourcing current allows fast recovery, which helps to avoid system resets during lightning surge tests. The dual current limit makes it easier to pass brown outs and input steps such as required by the ATIS 0600315.2013. Finally, the TPS23525 offers accurate under voltage and over voltage protection with programmable thresholds and hysteresis.

The TPS23525 integrates a dual OR-ing controller, making it ideal for –48 V systems fed by two redundant supplies.The OR-ing controller will turn off if any reverse current is detected.

8.2 Functional Block Diagram

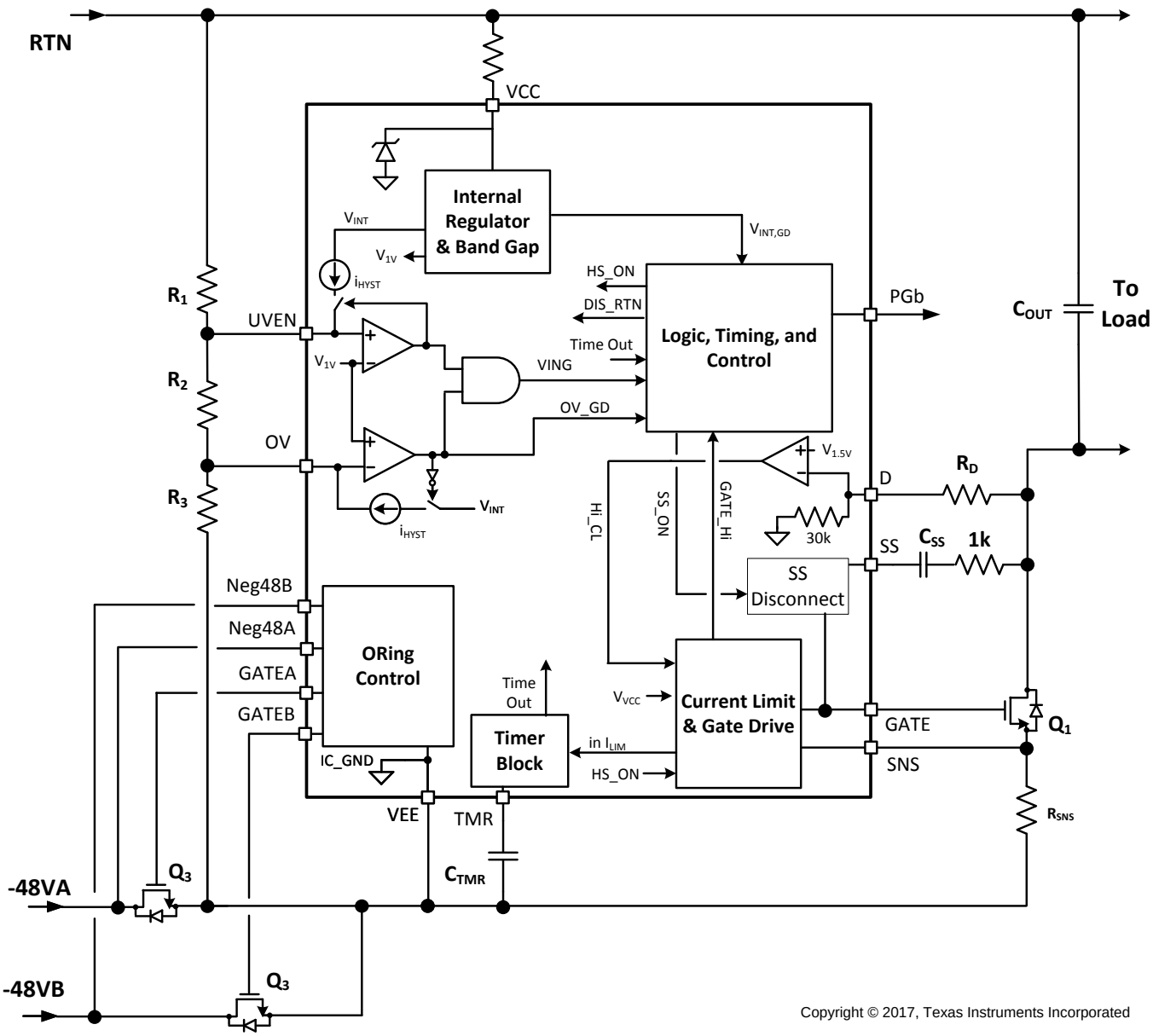

8.3 Feature Description

8.3.1 Current Limit

The TPS23525 utilizes two current limit thresholds:

- I_{CL1} – also referred to as high current limit threshold, which is used when the V_{DS} of the hot swap FET is low.
- I_{CL2} – lower current limit threshold, which is used when the V_{DS} of the hot swap FET is high.

This dual level protection scheme ensures that the part has a higher chance of riding out voltage steps and other transients due to the higher current limit at low V_{DS}, while protecting the MOSFET during start into short and hot-short events, by setting a lower current limit threshold for conditions with high $V_{DS.}$ The transition threshold is programmed with a resistor that is connected from the drain of the hot swap FET to the D pin of the TPS23525. The figure below illustrates an example with a I_{CL1} set to 25 A and I_{CL2} set to 3 A. Note that compared to a traditional SOA protection scheme this approach allows better utilization of the SOA in the 10 V < $V_{DS.}$ < 40-V range, which is critical in riding through transients and voltage steps.

Note that in both cases the TPS23525 regulated the gate voltage to enforce the current limit. However, this regulation is not very fast and doesn't offer the best protection against hot-shorts on the output. To protect in this scenario a fast comparator is used, which quickly pulls down the gate in case of severe over current events (2x bigger than V_{CL1}).

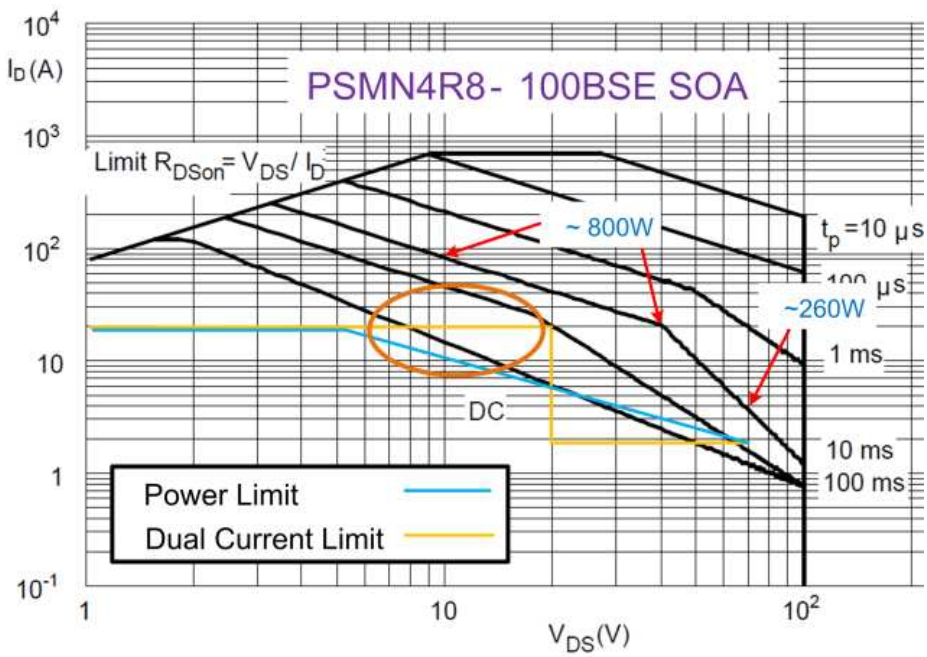

Figure 8. Dual Current Limit vs FET Power Limit

8.3.1.1 Programming the CL Switch-Over Threshold

The V_{DS} threshold when the TPS23525 switches over from I_{CL1} to I_{CL2} ($V_{D,SW}$) can be computed using Equation 1. For example, if a 15-V switch over is desired, R_D should be set to 270 kΩ.

$$V_{DS,SW} = \frac{1.5\ V \times \left(30\ k\Omega + R_D\right)}{30\ k\Omega} \tag{1}$$

8.3.1.2 Programming CL1

The current limit at low V_{DS} (I_{CL1}) of the TPS23525 can be computed using Equation 2 below.

$$I_{CL1} = \frac{V_{SNS,CL1}}{R_{SNS}} \tag{2}$$

Copyright © 2017, Texas Instruments Incorporated

Feature Description (continued)

To compute I_{CL1} for a 1-mΩ sense resistor use Equation 3 below.

$$I_{CL1} = \frac{V_{SNS,CL1}}{R_{SNS}} = \frac{25\ mV}{1\ m\Omega} = 25\ A \tag{3}$$

8.3.1.3 Programming CL2

The current limit at high V_{DS} (I_{CL2}) of the TPS23525 can be computed using Equation 4 below.

$$I_{CL2} = \frac{V_{SNS,CL2}}{R_{SNS}} \tag{4}$$

To compute I_{CL2} for a 1-mΩ sense resistor use Equation 5 below.

$$I_{CL2} = \frac{V_{SNS,CL2}}{R_{SNS}} = \frac{3\ mV}{1\ m\Omega} = 3\ A \tag{5}$$

8.3.1.4 Computing the Fast Trip Threshold

The fast trip threshold is set to 2x the I_{CL1} when operating at low V_{DS} and its set to 3x the I_{CL2} when operating at high V_{DS}.

8.3.2 Soft Start Disconnect

The inrush current into the output capacitor (C_{OUT}) can be limited by placing a capacitor between the SS (Soft Start) pin and the drain of the hot swap MOSFET. In that case the inrush current can be computed using equation below.

$$I_{INR} = \frac{C_{OUT} \times I_{GATE,SRS,START}}{C_{SS}} = \frac{660\ \mu F \times 20\ \mu A}{33\ nF} = 0.4\ A \tag{6}$$

Note that with most hot swap the C_{SS} pin is tied simply to the gate pin, but this can interfere with performance during normal operation if transients or short circuits are encountered. In addition the C_{SS} capacitor tends to pull up the gate during hot plug and cause shoot through current if it is always tied to the gate. For that reason the TPS23525 has a disconnect switch between the gate pin and the SS pin as well as a discharge resistor. During the initial hot plug and during the insertion delay the switch between SS and GATE is open and SS is being discharged to GND through a resistor. Then during start-up SS and GATE are connected to limit the slew rate. Once in normal operation the SS pin is not tied to GATE and it is not shorted to GND, which prevents it from interfering with the operation during transients.

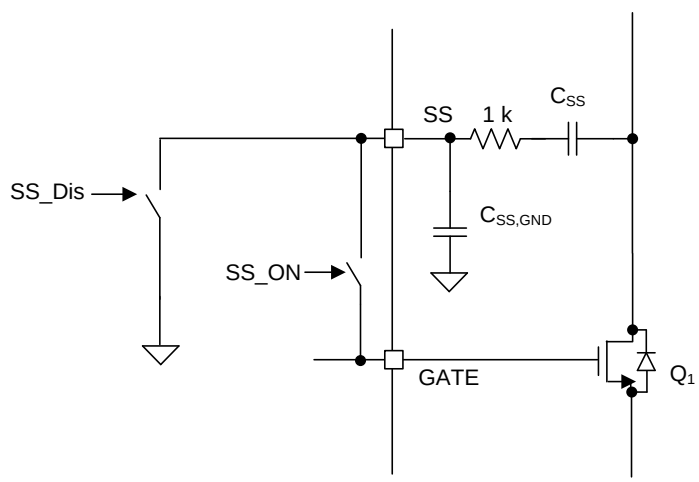

Figure 9. Implementation of SS Disconnect

Feature Description (continued)

8.3.3 Timer

Timer is a critical feature in the hot swap, which manages the stress level in the MOSFET. The timer will source and sink current into the timer capacitor as follows:

- Not in current limit: sink 2 µA
- If the part is in current limit and $V_{GATE} < V_{GATE,TH}$, the timer sources current as follows:
  - $V_D < V_{D,CL_SW}$: source 10 µA
  - $V_D > V_{D,CL_SW}$: source 50 µA

The TPS23525 times out and shuts down the hot swap as follows.

- If $V_D < V_{D,TMR_SW}$ then the hot swap times out when V_{TMR} reaches 1.5 V.
- If $V_D > V_{D,TMR_SW}$ then the hot swap times out when V_{TMR} reaches 0.75 V.

The above behavior maximizes the ability of the hot swap to ride out voltage steps, while ensuring that the FET remains safe even if the part can not ride out a voltage step.

A cool down period follows after the part times out. During this time the timer performs the following:

- Discharge C_{TMR} with a 2-µA current source until 0.5 V
- Charge C_{TMR} with a 10-µA current source until it is back to 1.5 V.
- Repeat the above 64 times
- Discharge timer to 0 V.

The part attempts to restart after finishing the above. If the UVEN signal is toggled while the 64 cycles are in progress the part restarts immediately after the 64 cycles are completed.

The timer operates as follows when recovering from POR:

- If $V_{TMR} < 0.5$ V:
  - Proceed to regular startup
  - Do not discharge V_{TMR}
- If $V_{TMR} > 0.5$ V:
  - Go through 64 charge/discharge cycles
  - Discharge V_{TMR}
  - Proceed to startup

The Time Out (T_{TO}) can be computed using the equations below. Note that the time out depends on the V_{DS} of the MOSFET.

$$T_{TO} = \frac{C_{TMR} \times V_{TMR}}{I_{TMR,SRS}} \tag{7}$$

$$T_{TO}(V_D < 0.75\ V) = \frac{C_{TMR} \times 1.5\ V}{10\ \mu A} \tag{8}$$

$$T_{TO}(0.75\ V < V_D < 1.5\ V) = \frac{C_{TMR} \times 0.75\ V}{10\ \mu A} \tag{9}$$

$$T_{TO}(V_D > 1.5\ V) = \frac{C_{TMR} \times 0.75\ V}{50\ \mu A} \tag{10}$$

Copyright © 2017, Texas Instruments Incorporated

Feature Description (continued)

8.3.4 OR-ing

The TPS23525 features integrated OR-ing that controls the external MOSFET in a way to emulate an ideal diode. The TPS23525 will regulate the forward drop across the OR-ing FET to 25 mV. This is accomplished by controlling the V_{GS} of the MOSFET. As the current decreases the V_{GS} is also decreased, which effectively increases the R_{DSON} of the MOSFET. This process is regulated with a low gain amplifier that is gate (OR-ing FET) pole compensated. The lower gain helps ensure stability over various operating conditions. The regulating amplifier ensures that there is no DC reverse current.

However, the amplifier is not very fast and thus it is paired with a fast comparator. This comparator quickly turns off the FET if there is significant reverse current detected.

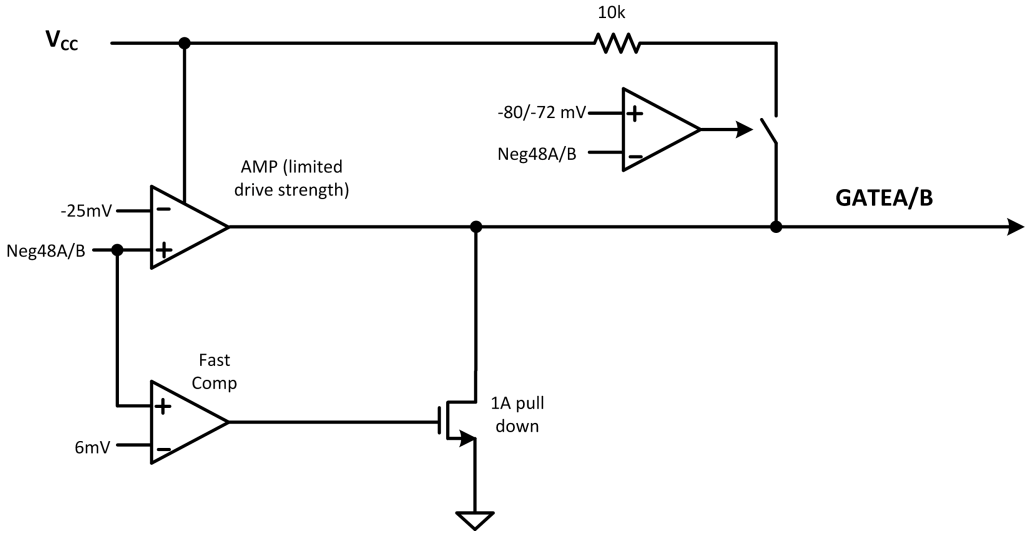

Figure 10. Simplified Diagram of OR-ing Block

8.4 Device Functional Modes

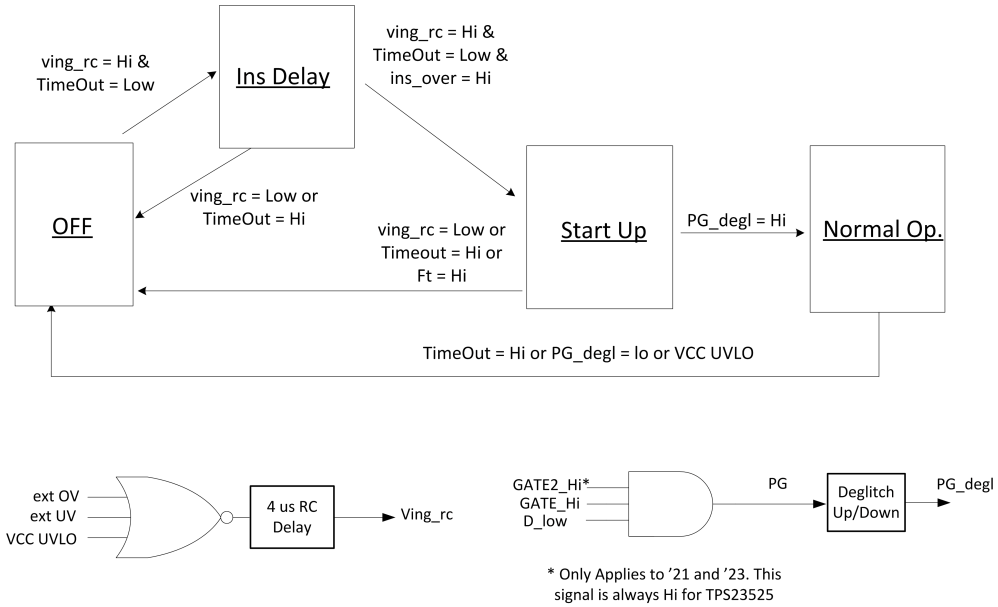

Figure 11. Simplified Hot Swap State Machine

Device Functional Modes (continued)

The Figure above shows a simplified state machine of the hot swap controller. It has 4 distinct operating states and the controller switches between these states based on the following signals:

- Ving_rc: This means that both the input voltage is in the right range and the IC has power with Vcc. A 4-µs delay is added for deglitching. If the input voltage is above the OV threshold, input voltage is below the UV threshold, or VCC is below its internal UVLO, Ving_rc will be low.
- TimeOut: This signal comes from the timer block and will be asserted Hi if the IC has timed out due to an over-current condition. This signal is also Hi while the timer is going through the restart cycles. Once the cycles are completed this signal will go Low.
- ins_over: This signal states that the insertion delay has been completed and the hot swap is ready to start-up.
- FT: this is the fast trip signal coming from the fast trip comparator. It goes Hi if an extreme over current event is detected.
- PG: Internal Power good signal. This is high when the hot swap is fully on and the load can draw full power. For PG to be Hi, the GATE has to be Hi and the drain pin needs to be below 0.75 V.
- PG_degl: This is a deglitched version of the PG and is the signal used to move between states and controls the external PGb pin.

8.4.1 OFF State

In this state the hot swap FET is turned off and the controller is waiting to start-up. The controller can be in this state due to any of these scenarios:

- Input voltage is not in the valid range.
- The hot swap is in the cool down state and the timer is going through the retry cycle after a fault condition such as output hot short or over current.
- VCC is below its UVLO threshold and the IC doesn't have enough power to operate properly.

8.4.2 Insertion Delay State

In this state the hot swap FET is turned off and the controller is waiting for the insertion delay to finish. This allows the input supply to settle after a Hot Plug. If any of the following occur, the controller will be kicked back to the OFF state:

- Input voltage is not in the valid range.
- VCC is below its UVLO threshold and the IC doesn't have enough power to operate properly.

Once the insertion delay is finished, the controller will move to the Start-up state.

8.4.3 Start-up State

In this state the controller is turning on and charging the output cap. The operation is set as follows:

- The SS pin is internally connected to the GATE pin to allow for output dv/dt control.
- Lower gate sourcing current is applied to the GATE pin to allow for smaller SS caps.
- The lower current limit setting of $V_{SNS,CL2}$ and a lower fast trip setting of $V_{SNS,FST2}$ is used to minimize the MOSFET stress in case of a fault condition.

If any of the following occur, the controller will be kicked back to the OFF state:

- Input voltage is not in the valid range.
- The timer times out due to over-current.
- VCC is below its UVLO threshold and the IC doesn't have enough power to operate properly.
- Fast trip is triggered.

Once the PG_degl signal goes Hi, the controller will move to the Normal Operation state.

8.4.4 Normal Operation State

In this state the hot swap is fully on and the operation is set as follows:

- The SS pin is disconnected from the GATE pin to improve transient response.
- The full gate sourcing current is used to improve transient response.
- The current limit and fast trip threshold are a function of the D pin to optimize the transient response while protecting the MOSFET.

Copyright © 2017, Texas Instruments Incorporated

Device Functional Modes (continued)

If any of the following occur, the controller will be kicked back to the OFF state:

- • PG_degl goes low.
- The timer times out due to over-current.
- VCC is below its UVLO threshold and the IC doesn't have enough power to operate properly.

Note that if the input voltage is outside the valid range or the fast trip is triggered, the hot swap FET will turn off, but the controller will not exit the Normal Operation state. In this case the PG signal would go low immediately. If this condition persists, the PG_degl will go low as well and the controller would move to the OFF state. This operation prevents the controller from re-starting the system during quick transients.

9 Application and Implementation

NOTE

Information in the following applications sections is not part of the TI component specification, and TI does not warrant its accuracy or completeness. TI's customers are responsible for determining suitability of components for their purposes. Customers should validate and test their design implementation to confirm system functionality.

9.1 Application Information

The TPS23525 is a hot swap controller for –48-V applications and is used to manage inrush current and protect downstream circuitry and the upstream bus in case of fault conditions. The following key scenarios should be considered when designing a –48-V hot swap circuit:

- Start Up.
- Output of a hot swap is shorted to ground while the hot swap is on. This is often referred to as a Hot Short.
- Powering up a board when the output and ground are shorted. This is usually called a start-into-short.
- Input lightning surge. Here it is usually desired to avoid damage to downstream circuitry and to avoid system restarts.

These scenarios place a lot of stress on the hot swap MOSFET and the board designer should take special care to ensure that the MOSFET stays within it's Safe Operating Area (SOA) under all of these conditions. A detailed design example is provided below and the key equations are written out. Note that solving all of these equations by hand is cumbersome and can result in errors. Instead, TI recommends using the TPS2352X Design Calculator provided on the product page.

9.2 Typical Application

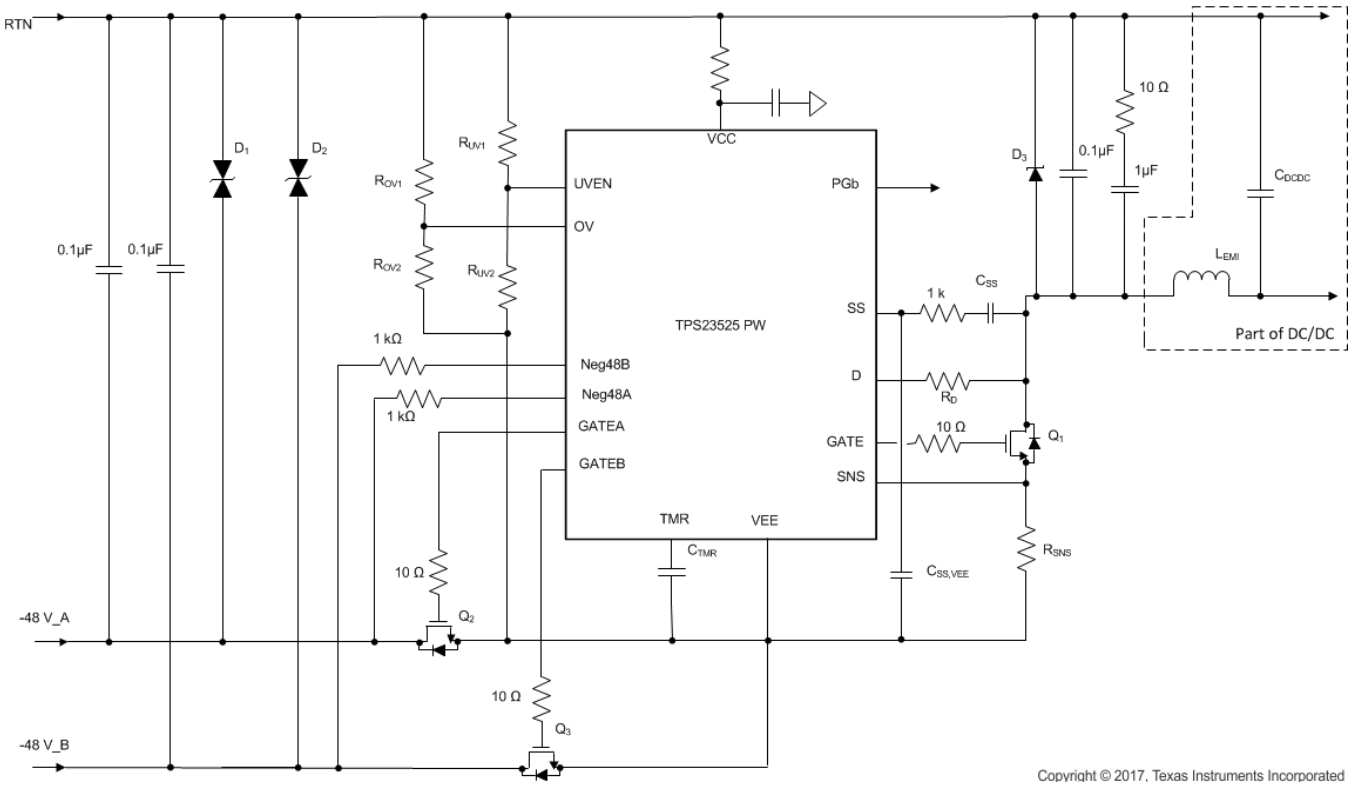

Figure 12. Application Diagram for Design Example

Copyright © 2017, Texas Instruments Incorporated

Typical Application (continued)

9.2.1 Design Requirements

The table below summarizes the design parameters that must be known before designing a hot swap circuit. When charging the output capacitor through the hot swap MOSFET, the FET's total energy dissipation equals the total energy stored in the output capacitor ($1/2CV^2$). Thus both the input voltage and output capacitance will determine the stress experienced by the MOSFET. The maximum load power will drive the current limit and sense resistor selection. In addition, the maximum load current, maximum ambient temperature, and the thermal properties of the PCB ($R_{\theta CA}$) will drive the selection of the MOSFET's R_{DSON} and the number of MOSFETs used. $R_{\theta CA}$ is a strong function of the layout and the amount of copper that is connected to the drain of the MOSFET. Air cooling will also reduce $R_{\theta CA}$ substantially. Finally, it's important to know what transients the circuit has to pass in order to size up the input protection accordingly.

Table 1. Design Requirements for a –38 V to –60 V, 400-W Protection Circuit

DESIGN PARAMETER	EXAMPLE VALUE
Input voltage range	–38 V to –60 V
Maximum Load Power	400 W
Output Capacitance	660 µF
Location of Output Cap	After EMI filter with ~5 µH of inductance.
Maximum Ambient Temperature	85°C
MOSFET $R_{\theta CA}$ (function of layout)	20°C/W
Pass "Hot-Short" on Output?	Yes
Pass a "Start into short"?	Yes
Is the load off until PG asserted?	Yes
Max Input Inductance	10 µH
Level of IEC61000-4-5 to pass	2-kV Line to Line with 2-Ω series impedance
Pass Reverse Hook Up	Yes

9.2.2 Detailed Design Procedure

9.2.2.1 Selecting R_{SNS}

Before selecting R_{SNS}, first compute the maximum load current. For this example the worst case load current happens at the minimum input voltage of 38 V. Thus the maximum current is 400 W/38 V = 10.5 A. To provide some margin, set the target current limit to 12 A and compute R_{SNS} using equation below:

$$R_{SNS,CLC} = \frac{V_{SNS,CL1}}{I_{CL1}} = \frac{25\ \text{mV}}{12\ \text{A}} = 2.08\ \text{m}\Omega \tag{11}$$

Use next available R_{SNS} of 2 mΩ.

9.2.2.2 Selecting Soft Start Setting: C_{SS} and $C_{SS,VEE}$

First, compute the minimum inrush current where the timer will trip using equation below.

$$I_{INR,TMR} = \frac{V_{SNS,TMR2}}{R_{SNS}} = \frac{1.5\ \text{mV}}{2\ \text{m}\Omega} = 0.75\ \text{A} \tag{12}$$

To avoid running the timer the inrush current needs to be sufficiently low. Target 0.4 A of inrush current to allow margin, and compute the target C_{SS} using equation below.

$$c_{SS} = \frac{c_{OUT,MAX} \times I_{GATE,SRS,START}}{I_{INR,TGT}} = \frac{792\ \mu\text{F} \times 20\ \mu\text{A}}{0.4\ \text{A}} = 39.6\ \text{nF} \tag{13}$$

Next choose, the next available C_{SS} greater than 39.6 nF. For this example 43 nF was used, which assumes a 33 nF and 10 nF cap in parallel. This results in an inrush current of 0.37 A at max C_{OUT} (792 µF) and inrush current of 0.31 A at typical C_{OUT} (660 µF). Also it is recommended to add a capacitor between the soft start pin and VEE ($C_{SS,VEE}$) to improve immunity to input voltage noise during soft start. It's recommended to chose a capacitor that's 3x larger than C_{SS}. In this case a 150 nF capacitor was chosen.

Finally the start-up time at maximum input voltage can be computed using the equation below:

$$T_{START}\left(V_{IN,MAX}\right) = \frac{c_{SS} \times V_{IN,MAX}}{I_{GATE,SRS,START}} = \frac{43\,nF \times 60\,V}{20\,\mu A} = 129\ ms \tag{14}$$

9.2.2.3 Selecting V_{DS} Switch Over Threshold

The V_{DS} threshold where the current limit switches from CL1 to CL2 can be programmed using R_D. In general a higher threshold improves ability to ride through voltage steps, brown outs, and other transients. However, a larger setting can also expose the MOSFET to more stress, because the larger current limit is now allowed at higher V_{DS} voltages. If there are no specific voltage step requirements, 20 V is a good starting point. Use the equation below to compute the target R_D.

$$R_D = 30\ k\Omega \times \left(\frac{V_{DS,SW}}{1.5\ V} - 1\right) = 370\ k\Omega \tag{15}$$

9.2.2.4 Timer Selection

The timer determines how long the hot swap can be in current limit before timing out and can be programmed using C_{TMR}. In general a longer time out (T_{TO}) improves ability to ride through voltage steps, brown outs, and other transients. However, a larger setting can also expose the MOSFET to more stress, because it takes longer for the FET to shut down during fault conditions. If there are no specific voltage step or transient requirements, 2 ms is a good starting point. Use the equation below to compute the target C_{TMR}. Choose the next available capacitor value of 15 nF, which results in a 2.25 ms time out.

$$C_{TMR} = \frac{T_{TO} \times I_{TMR,SRS}}{V_{TMR}} = \frac{2\ ms \times 10\ \mu A}{1.5\ V} = 13.3\,nF \tag{16}$$

9.2.2.5 MOSFET Selection and SOA Checks

When selecting MOSFETs for the –48 V application the three key parameters are: V_{DS} rating, R_{DSON}, and safe operating area (SOA). For this application the CSD19535KTT was selected to provide a 100 V V_{DS} rating, low R_{DSON}, and sufficient SOA. After selecting the MOSFET, it is important to double check that it has sufficient SOA to handle the key stress scenarios: start-up, output Hot Short, and Start into Short. MOSFET's SOA is usually specified at a case temperature of 25°C and should be derated based on the maximum case temperature expected in the application. Compute the maximum case temperature using the equation below. Note that the R_{DSON} will vary with temperature and solving the equation below could be a repetitive process. The CSD19535KTT, has a maximum 3.4 mΩ R_{DSON} at room temperature and is ~1.5x higher at 100°C. N stands for the number of MOSFETs used in parallel.

$$T_{C,MAX} = T_{A,MAX} + R_{\theta CA} \times \left(\frac{I_{LOAD,MAX}}{N}\right)^2 \times R_{DSON}\left(T_J\right) \tag{17}$$

$$T_{C,MAX} = 85\ °C + 20°\frac{C}{W} \times \left(10.5\ A\right)^2 \times \left(3.4 \times 1.5\ m\Omega\right) = 96.3\ °C \tag{18}$$

Copyright © 2017, Texas Instruments Incorporated

Next the stress the MOSFET will experience during operation should be compared to the FETs capability. First, consider the power up. The inrush current with max C_{OUT} will be 0.37 A and the inrush will last for 129 ms. Note that the power dissipation of the FET will start at $V_{IN,MAX} \times I_{INR}$ and reduce to zero as the V_{DS} of the MOSFET is reduced. The SOA curve of a typical MOSFET assume the same power dissipation for a given time. A conservative approach is to assume an equivalent power profile where $P_{FET} = V_{IN,MAX} \times I_{INR}$ for t = Tstart-up /2. In this instance, the SOA can be checked by looking at a 60 V, 0.4 A, 64.5 ms pulse. Based on the SOA of the CSD19535KTT, it can handle 60 V, 1.8 A for 10 ms and it can handle 60 V, 1 A for 100 ms. The SOA at T_C = 25°C for 64.5 ms can be extrapolated by approximating SOA vs time as a power function as shown in equations below:

$$I_{SOA}(t) = a \times t^{m} \tag{19}$$

$$m = \frac{\ln\left(I_{SOA}(t_1) / I_{SOA}(t_2)\right)}{\ln(t_1 / t_2)} = \frac{\ln\left(\frac{1.8\ \text{A}}{1\ \text{A}}\right)}{\ln\left(\frac{10\ \text{ms}}{100\ \text{ms}}\right)} = -0.25 \tag{20}$$

$$a = \frac{I_{SOA}(t_2)}{t_2^{m}} = \frac{1\ \text{A}}{(100\ \text{ms})^{-0.25}} = 3.16\ \text{A} \times (\text{ms})^{0.25} \tag{21}$$

$$I_{SOA}(64.5\ \text{ms}, 25\ °\text{C}) = 3.16\ \text{A} \times (\text{ms})^{0.52} \times (64.5\ \text{ms})^{-0.25} = 1.12\ \text{A} \tag{22}$$

Finally, the FET SOA needs to be derated based on the maximum case temperature as shown below. Note that the FET can handle 0.59 A, while it will have 0.37 A during start-up. Thus there is a lot of margin during this test condition.

$$I_{SOA}(64.5\ \text{ms}, T_{C,MAX}) = 1.12\ \text{A} \times \frac{175\ °\text{C} - 96.3\ °\text{C}}{175\ °\text{C} - 25\ °\text{C}} = 0.59\ \text{A} \tag{23}$$

A similar approach should be taken to compute the FETs SOA capability during a Hot Short and start into short. As shown in the following figure, during a start into short the gate is coming up very slowly due to a large capacitance tied to the gate through the SS pin. Thus it is more stressful than a Hot Short and should be used for worst case SOA calculations. To compare the FET stress during start-up into short to the SOA curves the stress needs to be approximated as a square pulse as showing in the figure below. In this example, the stress is approximated with a 1.1 ms (Teq), 1.5 A, 60 V pulse. The FET can handle 6 A, 60 V for 1 ms and 1.8 A, 60 V for 10 ms. Using approximation and temp derating as shown earlier, the FET's capability can be computed as 3 A, 60 V, for 1.1 ms at 96°C. 3 A is significantly larger than 1.5 A implying good margin.

Figure 13. Teq During a Start Into a Short

The final operating point to check is the operation with high current and V_{DS} just below the $V_{DS,SW}$ threshold. In this example, the time out would be 1.1ms (one half of the time out at Vd = 0 V), the current will be 12.5 A, and the voltage would be 20 V. Looking up the SOA curve, the FET can handle 30 A, 20 V for 1 ms and 10 A, 20 V for 10 ms. Repeating previously shown approximations and temp derating, the FET's capability is computed to be 16 A, 20 V, for 1.1 ms at 96°C. Again this is below the worst case operating point of 12.5 A and 20 V suggesting good margin.

9.2.2.6 Input Cap, Input TVS, and OR-ing FET selection

This design example is sized for an application that needs to pass a 2 kV, 2Ω lightning strike per IEC61000-4-5. This equates to almost 1000 A of input current that needs to be clamped. In addition, the design needs to pass reverse hook up and thus the TVS needs to be bi directional. A ceramic transient voltage suppressor (2x B72540T6500S162) CT2220K50E2G was used to clamp this huge surge of current. According to it's datasheet it can clamp 500 A of current to 150 V. Note that the lightning strike can be positive or negative. The worst case voltage is dropped across the OR-ing FETs when the strike is positive (–48 V line goes above RTN). If the output of the OR-ing is –48 V and the input goes to +150 V that is a 200 V drop. Thus BSC320N20NS3 was chosen for the OR-ing FETs. This is a 200 V FET with a 32 mΩ R_{DSON} at room temperature. 2 of these were used in parallel to minimize power loss and manage thermal. Finally a 0.1 µF input bypass cap is recommended.

9.2.2.7 EMI Filter Consideration

In this example it is assumed that the EMI filter is right after the hot swap and the bulk cap is after the EMI filter. The EMI filter adds significant inductance and needs to be accounted for. During a Hot Short, the inductor builds up significant current that needs to go somewhere after the FET opens. For that a free wheeling diode should be used along with a snubber. For this example a 150 V, SMA diode was used: STPS1150A. The snubber consisted of a 10-Ω resistor in series with a 1-µF ceramic capacitor. In addition a 0.1-µF ceramic cap was tied directly on the output.

Copyright © 2017, Texas Instruments Incorporated

9.2.2.8 Under Voltage and Over Voltage Settings

Both the threshold and hysteresis can be programmed for under voltage and over voltage protection. In general the rising UV threshold should be set sufficiently below the minimum input voltage and the falling OV threshold should be set sufficiently above the maximum input voltage to account for tolerances. For this example a rising UV threshold of 37 V and a falling UV threshold of 35 V was chosen as the target. First, choose R_{UV1} based on the 2 V UV hysteresis as shown below.

$$R_{UV1} = \frac{V_{UV,hyst,tgt}}{i_{UV,hyst}} = \frac{2\ V}{10\ \mu A} = 200\ k\Omega \tag{24}$$

Once R_{UV1} is known R_{UV2} can be computed based on the target rising UV threshold as shown below.

$$R_{UV2} = \frac{R_{UV1}}{V_{UV,TGT,Rising} - 1\ V} = \frac{200\ k\Omega}{37\ V - 1\ V} = 5.56\ k\Omega \tag{25}$$

The OV setting can be programmed in a similar fashion as shown in equations below.

$$R_{OV1} = \frac{V_{OV,hyst,tgt}}{i_{OV,hyst}} = \frac{3\ V}{10\ \mu A} = 300\ k\Omega \tag{26}$$

(27)

$$R_{OV2} = \frac{R_{OV1}}{V_{OV,TGT,Rising} - 1\ V} = \frac{300\ k\Omega}{65\ V - 1\ V} = 4.68\ k\Omega \tag{28}$$

Optional filtering capacitors can be added to the UV and OV to improve immunity to noise and transients on the input bus. These should be tuned based on system requirements and input inductance. In this example place holders were added to the PCB, but the components were not populated.

9.2.2.9 Choosing R_{VCC} and C_{VCC}

The VCC is used as internal supply rail and is a shunt regulator. To ensure stability of internal loop a minimum of 0.1 µF is required for C_{VCC}. To ensure reasonable power on time it is recommended to keep C_{VCC} below 1 µF. R_{VCC} should be sized in such a way to ensure that sufficient current is supplied to the IC at minimum operating voltage corresponding to the falling UV threshold. To allow for some margin it is recommended that the current through R_{VCC} is at least 1.2x of $I_{Q,MAX}$ when RTN = Falling UV threshold and VCC = 10 V (minimum recommended operating voltage on VCC). For this example R_{VCC} of 16.2 kΩ was used.

9.2.2.10 Power Good Interface to Downstream DC/DC

It's critical to keep the downstream DC/DC off while the hot swap is charging the bulk capacitor. This can be accomplished through the PGb pin. Note that the VEE of the hot swap and the DC/DC are different and the Power Good can not be directly tied to the EN or UV of the DC/DC. The application circuit below provides a simple way to control the downstream converter with the PGb pin of the hot swap.

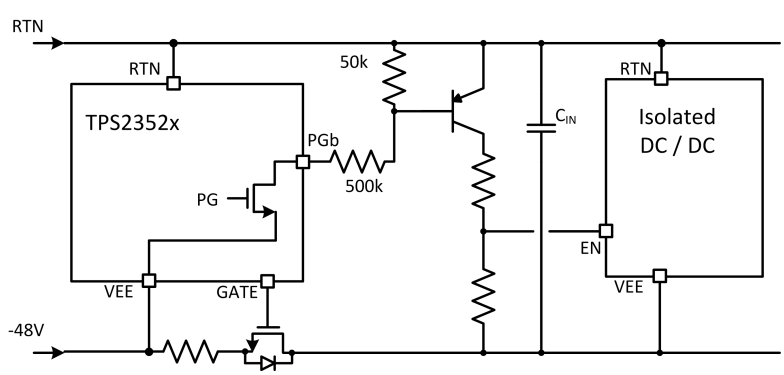

Figure 14. Interface to DC/DC

9.2.3 Application Curves

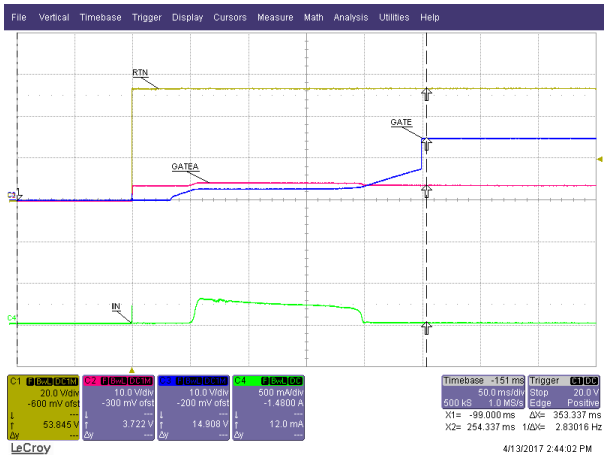

No Load, Scope GND = -48V_A

Figure 15. Start Up (Vin = 54 V)

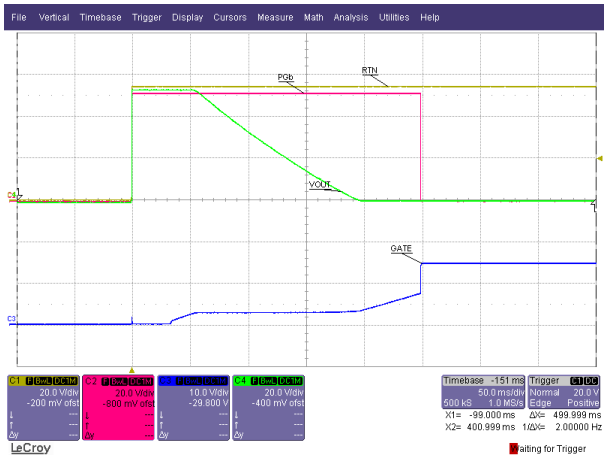

No Load, Scope GND = -48V_A

Figure 16. Start Up (Vin = 54 V)

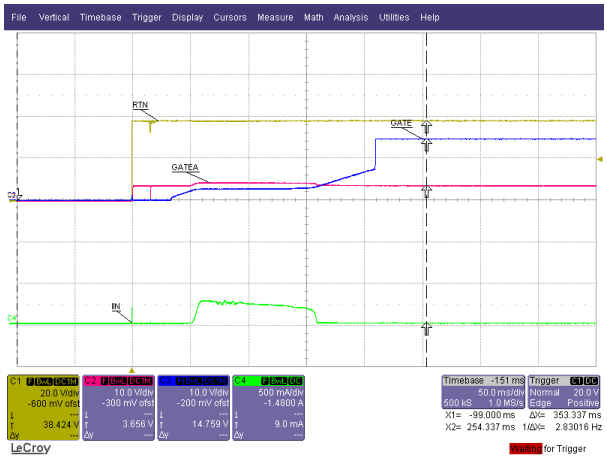

No Load, Scope GND = -48V_A

Figure 17. Start Up (Vin = 38 V)

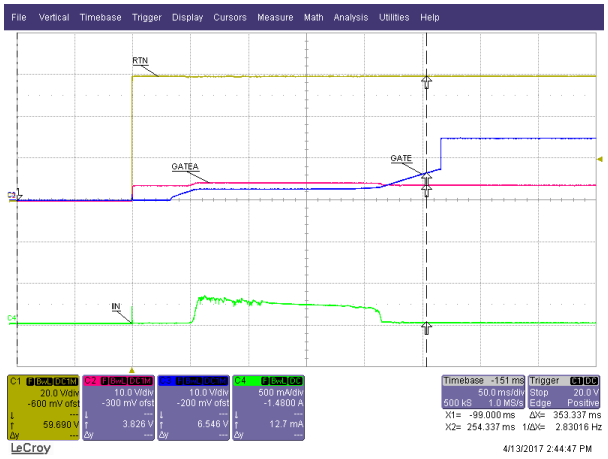

No Load, Scope GND = -48V_A

Figure 18. Start Up (Vin = 60 V)

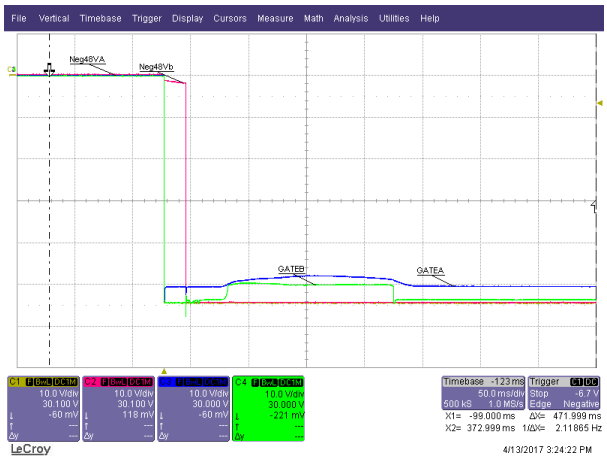

VinA = 54 V, VinB = 54 V, No Load, Scope GND = RTN

Figure 19. Hot Plug Channel A and B Together

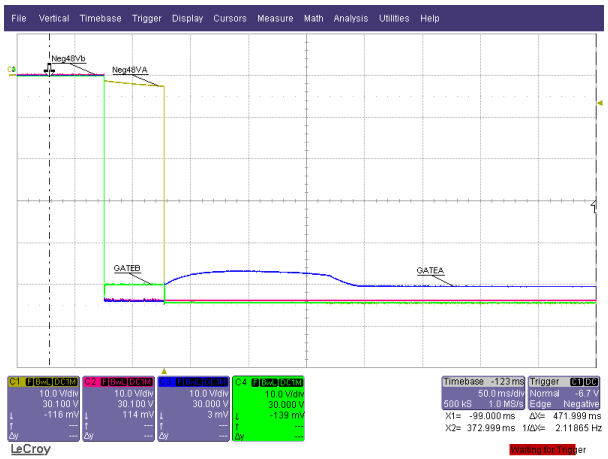

VinA = 54.5 V, VinB = 54 V, No Load, Scope GND = RTN

Figure 20. Hot Plug Channel A and B Together

Copyright © 2017, Texas Instruments Incorporated

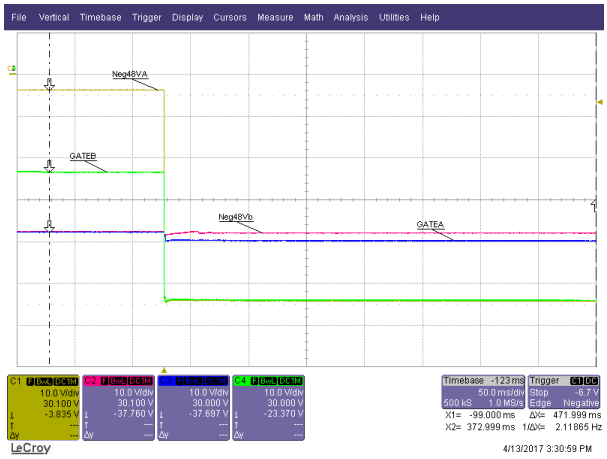

VinA = 54 V; VinB = 38 V, Scope GND = RTN, Iload = 5 A

Figure 21. Hot Plug A after B

VinA = 54 V; VinB = 38 V, Scope GND = RTN, Iload = 5 A

Figure 22. Hot Plug A after B

VinA = 54 V; VinB = 38 V, Scope GND = RTN, Iload = 5 A

Figure 23. Hot Plug A after B

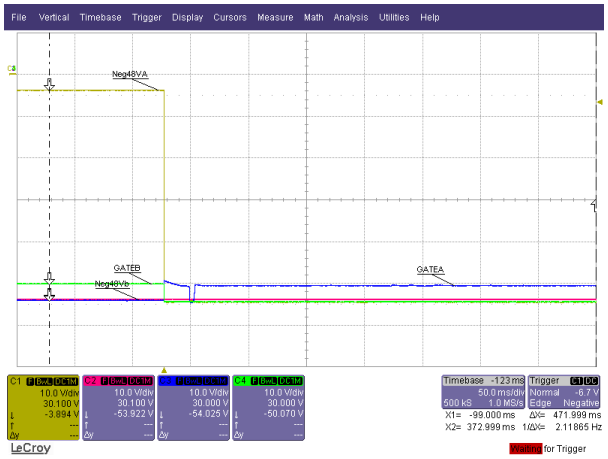

VinA = 54.5 V; VinB = 54 V, Scope GND = RTN, No load

Figure 24. Hot Plug A after B

Scope GND = -48V_B, No Load, After Inductor

Figure 25. Output Hot Short (VinB = 54 V)

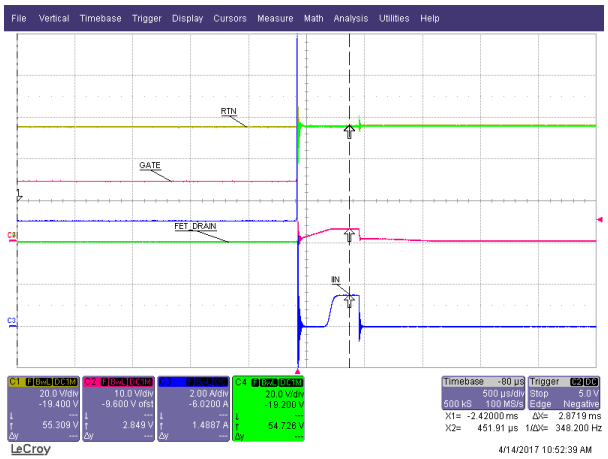

Scope GND = -48V_B, 5-A Load, After Inductor

Figure 26. Output Hot Short (VinB = 54 V)

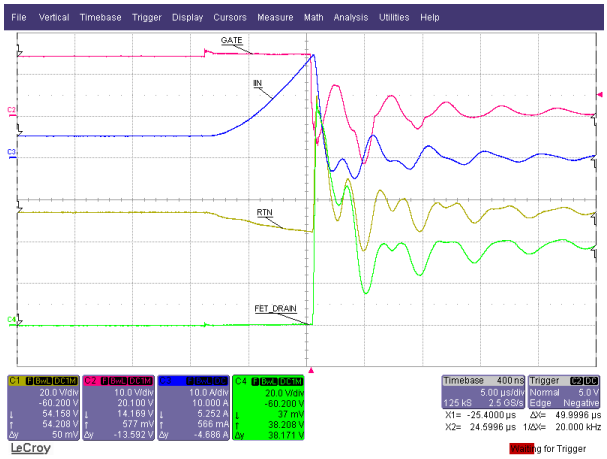

Scope GND = -48V_B, 5A Load, Zoomed in

Figure 27. Output Hot Short (VinB = 54 V)

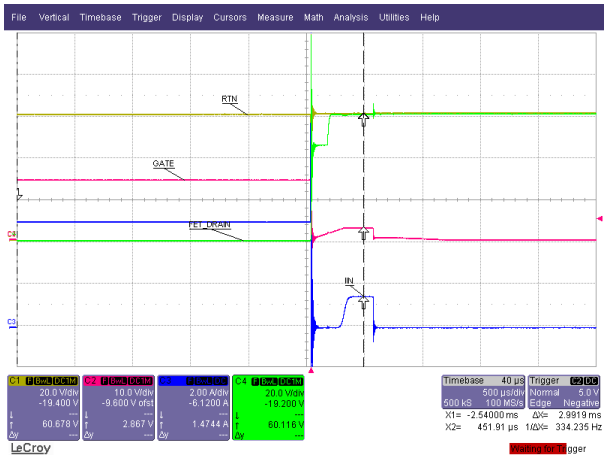

Scope GND = -48V_B, 5-A Load

Figure 28. Output Hot Short (VinB = 60 V)

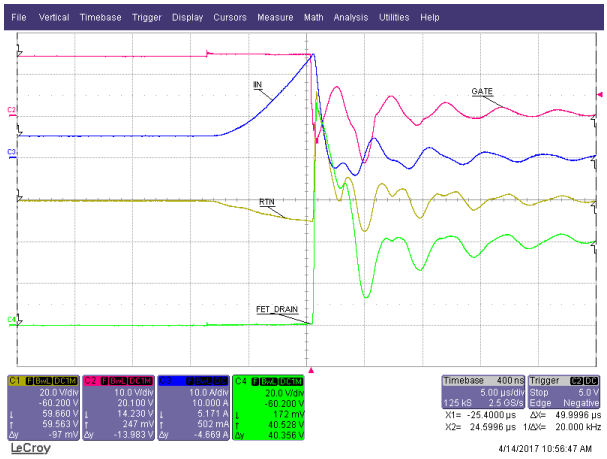

Scope GND = -48V_B, 5-A Load, Zoomed In

Figure 29. Output Hot Short (VinB = 60 V)

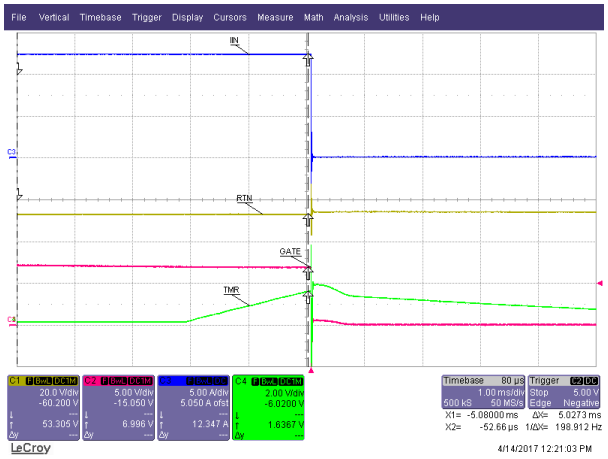

Scope GND = -48V_A

Figure 30. Gradual Over Current (VinA = 54 V)

Scope GND = -48V_A

Figure 31. Load Step Overcurrent

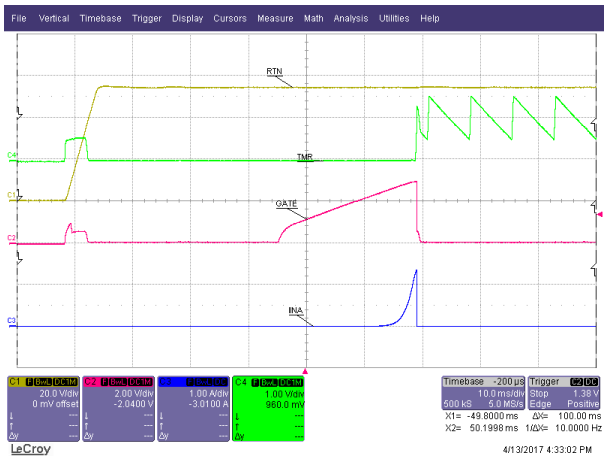

Scope Gnd = -48V_A, Vin = 54 V

Figure 32. Start Into Short

Copyright © 2017, Texas Instruments Incorporated

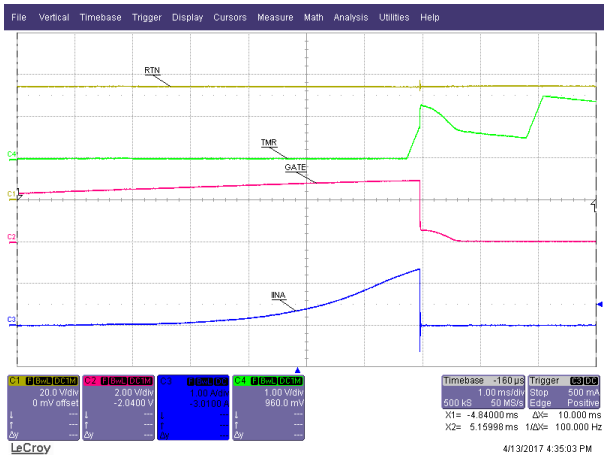

Scope Gnd = -48V_A, Vin = 54 V

Figure 33. Start Into Short

Scope Gnd = -48V_A, Vin = 54 V

Figure 34. Apply Short and Remove Short

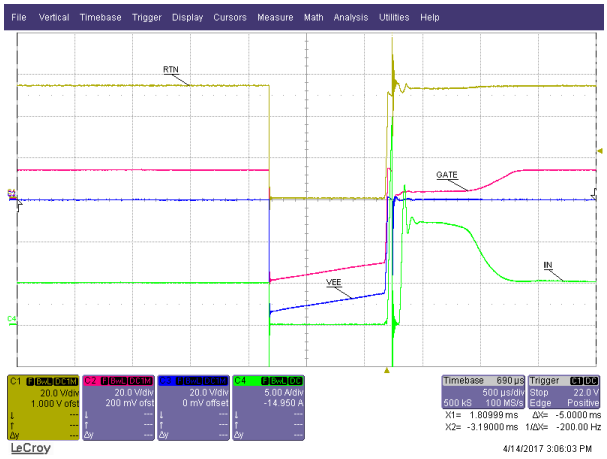

Scope GND = -48V_A, Iload = 5 A

Figure 35. 1-ms Brown Out

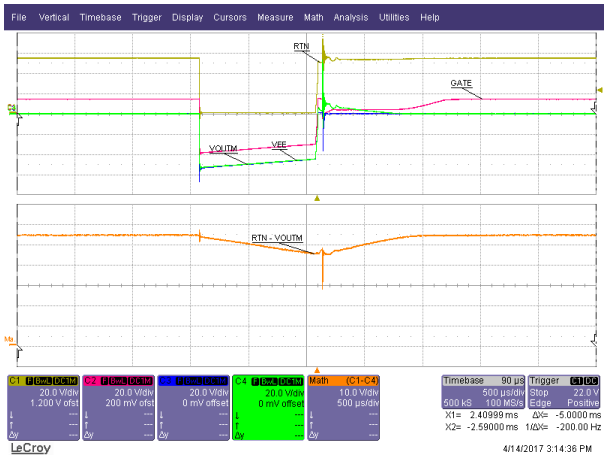

Scope GND = -48V_A, Iload = 5 A

Figure 36. 1-ms Brown Out

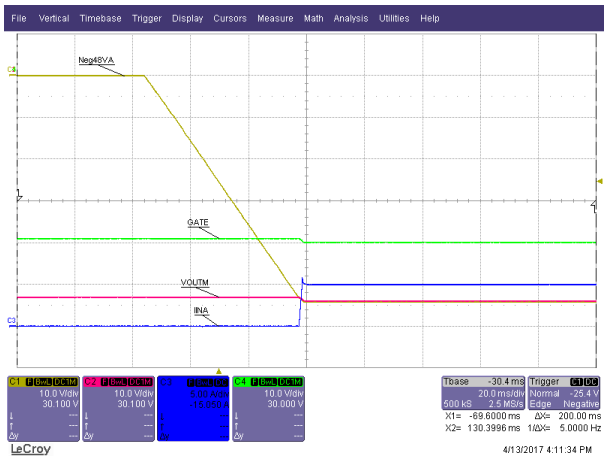

VinB = 53 V, Iload = 5 A, Scope GND = RTN

Figure 37. Supply Switch Over (Raise VinA)

VinB = 53 V (Raise VinA), Scope GND = RTN, Iload = 5 A

Figure 38. Supply Switch Over (zoomed in)

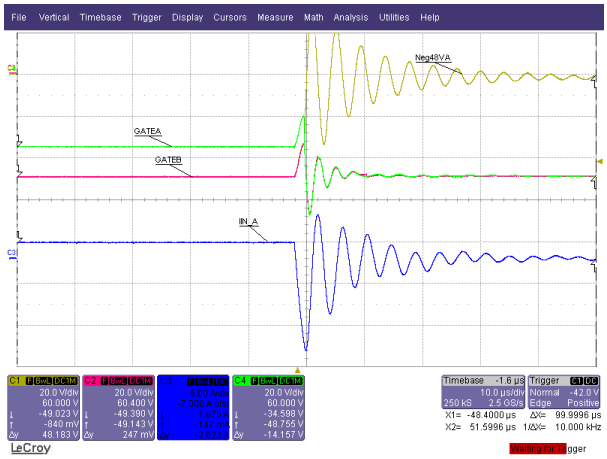

VinA = 54.5 V; VinB = 54 V, Iload = 5 A, Scope GND=RTN

Figure 39. VinA Short

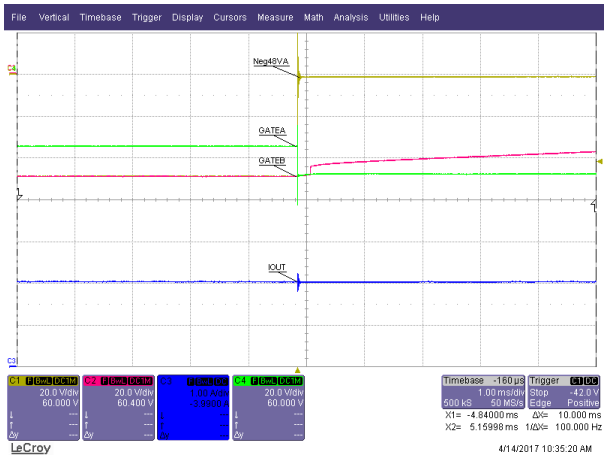

VinA = 54.5 V; VinB = 54 V, Iload = 5 A, Scope GND=RTN

Figure 40. VinA Short

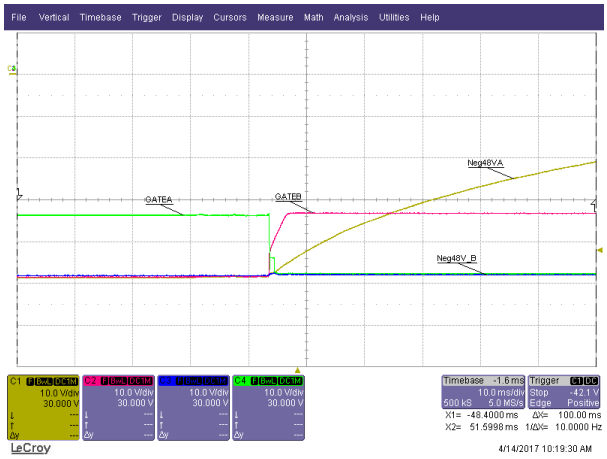

VinA = 54.5 V; VinB = 54 V, Iload = 5 A, Scope GND=RTN

Figure 41. Unplug VinA

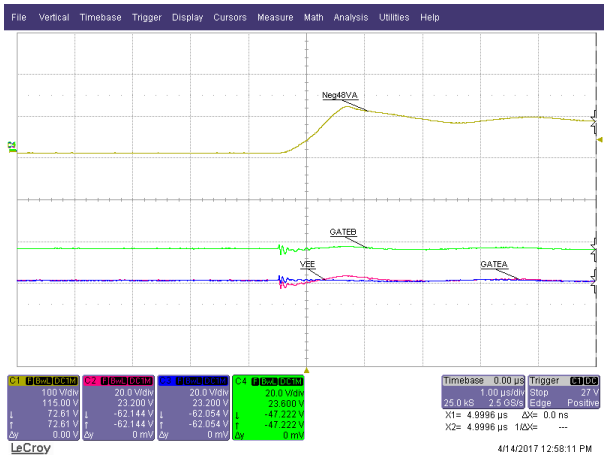

VinB = 60 V

Figure 42. Plug in VinA backwards

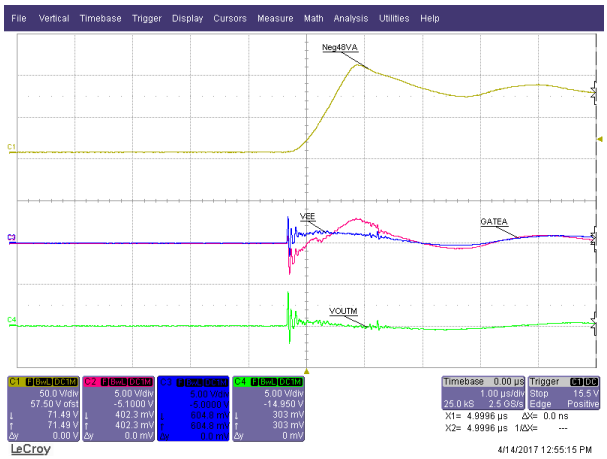

VinB Floating

Figure 43. Plug in VinA backwards

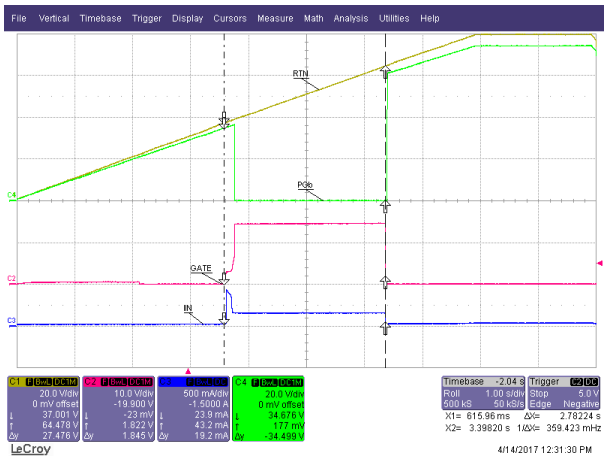

Scope GND = -48V_A, No Load

Figure 44. Under Voltage and Over Voltage (Rising)

Copyright © 2017, Texas Instruments Incorporated

Scope GND = -48V_A, No Load

Figure 45. Under Voltage and Over Voltage (Falling)

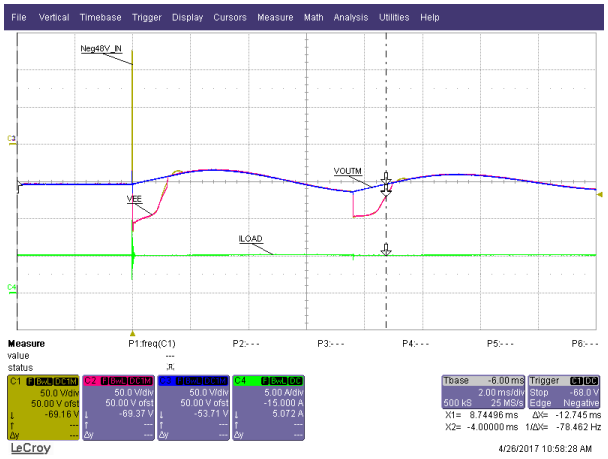

Scope GND = RTN, 5-A load, Per IEC61000-4-5

Figure 46. -2 kV (2 Ω) Lightning Surge

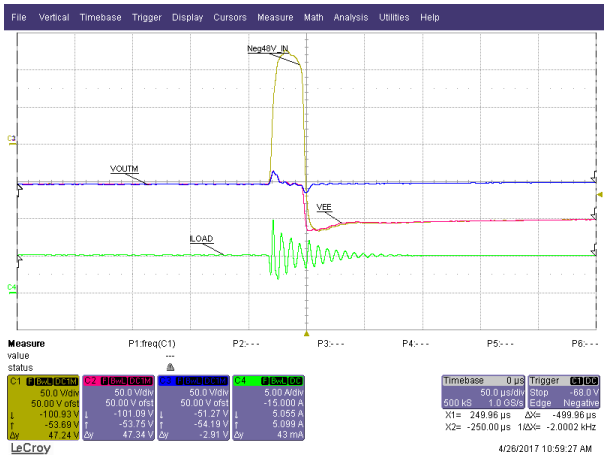

Scope GND = RTN, 5-A load, Per IEC61000-4-5

Figure 47. -2 kV (2 Ω) Lightning Surge (zoomed in)

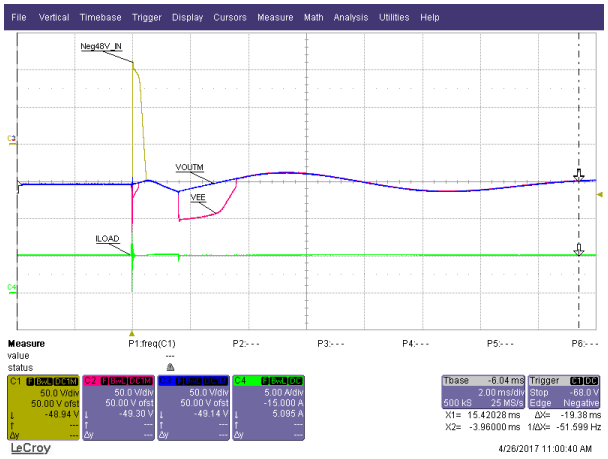

Scope GND = RTN, 5-A load, Per IEC61000-4-5

Figure 48. +2 kV (2 Ω) Lightning Surge (zoomed in)

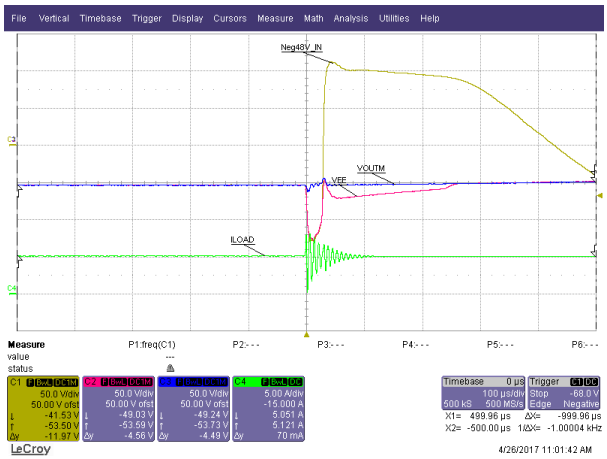

Scope GND = RTN, 5-A load, Per IEC61000-4-5

Figure 49. +2 kV (2 Ω) Lightning Surge (zoomed in)

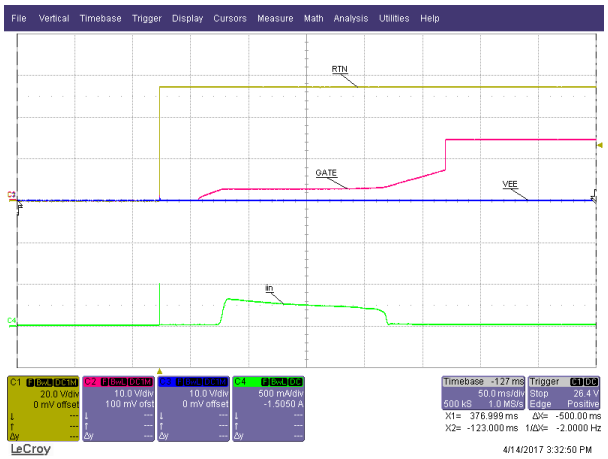

Lin = 20 µH, Scope GND = -48V_A

Figure 50. Start-Up (Vin = 54 V)

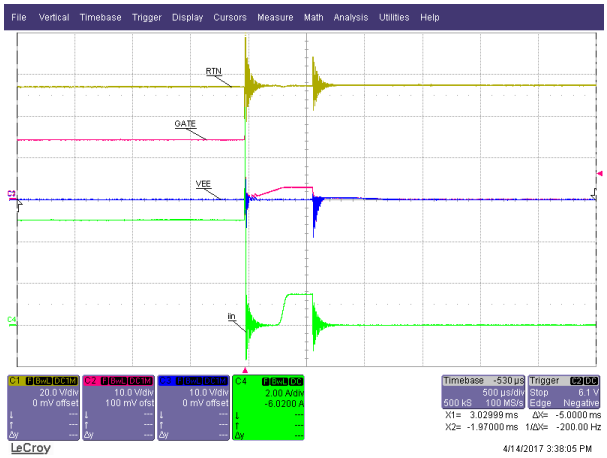

Lin = 20 µH, Scope GND = -48V_A

Figure 51. Hot Short (Vin = 54 V)

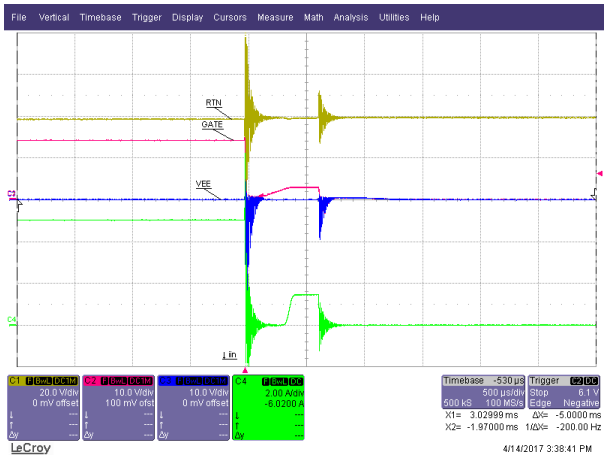

Lin = 20 µH, Scope GND = -48V_A

Figure 52. Hot Short (Vin = 38 V)

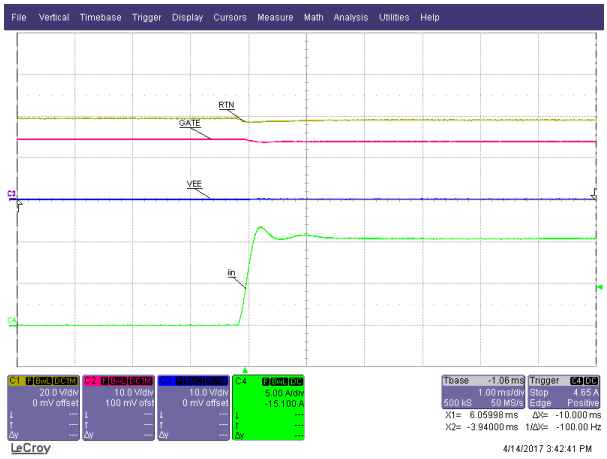

Lin = 20 µH, Scope GND = -48V_A,

Figure 53. Load Step (0 A - 11 A)

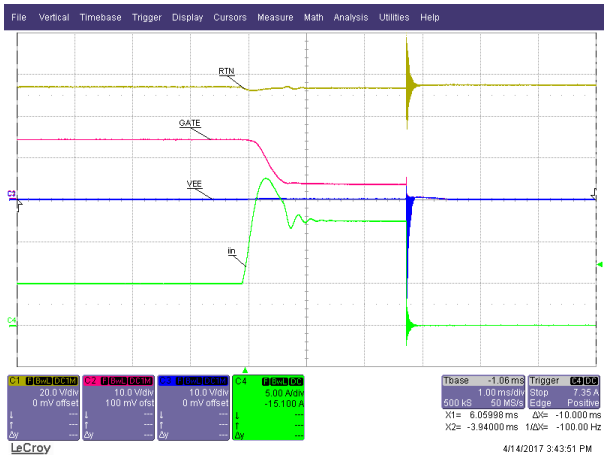

Lin = 20 µH, Scope GND = -48V_A

Figure 54. Load Step Into Overcurrent

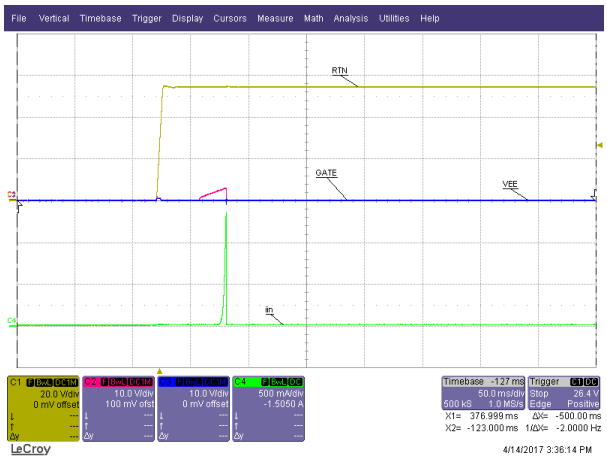

Lin = 20 µH, Scope GND = -48V_A

Figure 55. Start Into Short

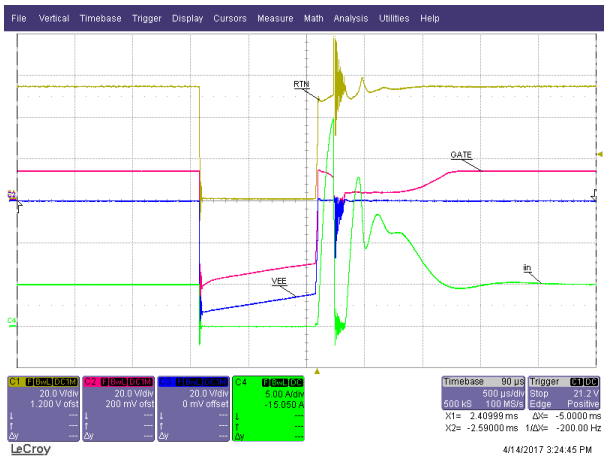

Lin = 20 µH, Scope GND = -48V_A

Figure 56. 1-ms Brown Out

Copyright © 2017, Texas Instruments Incorporated

10 Power Supply Recommendations

In general, the TPS23525 is designed to have robust operation from a non-ideal –48 V bus with various transients such as the lightning surge. The IC is powered through RVCC making it more immune to supply drop outs and high voltage spikes. Regardless, TI recommends following several key precautions:

- Always test the solution with the various transients that can be encountered in the systems. This especially applies to transients that were not tested with TI's EVM.
- If large input ripple is expected during start-up, increase the ratio of $C_{SS,\ VEE}$ to C_{SS} to reduce input current ripple at start-up.
- Operating from large input inductance (>40 µH) can cause instability to the current limit loop or oscillations during start-up. Add a capacitor from Gate to VEE to help stabilize the current limit loop. Add an input snubber if oscillations are observed at start-up.

11 Layout

11.1 Layout Guidelines

There are several things to keep in mind during layout of the TPS23525 circuit:

- The VEE and SNS pin need to have a Kelvin Sense connection to the sense resistor.
- The VEE trace carries current and needs to be thick and short in order to minimize IR drop and to avoid introducing current sensing error.
- It is recommended to use a net-tie to separate the power plane coming into the R_{SNS} and the Kelvin connection to VEE.
- Connect the Neg48Vx filtering caps, UVEN resistor divider, OV resistor divider, and TMR cap to the "VEE" to insure maximum accuracy.
- The filtering caps on Neg48VB, Neg48VA, and SNS should be placed as close to the IC as possible.

11.2 Layout Example

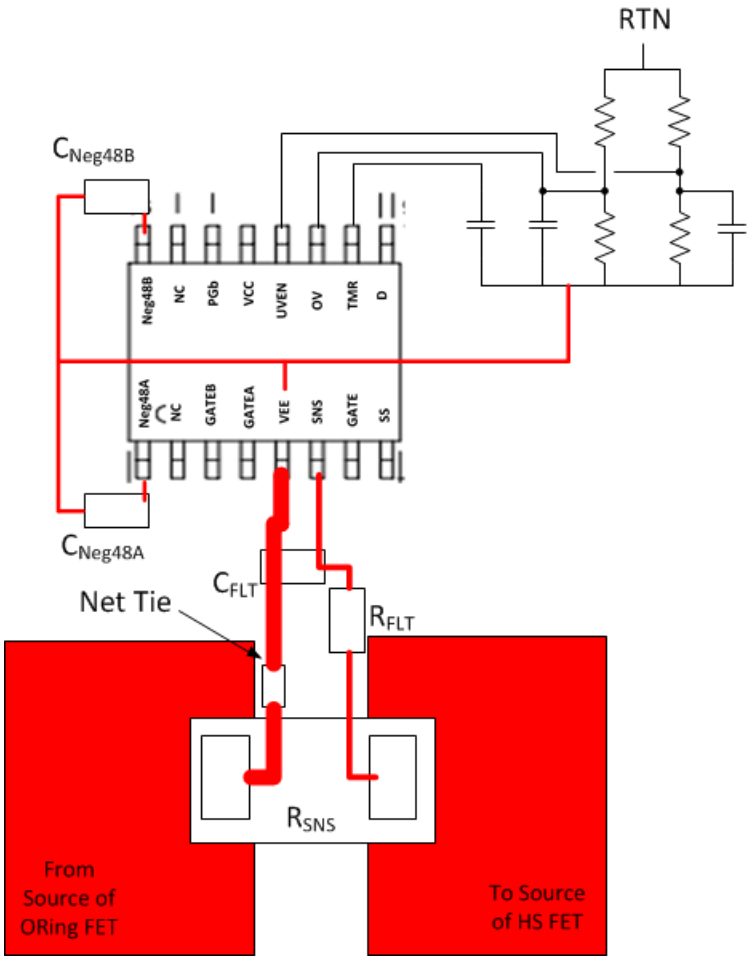

Figure 57. Layout Example

Copyright © 2017, Texas Instruments Incorporated

12 Device and Documentation Support

12.1 Device Support

12.1.1 Third-Party Products Disclaimer

TI'S PUBLICATION OF INFORMATION REGARDING THIRD-PARTY PRODUCTS OR SERVICES DOES NOT CONSTITUTE AN ENDORSEMENT REGARDING THE SUITABILITY OF SUCH PRODUCTS OR SERVICES OR A WARRANTY, REPRESENTATION OR ENDORSEMENT OF SUCH PRODUCTS OR SERVICES, EITHER ALONE OR IN COMBINATION WITH ANY TI PRODUCT OR SERVICE.

12.2 Documentation Support

12.2.1 Related Documentation

For related documentation see the following:

- TPS23525EVM-815 Evaluation Module User's Guide (SLVUB36)

12.3 Receiving Notification of Documentation Updates

To receive notification of documentation updates, navigate to the device product folder on ti.com. In the upper right corner, click on *Alert me* to register and receive a weekly digest of any product information that has changed. For change details, review the revision history included in any revised document.

12.4 Community Resources

The following links connect to TI community resources. Linked contents are provided "AS IS" by the respective contributors. They do not constitute TI specifications and do not necessarily reflect TI's views; see TI's Terms of Use.

TI E2E™ Online Community ***TI's Engineer-to-Engineer (E2E) Community.*** Created to foster collaboration among engineers. At e2e.ti.com, you can ask questions, share knowledge, explore ideas and help solve problems with fellow engineers.

Design Support ***TI's Design Support*** Quickly find helpful E2E forums along with design support tools and contact information for technical support.

12.5 Trademarks

E2E is a trademark of Texas Instruments.
All other trademarks are the property of their respective owners.

12.6 Electrostatic Discharge Caution

This integrated circuit can be damaged by ESD. Texas Instruments recommends that all integrated circuits be handled with appropriate precautions. Failure to observe proper handling and installation procedures can cause damage.

ESD damage can range from subtle performance degradation to complete device failure. Precision integrated circuits may be more susceptible to damage because very small parametric changes could cause the device not to meet its published specifications.

12.7 Glossary

SLYZ022 — *TI Glossary*.

This glossary lists and explains terms, acronyms, and definitions.

13 Mechanical, Packaging, and Orderable Information

The following pages include mechanical, packaging, and orderable information. This information is the most current data available for the designated devices. This data is subject to change without notice and revision of this document. For browser-based versions of this data sheet, refer to the left-hand navigation.

PACKAGING INFORMATION

Orderable part number	Status (1)	Material type (2)	Package | Pins	Package qty | Carrier	RoHS (3)	Lead finish/ Ball material (4)	MSL rating/ Peak reflow (5)	Op temp (°C)	Part marking (6)
TPS23525PWR	Active	Production	TSSOP (PW) | 16	2000 | LARGE T&R	Yes	NIPDAU	Level-1-260C-UNLIM	-40 to 125	23525
TPS23525PWR.B	Active	Production	TSSOP (PW) | 16	2000 | LARGE T&R	Yes	NIPDAU	Level-1-260C-UNLIM	-40 to 125	23525
TPS23525PWT	Active	Production	TSSOP (PW) | 16	250 | SMALL T&R	Yes	NIPDAU	Level-1-260C-UNLIM	-40 to 125	23525
TPS23525PWT.B	Active	Production	TSSOP (PW) | 16	250 | SMALL T&R	Yes	NIPDAU	Level-1-260C-UNLIM	-40 to 125	23525

(1) **Status:** For more details on status, see our product life cycle.

(2) **Material type:** When designated, preproduction parts are prototypes/experimental devices, and are not yet approved or released for full production. Testing and final process, including without limitation quality assurance, reliability performance testing, and/or process qualification, may not yet be complete, and this item is subject to further changes or possible discontinuation. If available for ordering, purchases will be subject to an additional waiver at checkout, and are intended for early internal evaluation purposes only. These items are sold without warranties of any kind.

(3) **RoHS values:** Yes, No, RoHS Exempt. See the TI RoHS Statement for additional information and value definition.

(4) **Lead finish/Ball material:** Parts may have multiple material finish options. Finish options are separated by a vertical ruled line. Lead finish/Ball material values may wrap to two lines if the finish value exceeds the maximum column width.

(5) **MSL rating/Peak reflow:** The moisture sensitivity level ratings and peak solder (reflow) temperatures. In the event that a part has multiple moisture sensitivity ratings, only the lowest level per JEDEC standards is shown. Refer to the shipping label for the actual reflow temperature that will be used to mount the part to the printed circuit board.

(6) **Part marking:** There may be an additional marking, which relates to the logo, the lot trace code information, or the environmental category of the part.

Multiple part markings will be inside parentheses. Only one part marking contained in parentheses and separated by a "~" will appear on a part. If a line is indented then it is a continuation of the previous line and the two combined represent the entire part marking for that device.

Important Information and Disclaimer: The information provided on this page represents TI's knowledge and belief as of the date that it is provided. TI bases its knowledge and belief on information provided by third parties, and makes no representation or warranty as to the accuracy of such information. Efforts are underway to better integrate information from third parties. TI has taken and continues to take reasonable steps to provide representative and accurate information but may not have conducted destructive testing or chemical analysis on incoming materials and chemicals. TI and TI suppliers consider certain information to be proprietary, and thus CAS numbers and other limited information may not be available for release.

In no event shall TI's liability arising out of such information exceed the total purchase price of the TI part(s) at issue in this document sold by TI to Customer on an annual basis.

TAPE AND REEL INFORMATION

REEL DIMENSIONS

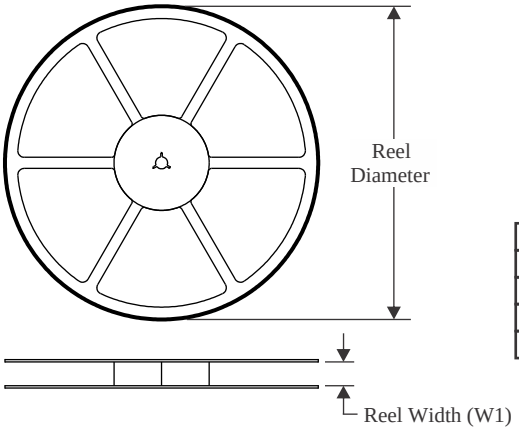

TAPE DIMENSIONS

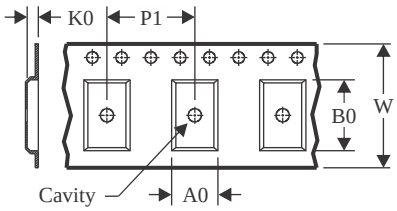

A0	Dimension designed to accommodate the component width
B0	Dimension designed to accommodate the component length
K0	Dimension designed to accommodate the component thickness
W	Overall width of the carrier tape
P1	Pitch between successive cavity centers

QUADRANT ASSIGNMENTS FOR PIN 1 ORIENTATION IN TAPE

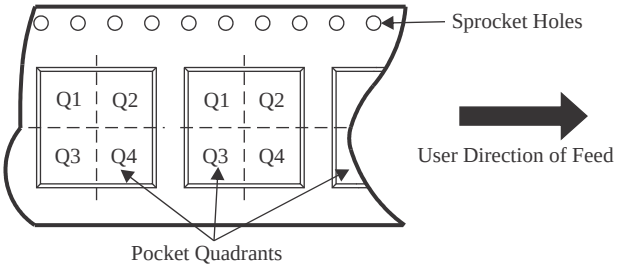

*All dimensions are nominal

Device	Package Type	Package Drawing	Pins	SPQ	Reel Diameter (mm)	Reel Width W1 (mm)	A0 (mm)	B0 (mm)	K0 (mm)	P1 (mm)	W (mm)	Pin1 Quadrant
TPS23525PWR	TSSOP	PW	16	2000	330.0	12.4	6.9	5.6	1.6	8.0	12.0	Q1
TPS23525PWT	TSSOP	PW	16	250	180.0	12.4	6.9	5.6	1.6	8.0	12.0	Q1

TAPE AND REEL BOX DIMENSIONS

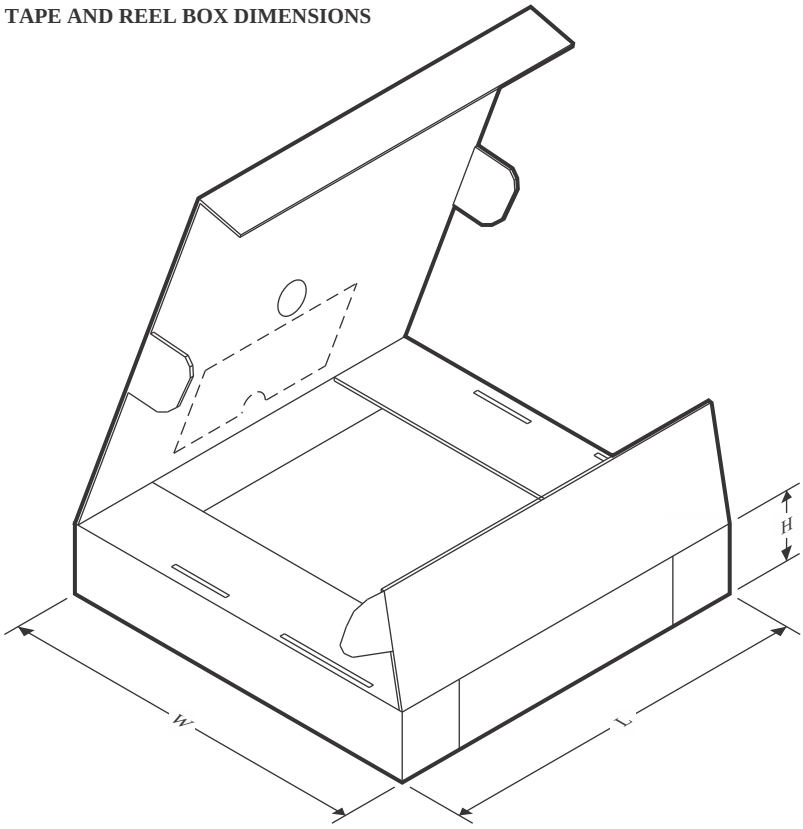

*All dimensions are nominal

Device	Package Type	Package Drawing	Pins	SPQ	Length (mm)	Width (mm)	Height (mm)
TPS23525PWR	TSSOP	PW	16	2000	356.0	356.0	35.0
TPS23525PWT	TSSOP	PW	16	250	210.0	185.0	35.0

PW0016A

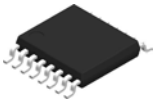

PACKAGE OUTLINE

TSSOP - 1.2 mm max height

SMALL OUTLINE PACKAGE

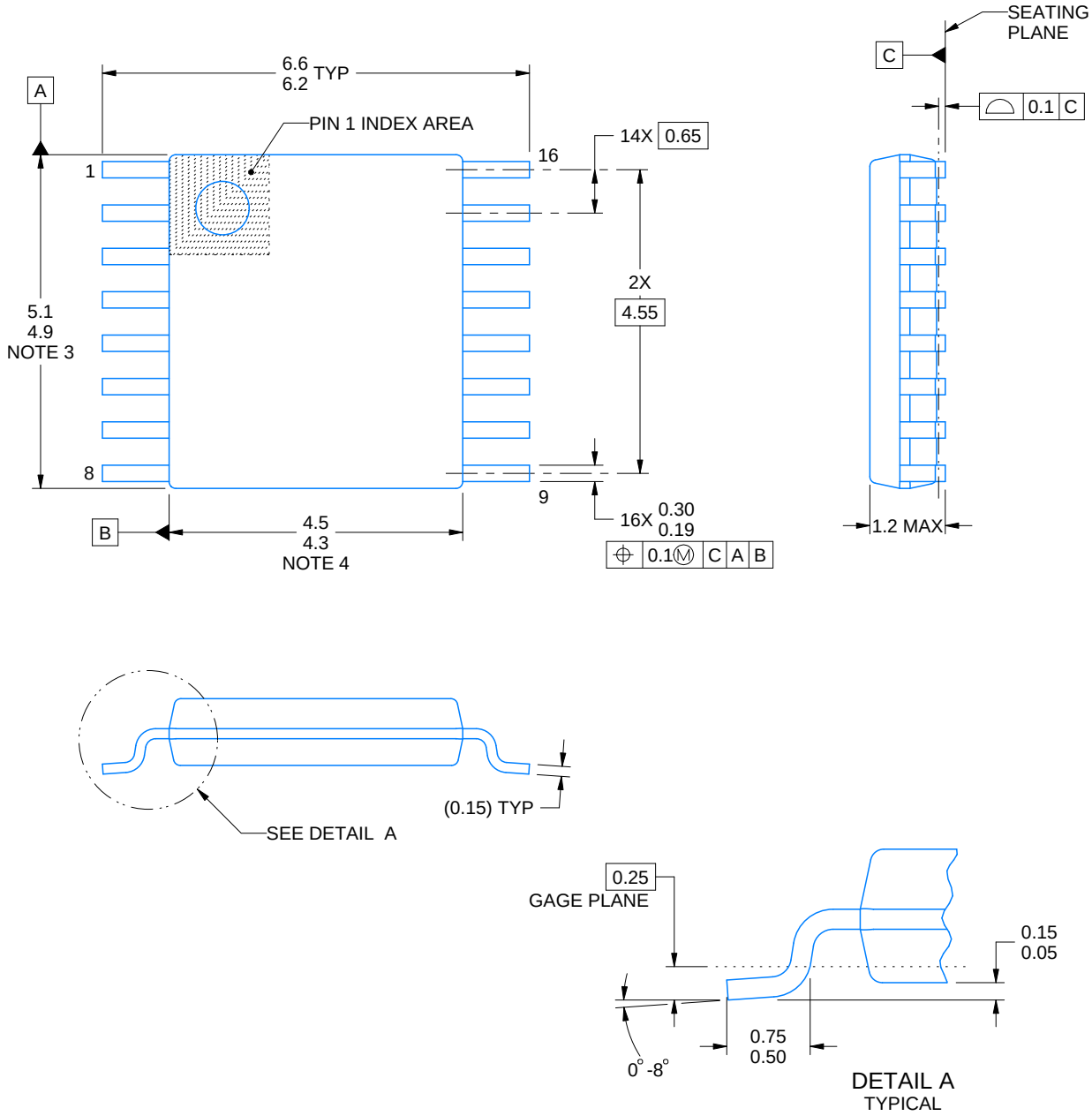

NOTES:

1. All linear dimensions are in millimeters. Any dimensions in parenthesis are for reference only. Dimensioning and tolerancing per ASME Y14.5M.
2. This drawing is subject to change without notice.
3. This dimension does not include mold flash, protrusions, or gate burrs. Mold flash, protrusions, or gate burrs shall not exceed 0.15 mm per side.
4. This dimension does not include interlead flash. Interlead flash shall not exceed 0.25 mm per side.
5. Reference JEDEC registration MO-153.

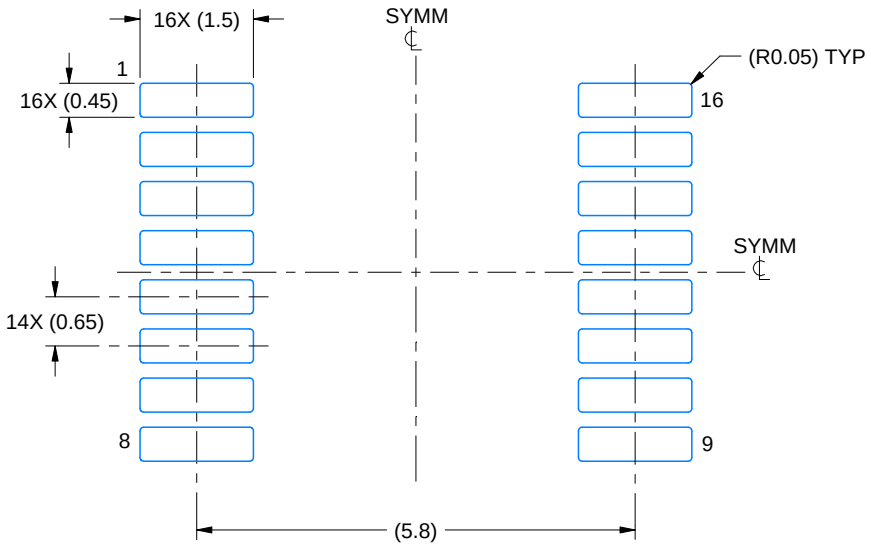

LAND PATTERN EXAMPLE
EXPOSED METAL SHOWN
SCALE: 10X

NON-SOLDER MASK DEFINED (PREFERRED)

SOLDER MASK DEFINED

SOLDER MASK DETAILS

4220204/A 02/2017

NOTES: (continued)

6. Publication IPC-7351 may have alternate designs.
7. Solder mask tolerances between and around signal pads can vary based on board fabrication site.

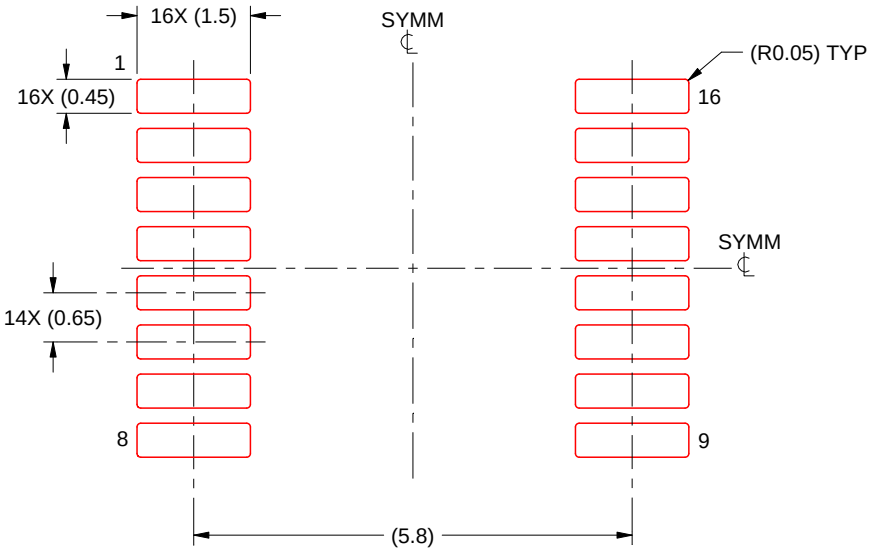

SOLDER PASTE EXAMPLE
BASED ON 0.125 mm THICK STENCIL
SCALE: 10X

4220204/A 02/2017

NOTES: (continued)

8. Laser cutting apertures with trapezoidal walls and rounded corners may offer better paste release. IPC-7525 may have alternate design recommendations.
9. Board assembly site may have different recommendations for stencil design.

IMPORTANT NOTICE AND DISCLAIMER

TI PROVIDES TECHNICAL AND RELIABILITY DATA (INCLUDING DATA SHEETS), DESIGN RESOURCES (INCLUDING REFERENCE DESIGNS), APPLICATION OR OTHER DESIGN ADVICE, WEB TOOLS, SAFETY INFORMATION, AND OTHER RESOURCES “AS IS” AND WITH ALL FAULTS, AND DISCLAIMS ALL WARRANTIES, EXPRESS AND IMPLIED, INCLUDING WITHOUT LIMITATION ANY IMPLIED WARRANTIES OF MERCHANTABILITY, FITNESS FOR A PARTICULAR PURPOSE OR NON-INFRINGEMENT OF THIRD PARTY INTELLECTUAL PROPERTY RIGHTS.

These resources are intended for skilled developers designing with TI products. You are solely responsible for (1) selecting the appropriate TI products for your application, (2) designing, validating and testing your application, and (3) ensuring your application meets applicable standards, and any other safety, security, regulatory or other requirements.

These resources are subject to change without notice. TI grants you permission to use these resources only for development of an application that uses the TI products described in the resource. Other reproduction and display of these resources is prohibited. No license is granted to any other TI intellectual property right or to any third party intellectual property right. TI disclaims responsibility for, and you will fully indemnify TI and its representatives against, any claims, damages, costs, losses, and liabilities arising out of your use of these resources.

TI’s products are provided subject to TI’s Terms of Sale or other applicable terms available either on ti.com or provided in conjunction with such TI products. TI’s provision of these resources does not expand or otherwise alter TI’s applicable warranties or warranty disclaimers for TI products.

TI objects to and rejects any additional or different terms you may have proposed.

Mailing Address: Texas Instruments, Post Office Box 655303, Dallas, Texas 75265
Copyright © 2025, Texas Instruments Incorporated