MUX36xxx 36-V, Low-Capacitance, Low-Leakage-Current, Precision Analog Multiplexers

1 Features

- Low on-capacitance
  - MUX36S16: 13.5 pF
  - MUX36D08: 8.7 pF
- Low input leakage: 1 pA
- Low charge injection: 0.31 pC
- Rail-to-rail operation
- Wide supply range: ±5 V to ±18 V, 10 V to 36 V
- Low on-resistance: 125 Ω
- Transition time: 97 ns
- Break-before-make switching action
- EN Pin connectable to V_{DD}
- Logic levels: 2 V to V_{DD}
- Low supply current: 45 µA
- ESD protection HBM: 2000 V
- Industry-standard TSSOP/ SOIC package and smaller WQFN package options

2 Applications

- Factory automation and industrial process control
- Programmable logic controllers (PLC)
- Analog input modules
- ATE Test equipment
- Digital multimeters
- Battery monitoring systems

3 Description

The MUX36S16 and MUX36D08 (MUX36xxx) are modern complementary metal-oxide semiconductor (CMOS) precision analog multiplexers (muxes). The MUX36S16 offers 16:1 single-ended channels, whereas the MUX36D08 offers differential 8:1 or dual 8:1 single-ended channels. The MUX36S16 and MUX36D08 work equally well with either dual supplies (±5 V to ±18 V) or a single supply (10 V to 36 V). These devices also perform well with symmetric supplies (such as V_{DD} = 12 V, V_{SS} = –12 V), and unsymmetric supplies (such as V_{DD} = 12 V, V_{SS} = –5 V). All digital inputs have transistor-transistor logic (TTL) compatible thresholds, providing both TTL and CMOS logic compatibility when operating in the valid supply voltage range.

The MUX36S16 and MUX36D08 have very low on- and off-leakage currents, allowing these multiplexers to switch signals from high input impedance sources with minimal error. A low supply current of 45 µA enables use in power-sensitive applications.

Device Information(1)

PART NUMBER	PACKAGE	BODY SIZE (NOM)
MUX36S16 MUX36D08	TSSOP (28)	9.70 mm × 6.40 mm
	SOIC (28)	17.9 mm × 7.50 mm
	WQFN (RTV) (32)	5.00 mm × 5.00 mm
	WQFN (RSN) (32)	4.00 mm × 4.00 mm

(1) For all available packages, see the package option addendum at the end of the data sheet.

Simplified Schematic

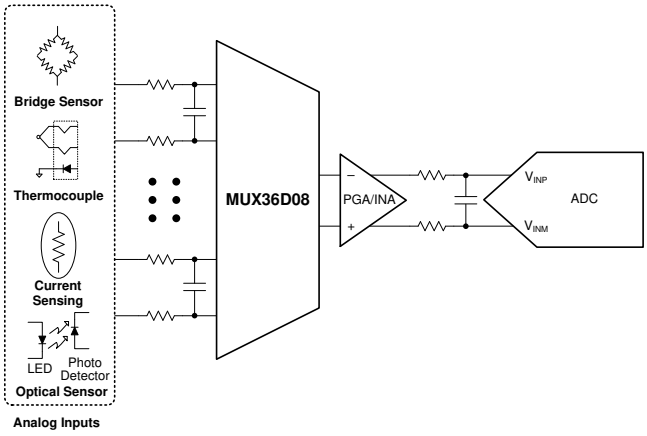

Leakage Current vs Temperature

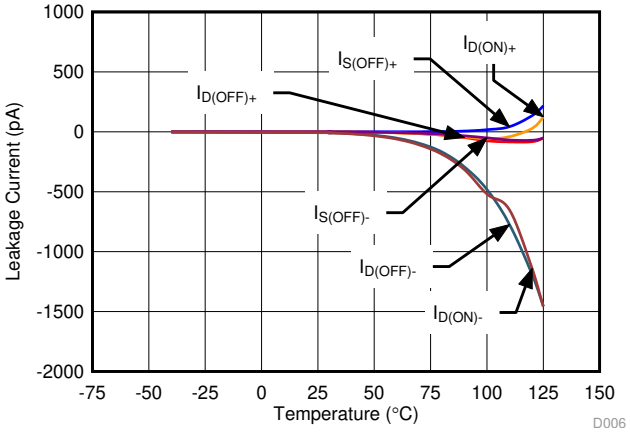

An IMPORTANT NOTICE at the end of this data sheet addresses availability, warranty, changes, use in safety-critical applications, intellectual property matters and other important disclaimers. PRODUCTION DATA.

Table of Contents

1 **Features** ... 1
2 **Applications** ... 1
3 **Description** ... 1
4 **Revision History** ... 2
5 **Pin Configuration and Functions** ... 3
6 **Specifications** ... 7
6.1 Absolute Maximum Ratings ... 7
6.2 ESD Ratings ... 7
6.3 Recommended Operating Conditions ... 7
6.4 Thermal Information ... 8
6.5 Electrical Characteristics: Dual Supply ... 8
6.6 Electrical Characteristics: Single Supply ... 10
6.7 Typical Characteristics ... 12
7 **Parameter Measurement Information** ... 17
7.1 Truth Tables ... 17
8 **Detailed Description** ... 25
8.1 Overview ... 25
8.2 Functional Block Diagram ... 25
8.3 Feature Description ... 26
8.4 Device Functional Modes ... 28
9 **Application and Implementation** ... 29
9.1 Application Information ... 29
9.2 Typical Application ... 29
10 **Power Supply Recommendations** ... 31
11 **Layout** ... 32
11.1 Layout Guidelines ... 32
11.2 Layout Example ... 32
12 **Device and Documentation Support** ... 34
12.1 Documentation Support ... 34
12.2 Related Links ... 34
12.3 Receiving Notification of Documentation Updates 34
12.4 Community Resources ... 34
12.5 Trademarks ... 34
12.6 Electrostatic Discharge Caution ... 34
12.7 Glossary ... 34
13 **Mechanical, Packaging, and Orderable Information** ... 34

4 Revision History

NOTE: Page numbers for previous revisions may differ from page numbers in the current version.

Changes from Revision B (April 2018) to Revision C	Page
• Added BW, THD+N, and C_{IN} rows to the *Electrical Characteristics: Dual Supply*	9
• Changed V_{DD} and V_{SS} supply current MAX values for ±15V supplies in *Electrical Characteristics: Dual Supply*	9
• Changed V_{DD} and V_{SS} supply current MAX values for 12V supplies in *Electrical Characteristics: Single Supply*	11

Changes from Revision A (November 2017) to Revision B	Page
• Added WQFN Package option in Features	1
• Added Added WQFN package option in *Device Information*	1
• Added pinout information for WQFN packages	3
• Added data for WQFN packages to *Thermal Information*	8

Changes from Original (November 2016) to Revision A	Page
• Changed Transition Time From: 85 ns To: 97ns (Typ) in the *Features* list	1
• Added SOIC packages to *Feature* and *Device Information*	1
• Added the DW (SOIC) package to the *Pin Configuration and Functions* section	3
• Added SOIC package to the *Thermal Information* table	8
• Changed Transition time Typ value From 85: ns To: 97ns for ±15 V supplies in the *Electrical Characteristics: Dual Supply* table	9
• Added additional specifications for the SOIC packages (Q_J, Off-isolation, and channel-to-channel crosstalk) for ±15 V supplies in *Electrical Characteristics: Dual Supply*	9
• Changed Transition time Typ value From: 91 To: 102 ns for 12 V supply in the *Electrical Characteristics: Single Supply* table	11
• Added additional specifications for the SOIC packages (Q_J, Off-isolation, and channel-to-channel crosstalk) for 12 V supply in *Electrical Characteristics: Single Supply*	11

Copyright © 2016–2019, Texas Instruments Incorporated

5 Pin Configuration and Functions

MUX36S16: DW and PW Package
28-Pin SOIC and TSSOP
Top View

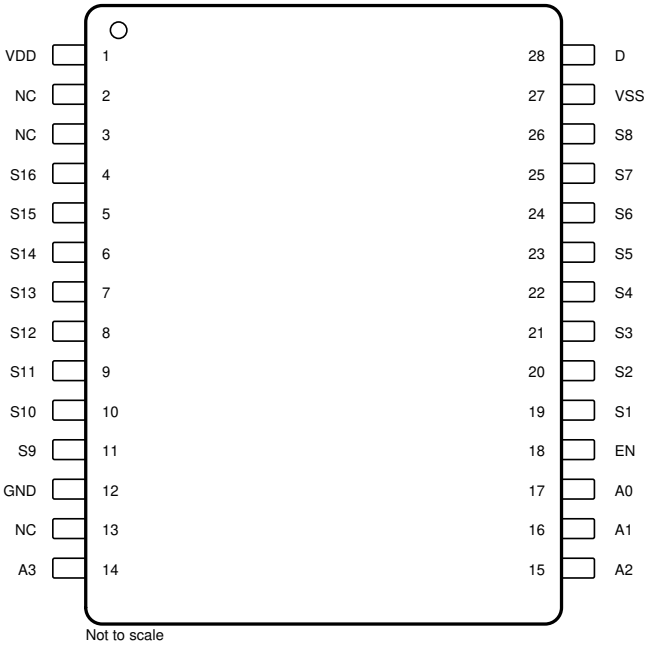

MUX36S16: RTV and RSN Package
32-Pin WQFN
Top View

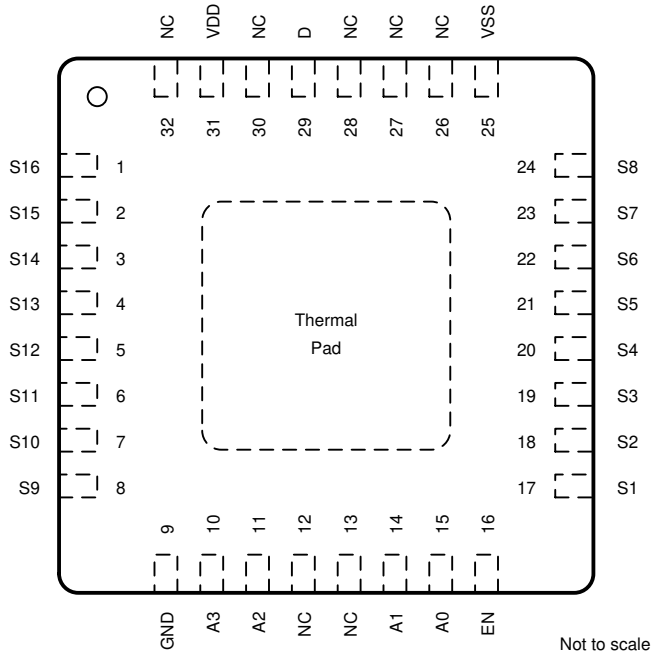

Pin Functions, MUX36S16

PIN			FUNCTION	DESCRIPTION
NAME	TSSOP/ SOIC	WQFN		
A0	17	15	Digital input	Address line 0
A1	16	14	Digital input	Address line 1
A2	15	11	Digital input	Address line 2
A3	14	10	Digital input	Address line 3
D	28	29	Analog input or output	Drain pin. Can be an input or output.
EN	18	16	Digital input	Active high digital input. When this pin is low, all switches are turned off. When this pin is high, the A[3:0] logic inputs determine which switch is turned on.
GND	12	9	Power supply	Ground (0 V) reference
NC	2, 3, 13	12, 13, 26, 27, 28, 30, 32	No connect	Do not connect
S1	19	17	Analog input or output	Source pin 1. Can be an input or output.
S2	20	18	Analog input or output	Source pin 2. Can be an input or output.
S3	21	19	Analog input or output	Source pin 3. Can be an input or output.
S4	22	20	Analog input or output	Source pin 4. Can be an input or output.
S5	23	21	Analog input or output	Source pin 5. Can be an input or output.
S6	24	22	Analog input or output	Source pin 6. Can be an input or output.
S7	25	23	Analog input or output	Source pin 7. Can be an input or output.
S8	26	24	Analog input or output	Source pin 8. Can be an input or output.
S9	11	8	Analog input or output	Source pin 9. Can be an input or output.
S10	10	7	Analog input or output	Source pin 10. Can be an input or output.

Copyright © 2016–2019, Texas Instruments Incorporated

Pin Functions, MUX36S16 (continued)

PIN			FUNCTION	DESCRIPTION
NAME	TSSOP/ SOIC	WQFN		
S11	9	6	Analog input or output	Source pin 11. Can be an input or output.
S12	8	5	Analog input or output	Source pin 12. Can be an input or output.
S13	7	4	Analog input or output	Source pin 13. Can be an input or output.
S14	6	3	Analog input or output	Source pin 14. Can be an input or output.
S15	5	2	Analog input or output	Source pin 15. Can be an input or output.
S16	4	1	Analog input or output	Source pin 16. Can be an input or output.
VDD	1	31	Power supply	Positive power supply. This pin is the most positive power-supply potential. For reliable operation, connect a decoupling capacitor ranging from 0.1 µF to 10 µF between V_{DD} and GND.
VSS	27	25	Power supply	Negative power supply. This pin is the most negative power-supply potential. In single-supply applications, this pin can be connected to ground. For reliable operation, connect a decoupling capacitor ranging from 0.1 µF to 10 µF between V_{SS} and GND.

Copyright © 2016–2019, Texas Instruments Incorporated

MUX36D08: DW and PW Package
28-Pin SOIC and TSSOP
Top View

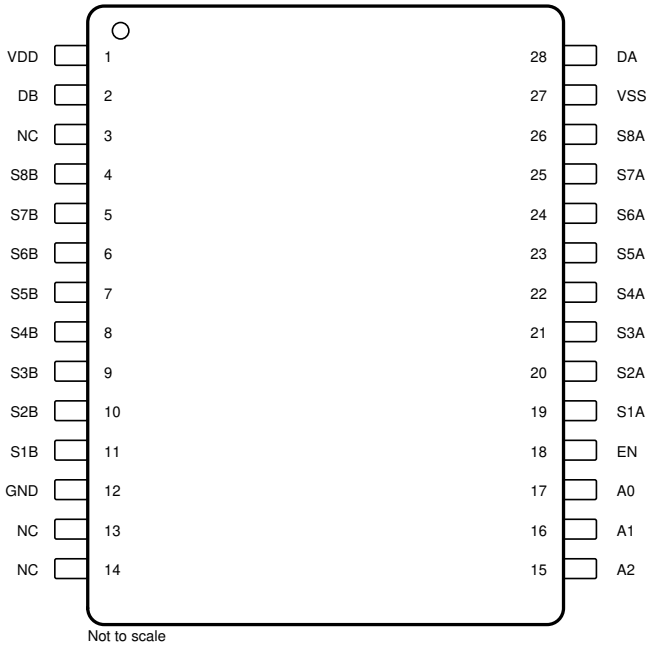

Not to scale

MUX36D08: RTV and RSN Package
32-Pin WQFN
Top View

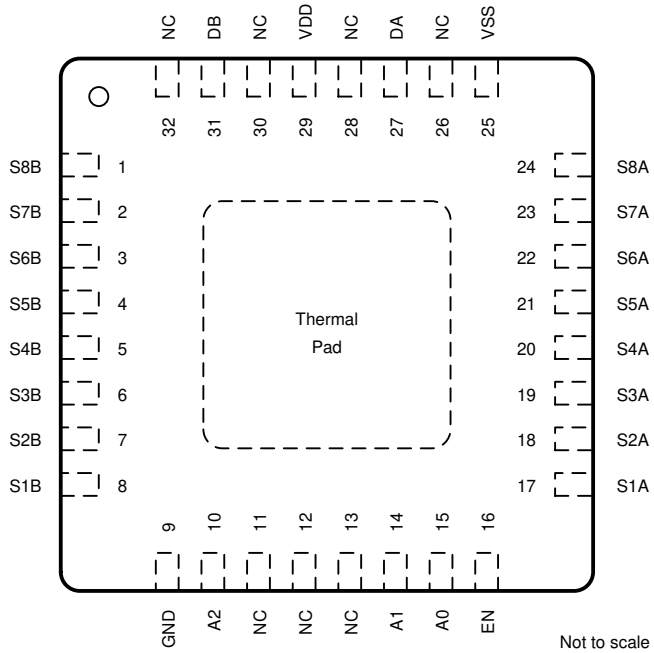

Not to scale

Pin Functions: MUX36D08

PIN			FUNCTION	DESCRIPTION
NAME	TSSOP/ SOIC	WQFN		
A0	17	15	Digital input	Address line 0
A1	16	14	Digital input	Address line 1
A2	15	10	Digital input	Address line 2
DA	28	27	Analog input or output	Drain pin A. Can be an input or output.
DB	2	31	Analog input or output	Drain pin B. Can be an input or output.
EN	18	16	Digital input	Active high digital input. When this pin is low, all switches are turned off. When this pin is high, the A[2:0] logic inputs determine which pair of switches is turned on.
GND	12	9	Power supply	Ground (0 V) reference
NC	3, 13, 14	11, 12, 13, 26, 28, 30, 32	No connect	Do not connect
S1A	19	17	Analog input or output	Source pin 1A. Can be an input or output.
S2A	20	18	Analog input or output	Source pin 2A. Can be an input or output.
S3A	21	19	Analog input or output	Source pin 3A. Can be an input or output.
S4A	22	20	Analog input or output	Source pin 4A. Can be an input or output.
S5A	23	21	Analog input or output	Source pin 5A. Can be an input or output.
S6A	24	22	Analog input or output	Source pin 6A. Can be an input or output.
S7A	25	23	Analog input or output	Source pin 7A. Can be an input or output.
S8A	26	24	Analog input or output	Source pin 8A. Can be an input or output.
S1B	11	8	Analog input or output	Source pin 1B. Can be an input or output.
S2B	10	7	Analog input or output	Source pin 2B. Can be an input or output.
S3B	9	6	Analog input or output	Source pin 3B. Can be an input or output.

Copyright © 2016–2019, Texas Instruments Incorporated

Pin Functions: MUX36D08 (continued)

PIN			FUNCTION	DESCRIPTION
NAME	TSSOP/ SOIC	WQFN		
S4B	8	5	Analog input or output	Source pin 4B. Can be an input or output.
S5B	7	4	Analog input or output	Source pin 5B. Can be an input or output.
S6B	6	3	Analog input or output	Source pin 6B. Can be an input or output.
S7B	5	2	Analog input or output	Source pin 7B. Can be an input or output.
S8B	4	1	Analog input or output	Source pin 8B. Can be an input or output.
VDD	1	29	Power supply	Positive power supply. This pin is the most positive power supply potential. For reliable operation, connect a decoupling capacitor ranging from 0.1 µF to 10 µF between V_{DD} and GND.
VSS	27	25	Power supply	Negative power supply. This pin is the most negative power supply potential. In single-supply applications, this pin can be connected to ground. For reliable operation, connect a decoupling capacitor ranging from 0.1 µF to 10 µF between V_{SS} and GND.

Copyright © 2016–2019, Texas Instruments Incorporated

6 Specifications

6.1 Absolute Maximum Ratings

over operating free-air temperature range (unless otherwise noted)[1]

			MIN	MAX	UNIT
Voltage	Supply	V_{DD}	–0.3	40	V
		V_{SS}	–40	0.3	
		$V_{DD} – V_{SS}$		40	
	Digital pins[2]: EN, A0, A1, A2, A3		V_{SS} – 0.3	V_{DD} + 0.3	
	Analog pins[2]: Sx, SxA, SxB, D, DA, DB		V_{SS} – 2	V_{DD} + 2	
Current[3]			–30	30	mA
Temperature	Operating, T_A		–55	150	°C
	Junction, T_J			150	
	Storage, T_{stg}		–65	150	

(1) Stresses beyond those listed under *Absolute Maximum Ratings* may cause permanent damage to the device. These are stress ratings only, which do not imply functional operation of the device at these or any other conditions beyond those indicated under *Recommended Operating Conditions*. Exposure to absolute-maximum-rated conditions for extended periods may affect device reliability.
(2) Voltage limits are valid if current is limited to ±30 mA.
(3) Only one pin at a time.

6.2 ESD Ratings

			VALUE	UNIT
$V_{(ESD)}$	Electrostatic discharge	Human-body model (HBM), per ANSI/ESDA/JEDEC JS-001[1]	2000	V
		Charged-device model (CDM), per JEDEC specification JESD22-C101[2]	500	

(1) JEDEC document JEP155 states that 500-V HBM allows safe manufacturing with a standard ESD control process.
(2) JEDEC document JEP157 states that 250-V CDM allows safe manufacturing with a standard ESD control process.

6.3 Recommended Operating Conditions

			MIN	NOM	MAX	UNIT
V_{DD}[1]	Positive power-supply voltage	Dual supply	5		18	V
		Single supply	10		36	
V_{SS}[2]	Negative power-supply voltage (dual supply)		–5		–18	V
$V_{DD} – V_{SS}$	Supply voltage		10		36	V
V_S	Source pins voltage[3]		V_{SS}		V_{DD}	V
V_D	Drain pins voltage		V_{SS}		V_{DD}	V
V_{EN}	Enable pin voltage		V_{SS}		V_{DD}	V
V_A	Address pins voltage		V_{SS}		V_{DD}	V
I_{CH}	Channel current (T_A = 25°C)		–25		25	mA
T_A	Operating temperature		–40		125	°C

(1) When V_{SS} = 0 V, V_{DD} can range from 10 V to 36 V.
(2) V_{DD} and V_{SS} can be any value as long as 10 V ≤ ($V_{DD} – V_{SS}$) ≤ 36 V.
(3) V_S is the voltage on all the S pins.

Copyright © 2016–2019, Texas Instruments Incorporated

6.4 Thermal Information

THERMAL METRIC[1]		MUX36S16/ MUX36D08				UNIT
		PW (TSSOP)	DW (SOIC)	RTV (WQFN)	RSN (WQFN)	
		28 PINS	28 PINS	32 PINS	32 PINS	
$R_{\theta JA}$	Junction-to-ambient thermal resistance	79.8	53.6	33.0	33.7	°C/W
$R_{\theta JC(top)}$	Junction-to-case (top) thermal resistance	24.0	30.1	20.8	26.5	°C/W
$R_{\theta JB}$	Junction-to-board thermal resistance	37.6	28.5	13.9	13.4	°C/W
ψ_{JT}	Junction-to-top characterization parameter	1.2	9.0	0.3	0.3	°C/W
ψ_{JB}	Junction-to-board characterization parameter	37.1	28.4	13.8	13.4	°C/W
$R_{\theta JC(bot)}$	Junction-to-case (bottom) thermal resistance	N/A	N/A	4.1	4.1	°C/W

(1) For more information about traditional and new thermal metrics, see the *Semiconductor and IC Package Thermal Metrics* application report.

6.5 Electrical Characteristics: Dual Supply

at T_A = 25°C, V_{DD} = 15 V, and V_{SS} = –15 V (unless otherwise noted)

PARAMETER		TEST CONDITIONS		MIN	TYP	MAX	UNIT
ANALOG SWITCH							
	Analog signal range	T_A = –40°C to +125°C		V_{SS}		V_{DD}	V
R_{ON}	On-resistance	V_S = 0 V, I_S = –1 mA			125	170	Ω
		V_S = ±10 V, I_S = –1 mA			145	200	
			T_A = –40°C to +85°C			230	
			T_A = –40°C to +125°C			250	
ΔR_{ON}	On-resistance mismatch between channels	V_S = ±10 V, I_S = –1 mA			6	9	Ω
			T_A = –40°C to +85°C			14	
			T_A = –40°C to +125°C			16	
R_{FLAT}	On-resistance flatness	V_S = 10 V, 0 V, –10 V			20	45	Ω
			T_A = –40°C to +85°C			53	
			T_A = –40°C to +125°C			58	
	On-resistance drift	V_S = 0 V			0.62		Ω/°C
$I_{S(OFF)}$	Input leakage current	Switch state is off, V_S = ±10 V, V_D = ±10 V[1]		–0.04	0.001	0.04	nA
			T_A = –40°C to +85°C	–0.15		0.15	
			T_A = –40°C to +125°C	–1.2		1.2	
$I_{D(OFF)}$	Output off-leakage current	Switch state is off, V_S = ±10 V, V_D = ±10 V[1]		–0.15	0.01	0.15	nA
			T_A = -40°C to +85°C	–1		1	
			T_A = -40°C to +125°C	–4.5		4.5	
$I_{D(ON)}$	Output on-leakage current	Switch state is on, V_D = ±10 V, V_S = floating		–0.2	0.01	0.2	nA
			T_A = –40°C to +85°C	–1		1	
			T_A = –40°C to +125°C	–5.3		5.3	
$I_{DL(ON)}$	Differential on-leakage current	Switch state is on, V_{DA} = V_{DB} = ±10 V, V_S = floating		–15	3	15	pA
			T_A = –40°C to +85°C	–100		100	
			T_A = –40°C to +125°C	–500		500	
LOGIC INPUT							
V_{IH}	Logic voltage high			2			V
V_{IL}	Logic voltage low					0.8	V
I_D	Input current					0.1	µA

(1) When V_S is positive, V_D is negative, and vice versa.

Copyright © 2016–2019, Texas Instruments Incorporated

Electrical Characteristics: Dual Supply (continued)

at T_A = 25°C, V_{DD} = 15 V, and V_{SS} = –15 V (unless otherwise noted)

PARAMETER		TEST CONDITIONS			MIN	TYP	MAX	UNIT
SWITCH DYNAMICS(2)								
t_{ON}	Enable turn-on time	V_S = ±10 V, R_L = 300 Ω, C_L= 35 pF				82	136	ns
			T_A = –40°C to +85°C				145	
			T_A = –40°C to +125°C				151	
t_{OFF}	Enable turn-off time	V_S = ±10 V, R_L = 300 Ω, C_L= 35 pF				63	78	ns
			T_A = –40°C to +85°C				89	
			T_A = –40°C to +125°C				97	
t_t	Transition time	V_S = 10 V, R_L = 300 Ω, C_L= 35 pF,				97	143	ns
			T_A = –40°C to +85°C				151	
			T_A = –40°C to +125°C				157	
t_{BBM}	Break-before-make time delay	V_S = 10 V, R_L = 300 Ω, C_L= 35 pF, T_A = –40°C to +125°C			30	54		ns
Q_J	Charge injection	C_L = 1 nF, R_S = 0 Ω	V_S = 0 V	TSSOP package		0.31		pC
				SOIC package		0.67		
			V_S = –15 V to +15 V	TSSOP package		±0.9		
				SOIC package		±1.1		
	Off-isolation	R_L = 50 Ω, V_S = 1 V_{RMS}, f = 1 MHz	Nonadjacent channel to D, DA, DB	TSSOP package		–98		dB
				SOIC package		–94		
			Adjacent channel to D, DA, DB	TSSOP package		–94		
				SOIC package		–88		
	Channel-to-channel crosstalk	R_L = 50 Ω, V_S = 1 V_{RMS}, f = 1 MHz	Nonadjacent channels	TSSOP package		–100		dB
				SOIC package		–96		
			Adjacent channels	TSSOP package		–88		
				SOIC package		–83		
BW	–3dB Bandwidth	V_S = 1 V_{RMS}, R_L = 50 Ω , C_L = 5 pF	MUX36S16			260		dB
			MUX36D08			430		
THD + N	Total harmonic distortion plus noise	V_S = 0 V or V_{DD}, R_L = 600 Ω , C_L = 50 pF, f = 20Hz to 20kHz				0.09%		
C_{IN}	Digital input capacitance	V_{IN} = 0 V or V_{DD}				1.1		pF
$C_{S(OFF)}$	Input off-capacitance	f = 1 MHz, V_S = 0 V				2.1	3	pF
$C_{D(OFF)}$	Output off-capacitance	f = 1 MHz, V_S = 0 V	MUX36S16			11.1	12.2	pF
			MUX36D08			6.4	7.5	
$C_{S(ON)}$, $C_{D(ON)}$	Output on-capacitance	f = 1 MHz, V_S = 0 V	MUX36S16			13.5	15	pF
			MUX36D08			8.7	10.2	
POWER SUPPLY								
	V_{DD} supply current	All V_A = 0 V or 3.3 V, V_S = 0 V, V_{EN} = 3.3 V,				45	59	µA
			T_A = –40°C to +85°C				62	
			T_A = –40°C to +125°C				69	
	V_{SS} supply current	All V_A = 0 V or 3.3 V, V_S = 0 V, V_{EN} = 3.3 V,				26	33	µA
			T_A = –40°C to +85°C				36	
			T_A = –40°C to +125°C				43	

(2) Specified by design; not subject to production testing.

6.6 Electrical Characteristics: Single Supply

at T_A = 25°C, V_{DD} = 12 V, and V_{SS} = 0 V (unless otherwise noted)

PARAMETER		TEST CONDITIONS		MIN	TYP	MAX	UNIT
ANALOG SWITCH							
	Analog signal range	T_A = –40°C to +125°C		V_{SS}		V_{DD}	V
R_{ON}	On-resistance	V_S = 10 V, I_S = –1 mA			235	340	Ω
			T_A = –40°C to +85°C			390	
			T_A = –40°C to +125°C			430	
ΔR_{ON}	On-resistance match	V_S = 10 V, I_S = –1 mA			7	20	Ω
			T_A = –40°C to +85°C			35	
			T_A = –40°C to +125°C			40	
	On-resistance drift	V_S = 10 V			1.07		Ω/°C
$I_{S(OFF)}$	Input leakage current	Switch state is off, V_S = 1 V and V_D = 10 V, or V_S = 10 V and V_D = 1 V(1)		–0.04	0.001	0.04	nA
			T_A = –40°C to +85°C	–0.15		0.15	
			T_A = –40°C to +125°C	–1.2		1.2	
$I_{D(OFF)}$	Output off leakage current	Switch state is off, V_S = 1 V and V_D = 10 V, or V_S = 10 V and V_D = 1 V(1)		–0.15	0.01	0.15	nA
			T_A = –40°C to +85°C	–0.75		0.75	
			T_A = –40°C to +125°C	–2.4		2.4	
$I_{D(ON)}$	Output on leakage current	Switch state is on, V_D = 1 V and 10 V, V_S = floating		–0.15	0.01	0.15	nA
			T_A = –40°C to +85°C	–0.75		0.75	
			T_A = –40°C to +125°C	–2.5		2.5	
$I_{DL(ON)}$	Differential on-leakage current	Switch state is on, V_{DA} = V_{DB} = 1 V and 10 V, V_S = floating		–15	3	15	pA
			T_A = –40°C to +85°C	–100		100	
			T_A = –40°C to +125°C	–500		500	
LOGIC INPUT							
V_{IH}	Logic voltage high			2.0			V
V_{IL}	Logic voltage low					0.8	V
I_D	Input current					0.1	µA

(1) When V_S is 1 V, V_D is 10 V, and vice versa.

Copyright © 2016–2019, Texas Instruments Incorporated

Electrical Characteristics: Single Supply (continued)

at T_A = 25°C, V_{DD} = 12 V, and V_{SS} = 0 V (unless otherwise noted)

PARAMETER		TEST CONDITIONS			MIN	TYP	MAX	UNIT
SWITCH DYNAMIC CHARACTERISTICS(2)								
t_{ON}	Enable turn-on time	V_S = 8 V, R_L = 300 Ω, C_L= 35 pF				90	145	ns
			T_A = –40°C to +85°C				145	
			T_A = –40°C to +125°C				149	
t_{OFF}	Enable turn-off time	V_S = 8 V, R_L = 300 Ω, C_L= 35 pF				66	84	ns
			T_A = –40°C to +85°C				94	
			T_A = –40°C to +125°C				102	
t_t	Transition time	V_S = 8 V, C_L= 35 pF				107	147	ns
		V_S = 8 V, R_L = 300 Ω, C_L= 35 pF,	T_A = –40°C to +85°C				153	
		V_S = 8 V, R_L = 300 Ω, C_L= 35 pF,	T_A = –40°C to +125°C				155	
t_{BBM}	Break-before-make time delay	V_S = 8 V, R_L = 300 Ω, C_L= 35 pF, T_A = –40°C to +125°C			30	54		ns
Q_J	Charge injection	C_L = 1 nF, R_S = 0 Ω	V_S = 6 V	TSSOP package		0.12		pC
				SOIC package		0.38		
			V_S = 0 V to 12 V	TSSOP		±0.17		
				SOIC package		±0.48		
	Off-isolation	R_L = 50 Ω, V_S = 1 V_{RMS}, f = 1 MHz	Nonadjacent channel to D, DA, DB	TSSOP package		–97		dB
				SOIC package		–94		
			Adjacent channel to D, DA, DB	TSSOP package		–94		
				SOIC package		–88		
	Channel-to-channel crosstalk	R_L = 50 Ω, V_S = 1 V_{RMS}, f = 1 MHz	Nonadjacent channels	TSSOP package		–100		dB
				SOIC package		–99		
			Adjacent channels	TSSOP		-88		
				SOIC package		-83		
$C_{S(OFF)}$	Input off-capacitance	f = 1 MHz, V_S = 6 V				2.4	3.4	pF
$C_{D(OFF)}$	Output off-capacitance	f = 1 MHz, V_S = 6 V	MUX36S16			14	15.4	pF
			MUX36D08			7.8	9.1	
$C_{S(ON)}$, $C_{D(ON)}$	Output on-capacitance	f = 1 MHz, V_S = 6 V	MUX36S16			16.2	18	pF
			MUX36D08			9.9	11.6	
POWER SUPPLY								
	V_{DD} supply current	All V_A = 0 V or 3.3 V, V_S= 0 V, V_{EN} = 3.3 V				41	59	µA
			T_A = –40°C to +85°C				56	
			T_A = –40°C to +125°C				62	
	V_{SS} supply current	All V_A = 0 V or 3.3 V, V_S = 0 V, V_{EN} = 3.3 V				22	29	µA
			T_A = –40°C to +85°C				31	
			T_A = –40°C to +125°C				37	

(2) Specified by design, not subject to production test.

6.7 Typical Characteristics

at T_A = 25°C, V_{DD} = 15 V, and V_{SS} = –15 V (unless otherwise noted)

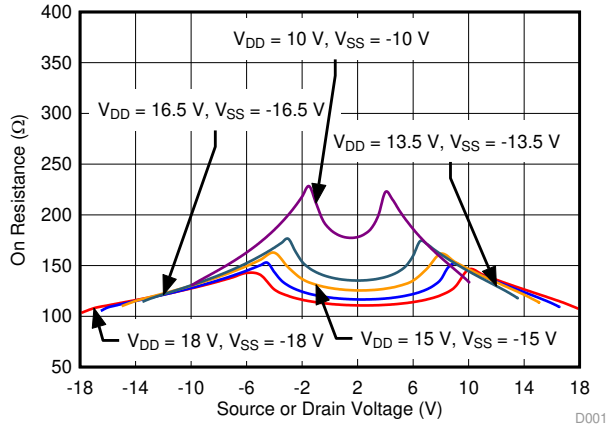

Figure 1. On-Resistance vs Source or Drain Voltage

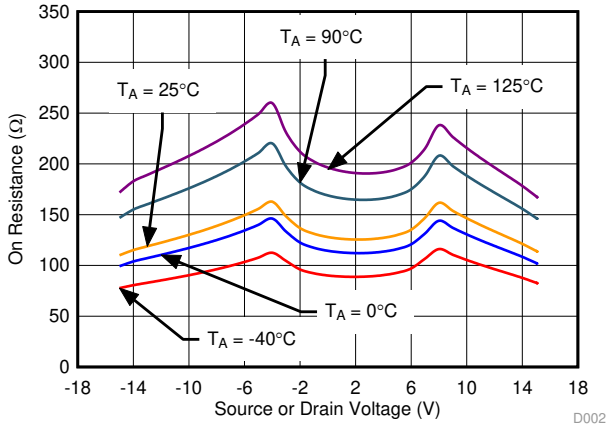

V_{DD} = 15 V, V_{SS} = –15 V

Figure 2. On-Resistance vs Source or Drain Voltage

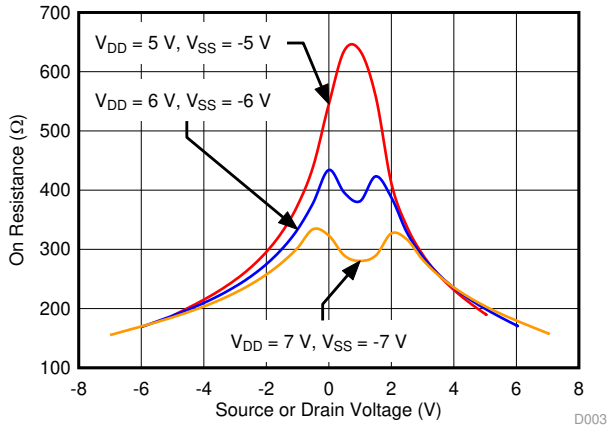

Figure 3. On-Resistance vs Source or Drain Voltage

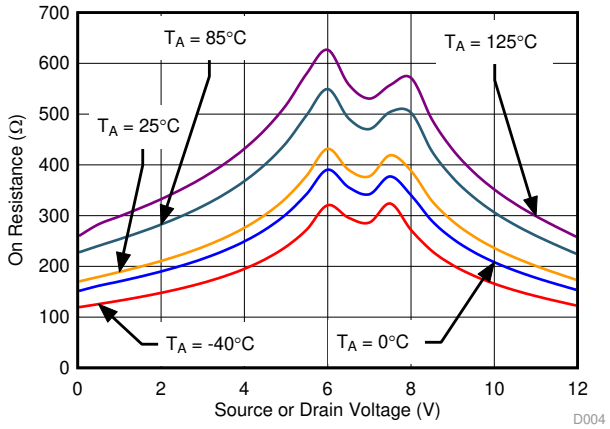

V_{DD} = 12 V, V_{SS} = 0 V

Figure 4. On-Resistance vs Source or Drain Voltage

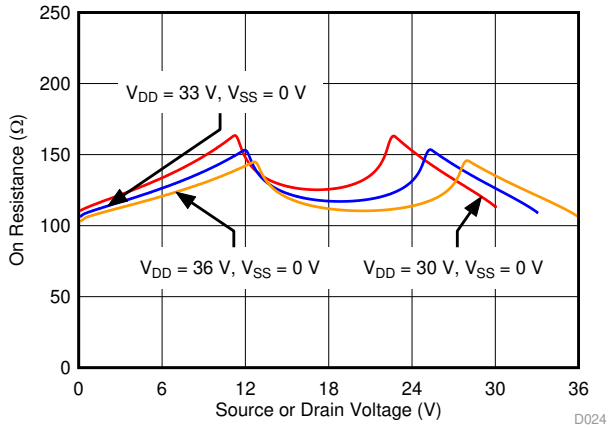

Figure 5. On-Resistance vs Source or Drain Voltage

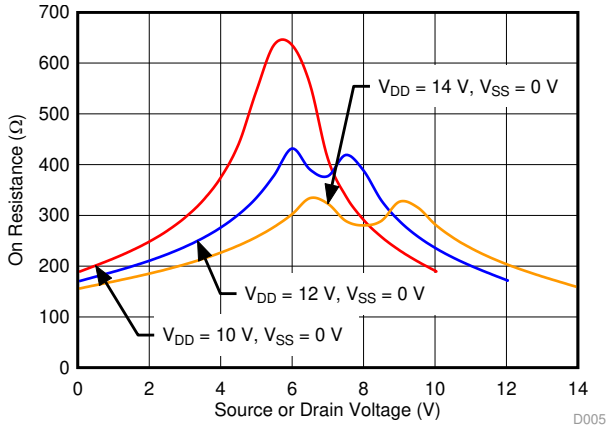

Figure 6. On-Resistance vs Source or Drain Voltage

Copyright © 2016–2019, Texas Instruments Incorporated

Typical Characteristics (continued)

at T_A = 25°C, V_{DD} = 15 V, and V_{SS} = –15 V (unless otherwise noted)

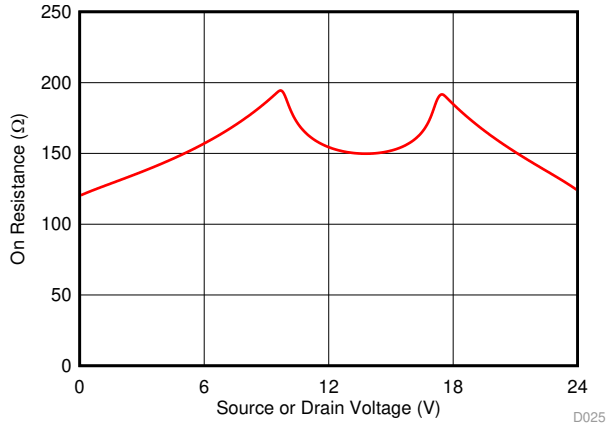

V_{DD} = 24 V, V_{SS} = 0 V

Figure 7. On-Resistance vs Source or Drain Voltage

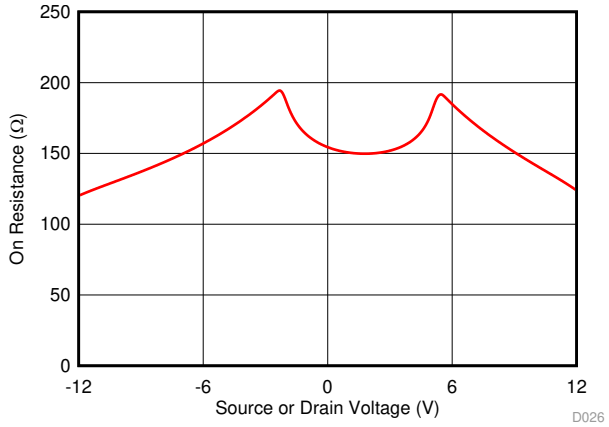

V_{DD} = 12 V, V_{SS} = –12 V

Figure 8. On-Resistance vs Source or Drain Voltage

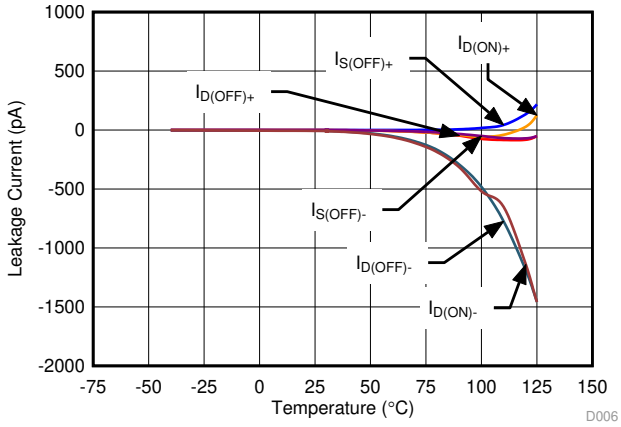

V_{DD} = 15 V, V_{SS} = –15 V

Figure 9. Leakage Current vs Temperature

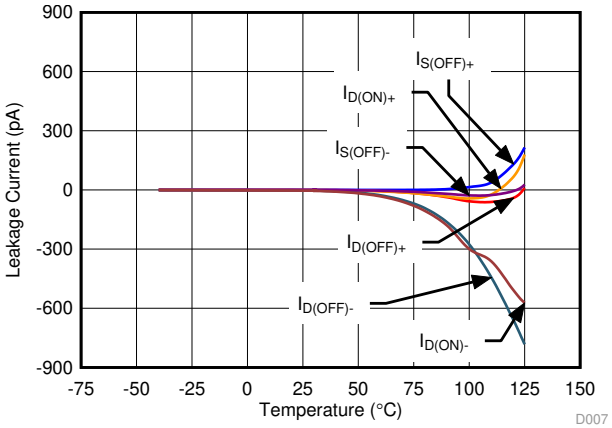

Þ

V_{DD} = 12 V, V_{SS} = 0 V

Figure 10. Leakage Current vs Temperature

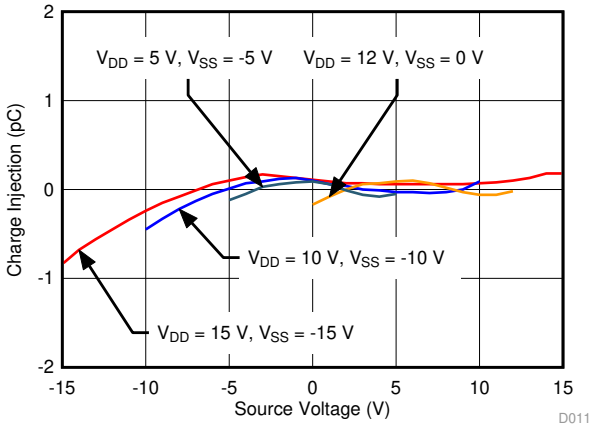

MUX36S16, source-to-drain

Figure 11. Charge Injection vs Source Voltage

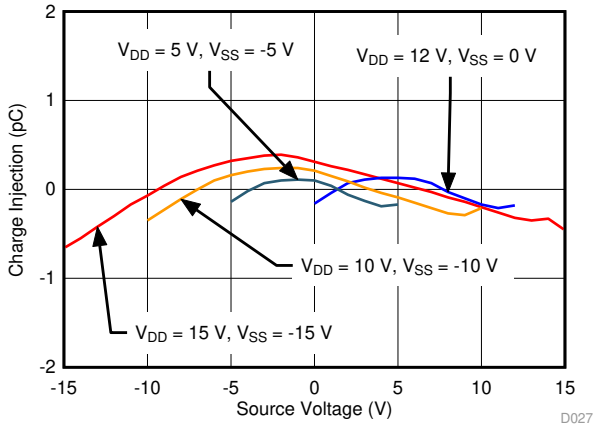

MUX36D08, source-to-drain

Figure 12. Charge Injection vs Source Voltage

Typical Characteristics (continued)

at T_A = 25°C, V_{DD} = 15 V, and V_{SS} = –15 V (unless otherwise noted)

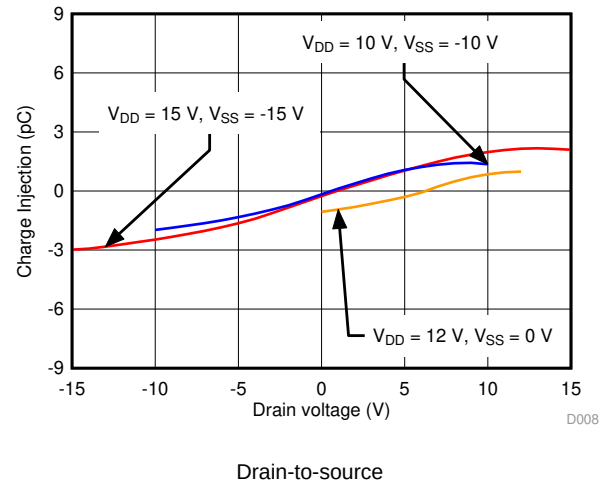

Drain-to-source

Figure 13. Charge Injection vs Drain Voltage

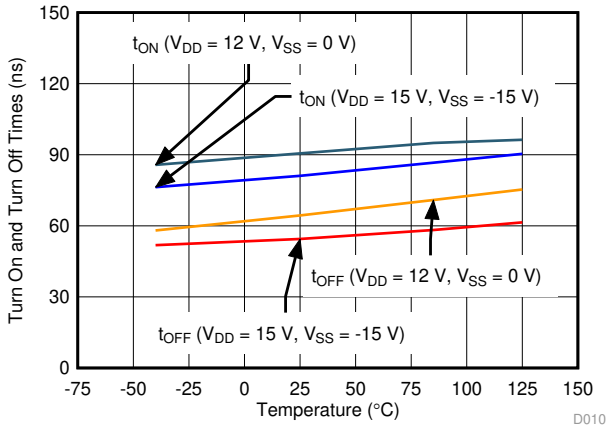

Figure 14. Turn-On and Turn-Off Times vs Temperature

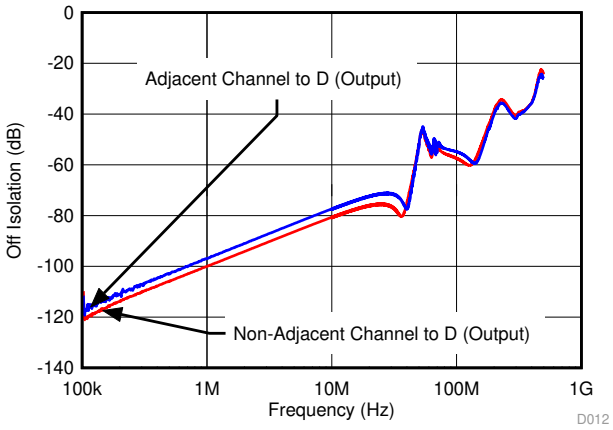

Figure 15. Off Isolation vs Frequency

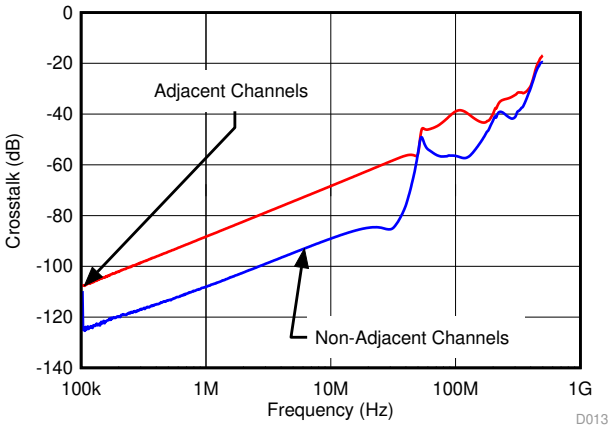

Figure 16. Crosstalk vs Frequency

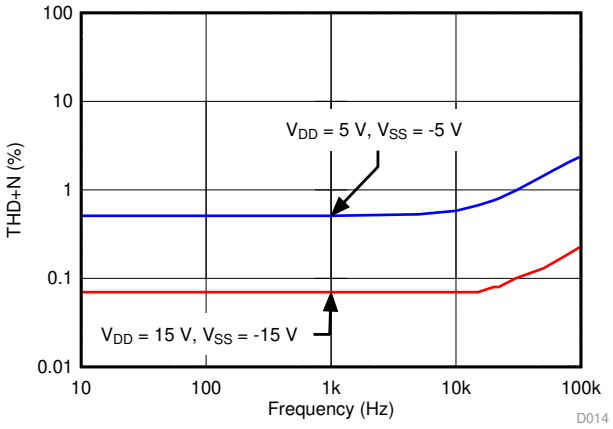

Figure 17. THD+N vs Frequency

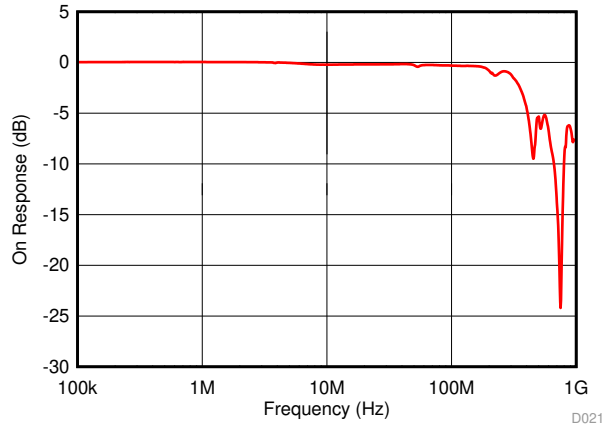

Figure 18. On Response vs Frequency

Copyright © 2016–2019, Texas Instruments Incorporated

Typical Characteristics (continued)

at T_A = 25°C, V_{DD} = 15 V, and V_{SS} = –15 V (unless otherwise noted)

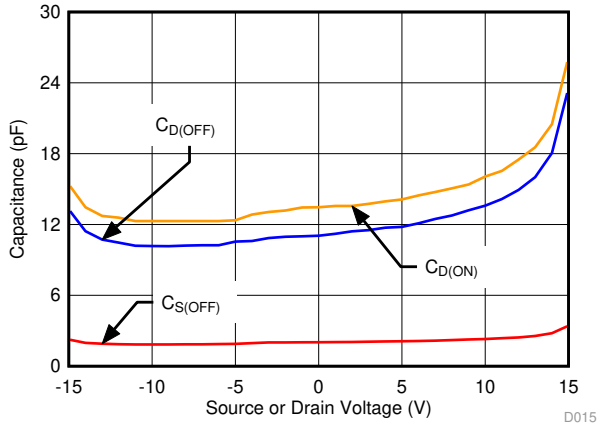

MUX36S16, V_{DD} = 15 V, V_{SS} = –15 V

Figure 19. Capacitance vs Source Voltage

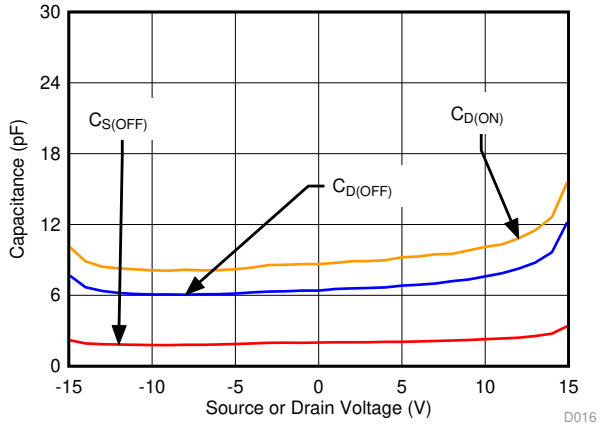

MUX36D08, V_{DD} = 15 V, V_{SS} = –15 V

Figure 20. Capacitance vs Source Voltage

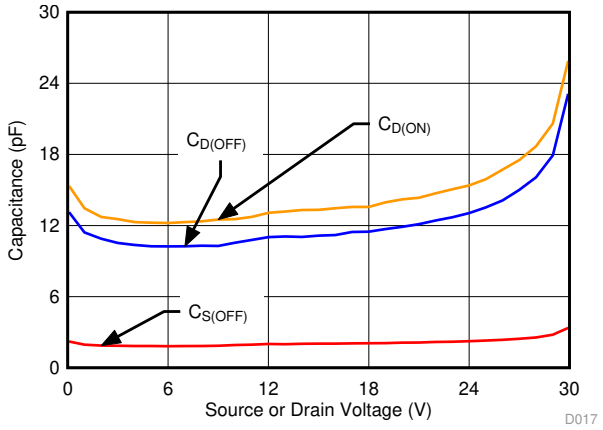

MUX36S16, V_{DD} = 30 V, V_{SS} = 0 V

Figure 21. Capacitance vs Source Voltage

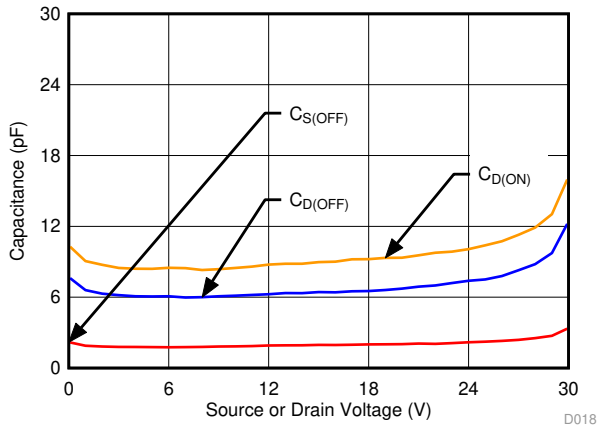

MUX36D08, V_{DD} = 30 V, V_{SS} = 0 V

Figure 22. Capacitance vs Source Voltage

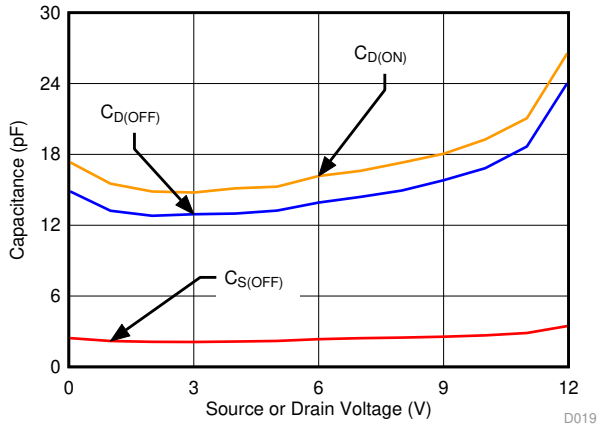

MUX36S16, V_{DD} = 12 V, V_{SS} = 0 V

Figure 23. Capacitance vs Source Voltage

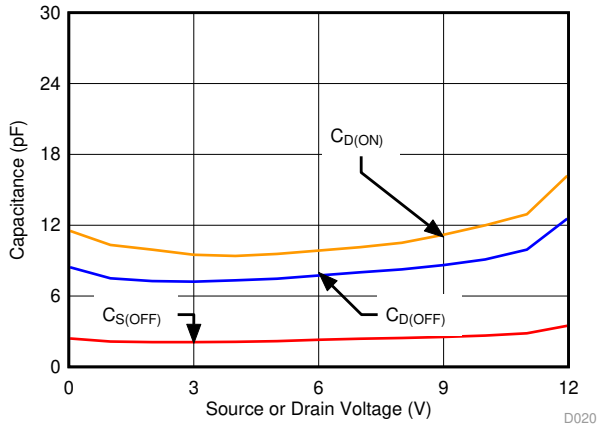

MUX36D08, V_{DD} = 12 V, V_{SS} = 0 V

Figure 24. Capacitance vs Source Voltage

Typical Characteristics (continued)

at T_A = 25°C, V_{DD} = 15 V, and V_{SS} = –15 V (unless otherwise noted)

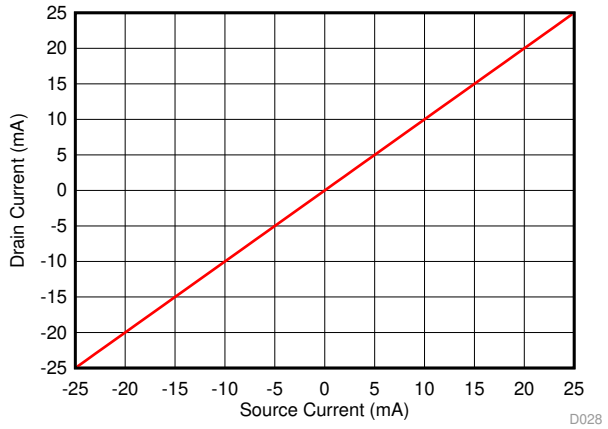

Figure 25. Source Current vs Drain Current

Copyright © 2016–2019, Texas Instruments Incorporated

7 Parameter Measurement Information

7.1 Truth Tables

Table 1. MUX36S16

EN	A3	A2	A1	A0	ON-CHANNEL
0	X(1)	X(1)	X(1)	X(1)	All channels are off
1	0	0	0	0	Channel 1
1	0	0	0	1	Channel 2
1	0	0	1	0	Channel 3
1	0	0	1	1	Channel 4
1	0	1	0	0	Channel 5
1	0	1	0	1	Channel 6
1	0	1	1	0	Channel 7
1	0	1	1	1	Channel 8
1	1	0	0	0	Channel 9
1	1	0	0	1	Channel 10
1	1	0	1	0	Channel 11
1	1	0	1	1	Channel 12
1	1	1	0	0	Channel 13
1	1	1	0	1	Channel 14
1	1	1	1	0	Channel 15
1	1	1	1	1	Channel 16

(1) X denotes *don't care*..

Table 2. MUX36D08

EN	A2	A1	A0	ON-CHANNEL
0	X(1)	X(1)	X(1)	All channels are off
1	0	0	0	Channels 1A and 1B
1	0	0	1	Channels 2A and 2B
1	0	1	0	Channels 3A and 3B
1	0	1	1	Channels 4A and 4B
1	1	0	0	Channels 5A and 5B
1	1	0	1	Channels 6A and 6B
1	1	1	0	Channels 7A and 7B
1	1	1	1	Channels 8A and 8B

(1) X denotes *don't care*.

Copyright © 2016–2019, Texas Instruments Incorporated

7.1.1 On-Resistance

The on-resistance of the MUX36xxx is the ohmic resistance across the source (Sx, SxA, or SxB) and drain (D, DA, or DB) pins of the device. The on-resistance varies with input voltage and supply voltage. The symbol R_{ON} is used to denote on-resistance. The measurement setup used to measure R_{ON} is shown in Figure 26. Voltage (V) and current (I_{CH}) are measured using this setup, and R_{ON} is computed as shown in Equation 1:

$$R_{ON} = V / I_{CH} \quad (1)$$

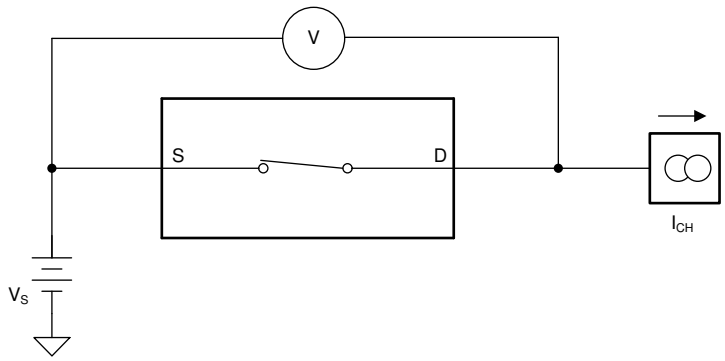

Figure 26. On-Resistance Measurement Setup

7.1.2 Off Leakage

There are two types of leakage currents associated with a switch during the OFF state:

1. Source off-leakage current
2. Drain off-leakage current

Source leakage current is defined as the leakage current flowing into or out of the source pin when the switch is off. This current is denoted by the symbol $I_{S(OFF)}$.

Drain leakage current is defined as the leakage current flowing into or out of the drain pin when the switch is off. This current is denoted by the symbol $I_{D(OFF)}$.

The setup used to measure both off-leakage currents is shown in Figure 27

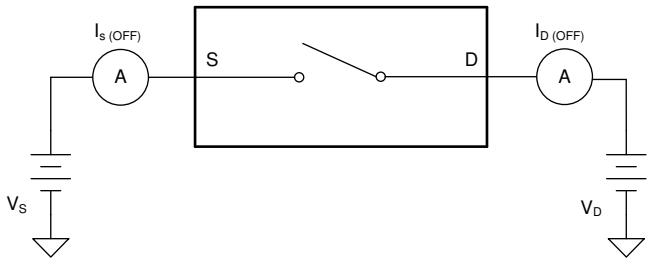

Figure 27. Off-Leakage Measurement Setup

Copyright © 2016–2019, Texas Instruments Incorporated

7.1.3 On-Leakage Current

On-leakage current is defined as the leakage current that flows into or out of the drain pin when the switch is in the ON state. The source pin is left floating during the measurement. Figure 28 shows the circuit used for measuring the on-leakage current, denoted by $I_{D(ON)}$.

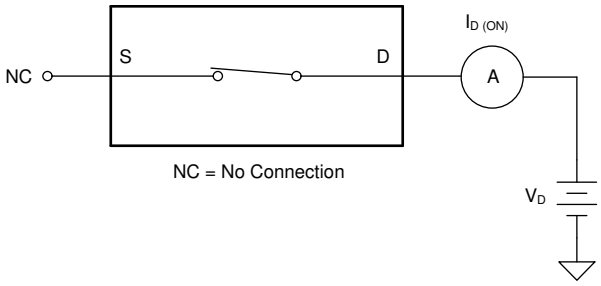

Figure 28. On-Leakage Measurement Setup

7.1.4 Differential On-Leakage Current

In case of a differential signal, the on-leakage current is defined as the differential leakage current that flows into, or out of, the drain pins when the switches are in the ON state. The source pins are left floating during the measurement. Figure 29 shows the circuit used for measuring the on-leakage current on each signal path, denoted by $I_{DA(ON)}$ and $I_{DB(ON)}$. The absolute difference between these two currents is defined as the differential on-leakage current, denoted by $I_{DL(ON)}$.

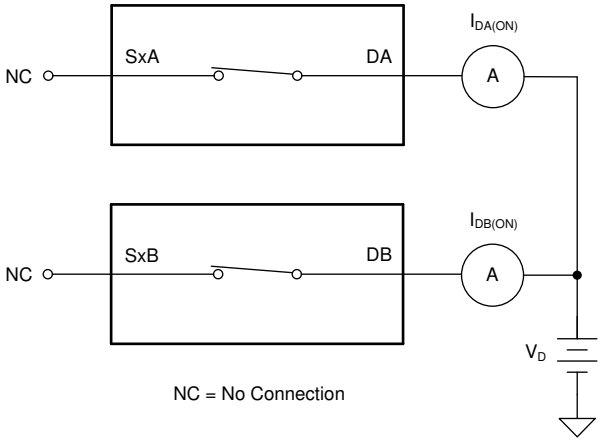

Figure 29. Differential On-Leakage Measurement Setup

7.1.5 Transition Time

Transition time is defined as the time taken by the output of the MUX36xxx to rise or fall to 90% of the transition after the digital address signal has fallen or risen to 50% of the transition. Figure 30 shows the setup used to measure transition time, denoted by the symbol t_t.

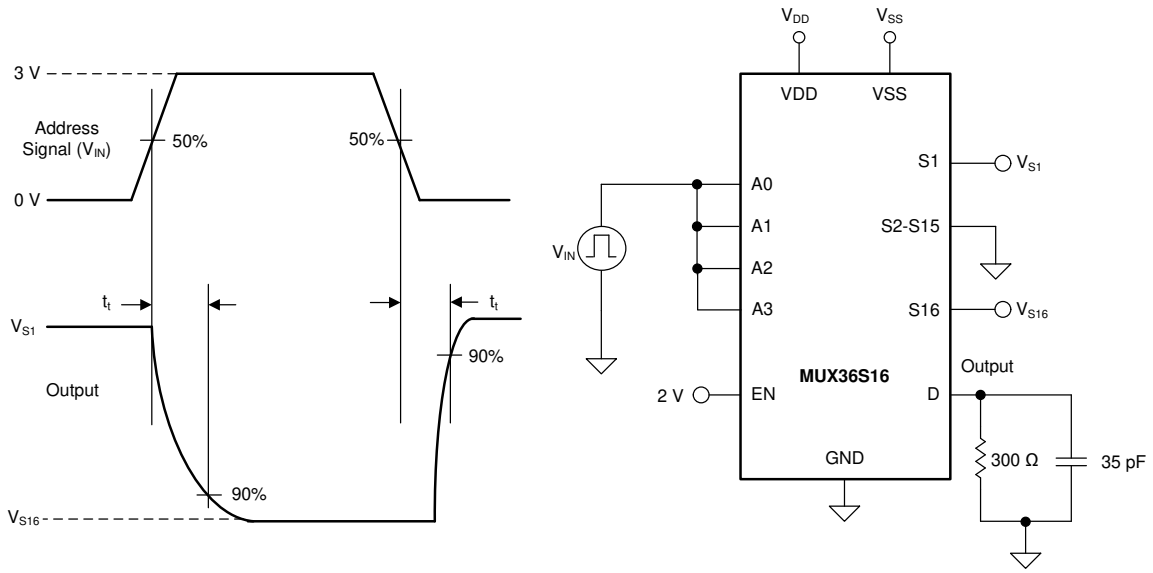

Figure 30. Transition-Time Measurement Setup

7.1.6 Break-Before-Make Delay

Break-before-make delay is a safety feature that prevents two inputs from connecting when the MUX36xxx is switching. The MUX36xxx output first breaks from the ON-state switch before making the connection with the next ON-state switch. The time delay between the *break* and the *make* is known as break-before-make delay. Figure 31 shows the setup used to measure break-before-make delay, denoted by the symbol t_{BBM}.

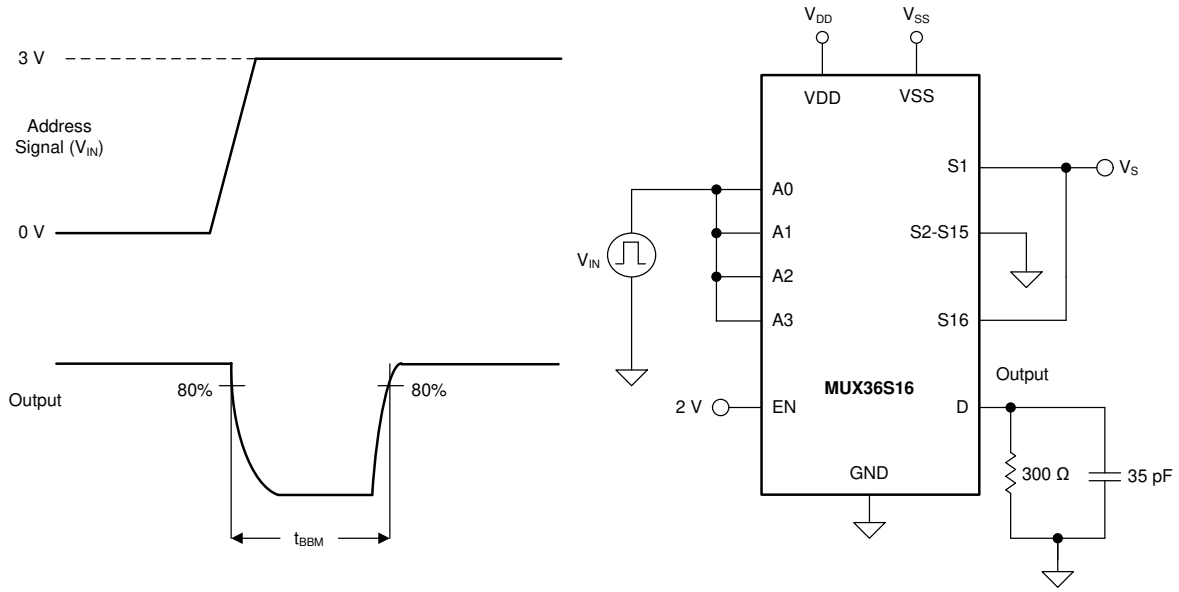

Figure 31. Break-Before-Make Delay Measurement Setup

Copyright © 2016–2019, Texas Instruments Incorporated

7.1.7 Turn-On and Turn-Off Time

Turn-on time is defined as the time taken by the output of the MUX36xxx to rise to 90% final value after the enable signal has risen to 50% final value. Figure 32 shows the setup used to measure turn-on time. Turn-on time is denoted by the symbol t_{ON}.

Turn off time is defined as the time taken by the output of the MUX36xxx to fall to 10% initial value after the enable signal has fallen to 50% initial value. Figure 32 shows the setup used to measure turn-off time. Turn-off time is denoted by the symbol t_{OFF}.

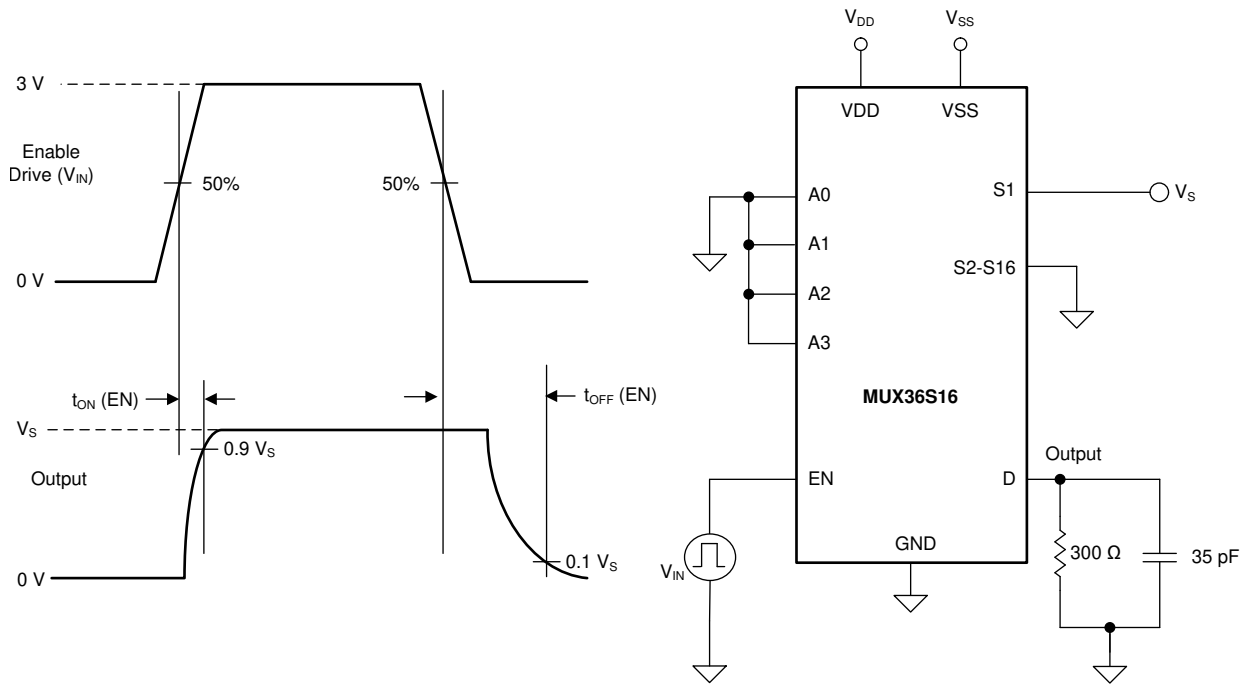

Figure 32. Turn-On and Turn-Off Time Measurement Setup

7.1.8 Charge Injection

The MUX36xxx have a simple transmission-gate topology. Any mismatch in capacitance between the NMOS and PMOS transistors results in a charge injected into the drain or source during the falling or rising edge of the gate signal. The amount of charge injected into the source or drain of the device is known as charge injection, and is denoted by the symbol Q_{INJ}. Figure 33 shows the setup used to measure charge injection.

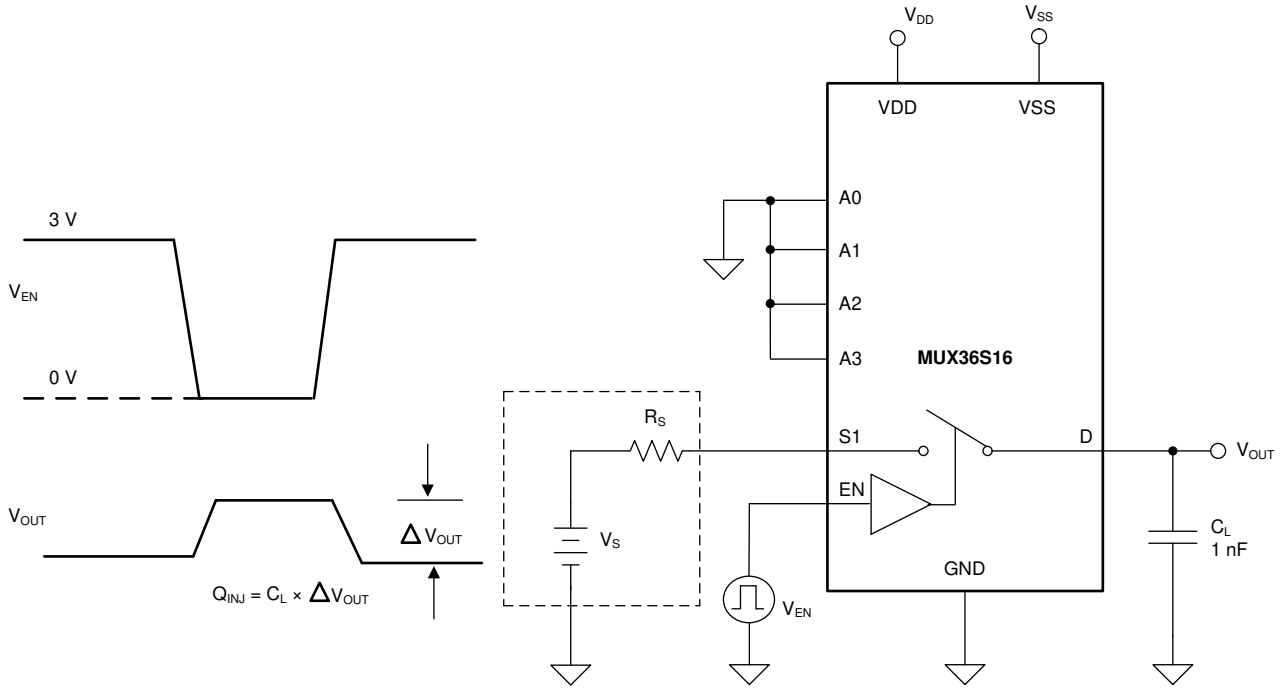

Figure 33. Charge-Injection Measurement Setup

Copyright © 2016–2019, Texas Instruments Incorporated

7.1.9 Off Isolation

Off isolation is defined as the voltage at the drain pin (D, DA, or DB) of the MUX36xxx when a 1-V_{RMS} signal is applied to the source pin (Sx, SxA, or SxB) of an off-channel. Figure 34 shows the setup used to measure off isolation. Use Equation 2 to compute off isolation.

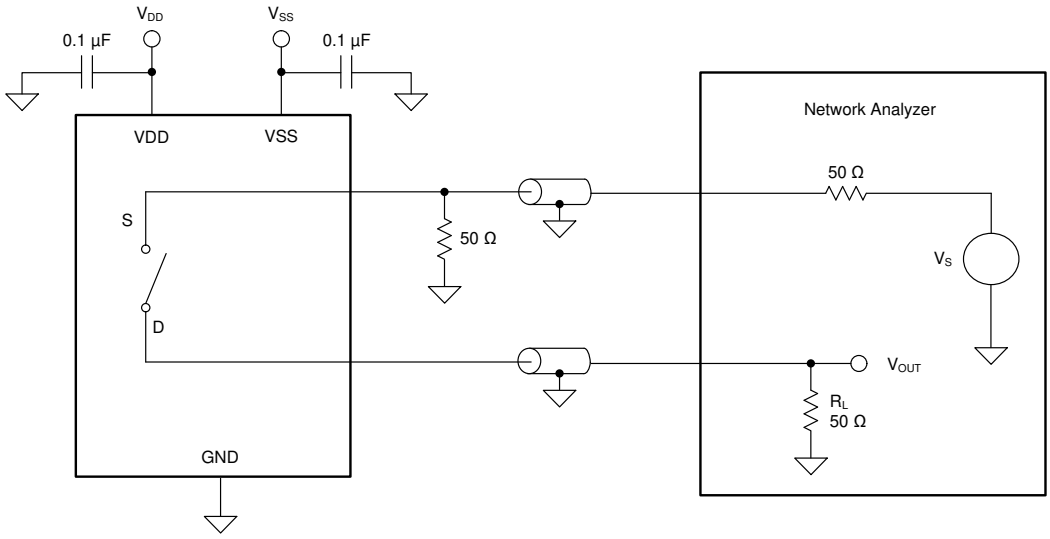

Figure 34. Off Isolation Measurement Setup

$$\text{Off Isolation} = 20 \cdot \text{Log}\left(\frac{V_{OUT}}{V_S}\right) \tag{2}$$

7.1.10 Channel-to-Channel Crosstalk

Channel-to-channel crosstalk is defined as the voltage at the source pin (Sx, SxA, or SxB) of an off-channel, when a 1-V_{RMS} signal is applied at the source pin of an on-channel. Figure 35 shows the setup used to measure channel-to-channel crosstalk. Use Equation 3 to compute, channel-to-channel crosstalk.

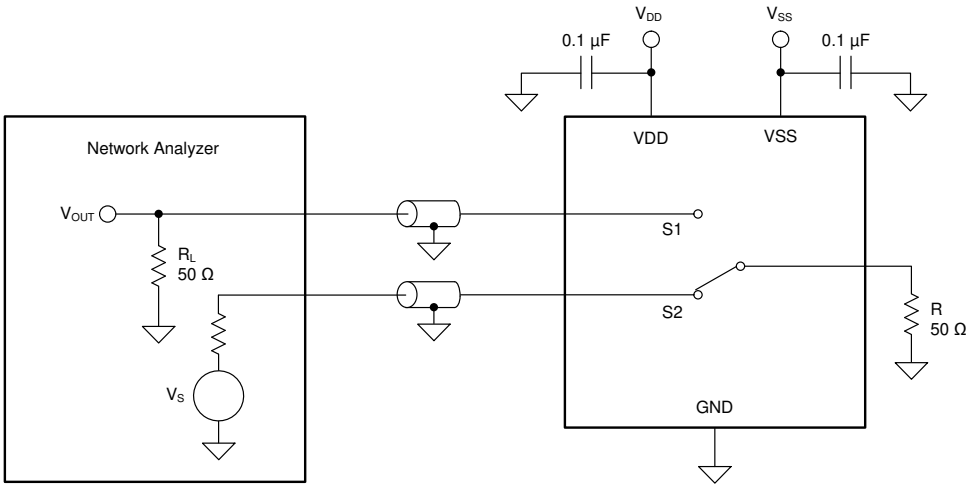

Figure 35. Channel-to-Channel Crosstalk Measurement Setup

$$\text{Channel-to-Channel Crosstalk} = 20 \cdot \text{Log}\left(\frac{V_{OUT}}{V_S}\right) \tag{3}$$

7.1.11 Bandwidth

Bandwidth is defined as the range of frequencies that are attenuated by less than 3 dB when the input is applied to the source pin of an on-channel, and the output measured at the drain pin of the MUX36xxx. Figure 36 shows the setup used to measure bandwidth of the mux. Use Equation 4 to compute the attenuation.

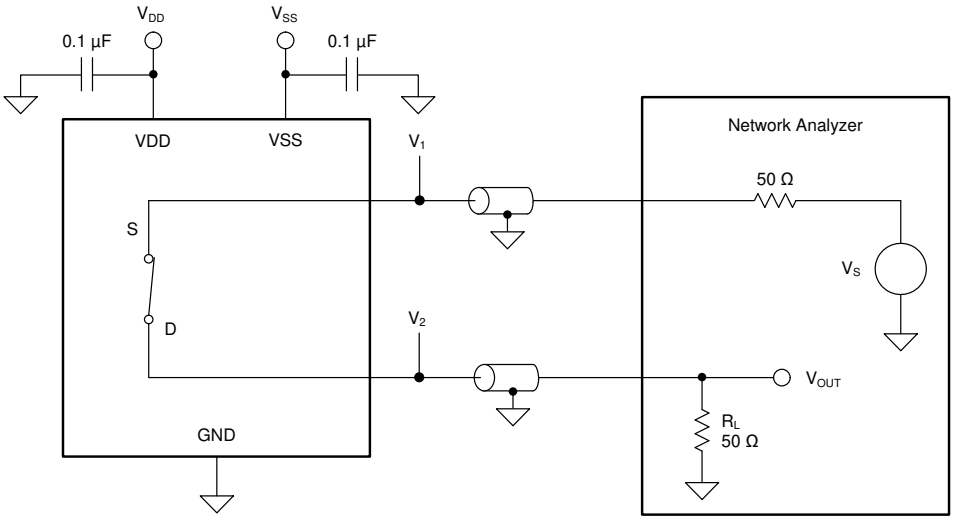

Figure 36. Bandwidth Measurement Setup

$$\text{Attenuation} = 20 \cdot \text{Log}\left(\frac{V_2}{V_1}\right) \tag{4}$$

7.1.12 THD + Noise

The total harmonic distortion (THD) of a signal is a measurement of the harmonic distortion, and is defined as the ratio of the sum of the powers of all harmonic components to the power of the fundamental frequency at the mux output. The on-resistance of the MUX36xxx varies with the amplitude of the input signal and results in distortion when the drain pin is connected to a low-impedance load. Total harmonic distortion plus noise is denoted as THD+N. Figure 37 shows the setup used to measure THD+N of the MUX36xxx.

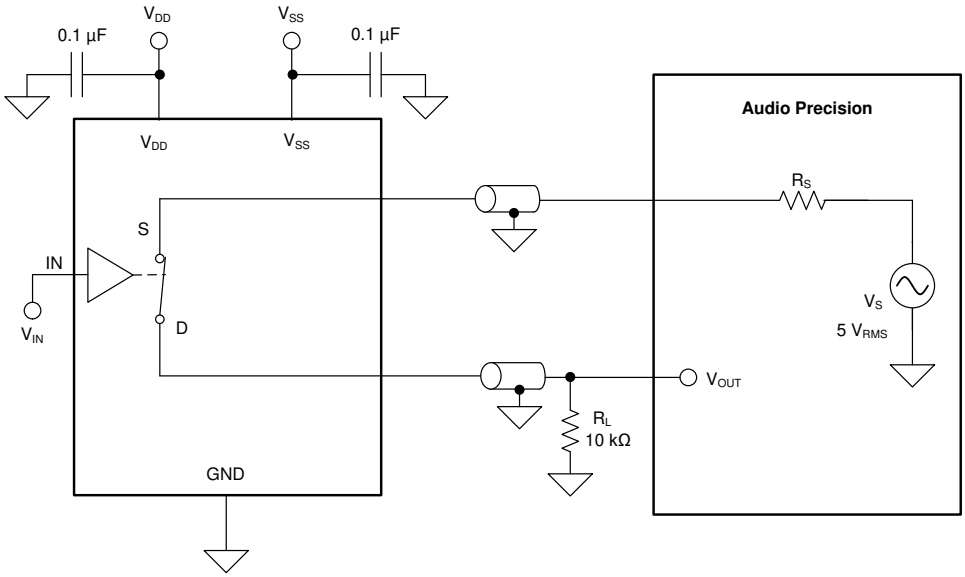

Figure 37. THD+N Measurement Setup

Copyright © 2016–2019, Texas Instruments Incorporated

8 Detailed Description

8.1 Overview

The MUX36xxx are a family of analog multiplexers. The *Functional Block Diagram* section provides a top-level block diagram of both the MUX36S16 and MUX36D08. The MUX36S16 is a 16-channel, single-ended, analog mux. The MUX36D08 is an 8-channel, differential or dual 8:1, single-ended, analog mux. Each channel is turned on or turned off based on the state of the address lines and enable pin.

8.2 Functional Block Diagram

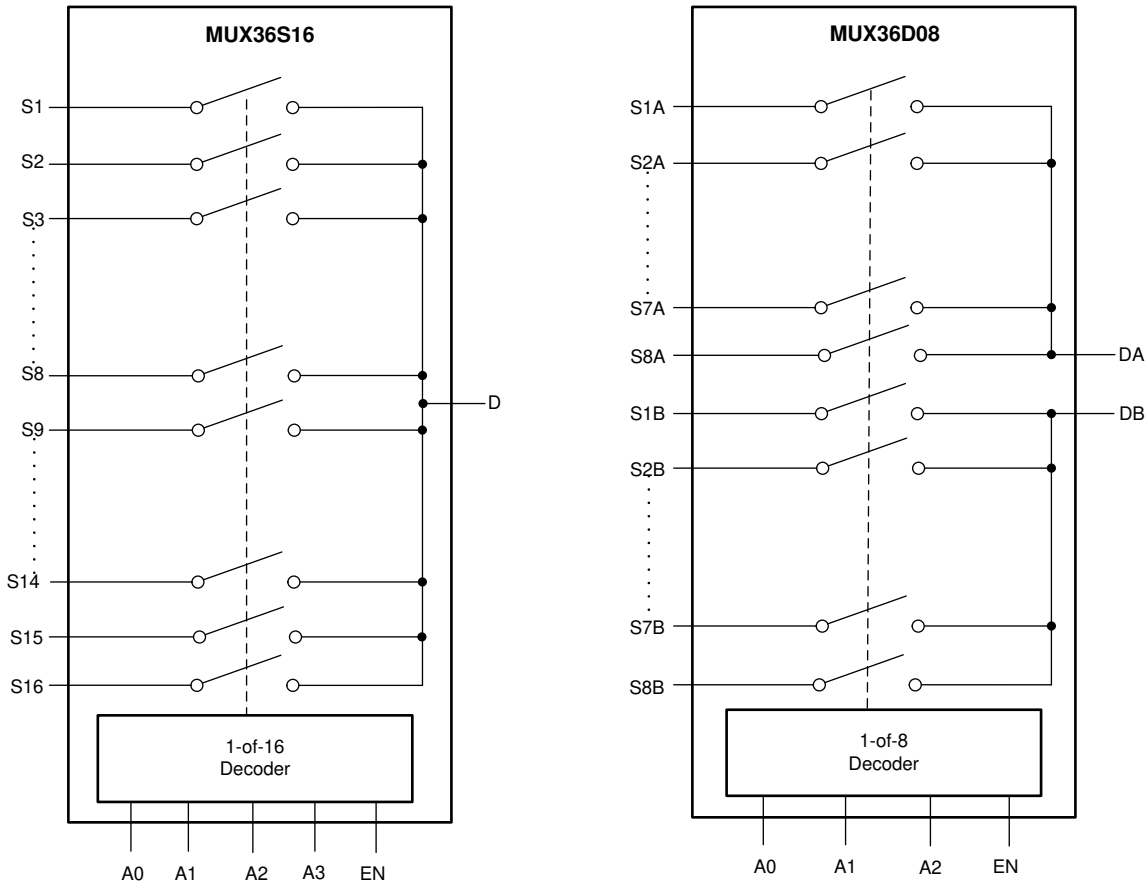

8.3 Feature Description

8.3.1 Ultralow Leakage Current

The MUX36xxx provide extremely low on- and off-leakage currents. The MUX36xxx are capable of switching signals from high source-impedance inputs into a high input-impedance op amp with minimal offset error because of the ultra-low leakage currents. Figure 38 shows typical leakage currents of the MUX36xxx versus temperature.

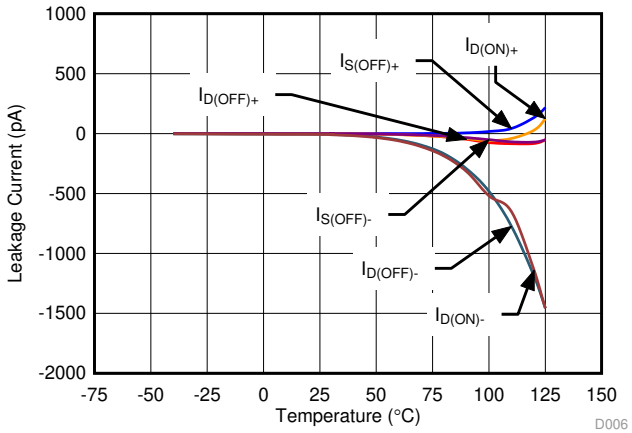

Figure 38. Leakage Current vs Temperature

8.3.2 Ultralow Charge Injection

The MUX36xxx have a simple transmission gate topology, as shown in Figure 39. Any mismatch in the stray capacitance associated with the NMOS and PMOS causes an output level change whenever the switch is opened or closed.

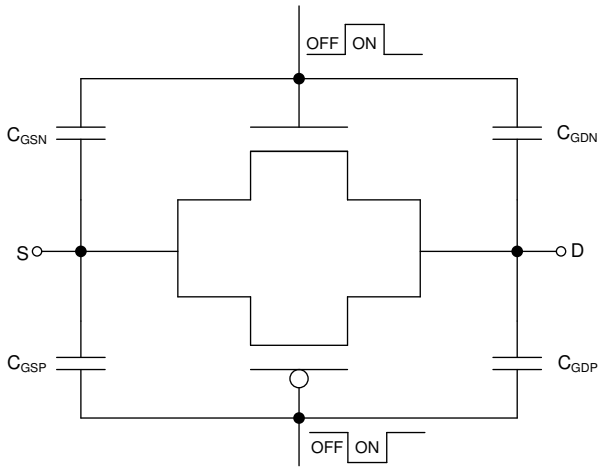

Figure 39. Transmission Gate Topology

Copyright © 2016–2019, Texas Instruments Incorporated

Feature Description (continued)

The MUX36xxx have special charge-injection cancellation circuitry that reduces the source-to-drain charge injection to as low as 0.31 pC at V_S = 0 V, and ±0.9 pC in the full signal range, as shown in Figure 40.

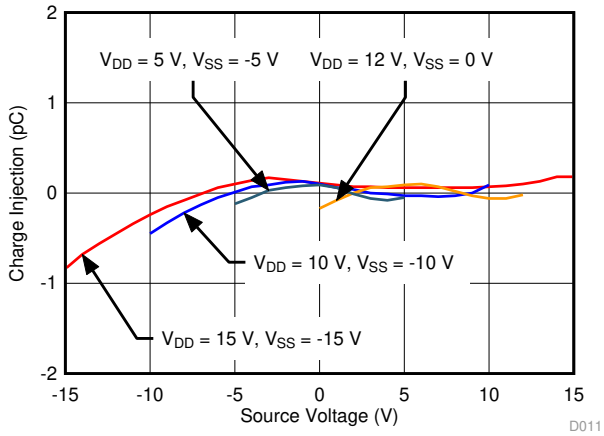

Figure 40. Source-to-Drain Charge Injection

The drain-to-source charge injection becomes important when the device is used as a demultiplexer (demux), where D becomes the input and Sx becomes the output. Figure 41 shows the drain-to-source charge injection across the full signal range.

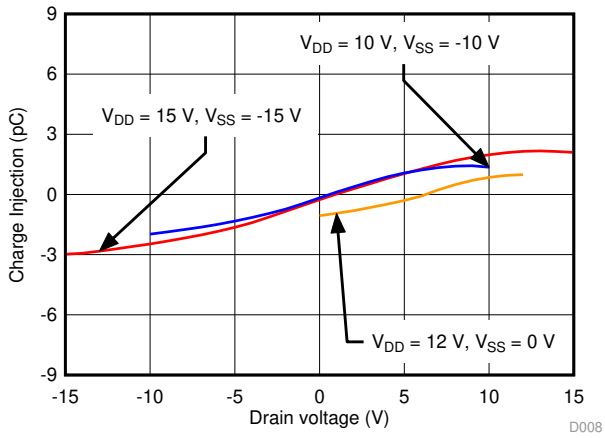

Figure 41. Drain-to-Source Charge Injection

Feature Description (continued)

8.3.3 Bidirectional Operation

The MUX36xxx are operable as both a mux and demux. The source (Sx, SxA, SxB) and drain (D, DA, DB) pins of the MUX36xxx are used either as input or output. Each MUX36xxx channel has very similar characteristics in both directions.

8.3.4 Rail-to-Rail Operation

The valid analog signal for the MUX36xxx ranges from V_{SS} to V_{DD}. The input signal to the MUX36xxx swings from V_{SS} to V_{DD} without any significant degradation in performance. The on-resistance of the MUX36xxx varies with input signal, as shown in Figure 42

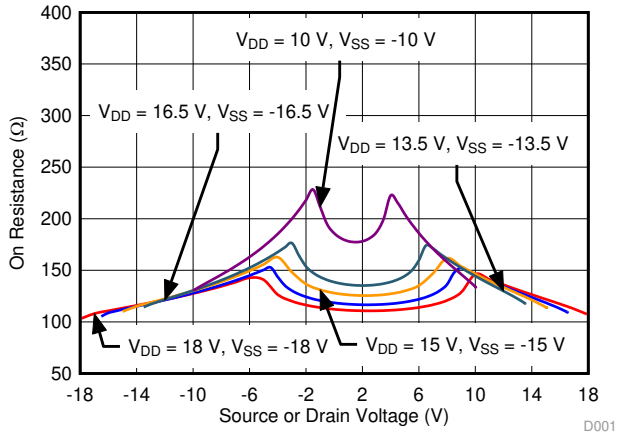

Figure 42. On-resistance vs Source or Drain Voltage

8.4 Device Functional Modes

When the EN pin of the MUX36xxx is pulled high, one of the switches is closed based on the state of the address lines. When the EN pin is pulled low, all the switches are in an open state irrespective of the state of the address lines. The EN pin can be connected to V_{DD} (as high as 36 V).

Copyright © 2016–2019, Texas Instruments Incorporated

9 Application and Implementation

NOTE

Information in the following applications sections is not part of the TI component specification, and TI does not warrant its accuracy or completeness. TI's customers are responsible for determining suitability of components for their purposes. Customers should validate and test their design implementation to confirm system functionality.

9.1 Application Information

The MUX36xxx family offers outstanding input/output leakage currents and ultra-low charge injection. These devices operate up to 36 V, and offer true rail-to-rail input and output. The on-capacitance of the MUX36xxx is very low. These features makes the MUX36xxx a family of precision, robust, high-performance analog multiplexer for high-voltage, industrial applications.

9.2 Typical Application

Figure 43 shows a 16-bit, differential, 8-channel, multiplexed, data-acquisition system. This example is typical in industrial applications that require low distortion and a high-voltage differential input. The circuit uses the ADS8864, a 16-bit, 400-kSPS successive-approximation-resistor (SAR) analog-to-digital converter (ADC), along with a precision, high-voltage, signal-conditioning front end, and a 4-channel differential mux. This TI Precision Design details the process for optimizing the precision, high-voltage, front-end drive circuit using the MUX36D08, OPA192 and OPA140 to achieve excellent dynamic performance and linearity with the ADS8864.

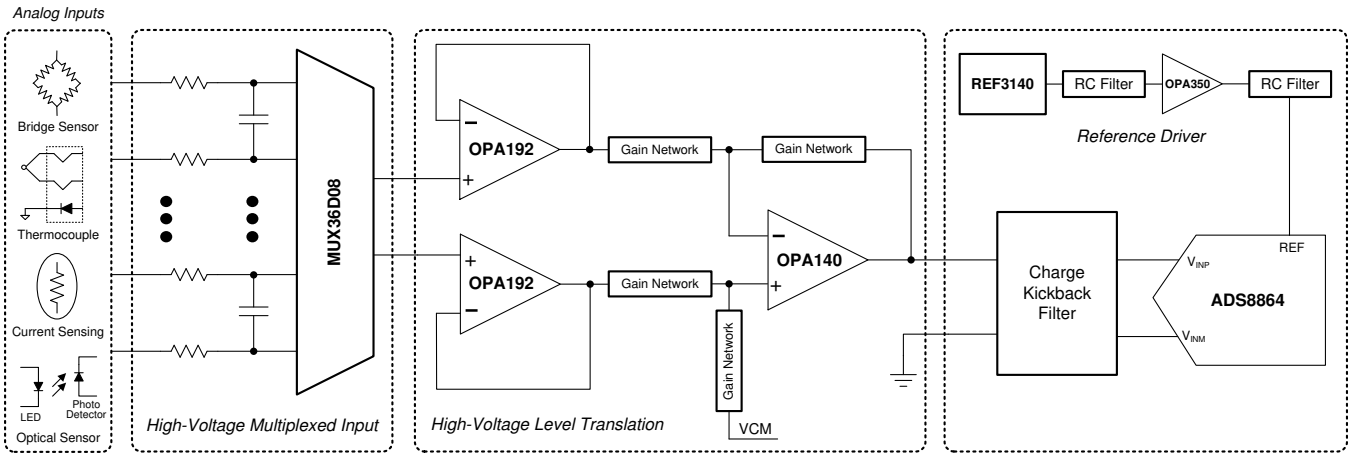

Figure 43. 16-Bit Precision Multiplexed Data-Acquisition System for High-Voltage Inputs With Lowest Distortion

9.2.1 Design Requirements

The primary objective is to design a ±20 V, differential, 8-channel, multiplexed, data-acquisition system with lowest distortion using the 16-bit ADS8864 at a throughput of 400 kSPS for a 10-kHz, full-scale, pure, sine-wave input. The design requirements for this block design are:

- System supply voltage: ±15 V
- ADC supply voltage: 3.3 V
- ADC sampling rate: 400 kSPS
- ADC reference voltage (REFP): 4.096 V
- System input signal: A high-voltage differential input signal with a peak amplitude of 20 V and frequency (f_{IN}) of 10 kHz are applied to each differential input of the mux.

Typical Application (continued)

9.2.2 Detailed Design Procedure

The purpose of this precision design is to design an optimal, high-voltage, multiplexed, data-acquisition system for highest system linearity and fast settling. The overall system block diagram is illustrated in Figure 43. The circuit is a multichannel, data-acquisition signal chain consisting of an input low-pass filter, mux, mux output buffer, attenuating SAR ADC driver, and the reference driver. The architecture allows fast sampling of multiple channels using a single ADC, providing a low-cost solution. This design systematically approaches each analog circuit block to achieve a 16-bit settling for a full-scale input stage voltage and linearity for a 10-kHz sinusoidal input signal at each input channel. Detailed design considerations and component selection procedure can be found in the TI Precision Design TIPD151, *16-Bit, 400-kSPS, 4-Channel Multiplexed Data-Acquisition System for High-Voltage Inputs with Lowest Distortion*.

9.2.3 Application Curve

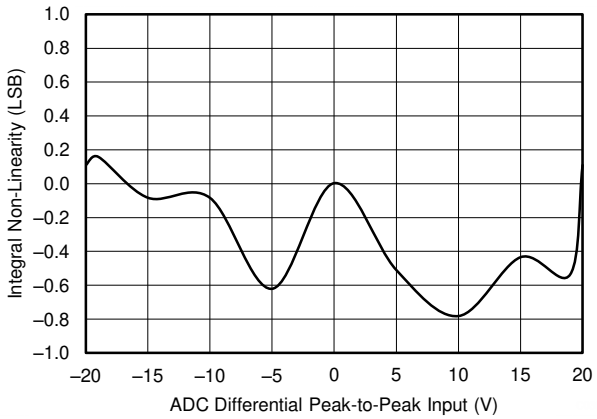

Figure 44. ADC 16-Bit Linearity Error for the Multiplexed Data-Acquisition Block

Copyright © 2016–2019, Texas Instruments Incorporated

10 Power Supply Recommendations

The MUX36xxx operates across a wide supply range of ±5 V to ±18 V (10 V to 36 V in single-supply mode). The devices also perform well with unsymmetric supplies such as V_{DD} = 12 V and V_{SS}= –5 V. For reliable operation, use a supply decoupling capacitor ranging between 0.1 µF to 10 µF at both the VDD and VSS pins to ground.

The on-resistance of the MUX36xxx varies with supply voltage, as illustrated in Figure 45

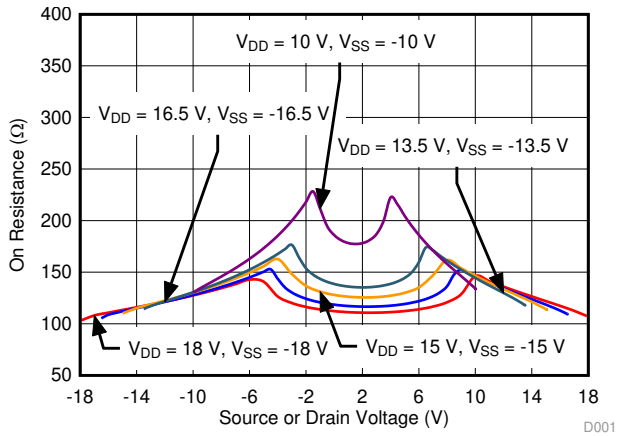

Figure 45. On-Resistance Variation With Supply and Input Voltage

11 Layout

11.1 Layout Guidelines

Figure 46 illustrates an example of a PCB layout with the MUX36S16IPW, and Figure 47 illustrates an example of a PCB layout with MUX36D08IPW.

Some key considerations are:

1. Decouple the VDD and VSS pins with a 0.1-µF capacitor, placed as close to the pin as possible. Make sure that the capacitor voltage rating is sufficient for the V_{DD} and V_{SS} supplies.
2. Keep the input lines as short as possible. In case of the differential signal, make sure the A inputs and B inputs are as symmetric as possible.
3. Use a solid ground plane to help distribute heat and reduce electromagnetic interference (EMI) noise pickup.
4. Do not run sensitive analog traces in parallel with digital traces. Avoid crossing digital and analog traces if possible, and only make perpendicular crossings when necessary.

11.2 Layout Example

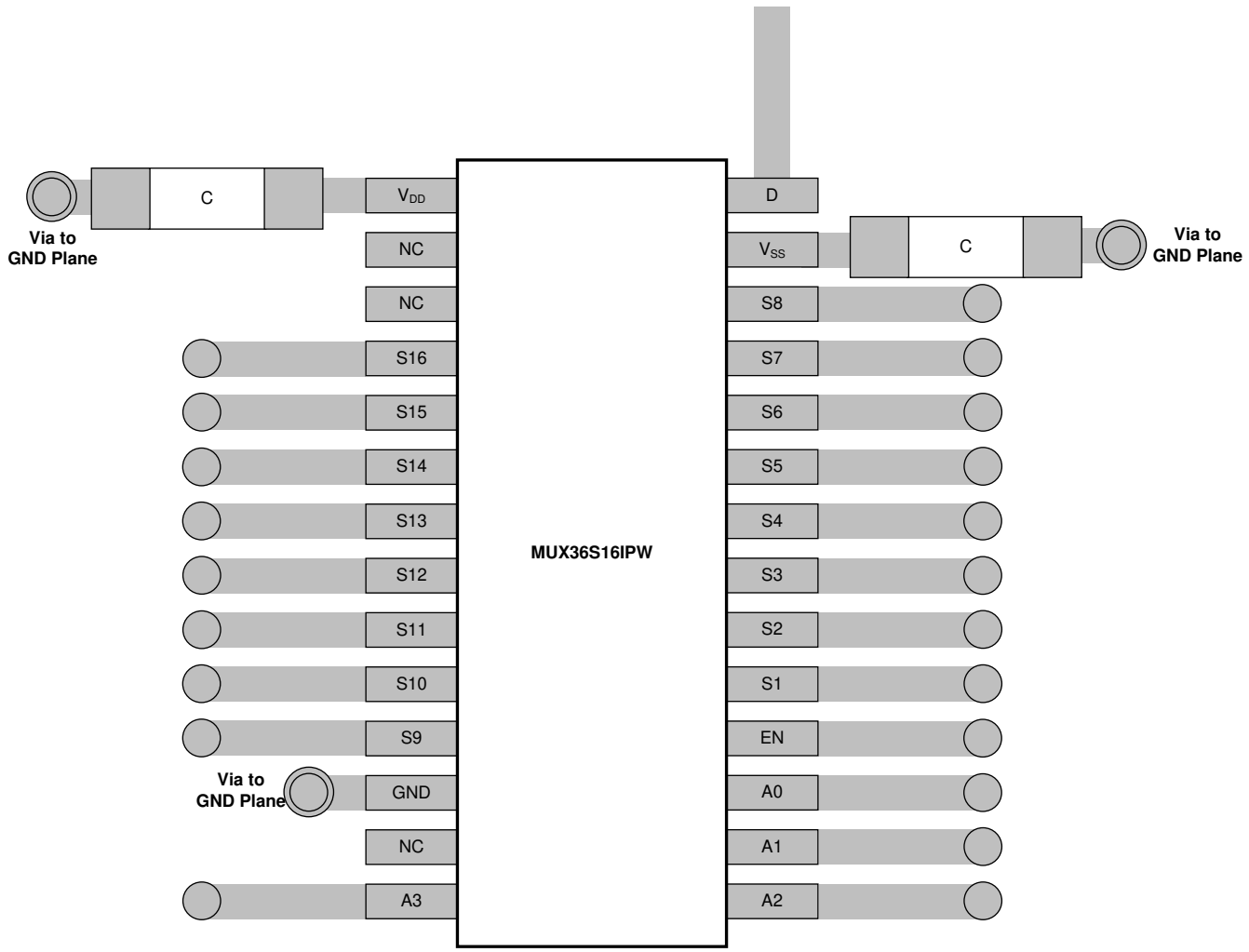

Figure 46. MUX36S16IPW Layout Example

Copyright © 2016–2019, Texas Instruments Incorporated

Layout Example (continued)

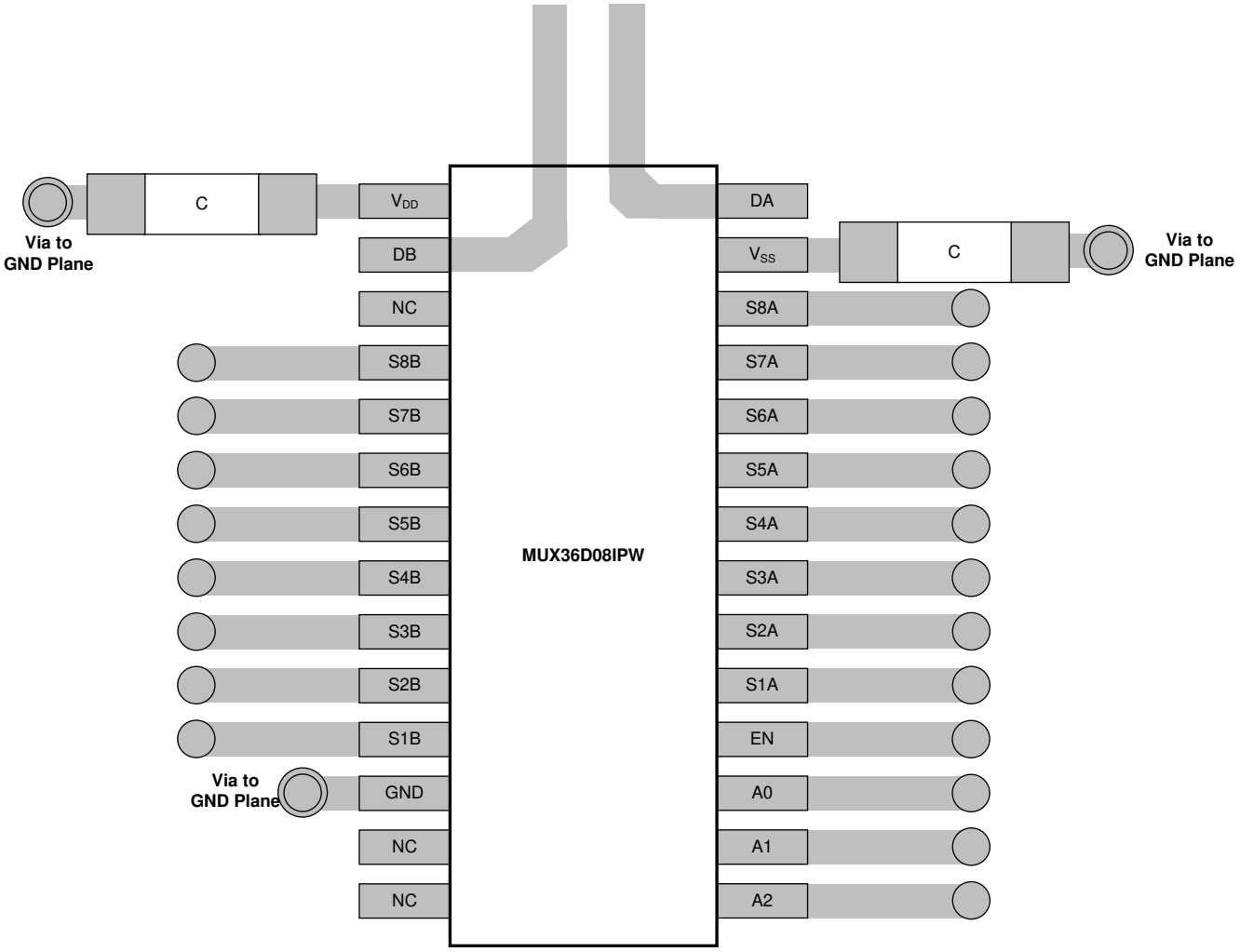

Figure 47. MUX36D08IPW Layout Example

12 Device and Documentation Support

12.1 Documentation Support

12.1.1 Related Documentation

For related documentation see the following:

- *ADS8864 16-Bit, 400-kSPS, Serial Interface, microPower, Miniature, Single-Ended Input, SAR Analog-to-Digital Converter* (SBAS572)
- *OPAx192 36-V, Precision, Rail-to-Rail Input/Output, Low Offset Voltage, Low Input Bias Current Op Amp with e-trim* (SBOS620)
- *OPAx140 High-Precision, Low-Noise, Rail-to-Rail Output, 11-MHz JFET Op Amp* (SBOS498)

12.2 Related Links

The table below lists quick access links. Categories include technical documents, support and community resources, tools and software, and quick access to order now.

Table 3. Related Links

PARTS	PRODUCT FOLDER	ORDER NOW	TECHNICAL DOCUMENTS	TOOLS & SOFTWARE	SUPPORT & COMMUNITY
MUX36S16	Click here	Click here	Click here	Click here	Click here
MUX36D08	Click here	Click here	Click here	Click here	Click here

12.3 Receiving Notification of Documentation Updates

To receive notification of documentation updates, navigate to the device product folder on ti.com. In the upper right corner, click on *Alert me* to register and receive a weekly digest of any product information that has changed. For change details, review the revision history included in any revised document.

12.4 Community Resources

TI E2E™ support forums are an engineer's go-to source for fast, verified answers and design help — straight from the experts. Search existing answers or ask your own question to get the quick design help you need.

Linked content is provided "AS IS" by the respective contributors. They do not constitute TI specifications and do not necessarily reflect TI's views; see TI's Terms of Use.

12.5 Trademarks

E2E is a trademark of Texas Instruments.
All other trademarks are the property of their respective owners.

12.6 Electrostatic Discharge Caution

This integrated circuit can be damaged by ESD. Texas Instruments recommends that all integrated circuits be handled with appropriate precautions. Failure to observe proper handling and installation procedures can cause damage.

ESD damage can range from subtle performance degradation to complete device failure. Precision integrated circuits may be more susceptible to damage because very small parametric changes could cause the device not to meet its published specifications.

12.7 Glossary

SLYZ022 — *TI Glossary*.

This glossary lists and explains terms, acronyms, and definitions.

13 Mechanical, Packaging, and Orderable Information

The following pages include mechanical, packaging, and orderable information. This information is the most current data available for the designated devices. This data is subject to change without notice and revision of this document. For browser-based versions of this data sheet, refer to the left-hand navigation.

Copyright © 2016–2019, Texas Instruments Incorporated

PACKAGING INFORMATION

Orderable part number	Status (1)	Material type (2)	Package | Pins	Package qty | Carrier	RoHS (3)	Lead finish/ Ball material (4)	MSL rating/ Peak reflow (5)	Op temp (°C)	Part marking (6)
MUX36D08IDWR	Active	Production	SOIC (DW) | 28	1000 | LARGE T&R	Yes	NIPDAU	Level-3-260C-168 HR	-40 to 125	MUX36D08D
MUX36D08IDWR.B	Active	Production	SOIC (DW) | 28	1000 | LARGE T&R	Yes	NIPDAU	Level-3-260C-168 HR	-40 to 125	MUX36D08D
MUX36D08IDWRG4.B	Active	Production	SOIC (DW) | 28	1000 | LARGE T&R	Yes	NIPDAU	Level-3-260C-168 HR	-40 to 125	MUX36D08D
MUX36D08IPW	Active	Production	TSSOP (PW) | 28	50 | TUBE	Yes	NIPDAU	Level-3-260C-168 HR	-40 to 125	MUX36D080A
MUX36D08IPW.B	Active	Production	TSSOP (PW) | 28	50 | TUBE	Yes	NIPDAU	Level-3-260C-168 HR	-40 to 125	MUX36D080A
MUX36D08IPWR	Active	Production	TSSOP (PW) | 28	2000 | LARGE T&R	Yes	NIPDAU	Level-3-260C-168 HR	-40 to 125	MUX36D080A
MUX36D08IPWR.B	Active	Production	TSSOP (PW) | 28	2000 | LARGE T&R	Yes	NIPDAU	Level-3-260C-168 HR	-40 to 125	MUX36D080A
MUX36D08IPWRG4.B	Active	Production	TSSOP (PW) | 28	2000 | LARGE T&R	Yes	NIPDAU	Level-3-260C-168 HR	-40 to 125	MUX36D080A
MUX36D08IRSNR	Active	Production	QFN (RSN) | 32	3000 | LARGE T&R	Yes	NIPDAU	Level-1-260C-UNLIM	-40 to 125	MUX 36D08
MUX36D08IRSNR.B	Active	Production	QFN (RSN) | 32	3000 | LARGE T&R	Yes	NIPDAU	Level-1-260C-UNLIM	-40 to 125	MUX 36D08
MUX36D08IRSNRG4	Active	Production	QFN (RSN) | 32	3000 | LARGE T&R	Yes	NIPDAU	Level-1-260C-UNLIM	-40 to 125	MUX 36D08
MUX36D08IRSNRG4.B	Active	Production	QFN (RSN) | 32	3000 | LARGE T&R	Yes	NIPDAU	Level-1-260C-UNLIM	-40 to 125	MUX 36D08
MUX36D08IRTVR	Active	Production	WQFN (RTV) | 32	3000 | LARGE T&R	Yes	NIPDAU	Level-1-260C-UNLIM	-40 to 125	MUX 36D08
MUX36D08IRTVR.B	Active	Production	WQFN (RTV) | 32	3000 | LARGE T&R	Yes	NIPDAU	Level-1-260C-UNLIM	-40 to 125	MUX 36D08
MUX36S16IDWR	Active	Production	SOIC (DW) | 28	1000 | LARGE T&R	Yes	NIPDAU	Level-3-260C-168 HR	-40 to 125	MUX36S16DA
MUX36S16IDWR.B	Active	Production	SOIC (DW) | 28	1000 | LARGE T&R	Yes	NIPDAU	Level-3-260C-168 HR	-40 to 125	MUX36S16DA
MUX36S16IPW	Active	Production	TSSOP (PW) | 28	50 | TUBE	Yes	NIPDAU	Level-3-260C-168 HR	-40 to 125	MUX36S160A
MUX36S16IPW.B	Active	Production	TSSOP (PW) | 28	50 | TUBE	Yes	NIPDAU	Level-3-260C-168 HR	-40 to 125	MUX36S160A
MUX36S16IPWR	Active	Production	TSSOP (PW) | 28	2000 | LARGE T&R	Yes	NIPDAU	Level-3-260C-168 HR	-40 to 125	MUX36S160A
MUX36S16IPWR.B	Active	Production	TSSOP (PW) | 28	2000 | LARGE T&R	Yes	NIPDAU	Level-3-260C-168 HR	-40 to 125	MUX36S160A
MUX36S16IRSNR	Active	Production	QFN (RSN) | 32	3000 | LARGE T&R	Yes	NIPDAU	Level-1-260C-UNLIM	-40 to 125	MUX 36S16
MUX36S16IRSNR.B	Active	Production	QFN (RSN) | 32	3000 | LARGE T&R	Yes	NIPDAU	Level-1-260C-UNLIM	-40 to 125	MUX 36S16

Orderable part number	Status (1)	Material type (2)	Package | Pins	Package qty | Carrier	RoHS (3)	Lead finish/ Ball material (4)	MSL rating/ Peak reflow (5)	Op temp (°C)	Part marking (6)
MUX36S16IRSNRG4	Active	Production	QFN (RSN) | 32	3000 | LARGE T&R	Yes	NIPDAU	Level-1-260C-UNLIM	-40 to 125	MUX 36S16
MUX36S16IRSNRG4.B	Active	Production	QFN (RSN) | 32	3000 | LARGE T&R	Yes	NIPDAU	Level-1-260C-UNLIM	-40 to 125	MUX 36S16
MUX36S16IRTVR	Active	Production	WQFN (RTV) | 32	3000 | LARGE T&R	Yes	NIPDAU	Level-1-260C-UNLIM	-40 to 125	MUX 36S16
MUX36S16IRTVR.B	Active	Production	WQFN (RTV) | 32	3000 | LARGE T&R	Yes	NIPDAU	Level-1-260C-UNLIM	-40 to 125	MUX 36S16

(1) **Status:** For more details on status, see our product life cycle.

(2) **Material type:** When designated, preproduction parts are prototypes/experimental devices, and are not yet approved or released for full production. Testing and final process, including without limitation quality assurance, reliability performance testing, and/or process qualification, may not yet be complete, and this item is subject to further changes or possible discontinuation. If available for ordering, purchases will be subject to an additional waiver at checkout, and are intended for early internal evaluation purposes only. These items are sold without warranties of any kind.

(3) **RoHS values:** Yes, No, RoHS Exempt. See the TI RoHS Statement for additional information and value definition.

(4) **Lead finish/Ball material:** Parts may have multiple material finish options. Finish options are separated by a vertical ruled line. Lead finish/Ball material values may wrap to two lines if the finish value exceeds the maximum column width.

(5) **MSL rating/Peak reflow:** The moisture sensitivity level ratings and peak solder (reflow) temperatures. In the event that a part has multiple moisture sensitivity ratings, only the lowest level per JEDEC standards is shown. Refer to the shipping label for the actual reflow temperature that will be used to mount the part to the printed circuit board.

(6) **Part marking:** There may be an additional marking, which relates to the logo, the lot trace code information, or the environmental category of the part.

Multiple part markings will be inside parentheses. Only one part marking contained in parentheses and separated by a "~" will appear on a part. If a line is indented then it is a continuation of the previous line and the two combined represent the entire part marking for that device.

Important Information and Disclaimer: The information provided on this page represents TI's knowledge and belief as of the date that it is provided. TI bases its knowledge and belief on information provided by third parties, and makes no representation or warranty as to the accuracy of such information. Efforts are underway to better integrate information from third parties. TI has taken and continues to take reasonable steps to provide representative and accurate information but may not have conducted destructive testing or chemical analysis on incoming materials and chemicals. TI and TI suppliers consider certain information to be proprietary, and thus CAS numbers and other limited information may not be available for release.

In no event shall TI's liability arising out of such information exceed the total purchase price of the TI part(s) at issue in this document sold by TI to Customer on an annual basis.

TAPE AND REEL INFORMATION

REEL DIMENSIONS

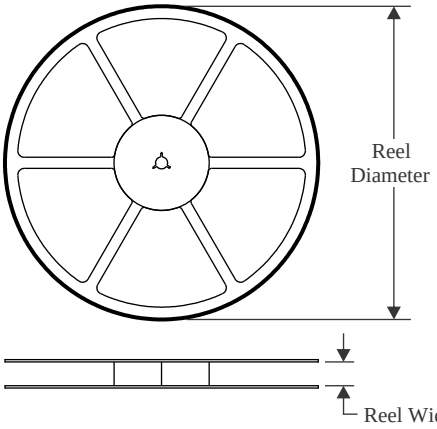

TAPE DIMENSIONS

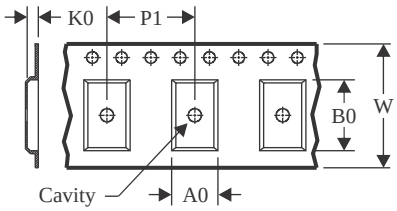

A0	Dimension designed to accommodate the component width
B0	Dimension designed to accommodate the component length
K0	Dimension designed to accommodate the component thickness
W	Overall width of the carrier tape
P1	Pitch between successive cavity centers

QUADRANT ASSIGNMENTS FOR PIN 1 ORIENTATION IN TAPE

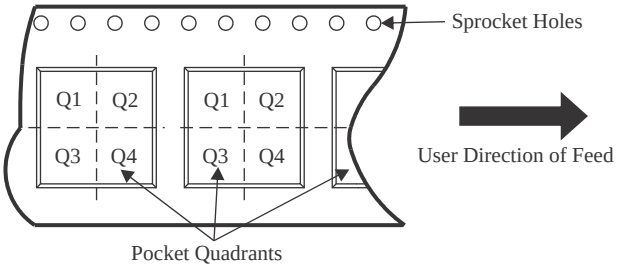

*All dimensions are nominal

Device	Package Type	Package Drawing	Pins	SPQ	Reel Diameter (mm)	Reel Width W1 (mm)	A0 (mm)	B0 (mm)	K0 (mm)	P1 (mm)	W (mm)	Pin1 Quadrant
MUX36D08IDWR	SOIC	DW	28	1000	330.0	32.4	11.35	18.67	3.1	16.0	32.0	Q1
MUX36D08IPWR	TSSOP	PW	28	2000	330.0	16.4	6.9	10.2	1.8	12.0	16.0	Q1
MUX36D08IPWR	TSSOP	PW	28	2000	330.0	16.4	6.9	10.2	1.8	12.0	16.0	Q1
MUX36D08IRSNR	QFN	RSN	32	3000	330.0	12.4	4.25	4.25	1.15	8.0	12.0	Q2
MUX36D08IRSNRG4	QFN	RSN	32	3000	330.0	12.4	4.25	4.25	1.15	8.0	12.0	Q2
MUX36D08IRTVR	WQFN	RTV	32	3000	330.0	12.4	5.3	5.3	1.1	8.0	12.0	Q2
MUX36S16IDWR	SOIC	DW	28	1000	330.0	32.4	11.35	18.67	3.1	16.0	32.0	Q1
MUX36S16IPWR	TSSOP	PW	28	2000	330.0	16.4	6.9	10.2	1.8	12.0	16.0	Q1
MUX36S16IPWR	TSSOP	PW	28	2000	330.0	16.4	6.9	10.2	1.8	12.0	16.0	Q1
MUX36S16IRSNR	QFN	RSN	32	3000	330.0	12.4	4.25	4.25	1.15	8.0	12.0	Q2
MUX36S16IRSNRG4	QFN	RSN	32	3000	330.0	12.4	4.25	4.25	1.15	8.0	12.0	Q2
MUX36S16IRTVR	WQFN	RTV	32	3000	330.0	12.4	5.3	5.3	1.1	8.0	12.0	Q2

TAPE AND REEL BOX DIMENSIONS

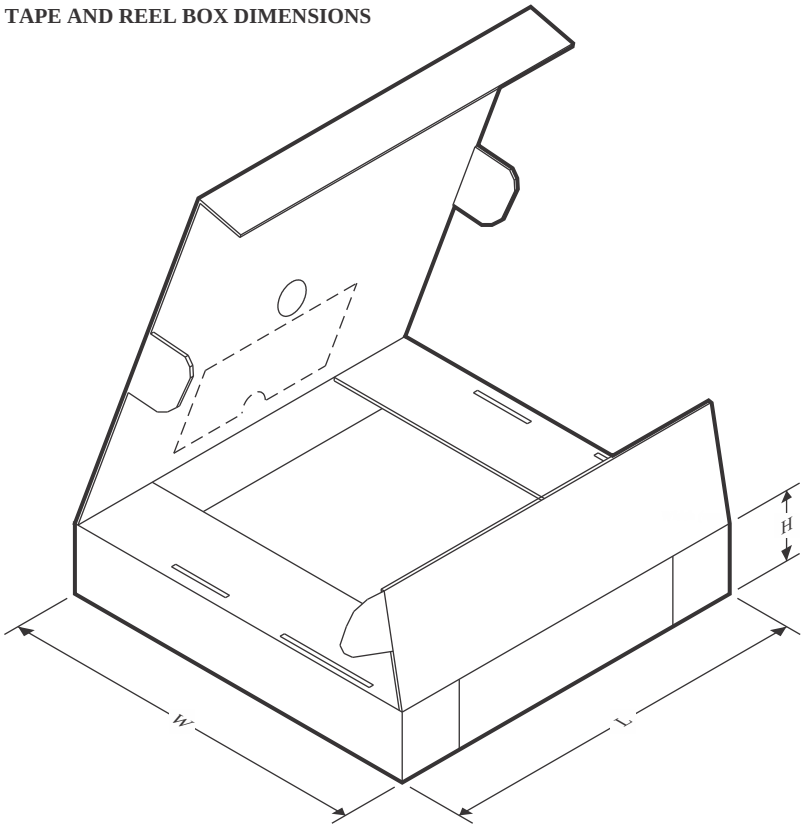

*All dimensions are nominal

Device	Package Type	Package Drawing	Pins	SPQ	Length (mm)	Width (mm)	Height (mm)
MUX36D08IDWR	SOIC	DW	28	1000	350.0	350.0	66.0
MUX36D08IPWR	TSSOP	PW	28	2000	350.0	350.0	43.0
MUX36D08IPWR	TSSOP	PW	28	2000	350.0	350.0	43.0
MUX36D08IRSNR	QFN	RSN	32	3000	367.0	367.0	35.0
MUX36D08IRSNRG4	QFN	RSN	32	3000	367.0	367.0	35.0
MUX36D08IRTVR	WQFN	RTV	32	3000	367.0	367.0	35.0
MUX36S16IDWR	SOIC	DW	28	1000	350.0	350.0	66.0
MUX36S16IPWR	TSSOP	PW	28	2000	350.0	350.0	43.0
MUX36S16IPWR	TSSOP	PW	28	2000	350.0	350.0	43.0
MUX36S16IRSNR	QFN	RSN	32	3000	367.0	367.0	35.0
MUX36S16IRSNRG4	QFN	RSN	32	3000	367.0	367.0	35.0
MUX36S16IRTVR	WQFN	RTV	32	3000	367.0	367.0	35.0

TUBE

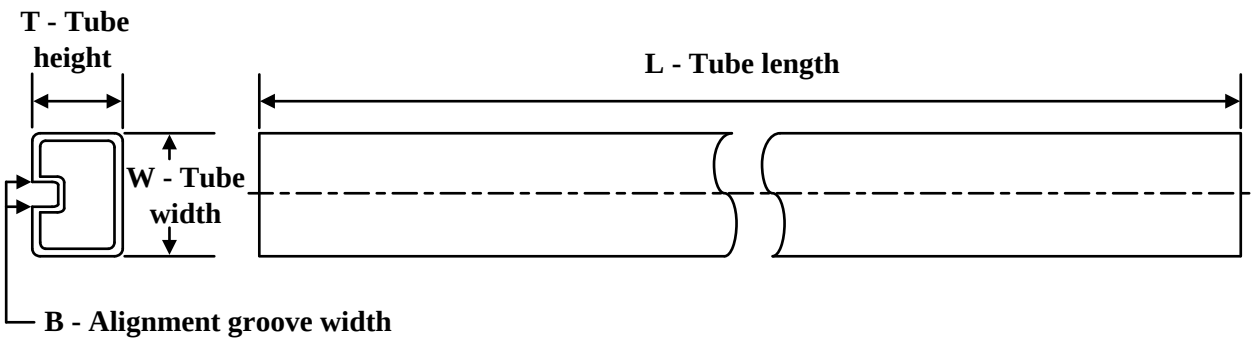

*All dimensions are nominal

Device	Package Name	Package Type	Pins	SPQ	L (mm)	W (mm)	T (µm)	B (mm)
MUX36D08IPW	PW	TSSOP	28	50	530	10.2	3600	3.5
MUX36D08IPW.B	PW	TSSOP	28	50	530	10.2	3600	3.5
MUX36S16IPW	PW	TSSOP	28	50	530	10.2	3600	3.5
MUX36S16IPW.B	PW	TSSOP	28	50	530	10.2	3600	3.5

RTV (S-PWQFN-N32) PLASTIC QUAD FLATPACK NO-LEAD

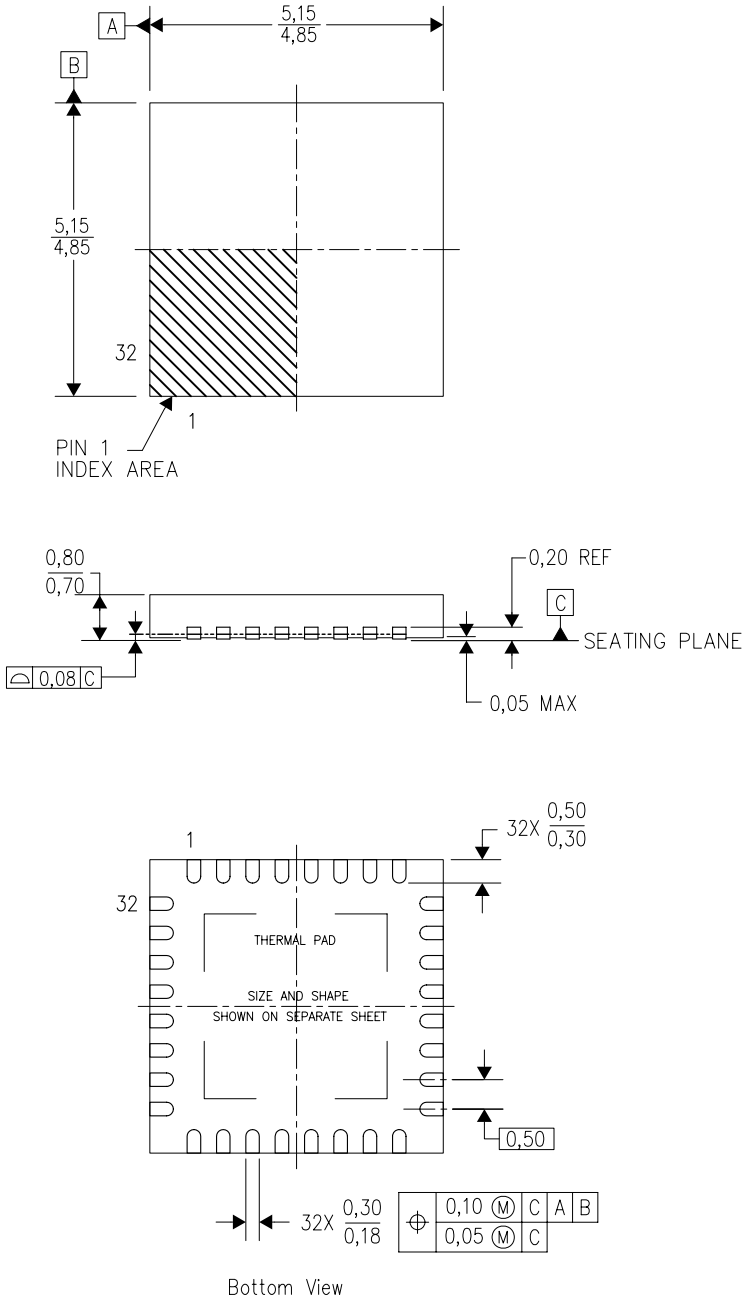

4206245/C 10/11

NOTES:
A. All linear dimensions are in millimeters. Dimensioning and tolerancing per ASME Y14.5-1994.
B. This drawing is subject to change without notice.
C. Quad Flatpack, No-Leads (QFN) package configuration.
D. The package thermal pad must be soldered to the board for thermal and mechanical performance.
E. See the additional figure in the Product Data Sheet for details regarding the exposed thermal pad features and dimensions.
F. Falls within JEDEC MO-220.

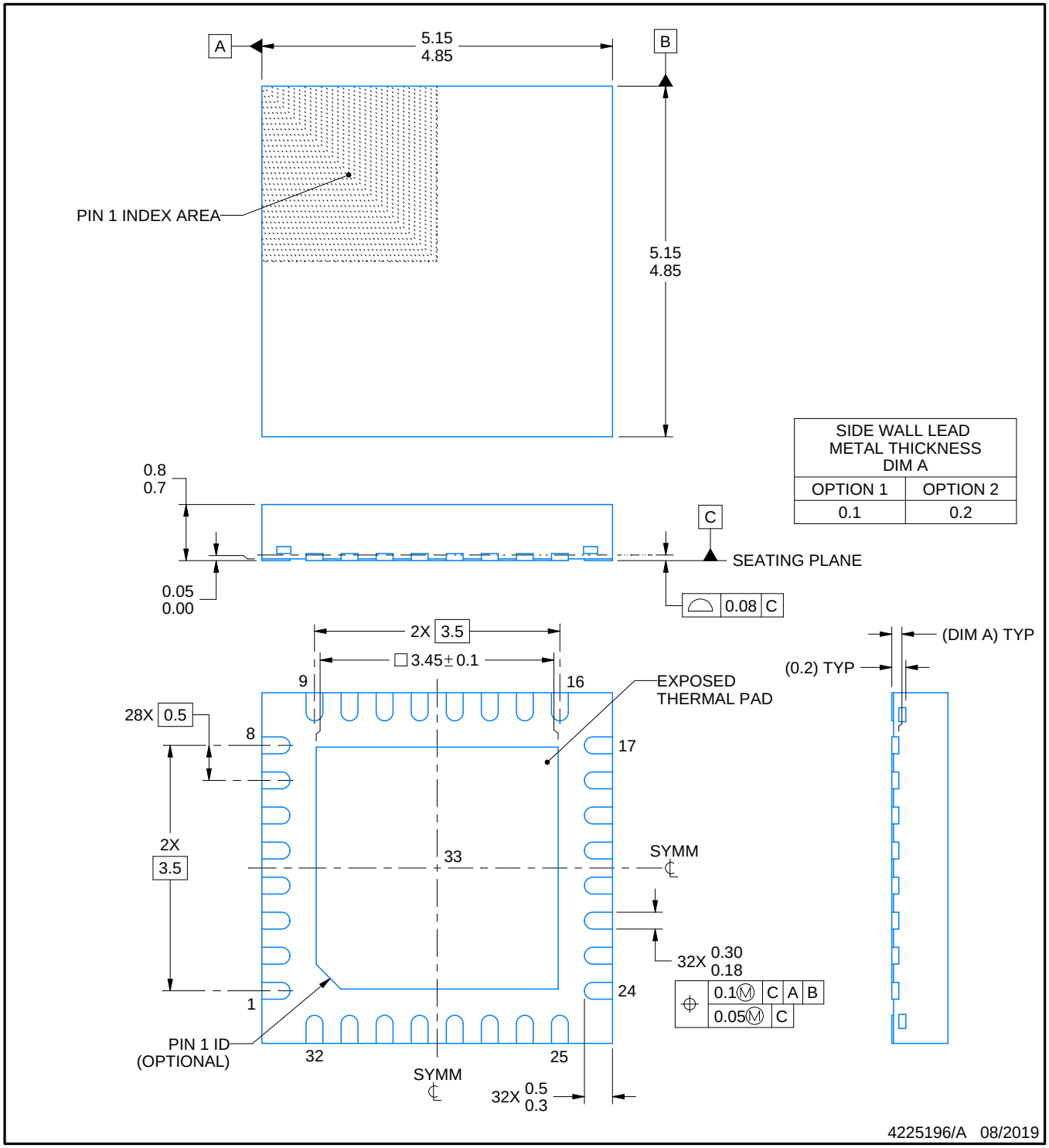

SIDE WALL LEAD METAL THICKNESS DIM A	
OPTION 1	OPTION 2
0.1	0.2

NOTES:

1. All linear dimensions are in millimeters. Any dimensions in parenthesis are for reference only. Dimensioning and tolerancing per ASME Y14.5M.
2. This drawing is subject to change without notice.
3. The package thermal pad must be soldered to the printed circuit board for thermal and mechanical performance.

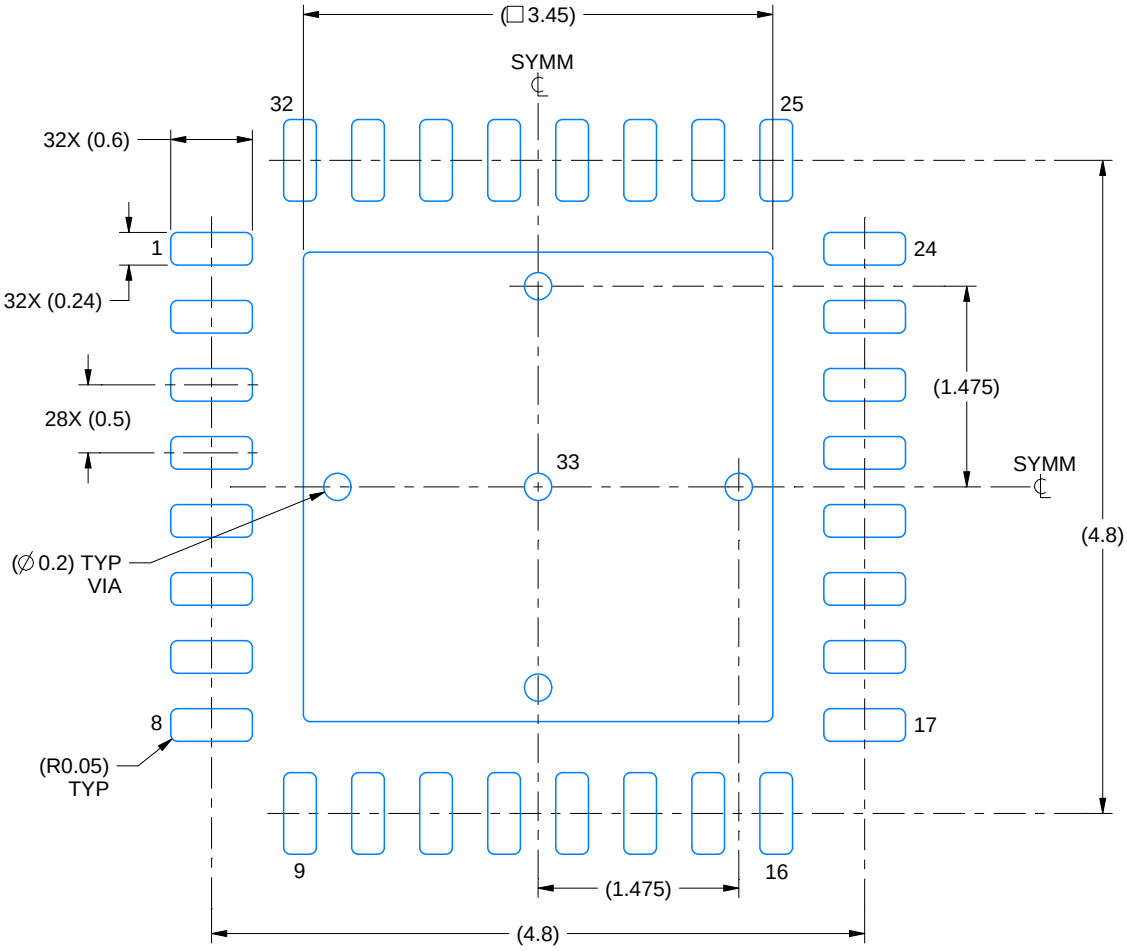

LAND PATTERN EXAMPLE
SCALE:18X

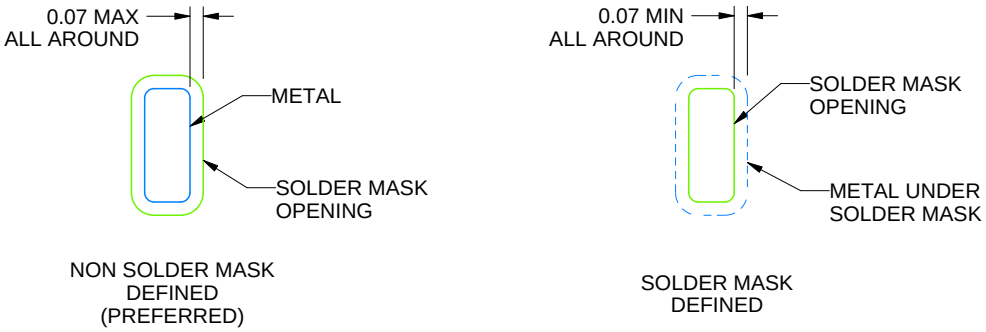

SOLDER MASK DETAILS

4225196/A 08/2019

NOTES: (continued)

4. This package is designed to be soldered to a thermal pad on the board. For more information, see Texas Instruments literature number SLUA271 (www.ti.com/lit/slua271).
5. Vias are optional depending on application, refer to device data sheet. If any vias are implemented, refer to their locations shown on this view. It is recommended that vias under paste be filled, plugged or tented.

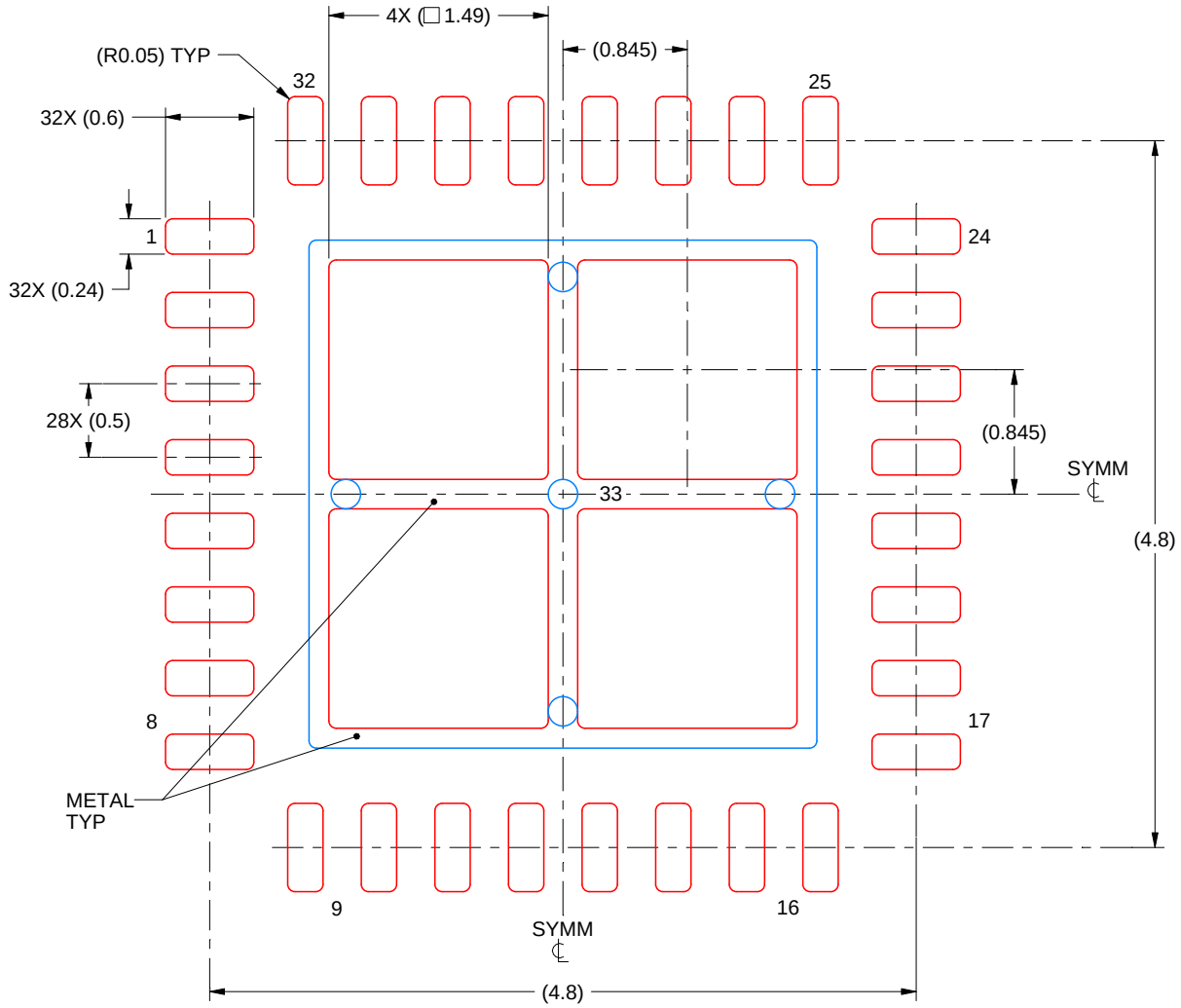

SOLDER PASTE EXAMPLE
BASED ON 0.125 mm THICK STENCIL

EXPOSED PAD 33:
75% PRINTED SOLDER COVERAGE BY AREA UNDER PACKAGE
SCALE:20X

4225196/A 08/2019

NOTES: (continued)

6. Laser cutting apertures with trapezoidal walls and rounded corners may offer better paste release. IPC-7525 may have alternate design recommendations.

DW (R–PDSO–G28) PLASTIC SMALL OUTLINE

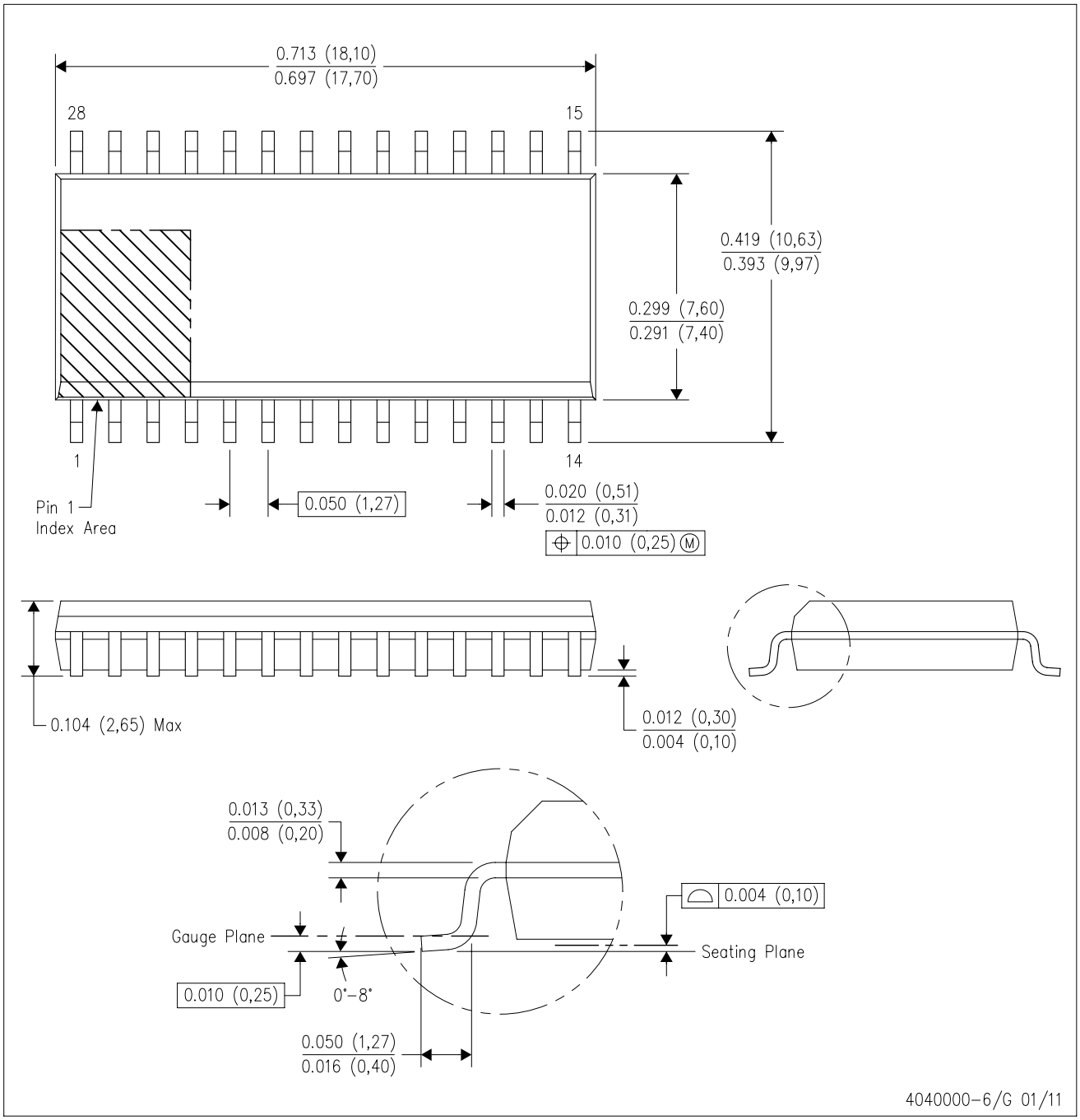

NOTES:
A. All linear dimensions are in inches (millimeters). Dimensioning and tolerancing per ASME Y14.5M–1994.
B. This drawing is subject to change without notice.
C. Body dimensions do not include mold flash or protrusion not to exceed 0.006 (0,15).
D. Falls within JEDEC MS–013 variation AE.

DW (R–PDSO–G28) PLASTIC SMALL OUTLINE

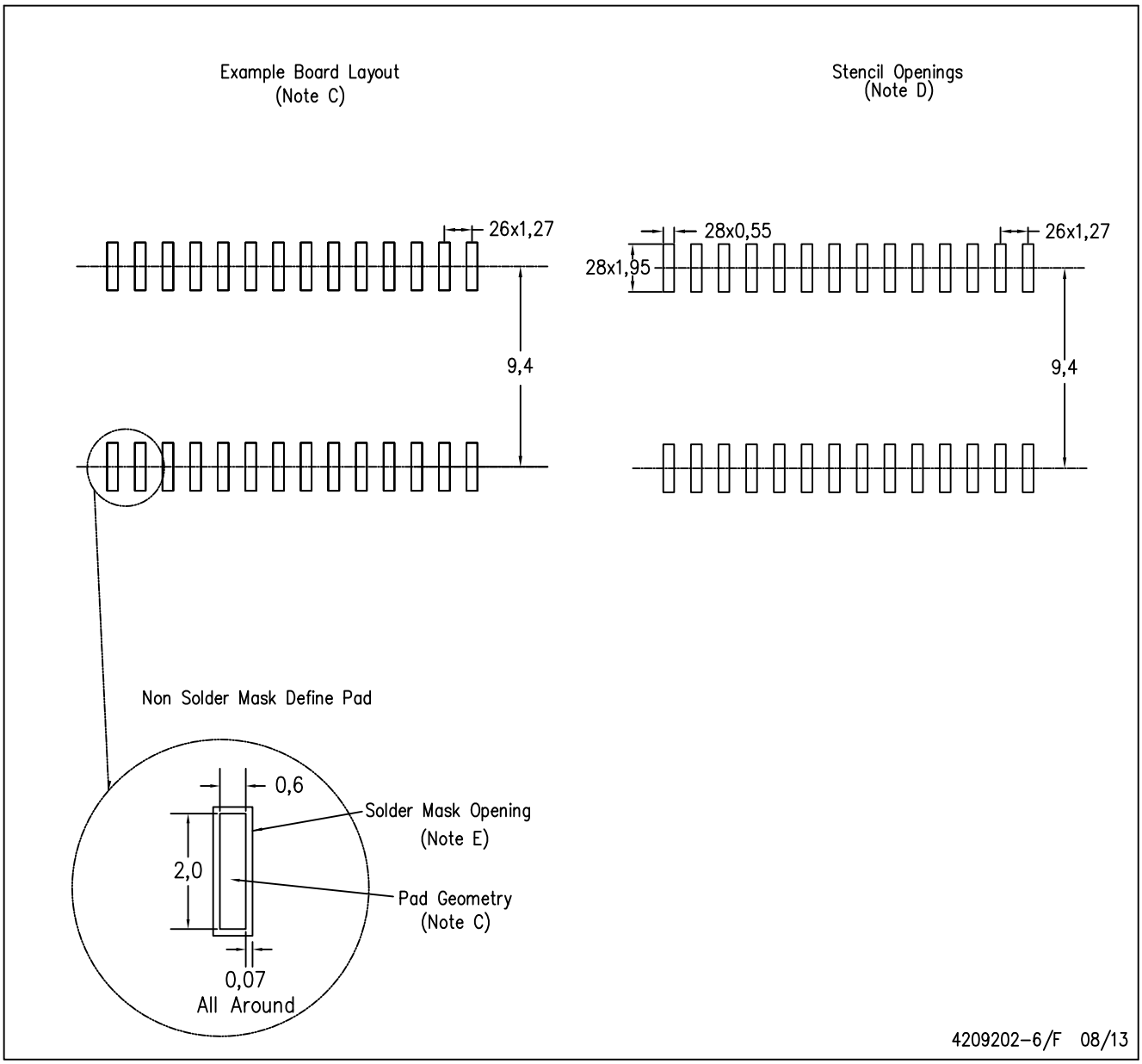

NOTES:
A. All linear dimensions are in millimeters.
B. This drawing is subject to change without notice.
C. Refer to IPC7351 for alternate board design.
D. Laser cutting apertures with trapezoidal walls and also rounding corners will offer better paste release. Customers should contact their board assembly site for stencil design recommendations. Refer to IPC–7525
E. Customers should contact their board fabrication site for solder mask tolerances between and around signal pads.

PW (R-PDSO-G28) PLASTIC SMALL OUTLINE

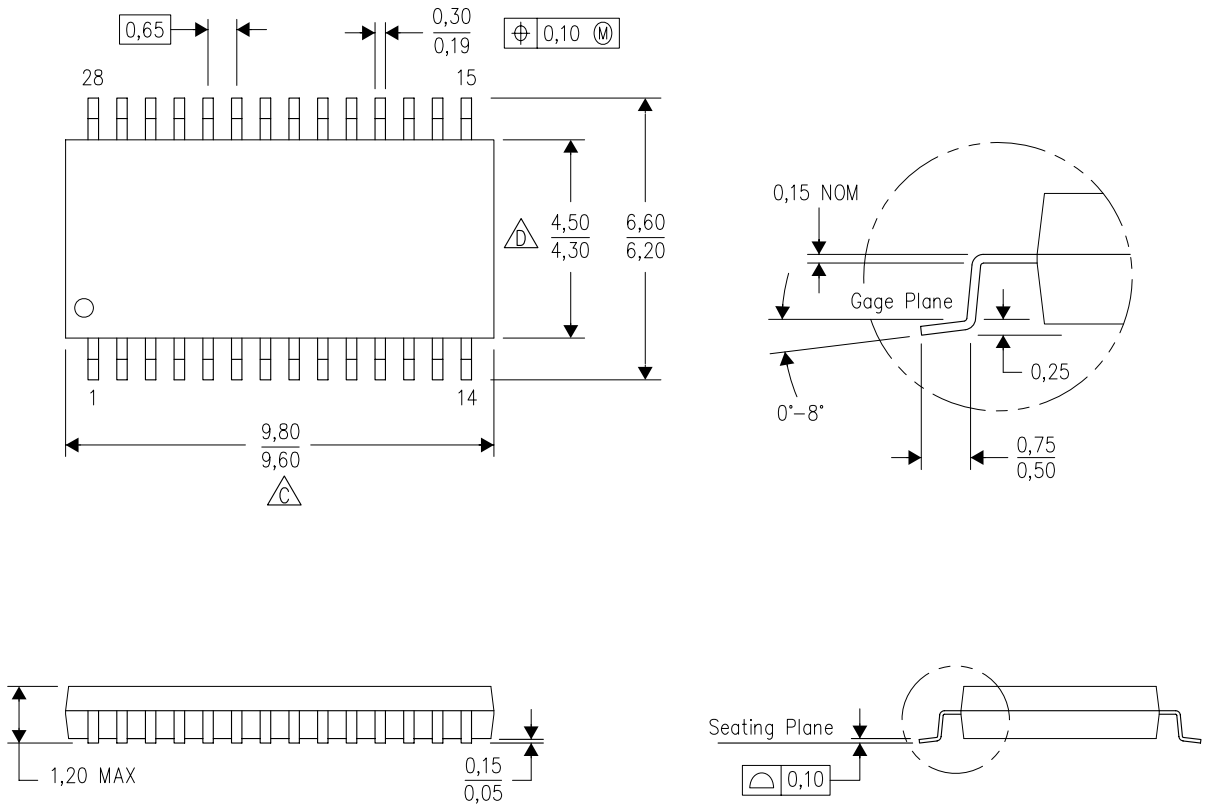

NOTES:
A. All linear dimensions are in millimeters. Dimensioning and tolerancing per ASME Y14.5M–1994.
B. This drawing is subject to change without notice.
C. Body length does not include mold flash, protrusions, or gate burrs. Mold flash, protrusions, or gate burrs shall not exceed 0,15 each side.
D. Body width does not include interlead flash. Interlead flash shall not exceed 0,25 each side.
E. Falls within JEDEC MO-153

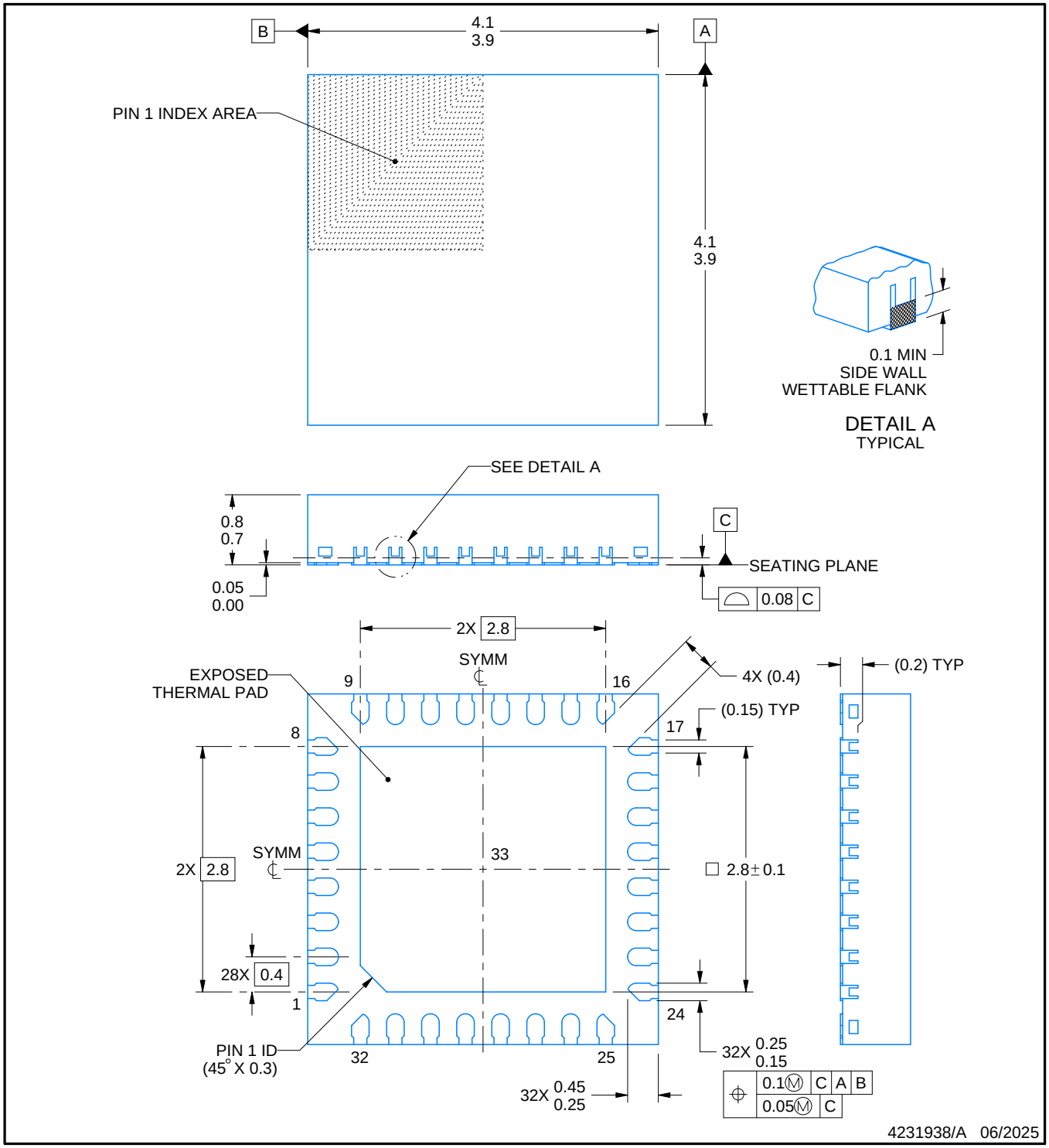

NOTES:

1. All linear dimensions are in millimeters. Any dimensions in parenthesis are for reference only. Dimensioning and tolerancing per ASME Y14.5M.
2. This drawing is subject to change without notice.
3. The package thermal pad must be soldered to the printed circuit board for thermal and mechanical performance.

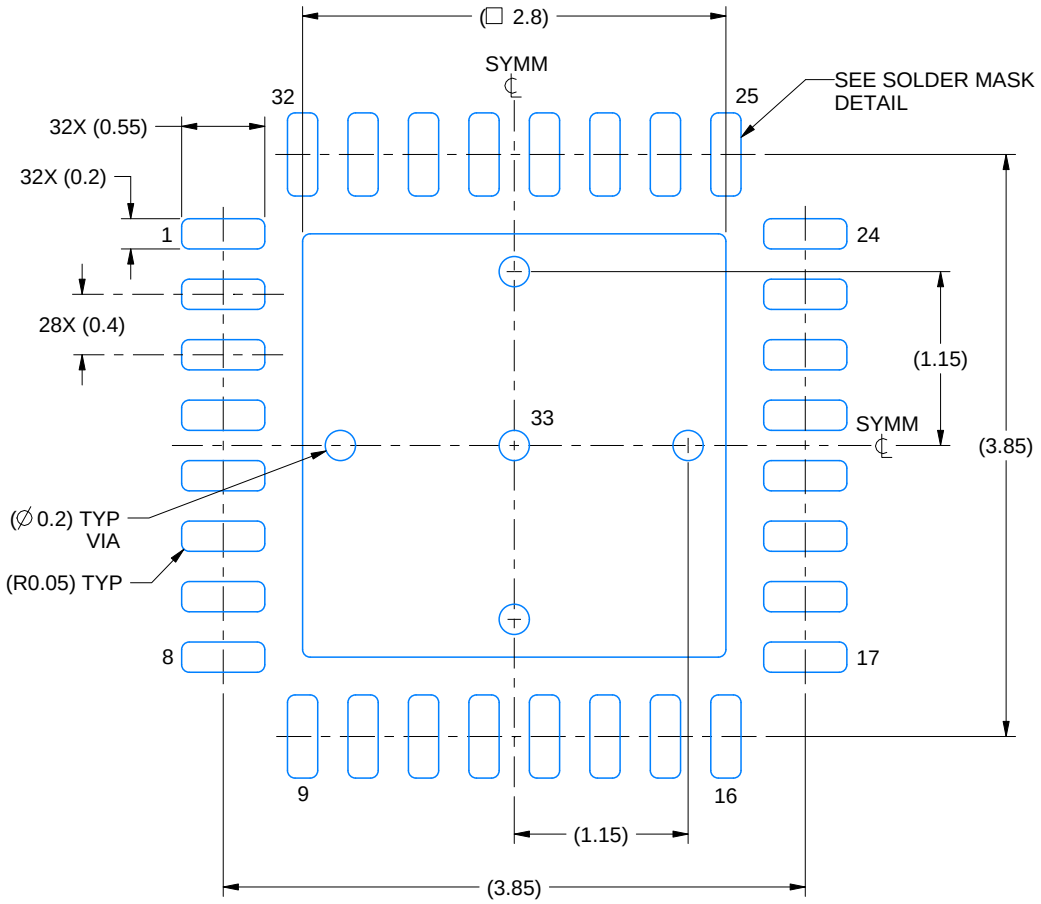

LAND PATTERN EXAMPLE
EXPOSED METAL SHOWN
SCALE: 20X

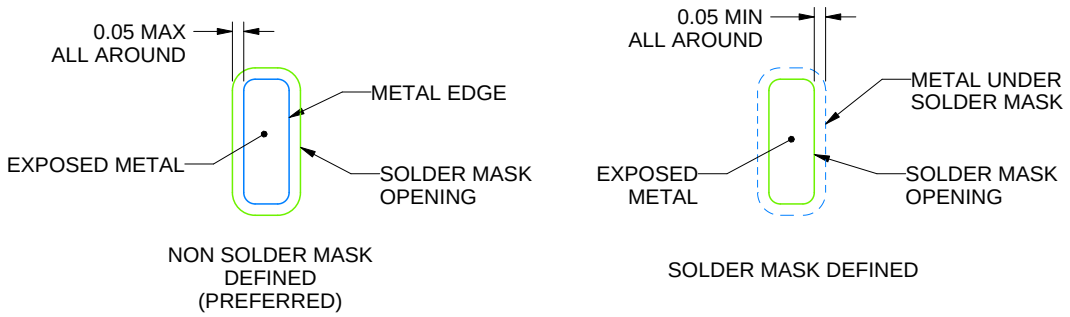

SOLDER MASK DETAILS

4231938/A 06/2025

NOTES: (continued)

4. This package is designed to be soldered to a thermal pad on the board. For more information, see Texas Instruments literature number SLUA271 (www.ti.com/lit/slua271).
5. Vias are optional depending on application, refer to device data sheet. If any vias are implemented, refer to their locations shown on this view. It is recommended that vias under paste be filled, plugged or tented.

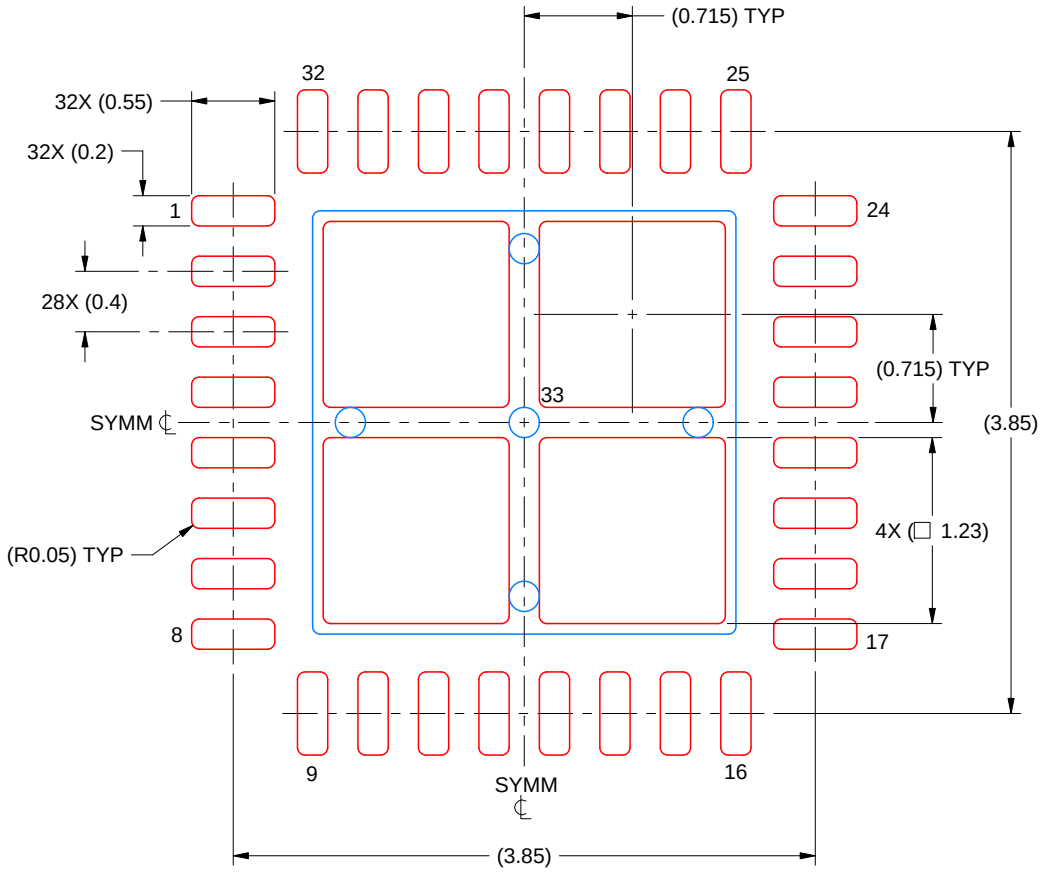

SOLDER PASTE EXAMPLE
BASED ON 0.1 MM THICK STENCIL
SCALE: 20X

EXPOSED PAD 33
77% PRINTED SOLDER COVERAGE BY AREA UNDER PACKAGE

4231938/A 06/2025

NOTES: (continued)

6. Laser cutting apertures with trapezoidal walls and rounded corners may offer better paste release. IPC-7525 may have alternate design recommendations.

RSN (S–PWQFN–N32) PLASTIC QUAD FLATPACK NO–LEAD

THERMAL INFORMATION

This package incorporates an exposed thermal pad that is designed to be attached directly to an external heatsink. The thermal pad must be soldered directly to the printed circuit board (PCB). After soldering, the PCB can be used as a heatsink. In addition, through the use of thermal vias, the thermal pad can be attached directly to the appropriate copper plane shown in the electrical schematic for the device, or alternatively, can be attached to a special heatsink structure designed into the PCB. This design optimizes the heat transfer from the integrated circuit (IC).

For information on the Quad Flatpack No–Lead (QFN) package and its advantages, refer to Application Report, QFN/SON PCB Attachment, Texas Instruments Literature No. SLUA271. This document is available at www.ti.com.

The exposed thermal pad dimensions for this package are shown in the following illustration.

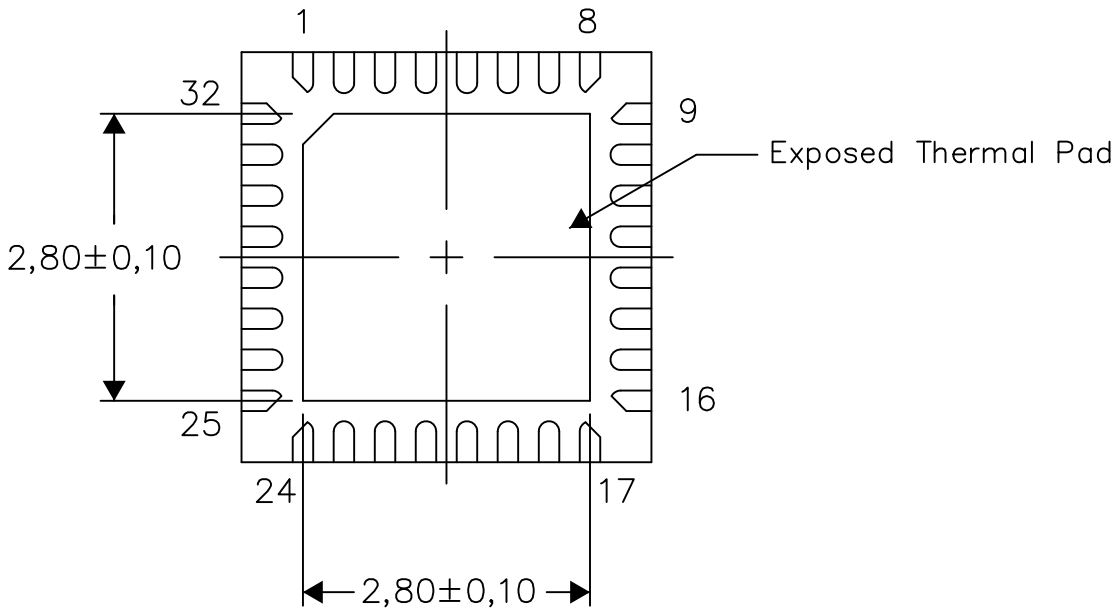

Bottom View

Exposed Thermal Pad Dimensions

4209775–2/F 03/14

NOTE: All linear dimensions are in millimeters

RSN (S–PWQFN–N32) PLASTIC QUAD FLATPACK NO–LEAD

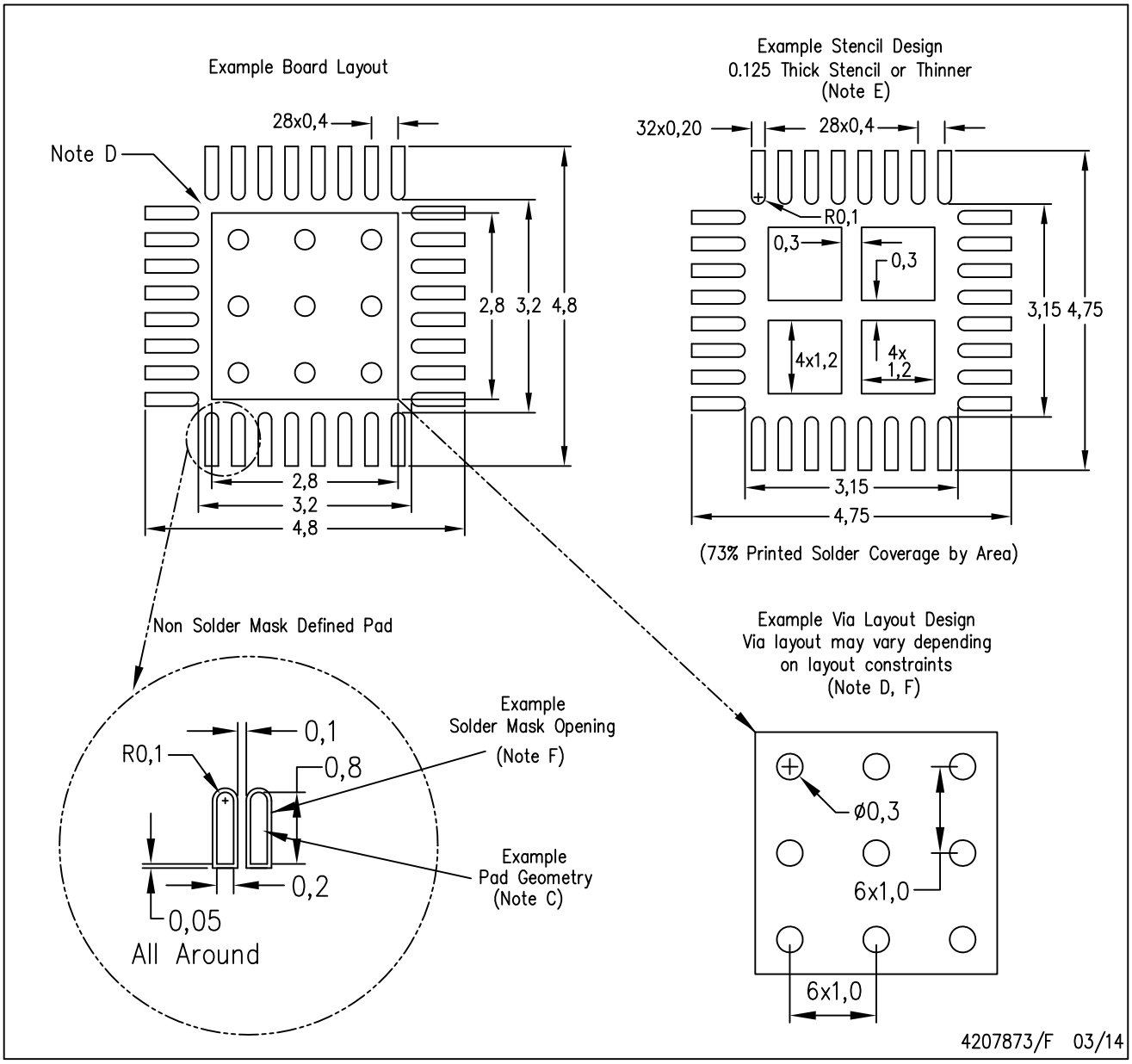

NOTES:
- A. All linear dimensions are in millimeters.
- B. This drawing is subject to change without notice.
- C. Publication IPC–7351 is recommended for alternate designs.
- D. This package is designed to be soldered to a thermal pad on the board. Refer to Application Note, Quad Flat–Pack Packages, Texas Instruments Literature No. SLUA271, and also the Product Data Sheets for specific thermal information, via requirements, and recommended board layout. These documents are available at www.ti.com <http://www.ti.com>.
- E. Laser cutting apertures with trapezoidal walls and also rounding corners will offer better paste release. Customers should contact their board assembly site for stencil design recommendations. Refer to IPC 7525 for stencil design considerations.
- F. Customers should contact their board fabrication site for recommended solder mask tolerances and via tenting recommendations for vias placed in the thermal pad.

IMPORTANT NOTICE AND DISCLAIMER

TI PROVIDES TECHNICAL AND RELIABILITY DATA (INCLUDING DATA SHEETS), DESIGN RESOURCES (INCLUDING REFERENCE DESIGNS), APPLICATION OR OTHER DESIGN ADVICE, WEB TOOLS, SAFETY INFORMATION, AND OTHER RESOURCES “AS IS” AND WITH ALL FAULTS, AND DISCLAIMS ALL WARRANTIES, EXPRESS AND IMPLIED, INCLUDING WITHOUT LIMITATION ANY IMPLIED WARRANTIES OF MERCHANTABILITY, FITNESS FOR A PARTICULAR PURPOSE OR NON-INFRINGEMENT OF THIRD PARTY INTELLECTUAL PROPERTY RIGHTS.

These resources are intended for skilled developers designing with TI products. You are solely responsible for (1) selecting the appropriate TI products for your application, (2) designing, validating and testing your application, and (3) ensuring your application meets applicable standards, and any other safety, security, regulatory or other requirements.

These resources are subject to change without notice. TI grants you permission to use these resources only for development of an application that uses the TI products described in the resource. Other reproduction and display of these resources is prohibited. No license is granted to any other TI intellectual property right or to any third party intellectual property right. TI disclaims responsibility for, and you will fully indemnify TI and its representatives against, any claims, damages, costs, losses, and liabilities arising out of your use of these resources.

TI’s products are provided subject to TI’s Terms of Sale or other applicable terms available either on ti.com or provided in conjunction with such TI products. TI’s provision of these resources does not expand or otherwise alter TI’s applicable warranties or warranty disclaimers for TI products.

TI objects to and rejects any additional or different terms you may have proposed.

Mailing Address: Texas Instruments, Post Office Box 655303, Dallas, Texas 75265
Copyright © 2025, Texas Instruments Incorporated