PGA305 Signal Conditioner and Transmitter for Pressure Sensors

1 Features

- Analog features:
  - Analog front-end for resistive bridge sensors
  - Accommodates sensor sensitivities from 1mV/V to 135mV/V
  - On-chip temperature sensor
  - Programmable gain
  - 24-bit sigma-delta analog-to-digital converter for signal channel
  - 24-bit sigma-delta analog-to-digital converter for temperature channel
  - 14-bit output DAC
- Digital features:
  - FSO accuracy across temperature: < 0.1%
  - System response time: < 220µs
  - Third-order offset, gain, and nonlinearity temperature compensation
  - Diagnostic functions
  - Integrated EEPROM for device operation, calibration data and user data
- Peripheral features:
  - I^2C interface for data reading and device configuration
  - One-wire interface enables communication through the power supply pin without using additional lines
  - Current loop interface: 4mA to 20mA
  - Ratiometric and absolute voltage output
  - Power management control
  - Analog low-voltage detect
- General features:
  - Industrial temperature range: –40°C to 150°C
  - Power supply:
    - On-chip power management accepts wide power-supply voltage from 3.3V to 30V
    - Integrated reverse-protection circuit

2 Applications

- Pressure-sensor transmitters and transducers
- Liquid-level meter, flow meters
- Resistive field transmitters

3 Description

The PGA305 device supplies an interface for piezoresistive and strain-gauge pressure-sense elements. The device is a full system-on-chip (SoC) solution that includes programmable analog front end (AFE), ADC, and digital signal processing that enable direct connection to the sense element. The PGA305 device also includes integrated voltage regulators and an oscillator to minimize the number of external components. The PGA305 device can employ third-order temperature and nonlinearity compensation to achieve high accuracy. The device can also use the integrated I^2C interface or the one-wire serial interface (OWI) to achieve external communication and simplify the system calibration process. An Integrated DAC supports absolute-voltage, ratiometric-voltage, and 4mA to 20mA current-loop outputs.

Package Information

PART NUMBER	PACKAGE(1)	PACKAGE SIZE(2)
PGA305	RHH (VQFN, 36)	6mm × 6mm

(1) For more information, see the *Mechanical, Packaging, and Orderable Information* .
(2) The package size (length × width) is a nominal value and includes pins, where applicable.

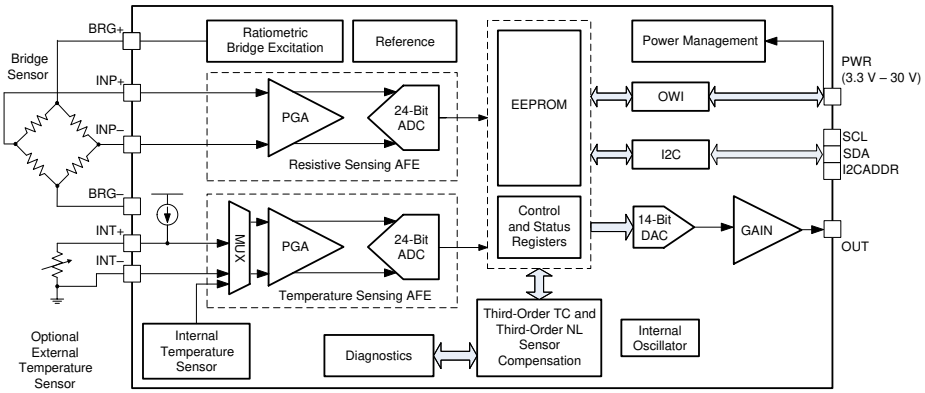

PGA305 Simplified Block Diagram

An IMPORTANT NOTICE at the end of this data sheet addresses availability, warranty, changes, use in safety-critical applications, intellectual property matters and other important disclaimers. PRODUCTION DATA.

4 Device and Documentation Support

4.1 Receiving Notification of Documentation Updates

To receive notification of documentation updates, navigate to the device product folder on ti.com. Click on *Notifications* to register and receive a weekly digest of any product information that has changed. For change details, review the revision history included in any revised document.

4.2 Support Resources

TI E2E™ support forums are an engineer's go-to source for fast, verified answers and design help — straight from the experts. Search existing answers or ask your own question to get the quick design help you need.

Linked content is provided "AS IS" by the respective contributors. They do not constitute TI specifications and do not necessarily reflect TI's views; see TI's Terms of Use.

4.3 Trademarks

TI E2E™ is a trademark of Texas Instruments.
All trademarks are the property of their respective owners.

4.4 Electrostatic Discharge Caution

This integrated circuit can be damaged by ESD. Texas Instruments recommends that all integrated circuits be handled with appropriate precautions. Failure to observe proper handling and installation procedures can cause damage.

ESD damage can range from subtle performance degradation to complete device failure. Precision integrated circuits may be more susceptible to damage because very small parametric changes could cause the device not to meet its published specifications.

4.5 Glossary

TI Glossary	This glossary lists and explains terms, acronyms, and definitions.

5 Mechanical, Packaging, and Orderable Information

The following pages include mechanical, packaging, and orderable information. This information is the most current data available for the designated devices. This data is subject to change without notice and revision of this document. For browser-based versions of this data sheet, refer to the left-hand navigation.

Copyright © 2024 Texas Instruments Incorporated

5.1 Mechanical Data

RHH0036C

PACKAGE OUTLINE

VQFN - 1 mm max height

PLASTIC QUAD FLATPACK - NO LEAD

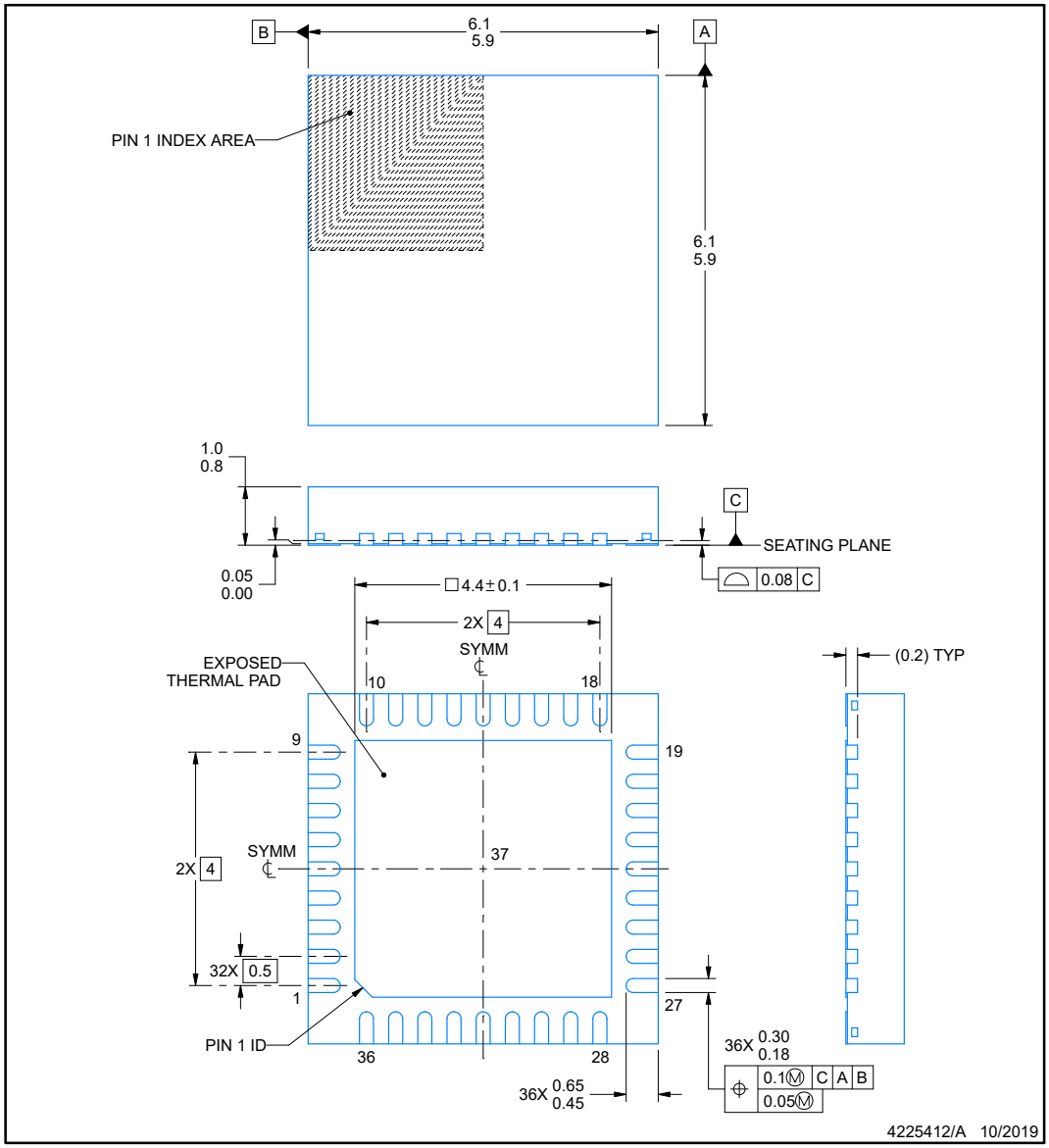

NOTES:

1. All linear dimensions are in millimeters. Any dimensions in parenthesis are for reference only. Dimensioning and tolerancing per ASME Y14.5M.
2. This drawing is subject to change without notice.
3. The package thermal pad must be soldered to the printed circuit board for thermal and mechanical performance.

Copyright © 2024 Texas Instruments Incorporated

EXAMPLE BOARD LAYOUT

RHH0036C **VQFN - 1 mm max height**

PLASTIC QUAD FLATPACK - NO LEAD

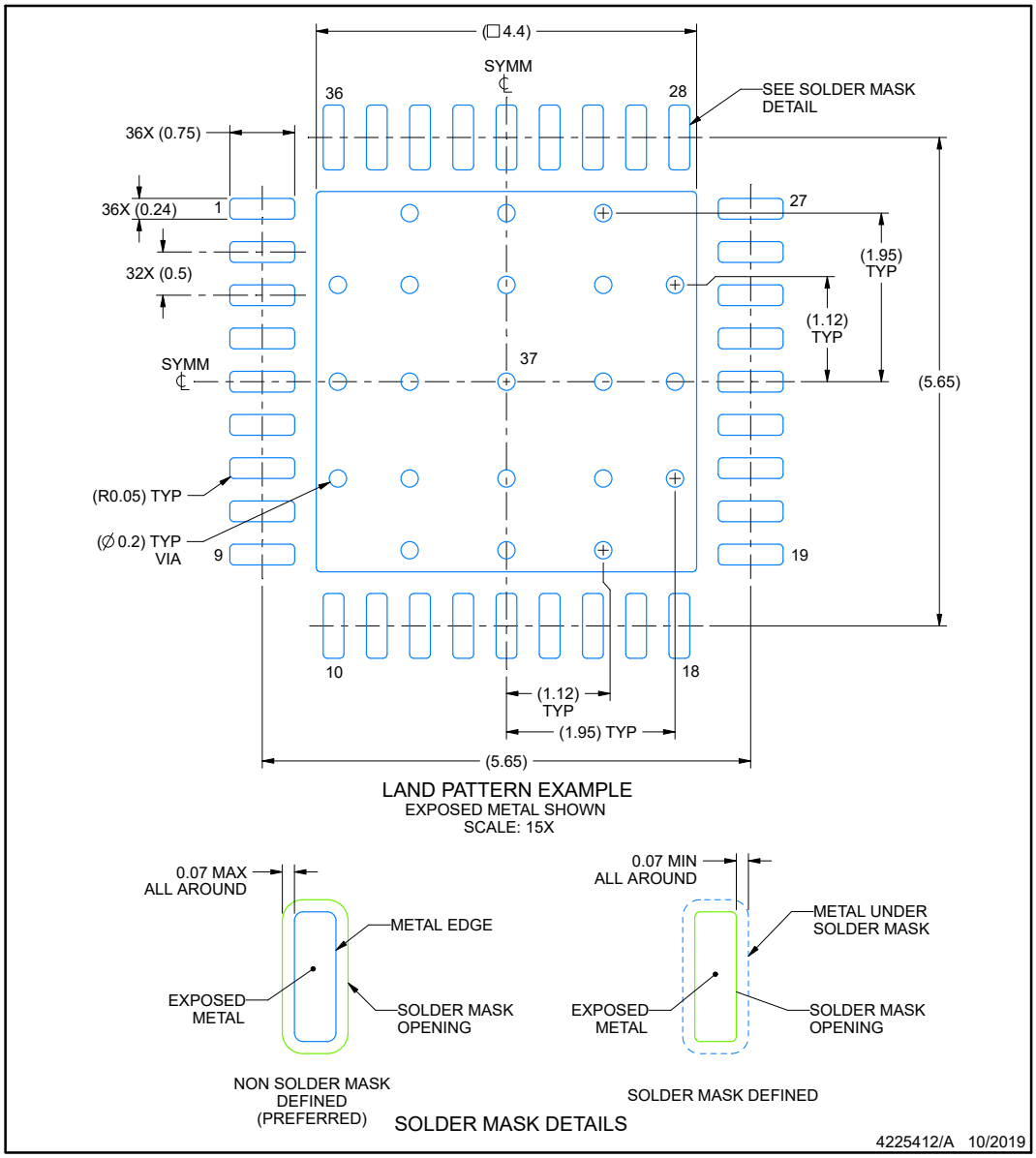

NOTES: (continued)

4. This package is designed to be soldered to a thermal pad on the board. For more information, see Texas Instruments literature number SLUA271 (www.ti.com/lit/slua271).
5. Vias are optional depending on application, refer to device data sheet. If any vias are implemented, refer to their locations shown on this view. It is recommended that vias under paste be filled, plugged or tented.

Copyright © 2024 Texas Instruments Incorporated

EXAMPLE STENCIL DESIGN

RHH0036C **VQFN - 1 mm max height**

PLASTIC QUAD FLATPACK - NO LEAD

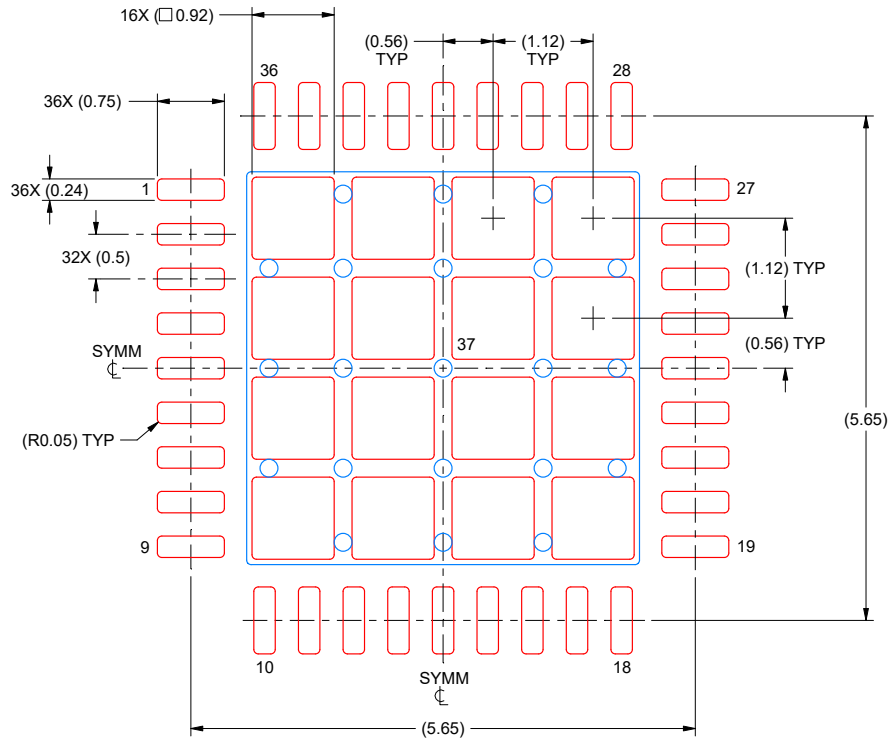

SOLDER PASTE EXAMPLE
BASED ON 0.125 MM THICK STENCIL
SCALE: 15X

EXPOSED PAD 37
70% PRINTED SOLDER COVERAGE BY AREA UNDER PACKAGE

4225412/A 10/2019

NOTES: (continued)

6. Laser cutting apertures with trapezoidal walls and rounded corners may offer better paste release. IPC-7525 may have alternate design recommendations.

Copyright © 2024 Texas Instruments Incorporated

PACKAGING INFORMATION

Orderable part number	Status (1)	Material type (2)	Package | Pins	Package qty | Carrier	RoHS (3)	Lead finish/ Ball material (4)	MSL rating/ Peak reflow (5)	Op temp (°C)	Part marking (6)
PGA305ARHHR	Active	Production	VQFN (RHH) | 36	2500 | LARGE T&R	Yes	NIPDAU	Level-1-260C-UNLIM	-40 to 150	PGA305A RHH
PGA305ARHHR.A	Active	Production	VQFN (RHH) | 36	2500 | LARGE T&R	Yes	NIPDAU	Level-1-260C-UNLIM	-40 to 150	PGA305A RHH
PGA305ARHHRG4	Active	Production	VQFN (RHH) | 36	2500 | LARGE T&R	Yes	NIPDAU	Level-1-260C-UNLIM	-40 to 150	PGA305A RHH
PGA305ARHHRG4.A	Active	Production	VQFN (RHH) | 36	2500 | LARGE T&R	Yes	NIPDAU	Level-1-260C-UNLIM	-40 to 150	PGA305A RHH
PGA305ARHHT	Active	Production	VQFN (RHH) | 36	250 | SMALL T&R	Yes	NIPDAU	Level-1-260C-UNLIM	-40 to 150	PGA305A RHH
PGA305ARHHT.A	Active	Production	VQFN (RHH) | 36	250 | SMALL T&R	Yes	NIPDAU	Level-1-260C-UNLIM	-40 to 150	PGA305A RHH

(1) **Status:** For more details on status, see our product life cycle.

(2) **Material type:** When designated, preproduction parts are prototypes/experimental devices, and are not yet approved or released for full production. Testing and final process, including without limitation quality assurance, reliability performance testing, and/or process qualification, may not yet be complete, and this item is subject to further changes or possible discontinuation. If available for ordering, purchases will be subject to an additional waiver at checkout, and are intended for early internal evaluation purposes only. These items are sold without warranties of any kind.

(3) **RoHS values:** Yes, No, RoHS Exempt. See the TI RoHS Statement for additional information and value definition.

(4) **Lead finish/Ball material:** Parts may have multiple material finish options. Finish options are separated by a vertical ruled line. Lead finish/Ball material values may wrap to two lines if the finish value exceeds the maximum column width.

(5) **MSL rating/Peak reflow:** The moisture sensitivity level ratings and peak solder (reflow) temperatures. In the event that a part has multiple moisture sensitivity ratings, only the lowest level per JEDEC standards is shown. Refer to the shipping label for the actual reflow temperature that will be used to mount the part to the printed circuit board.

(6) **Part marking:** There may be an additional marking, which relates to the logo, the lot trace code information, or the environmental category of the part.

Multiple part markings will be inside parentheses. Only one part marking contained in parentheses and separated by a "~" will appear on a part. If a line is indented then it is a continuation of the previous line and the two combined represent the entire part marking for that device.

Important Information and Disclaimer: The information provided on this page represents TI's knowledge and belief as of the date that it is provided. TI bases its knowledge and belief on information provided by third parties, and makes no representation or warranty as to the accuracy of such information. Efforts are underway to better integrate information from third parties. TI has taken and continues to take reasonable steps to provide representative and accurate information but may not have conducted destructive testing or chemical analysis on incoming materials and chemicals. TI and TI suppliers consider certain information to be proprietary, and thus CAS numbers and other limited information may not be available for release.

In no event shall TI's liability arising out of such information exceed the total purchase price of the TI part(s) at issue in this document sold by TI to Customer on an annual basis.

TAPE AND REEL INFORMATION

REEL DIMENSIONS

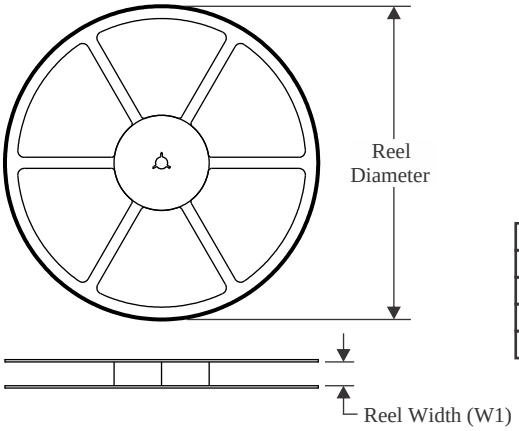

TAPE DIMENSIONS

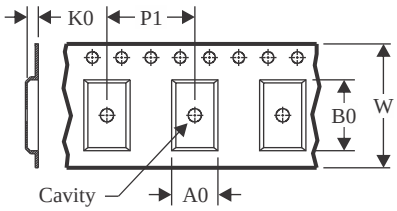

A0	Dimension designed to accommodate the component width
B0	Dimension designed to accommodate the component length
K0	Dimension designed to accommodate the component thickness
W	Overall width of the carrier tape
P1	Pitch between successive cavity centers

QUADRANT ASSIGNMENTS FOR PIN 1 ORIENTATION IN TAPE

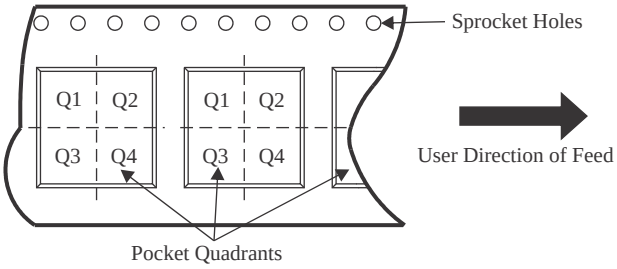

*All dimensions are nominal

Device	Package Type	Package Drawing	Pins	SPQ	Reel Diameter (mm)	Reel Width W1 (mm)	A0 (mm)	B0 (mm)	K0 (mm)	P1 (mm)	W (mm)	Pin1 Quadrant
PGA305ARHHR	VQFN	RHH	36	2500	330.0	16.4	6.3	6.3	1.1	12.0	16.0	Q2
PGA305ARHHRG4	VQFN	RHH	36	2500	330.0	16.4	6.3	6.3	1.1	12.0	16.0	Q2
PGA305ARHHT	VQFN	RHH	36	250	180.0	16.4	6.3	6.3	1.1	12.0	16.0	Q2

TAPE AND REEL BOX DIMENSIONS

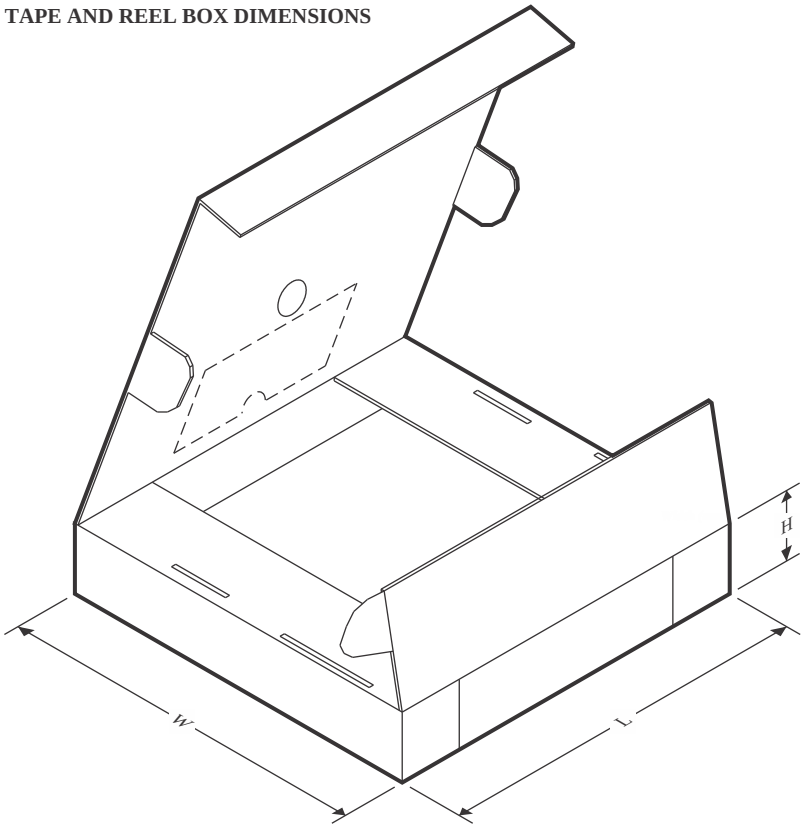

*All dimensions are nominal

Device	Package Type	Package Drawing	Pins	SPQ	Length (mm)	Width (mm)	Height (mm)
PGA305ARHHR	VQFN	RHH	36	2500	367.0	367.0	38.0
PGA305ARHHRG4	VQFN	RHH	36	2500	367.0	367.0	38.0
PGA305ARHHT	VQFN	RHH	36	250	210.0	185.0	35.0

GENERIC PACKAGE VIEW

RHH 36

VQFN - 1 mm max height

6 x 6, 0.5 mm pitch

PLASTIC QUAD FLATPACK - NO LEAD

This image is a representation of the package family, actual package may vary.
Refer to the product data sheet for package details.

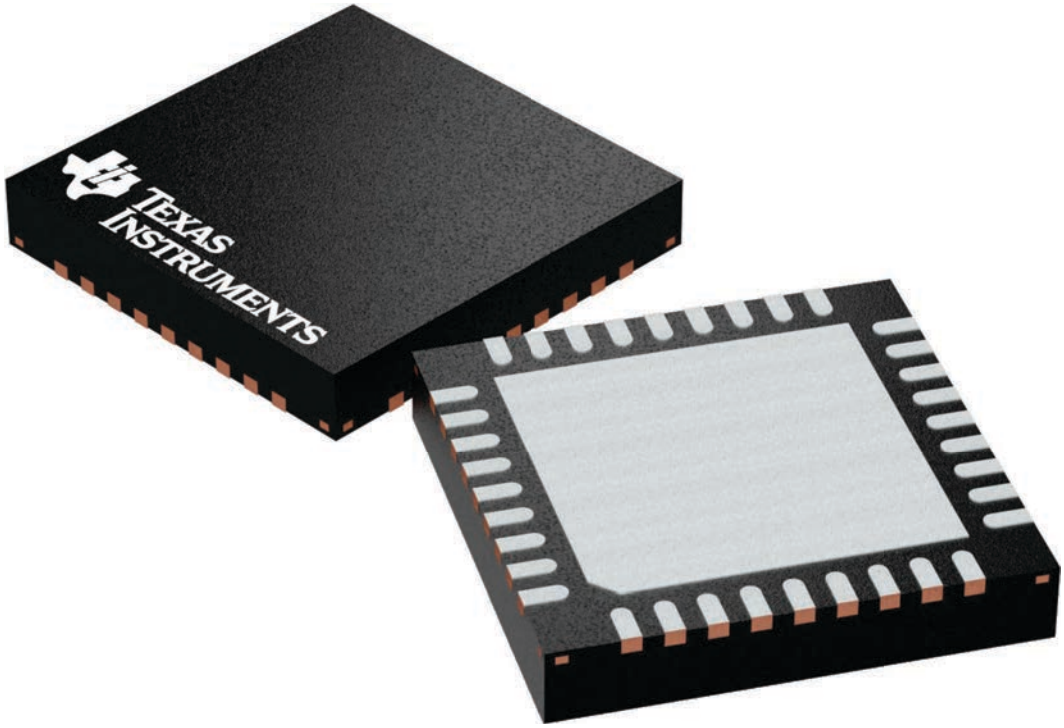

4225440/A

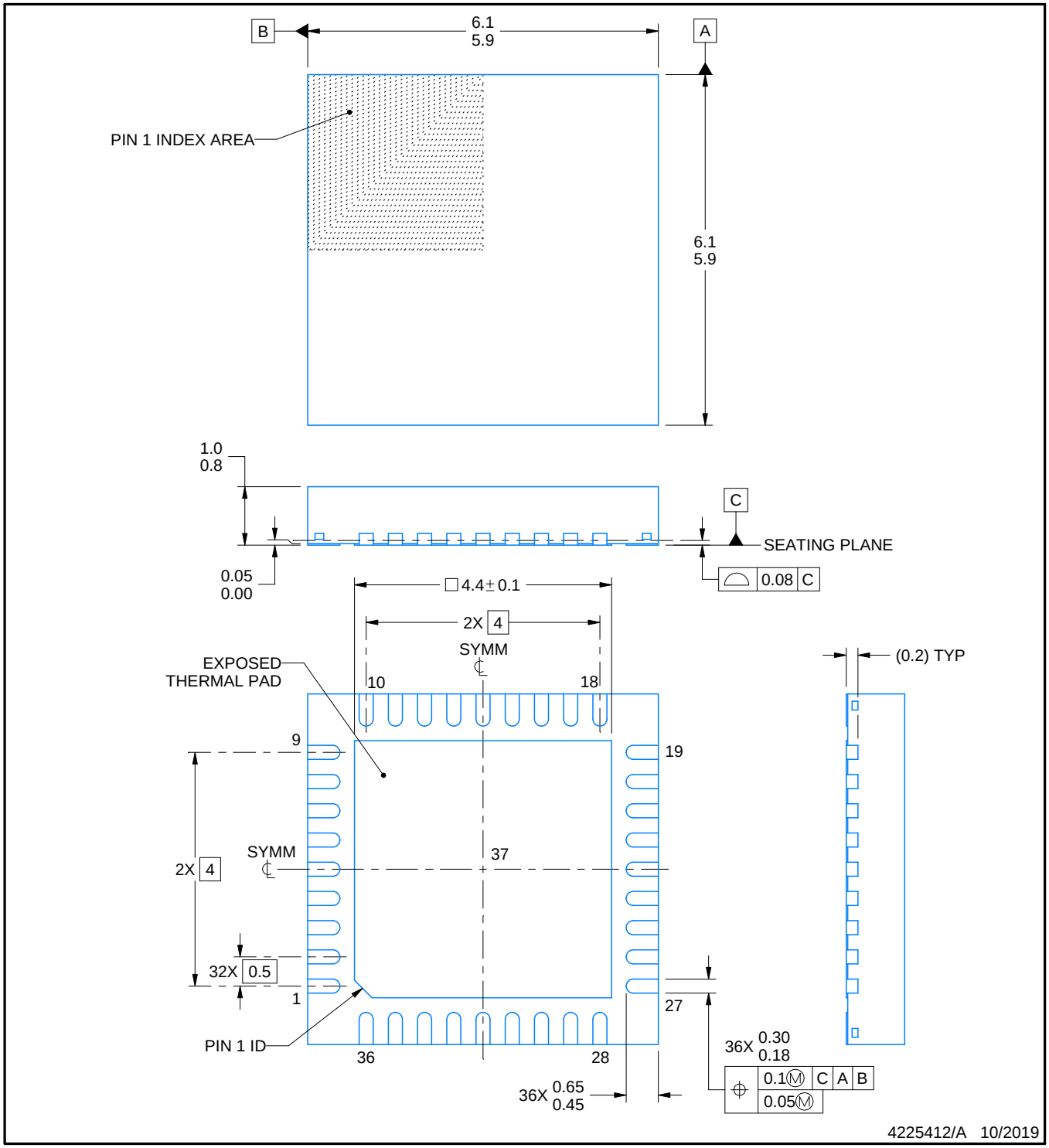

NOTES:

1. All linear dimensions are in millimeters. Any dimensions in parenthesis are for reference only. Dimensioning and tolerancing per ASME Y14.5M.
2. This drawing is subject to change without notice.
3. The package thermal pad must be soldered to the printed circuit board for thermal and mechanical performance.

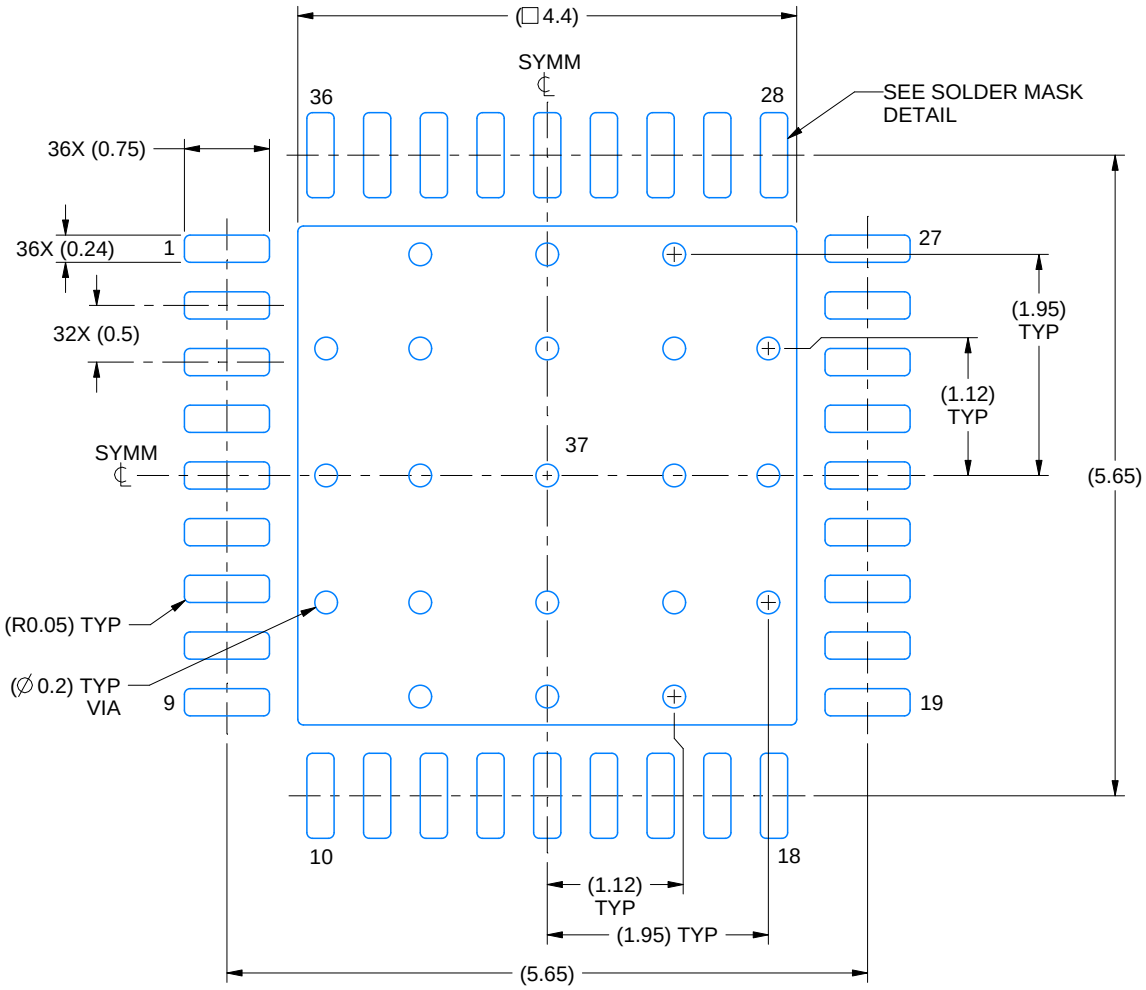

LAND PATTERN EXAMPLE
EXPOSED METAL SHOWN
SCALE: 15X

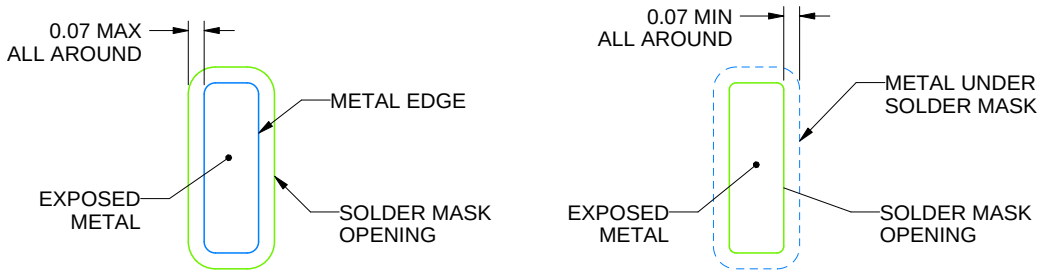

NON SOLDER MASK DEFINED (PREFERRED)

SOLDER MASK DEFINED

SOLDER MASK DETAILS

4225412/A 10/2019

NOTES: (continued)

4. This package is designed to be soldered to a thermal pad on the board. For more information, see Texas Instruments literature number SLUA271 (www.ti.com/lit/slua271).
5. Vias are optional depending on application, refer to device data sheet. If any vias are implemented, refer to their locations shown on this view. It is recommended that vias under paste be filled, plugged or tented.

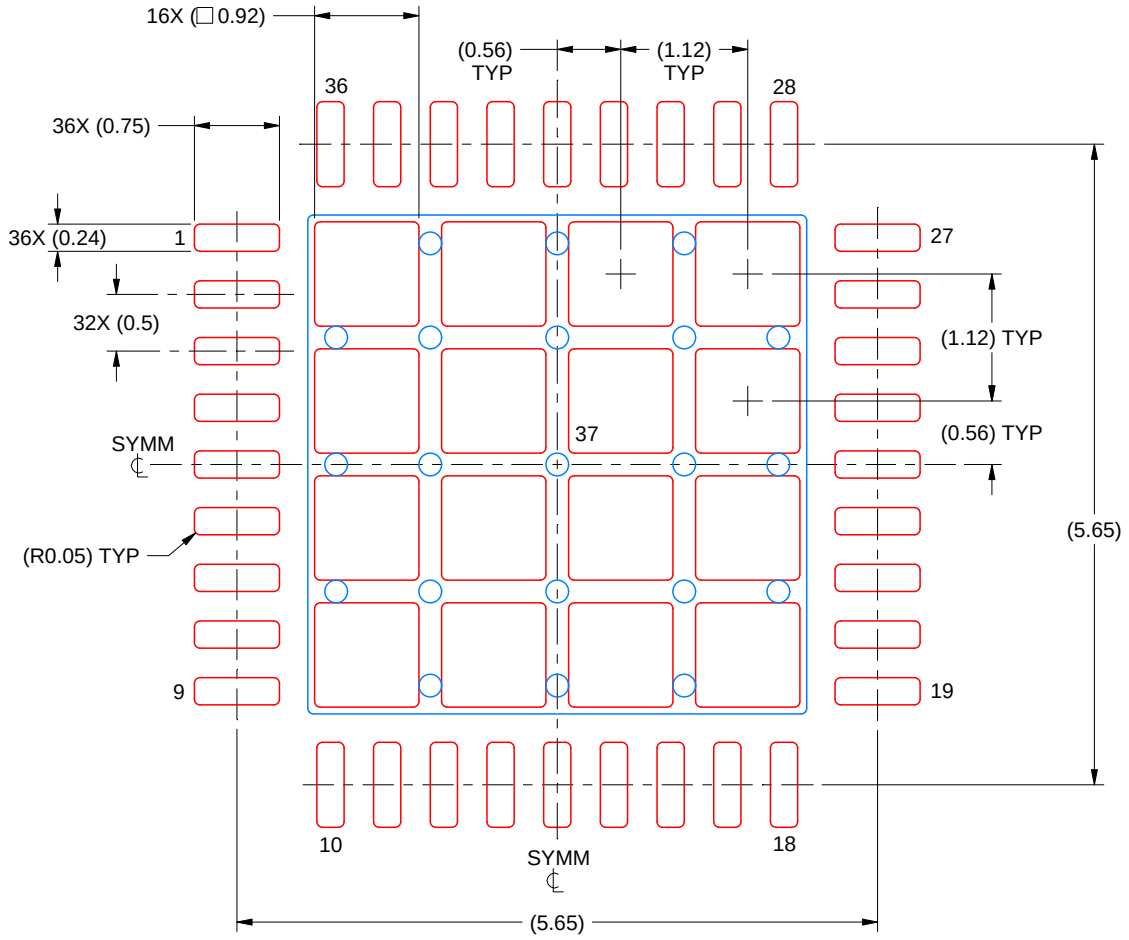

SOLDER PASTE EXAMPLE
BASED ON 0.125 MM THICK STENCIL
SCALE: 15X

EXPOSED PAD 37
70% PRINTED SOLDER COVERAGE BY AREA UNDER PACKAGE

4225412/A 10/2019

NOTES: (continued)

6. Laser cutting apertures with trapezoidal walls and rounded corners may offer better paste release. IPC-7525 may have alternate design recommendations.

IMPORTANT NOTICE AND DISCLAIMER

TI PROVIDES TECHNICAL AND RELIABILITY DATA (INCLUDING DATA SHEETS), DESIGN RESOURCES (INCLUDING REFERENCE DESIGNS), APPLICATION OR OTHER DESIGN ADVICE, WEB TOOLS, SAFETY INFORMATION, AND OTHER RESOURCES “AS IS” AND WITH ALL FAULTS, AND DISCLAIMS ALL WARRANTIES, EXPRESS AND IMPLIED, INCLUDING WITHOUT LIMITATION ANY IMPLIED WARRANTIES OF MERCHANTABILITY, FITNESS FOR A PARTICULAR PURPOSE OR NON-INFRINGEMENT OF THIRD PARTY INTELLECTUAL PROPERTY RIGHTS.

These resources are intended for skilled developers designing with TI products. You are solely responsible for (1) selecting the appropriate TI products for your application, (2) designing, validating and testing your application, and (3) ensuring your application meets applicable standards, and any other safety, security, regulatory or other requirements.

These resources are subject to change without notice. TI grants you permission to use these resources only for development of an application that uses the TI products described in the resource. Other reproduction and display of these resources is prohibited. No license is granted to any other TI intellectual property right or to any third party intellectual property right. TI disclaims responsibility for, and you will fully indemnify TI and its representatives against, any claims, damages, costs, losses, and liabilities arising out of your use of these resources.

TI’s products are provided subject to TI’s Terms of Sale or other applicable terms available either on ti.com or provided in conjunction with such TI products. TI’s provision of these resources does not expand or otherwise alter TI’s applicable warranties or warranty disclaimers for TI products.

TI objects to and rejects any additional or different terms you may have proposed.

Mailing Address: Texas Instruments, Post Office Box 655303, Dallas, Texas 75265
Copyright © 2025, Texas Instruments Incorporated