ISO7741E-Q1 Grade 0, High-Speed, Robust-EMC Reinforced Quad-Channel Digital Isolator

1 Features

- Qualified for automotive applications
- AEC-Q100 qualified with the following results:
  - Device temperature Grade 0: –40°C to 150°C ambient operating temperature
- Functional Safety-Capable
  - Documentation available to aid functional safety system design
- 100Mbps data rate
- Robust isolation barrier:
  - >30-year projected lifetime at $1500V_{RMS}$ working voltage
  - Up to $5000V_{RMS}$ isolation rating
  - Up to 12.8kV surge capability
  - ±100kV/µs typical CMTI
- Wide supply range: 2.25V to 5.5V
- 2.25V to 5.5V level translation
- Default output *high* (ISO7741) and *low* (ISO7741F) options
- Low power consumption, typical 1.5mA per channel at 1Mbps
- Low propagation delay: 10.7ns typical (5V Supplies)
- Robust electromagnetic compatibility (EMC)
  - System-level ESD, EFT, and surge immunity
  - ±8kV IEC 61000-4-2 contact discharge protection across isolation barrier
  - Low emissions
- Wide-SOIC (DW-16) package
- Safety-related certifications:
  - DIN EN IEC 60747-17 (VDE 0884-17)
  - UL 1577 component recognition program
  - IEC 61010-1, IEC 62368-1, IEC 60601-1, and GB 4943.1 certifications

2 Applications

- Hybrid, electric and powertrain system (EV/HEV)
  - Battery management system (BMS)
  - On-board charger
  - Traction inverter
  - DC/DC converter
  - Inverter and motor control
- Body electronics
  - Automotive parking heater module
  - HVAC compressor module
  - HVAC control module
  - HVAC sensor
  - Interior heater module

Package Information

PART NUMBER	PACKAGE(1)	PACKAGE SIZE(2)	BODY SIZE (NOM)
ISO7741E-Q1	SOIC (DW)	10.30mm × 10.30mm	10.30mm × 7.50mm

(1) For more information, see Section 13.
(2) The package size (length × width) is a nominal value and includes pins, where applicable.

An IMPORTANT NOTICE at the end of this data sheet addresses availability, warranty, changes, use in safety-critical applications, intellectual property matters and other important disclaimers. PRODUCTION DATA.

3 Description

The ISO7741E-Q1 automotive device is a grade 0, high-performance, quad-channel digital isolator with 5000V_{RMS} isolation ratings per UL 1577. This device has reinforced insulation ratings according to VDE, CSA, TUV and CQC. With a high temperature range of up to 150°C, the device is designed for applications like belt starter generators, water, pumps, cooling fans, soot sensors, and more which can experience ambient temperatures greater than 125°C.

The ISO7741E-Q1 device provides high electromagnetic immunity and low emissions at low power consumption, while isolating CMOS or LVCMOS digital I/Os. Each isolation channel has a logic input and output buffer separated by a double capacitive silicon dioxide (SiO_2) insulation barrier. This device comes with enable pins which can be used to put the respective outputs in high impedance for multi-controller driving applications and to reduce power consumption. The ISO7741E-Q1 device has three forward and one reverse-direction channels. If the input power or signal is lost, default output is *high* for devices without suffix F and *low* for devices with suffix F. See the *Device Functional Modes* section for further details.

Used in conjunction with isolated power supplies, these devices help prevent noise currents on data buses, such as CAN, or other circuits from entering the local ground and interfering with or damaging sensitive circuitry. Through remarkable chip design and layout techniques, electromagnetic compatibility of the ISO7741E-Q1 device is significantly enhanced to ease system-level ESD, EFT, surge, and emissions compliance. The ISO7741E-Q1 device is available in 16-pin SOIC package.

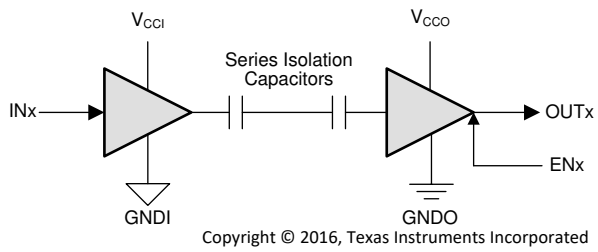

V_{CCI}=Input supply, V_{CCO}=Output supply
GNDI=Input ground, GNDO=Output ground

Simplified Schematic

Copyright © 2024 Texas Instruments Incorporated

Table of Contents

1 Features....1
2 Applications....1
3 Description....2
4 Pin Configuration and Functions....4
4.1 Pin Functions....4
5 Specifications....5
5.1 Absolute Maximum Ratings....5
5.2 ESD Ratings....5
5.3 Recommended Operating Conditions....5
5.4 Thermal Information....6
5.5 Power Rating....6
5.6 Insulation Specifications....7
5.7 Safety-Related Certifications....8
5.8 Safety Limiting Values....8
5.9 Electrical Characteristics—5-V Supply....9
5.10 Supply Current Characteristics—5-V Supply....9
5.11 Electrical Characteristics—3.3-V Supply....10
5.12 Supply Current Characteristics—3.3-V Supply....10
5.13 Electrical Characteristics—2.5-V Supply....11
5.14 Supply Current Characteristics—2.5-V Supply....11
5.15 Switching Characteristics—5-V Supply....12
5.16 Switching Characteristics—3.3-V Supply....12
5.17 Switching Characteristics—2.5-V Supply....13
5.18 Insulation Characteristics Curves....14
5.19 Typical Characteristics....15
6 Parameter Measurement Information....16
7 Detailed Description....18
7.1 Overview....18
7.2 Functional Block Diagram....18
7.3 Feature Description....19
7.4 Device Functional Modes....20
8 Application and Implementation....22
8.1 Application Information....22
8.2 Typical Application....22
9 Power Supply Recommendations....25
10 Layout....26
10.1 Layout Guidelines....26
10.2 Layout Example....26
11 Device and Documentation Support....27
11.1 Documentation Support....27
11.2 Receiving Notification of Documentation Updates....27
11.3 Support Resources....27
11.4 Trademarks....27
11.5 Electrostatic Discharge Caution....27
11.6 Glossary....27
12 Revision History....28
13 Mechanical, Packaging, and Orderable Information....28

4 Pin Configuration and Functions

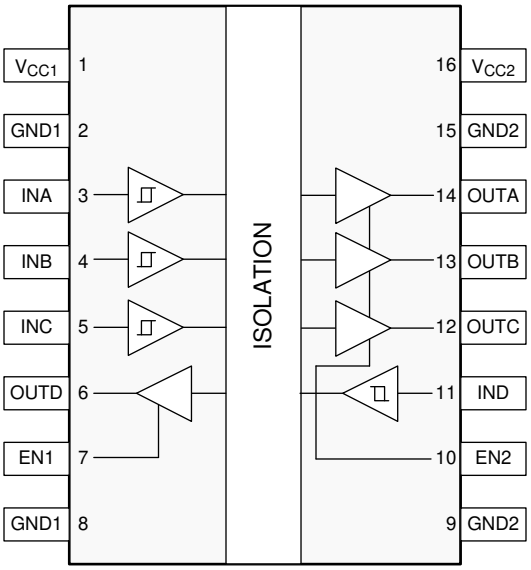

Figure 4-1. ISO7741E-Q1 DW Package 16-Pin SOIC-WB Top View

4.1 Pin Functions

PIN		Type (1)	DESCRIPTION
NAME	NUMBER		
EN1	7	I	Output enable 1. Output pins on side 1 are enabled when EN1 is high or open and in high-impedance state when EN1 is low.
EN2	10	I	Output enable 2. Output pins on side 2 are enabled when EN2 is high or open and in high-impedance state when EN2 is low.
GND1	2	—	Ground connection for V_{CC1}
	8		
GND2	9	—	Ground connection for V_{CC2}
	15		
INA	3	I	Input, channel A
INB	4	I	Input, channel B
INC	5	I	Input, channel C
IND	11	I	Input, channel D
OUTA	14	O	Output, channel A
OUTB	13	O	Output, channel B
OUTC	12	O	Output, channel C
OUTD	6	O	Output, channel D
V_{CC1}	1	—	Power supply, side 1
V_{CC2}	16	—	Power supply, side 2

(1) I = Input, O = Output

Copyright © 2024 Texas Instruments Incorporated

5 Specifications

5.1 Absolute Maximum Ratings

See [1]

		MIN	MAX	UNIT
V_{CC1}, V_{CC2}	Supply voltage[2]	–0.5	6	V
V	Voltage at INx, OUTx, ENx	–0.5	V_{CCX} + 0.5[3]	V
I_O	Output current	–15	15	mA
T_J	Junction temperature		175	°C
T_{stg}	Storage temperature	–65	150	°C

(1) Operation outside the *Absolute Maximum Ratings* may cause permanent device damage. *Absolute Maximum Ratings* do not imply functional operation of the device at these or any other conditions beyond those listed under *Recommended Operating Conditions*. If used outside the *Recommended Operating Conditions* but within the *Absolute Maximum Ratings*, the device may not be fully functional, and this may affect device reliability, functionality, performance, and shorten the device lifetime.
(2) All voltage values except differential I/O bus voltages are with respect to the local ground terminal (GND1 or GND2) and are peak voltage values.
(3) Maximum voltage must not exceed 6 V.

5.2 ESD Ratings

			VALUE	UNIT
$V_{(ESD)}$	Electrostatic discharge	Human-body model (HBM), per AEC Q100-002[1] HBM ESD Classification Level 3A	±4000	V
		Charged-device model (CDM), per AEC Q100-011 CDM ESD Classification Level C6	±1500	
		Contact Discharge per IEC 61000-4-2 Isolation Barrier Withstand Test[2] [3]	±8000	

(1) AEC Q100-002 indicates that HBM stressing shall be in accordance with the ANSI/ESDA/JEDEC JS-001 specification.
(2) IEC ESD strike is applied across the barrier with all pins on each side tied together creating a two-terminal device.
(3) Testing is carried out in air or oil to determine the intrinsic contact discharge capability of the device.

5.3 Recommended Operating Conditions

			MIN	NOM	MAX	UNIT
V_{CC1}, V_{CC2}	Supply voltage		2.25		5.5	V
$V_{CC(UVLO+)}$	UVLO threshold when supply voltage is rising			2	2.25	V
$V_{CC(UVLO-)}$	UVLO threshold when supply voltage is falling		1.7	1.8		V
$V_{HYS(UVLO)}$	Supply voltage UVLO hysteresis		100	200		mV
I_{OH}	High-level output current	V_{CCO} [1] = 5 V	–4			mA
		V_{CCO} = 3.3 V	–2			
		V_{CCO} = 2.5 V	–1			
I_{OL}	Low-level output current	V_{CCO} = 5 V			4	mA
		V_{CCO} = 3.3 V			2	
		V_{CCO} = 2.5 V			1	
V_{IH}	High-level input voltage		0.7 × V_{CCI} [1]		V_{CCI}	V
V_{IL}	Low-level input voltage		0		0.3 × V_{CCI}	V
DR	Data rate		0		100	Mbps
T_A	Ambient temperature		-40	25	150	°C

(1) V_{CCI} = Input-side V_{CC}; V_{CCO} = Output-side V_{CC}.

Copyright © 2024 Texas Instruments Incorporated

5.4 Thermal Information

THERMAL METRIC[1]		ISO7741E-Q1 DW (SOIC) 16 Pins	UNIT
$R_{\theta JA}$	Junction-to-ambient thermal resistance	83.4	°C/W
$R_{\theta JC(top)}$	Junction-to-case(top) thermal resistance	46	°C/W
$R_{\theta JB}$	Junction-to-board thermal resistance	48	°C/W
ψ_{JT}	Junction-to-top characterization parameter	19.1	°C/W
ψ_{JB}	Junction-to-board characterization parameter	47.5	°C/W
$R_{\theta JC(bottom)}$	Junction-to-case(bottom) thermal resistance	—	°C/W

(1) For more information about traditional and new thermal metrics, see the *Semiconductor and IC Package Thermal Metrics* application note.

5.5 Power Rating

PARAMETER		TEST CONDITIONS	MIN	TYP	MAX	UNIT
P_D	Maximum power dissipation	$V_{CC1} = V_{CC2} = 5.5$ V, $T_J = 175$°C, $C_L = 15$ pF, Input a 50-MHz 50% duty cycle square wave			200	mW
P_{D1}	Maximum power dissipation by side-1				75	mW
P_{D2}	Maximum power dissipation by side-2				125	mW

Copyright © 2024 Texas Instruments Incorporated

5.6 Insulation Specifications

PARAMETER		TEST CONDITIONS	VALUE DW-16	UNIT
CLR	External clearance(1)	Shortest terminal-to-terminal distance through air	>8	mm
CPG	External creepage(1)	Shortest terminal-to-terminal distance across the package surface	>8	mm
DTI	Distance through the insulation	Minimum internal gap (internal clearance)	>21	mm
CTI	Comparative tracking index	DIN EN 60112 (VDE 0303-11); IEC 60112	>600	V
	Material group	According to IEC 60664-1	I	
	Overvoltage category per IEC 60664-1	Rated mains voltage ≤ 300 V_{RMS}	I-IV	
		Rated mains voltage ≤ 600 V_{RMS}	I-IV	
		Rated mains voltage ≤ 1000 V_{RMS}	I-III	
DIN EN IEC 60747 (VDE 0884-17)(2)				
V_{IORM}	Maximum repetitive peak isolation voltage	AC voltage (bipolar)	2121	V_{PK}
V_{IOWM}	Maximum working isolation voltage	AC voltage; Time dependent dielectric breakdown (TDDB) Test; See Figure 8-7	1500	V_{RMS}
		DC voltage	2121	V_{DC}
V_{IOTM}	Maximum transient isolation voltage	$V_{TEST} = V_{IOTM}$, t = 60 s (qualification); $V_{TEST} = 1.2 \times V_{IOTM}$, t= 1 s (100% production)	8000	V_{PK}
V_{IMP}	Maximum impulse voltage(3)	Tested in air, 1.2/50-µs waveform per IEC 62368-1	8000	V_{PK}
V_{IOSM}	Maximum surge isolation voltage(4)	$V_{IOSM} \geq 1.3 \times V_{IMP}$; Tested in oil (qualification test), 1.2/50-µs waveform per IEC 62368-1	12800	V_{PK}
q_{pd}	Apparent charge(5)	Method a, After Input-output safety test subgroup 2/3, $V_{ini} = V_{IOTM}$, t_{ini} = 60 s; $V_{pd(m)} = 1.2 \times V_{IORM}$, t_m = 10 s	≤5	pC
		Method a, After environmental tests subgroup 1, $V_{ini} = V_{IOTM}$, t_{ini} = 60 s; $V_{pd(m)} = 1.6 \times V_{IORM}$, t_m = 10 s	≤5	
		Method b; At routine test (100% production); $V_{ini} = 1.2 \times V_{IOTM}$, t_{ini} = 1 s; $V_{pd(m)} = 1.875 \times V_{IORM}$, t_m = 1 s (method b1) or $V_{pd(m)} = V_{ini}$, $t_m = t_{ini}$ (method b2)	≤5	
C_{IO}	Barrier capacitance, input to output(6)	V_{IO} = 0.4 x sin (2pft), f = 1 MHz	≅1	pF
R_{IO}	Isolation resistance(6)	V_{IO} = 500 V, T_A = 25°C	$>10^{12}$	Ω
		V_{IO} = 500 V, 100°C ≤ T_A ≤ 125°C	$>10^{11}$	
		V_{IO} = 500 V at T_S = 150°C	$>10^{9}$	
	Pollution degree		2	
	Climatic category		40/150/21	
UL 1577				
V_{ISO}	Maximum withstanding isolation voltage	$V_{TEST} = V_{ISO}$, t = 60 s (qualification), $V_{TEST} = 1.2 \times V_{ISO}$, t = 1 s (100% production)	5000	V_{RMS}

(1) Creepage and clearance requirements should be applied according to the specific equipment isolation standards of an application. Care should be taken to maintain the creepage and clearance distance of a board design to ensure that the mounting pads of the isolator on the printed-circuit board do not reduce this distance. Creepage and clearance on a printed-circuit board become equal in certain cases. Techniques such as inserting grooves and/or ribs on a printed-circuit board are used to help increase these specifications.
(2) This coupler is suitable for *safe electrical insulation* only within the safety ratings. Compliance with the safety ratings shall be ensured by means of suitable protective circuits.
(3) Testing is carried out in air to determine the intrinsic surge immunity of the isolation barrier.
(4) Testing is carried out in oil to determine the surge immunity of the package.
(5) Apparent charge is electrical discharge caused by a partial discharge (pd).
(6) All pins on each side of the barrier tied together creating a two-terminal device.

Copyright © 2024 Texas Instruments Incorporated

5.7 Safety-Related Certifications

VDE	CSA	UL	CQC	TUV
Certified according to DIN EN IEC 60747-17 (VDE 0884-17)	Certified according to IEC 62368-1 and IEC 61010-1	Recognized under UL 1577 Component Recognition Program	Certified according to GB 4943.1	Certified according to EN 61010-1 and EN 62368-1
Maximum transient isolation voltage, 8000 V_{PK} Maximum repetitive peak isolation voltage, 2121 V_{PK}; Maximum surge isolation voltage, 12800 V_{PK}	Reinforced insulation per CSA 62368-1 and IEC 62368-1 800 V_{RMS} max working voltage (pollution degree 2, material group I); Reinforced insulation per CSA 61010-1 and IEC 61010-1 600 V_{RMS} max working voltage (pollution degree 2, material group I)	Single protection, 5000 V_{RMS}	Reinforced Insulation, Altitude ≤ 5000 m, Tropical Climate, 700 V_{RMS} maximum working voltage;	5000 V_{RMS} Reinforced insulation per EN 61010-1 up to working voltage of 600 V_{RMS}
				5000 V_{RMS} Reinforced insulation per EN 62368-1 up to working voltage of 800 V_{RMS}
Certificate number: 40040142	Master contract number: 220991	File number: E181974	Certificate number: CQC15001121716	Client ID number: 77311

5.8 Safety Limiting Values

Safety limiting[(1)] intends to minimize potential damage to the isolation barrier upon failure of input or output circuitry. A failure of the I/O can allow low resistance to ground or the supply and, without current limiting, dissipate sufficient power to overheat the die and damage the isolation barrier potentially leading to secondary system failures.

PARAMETER		TEST CONDITIONS	MIN	TYP	MAX	UNIT
I_S	Safety input, output, or supply current	$R_{\theta JA}$ = 83.4 °C/W, V_I = 5.5 V, T_J = 175°C, T_A = 25°C, see Figure 5-1			327	mA
		$R_{\theta JA}$ = 83.4 °C/W, V_I = 3.6 V, T_J = 175°C, T_A = 25°C, see Figure 5-1			500	
		$R_{\theta JA}$ = 83.4 °C/W, V_I = 2.75 V, T_J = 175°C, T_A = 25°C, see Figure 5-1			654	
P_S	Safety input, output, or total power	$R_{\theta JA}$ = 83.4 °C/W, T_J = 175°C, T_A = 25°C, see Figure 5-2			1799	mW
T_S	Maximum safety temperature				175	°C

(1) The maximum safety temperature, T_S, has the same value as the maximum junction temperature, T_J, specified for the device. The I_S and P_S parameters represent the safety current and safety power respectively. The maximum limits of I_S and P_S should not be exceeded. These limits vary with the ambient temperature, T_A.
The junction-to-air thermal resistance, $R_{\theta JA}$, in the table is that of a device installed on a high-K test board for leaded surface-mount packages. Use these equations to calculate the value for each parameter:
$T_J = T_A + R_{\theta JA} \times P$, where P is the power dissipated in the device.
$T_{J(max)} = T_S = T_A + R_{\theta JA} \times P_S$, where $T_{J(max)}$ is the maximum allowed junction temperature.
$P_S = I_S \times V_I$, where V_I is the maximum input voltage.

Copyright © 2024 Texas Instruments Incorporated

5.9 Electrical Characteristics—5-V Supply

V_{CC1} = V_{CC2} = 5 V ±10% (over recommended operating conditions unless otherwise noted)

PARAMETER		TEST CONDITIONS	MIN	TYP	MAX	UNIT
V_{OH}	High-level output voltage	I_{OH} = –4 mA; see Figure 6-1	V_{CCO} (1) – 0.4	4.8		V
V_{OL}	Low-level output voltage	I_{OL} = 4 mA; see Figure 6-1		0.2	0.4	V
$V_{IT+(IN)}$	Rising input voltage threshold			0.6 × V_{CCI}	0.7 × V_{CCI}	V
$V_{IT-(IN)}$	Falling input voltage threshold		0.3 × V_{CCI}	0.4 × V_{CCI}		V
$V_{I(HYS)}$	Input threshold voltage hysteresis		0.1 × V_{CCI}	0.2 × V_{CCI}		V
I_{IH}	High-level input current	V_{IH} = V_{CCI} (1) at INx or ENx			10	µA
I_{IL}	Low-level input current	V_{IL} = 0 V at INx or ENx	–10			µA
CMTI	Common-mode transient immunity	V_I = V_{CCI} or 0 V, V_{CM} = 1200 V; see Figure 6-4	85	100		kV/µs
C_I	Input Capacitance(2)	V_I = V_{CC}/ 2 + 0.4×sin(2πft), f = 1 MHz, V_{CC} = 5 V		2		pF

(1) V_{CCI} = Input-side V_{CC}; V_{CCO} = Output-side V_{CC}.
(2) Measured from input pin to ground.

5.10 Supply Current Characteristics—5-V Supply

V_{CC1} = V_{CC2} = 5 V ±10% (over recommended operating conditions unless otherwise noted).

PARAMETER	TEST CONDITIONS		SUPPLY CURRENT	MIN	TYP	MAX	UNIT
Supply current - Disable	EN1 = EN2 = 0 V; V_I = V_{CCI} (1) (ISO7741E-Q1); V_I = 0 V (ISO7741E-Q1 with F suffix)		I_{CC1}		1	1.7	mA
			I_{CC2}		0.7	1.3	
	EN1 = EN2 = 0 V; V_I = 0 V (ISO7741E-Q1); V_I = V_{CCI} (ISO7741E-Q1 with F suffix)		I_{CC1}		4.3	6.5	
			I_{CC2}		1.8	2.9	
Supply current - DC signal	EN1 = EN2 = V_{CCI}; V_I = V_{CCI} (ISO7741E-Q1); V_I = 0 V (ISO7741E-Q1 with F suffix)		I_{CC1}		1.5	2.4	
			I_{CC2}		2	3.5	
	EN1 = EN2 = V_{CCI}; V_I = 0 V (ISO7741E-Q1); V_I = V_{CCI} (ISO7741E-Q1 with F suffix)		I_{CC1}		4.8	7.3	
			I_{CC2}		3.2	5.3	
Supply current - AC signal	All channels switching with square wave clock input; C_L = 15 pF	1 Mbps	I_{CC1}		3.2	5	
			I_{CC2}		2.8	4.4	
		10 Mbps	I_{CC1}		3.7	5.2	
			I_{CC2}		4.2	6.2	
		100 Mbps	I_{CC1}		8.6	11.3	
			I_{CC2}		18	22	

(1) V_{CCI} = Input-side V_{CC}

5.11 Electrical Characteristics—3.3-V Supply

V_{CC1} = V_{CC2} = 3.3 V ±10% (over recommended operating conditions unless otherwise noted)

PARAMETER		TEST CONDITIONS	MIN	TYP	MAX	UNIT
V_{OH}	High-level output voltage	I_{OH} = –2 mA; see Figure 6-1	V_{CCO} (1) – 0.3	3.2		V
V_{OL}	Low-level output voltage	I_{OL} = 2 mA; see Figure 6-1		0.1	0.3	V
$V_{IT+(IN)}$	Rising input voltage threshold			0.6 × V_{CCI}	0.7 × V_{CCI}	V
$V_{IT-(IN)}$	Falling input voltage threshold		0.3 × V_{CCI}	0.4 × V_{CCI}		V
$V_{I(HYS)}$	Input threshold voltage hysteresis		0.1 × V_{CCI}	0.2 × V_{CCI}		V
I_{IH}	High-level input current	V_{IH} = V_{CCI} (1) at INx or ENx			10	µA
I_{IL}	Low-level input current	V_{IL} = 0 V at INx or ENx	–10			µA
CMTI	Common-mode transient immunity	V_I = V_{CCI} or 0 V, V_{CM} = 1200 V; see Figure 6-4	85	100		kV/µs

(1) V_{CCI} = Input-side V_{CC}; V_{CCO} = Output-side V_{CC}.

5.12 Supply Current Characteristics—3.3-V Supply

V_{CC1} = V_{CC2} = 3.3 V ±10% (over recommended operating conditions unless otherwise noted).

PARAMETER	TEST CONDITIONS		SUPPLY CURRENT	MIN	TYP	MAX	UNIT
Supply current - Disable	EN1 = EN2 = 0 V; V_I = V_{CCI} (1) (ISO7741E-Q1); V_I = 0 V (ISO7741E-Q1 with F suffix)		I_{CC1}		1	1.7	mA
			I_{CC2}		0.7	1.3	
	EN1 = EN2 = 0 V; V_I = 0 V (ISO7741E-Q1); V_I = V_{CCI} (ISO7741E-Q1 with F suffix)		I_{CC1}		4.3	6.4	
			I_{CC2}		1.9	2.8	
Supply current - DC signal	EN1 = EN2 = V_{CCI}; V_I = V_{CCI} (ISO7741E-Q1); V_I = 0 V (ISO7741E-Q1 with F suffix)		I_{CC1}		1.5	2.4	
			I_{CC2}		2	3.5	
	EN1 = EN2 = V_{CCI}; V_I = 0 V (ISO7741E-Q1); V_I = V_{CCI} (ISO7741E-Q1 with F suffix)		I_{CC1}		4.8	7.2	
			I_{CC2}		3.2	5.3	
Supply current - AC signal	All channels switching with square wave clock input; C_L = 15 pF	1 Mbps	I_{CC1}		3.2	4.6	
			I_{CC2}		2.7	4.3	
		10 Mbps	I_{CC1}		3.5	5	
			I_{CC2}		3.7	5.4	
		100 Mbps	I_{CC1}		6.8	9.3	
			I_{CC2}		13.7	16.5	

(1) V_{CCI} = Input-side V_{CC}

Copyright © 2024 Texas Instruments Incorporated

5.13 Electrical Characteristics—2.5-V Supply

V_{CC1} = V_{CC2} = 2.5 V ±10% (over recommended operating conditions unless otherwise noted)

PARAMETER		TEST CONDITIONS	MIN	TYP	MAX	UNIT
V_{OH}	High-level output voltage	I_{OH} = –1 mA; see Figure 6-1	V_{CCO} (1) – 0.2	2.45		V
V_{OL}	Low-level output voltage	I_{OL} = 1 mA; see Figure 6-1		0.05	0.2	V
$V_{IT+(IN)}$	Rising input voltage threshold			0.6 × V_{CCI}	0.7 × V_{CCI}	V
$V_{IT-(IN)}$	Falling input voltage threshold		0.3 × V_{CCI}	0.4 × V_{CCI}		V
$V_{I(HYS)}$	Input threshold voltage hysteresis		0.1 × V_{CCI}	0.2 × V_{CCI}		V
I_{IH}	High-level input current	V_{IH} = V_{CCI} (1) at INx or ENx			10	µA
I_{IL}	Low-level input current	V_{IL} = 0 V at INx or ENx	–10			µA
CMTI	Common-mode transient immunity	V_I = V_{CCI} or 0 V, V_{CM} = 1200 V; see Figure 6-4	85	100		kV/µs

(1) V_{CCI} = Input-side V_{CC}; V_{CCO} = Output-side V_{CC}.

5.14 Supply Current Characteristics—2.5-V Supply

V_{CC1} = V_{CC2} = 2.5 V ±10% (over recommended operating conditions unless otherwise noted).

PARAMETER	TEST CONDITIONS		SUPPLY CURRENT	MIN	TYP	MAX	UNIT
Supply current - Disable	EN1 = EN2 = 0 V; V_I = V_{CCI} (1) (ISO7741E-Q1); V_I = 0 V (ISO7741E-Q1 with F suffix)		I_{CC1}		1	1.7	mA
			I_{CC2}		0.7	1.2	
	EN1 = EN2 = 0 V; V_I = 0 V (ISO7741E-Q1); V_I = V_{CCI} (ISO7741E-Q1 with F suffix)		I_{CC1}		4.3	6.4	
			I_{CC2}		1.8	2.8	
Supply current - DC signal	EN1 = EN2 = V_{CCI}; V_I = V_{CCI} (ISO7741E-Q1); V_I = 0 V (ISO7741E-Q1 with F suffix)		I_{CC1}		1.4	2.4	
			I_{CC2}		2	3.4	
	EN1 = EN2 = V_{CCI}; V_I = 0 V (ISO7741E-Q1); V_I = V_{CCI} (ISO7741E-Q1 with F suffix)		I_{CC1}		4.7	7.2	
			I_{CC2}		3.2	5.3	
Supply current - AC signal	All channels switching with square wave clock input; C_L = 15 pF	1 Mbps	I_{CC1}		3.1	5	
			I_{CC2}		2.7	4.4	
		10 Mbps	I_{CC1}		3.4	4.9	
			I_{CC2}		3.5	5.1	
		100 Mbps	I_{CC1}		6.2	8.3	
			I_{CC2}		10.8	13.8	

(1) V_{CCI} = Input-side V_{CC}

5.15 Switching Characteristics—5-V Supply

V_{CC1} = V_{CC2} = 5 V ±10% (over recommended operating conditions unless otherwise noted)

PARAMETER		TEST CONDITIONS	MIN	TYP	MAX	UNIT
t_{PLH}, t_{PHL}	Propagation delay time	See Figure 6-1	6	10.7	16.5	ns
PWD	Pulse width distortion(1) $\|t_{PHL} – t_{PLH}\|$			0	4.9	ns
$t_{sk(o)}$	Channel-to-channel output skew time(2)	Same-direction channels			4	ns
$t_{sk(pp)}$	Part-to-part skew time(3)				4.4	ns
t_r	Output signal rise time	See Figure 6-1		2.4	4.1	ns
t_f	Output signal fall time			2.4	4.1	ns
t_{PHZ}	Disable propagation delay, high-to-high impedance output	See Figure 6-2		9	20	ns
t_{PLZ}	Disable propagation delay, low-to-high impedance output			9	20	ns
t_{PZH}	Enable propagation delay, high impedance-to-high output for ISO7741E-Q1			7	20	ns
	Enable propagation delay, high impedance-to-high output for ISO7741E-Q1 with F suffix			3	8.5	µs
t_{PZL}	Enable propagation delay, high impedance-to-low output for ISO7741E-Q1			3	8.5	µs
	Enable propagation delay, high impedance-to-low output for ISO7741E-Q1 with F suffix			7	20	ns
t_{DO}	Default output delay time from input power loss	Measured from the time V_{CC} goes below 1.7 V. See Figure 6-4		0.1	0.3	µs
t_{ie}	Time interval error	2^{16} – 1 PRBS data at 100 Mbps		0.8		ns

(1) Also known as pulse skew.
(2) $t_{sk(o)}$ is the skew between outputs of a single device with all driving inputs connected together and the outputs switching in the same direction while driving identical loads.
(3) $t_{sk(pp)}$ is the magnitude of the difference in propagation delay times between any terminals of different devices switching in the same direction while operating at identical supply voltages, temperature, input signals and loads.

5.16 Switching Characteristics—3.3-V Supply

V_{CC1} = V_{CC2} = 3.3 V ±10% (over recommended operating conditions unless otherwise noted)

PARAMETER		TEST CONDITIONS	MIN	TYP	MAX	UNIT
t_{PLH}, t_{PHL}	Propagation delay time	See Figure 6-1	6	11	16.5	ns
PWD	Pulse width distortion(1) $\|t_{PHL} – t_{PLH}\|$			0.1	5	ns
$t_{sk(o)}$	Channel-to-channel output skew time(2)	Same-direction channels			4.1	ns
$t_{sk(pp)}$	Part-to-part skew time(3)				4.5	ns
t_r	Output signal rise time	See Figure 6-1		1.3	3.1	ns
t_f	Output signal fall time			1.3	3.1	ns
t_{PHZ}	Disable propagation delay, high-to-high impedance output	See Figure 6-2		17	30	ns
t_{PLZ}	Disable propagation delay, low-to-high impedance output			17	30	ns
t_{PZH}	Enable propagation delay, high impedance-to-high output for ISO7741E-Q1			17	30	ns
	Enable propagation delay, high impedance-to-high output for ISO7741E-Q1 with F suffix			3.2	8.5	µs
t_{PZL}	Enable propagation delay, high impedance-to-low output for ISO7741E-Q1			3.2	8.5	µs
	Enable propagation delay, high impedance-to-low output for ISO7741E-Q1 with F suffix			17	30	ns
t_{DO}	Default output delay time from input power loss	Measured from the time V_{CC} goes below 1.7 V. See Figure 6-4		0.1	0.3	µs
t_{ie}	Time interval error	2^{16} – 1 PRBS data at 100 Mbps		0.9		ns

(1) Also known as pulse skew.
(2) $t_{sk(o)}$ is the skew between outputs of a single device with all driving inputs connected together and the outputs switching in the same direction while driving identical loads.
(3) $t_{sk(pp)}$ is the magnitude of the difference in propagation delay times between any terminals of different devices switching in the same direction while operating at identical supply voltages, temperature, input signals and loads.

Copyright © 2024 Texas Instruments Incorporated

5.17 Switching Characteristics—2.5-V Supply

V_{CC1} = V_{CC2} = 2.5 V ±10% (over recommended operating conditions unless otherwise noted)

PARAMETER		TEST CONDITIONS	MIN	TYP	MAX	UNIT
t_{PLH}, t_{PHL}	Propagation delay time	See Figure 6-1	7.5	12	19	ns
PWD	Pulse width distortion(1) $\lvert t_{PHL} – t_{PLH} \rvert$			0.2	5.1	ns
$t_{sk(o)}$	Channel-to-channel output skew time(2)	Same-direction Channels			4.1	ns
$t_{sk(pp)}$	Part-to-part skew time(3)				4.6	ns
t_r	Output signal rise time	See Figure 6-1		1	3.6	ns
t_f	Output signal fall time			1	3.6	ns
t_{PHZ}	Disable propagation delay, high-to-high impedance output	See Figure 6-2		22	40	ns
t_{PLZ}	Disable propagation delay, low-to-high impedance output			22	40	ns
t_{PZH}	Enable propagation delay, high impedance-to-high output for ISO7741E-Q1			18	40	ns
	Enable propagation delay, high impedance-to-high output for ISO7741E-Q1 with F suffix			3.3	8.5	µs
t_{PZL}	Enable propagation delay, high impedance-to-low output for ISO7741E-Q1			3.3	8.5	µs
	Enable propagation delay, high impedance-to-low output for ISO7741E-Q1 with F suffix			18	40	ns
t_{DO}	Default output delay time from input power loss	Measured from the time V_{CC} goes below 1.7 V. See Figure 6-4		0.1	0.3	µs
t_{ie}	Time interval error	2^{16} – 1 PRBS data at 100 Mbps		0.7		ns

(1) Also known as pulse skew.
(2) $t_{sk(o)}$ is the skew between outputs of a single device with all driving inputs connected together and the outputs switching in the same direction while driving identical loads.
(3) $t_{sk(pp)}$ is the magnitude of the difference in propagation delay times between any terminals of different devices switching in the same direction while operating at identical supply voltages, temperature, input signals and loads.

Copyright © 2024 Texas Instruments Incorporated

5.18 Insulation Characteristics Curves

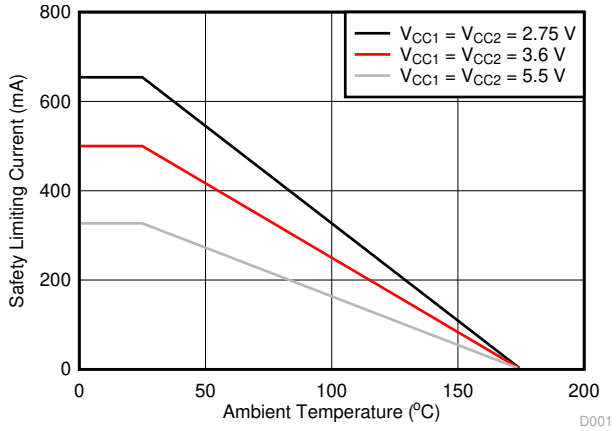

Figure 5-1. Thermal Derating Curve for Safety Limiting Current for DW-16 Package

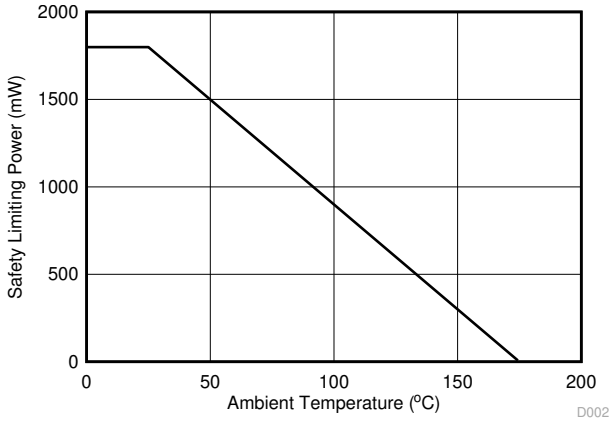

Figure 5-2. Thermal Derating Curve for Safety Limiting Power for DW-16 Package

Copyright © 2024 Texas Instruments Incorporated

5.19 Typical Characteristics

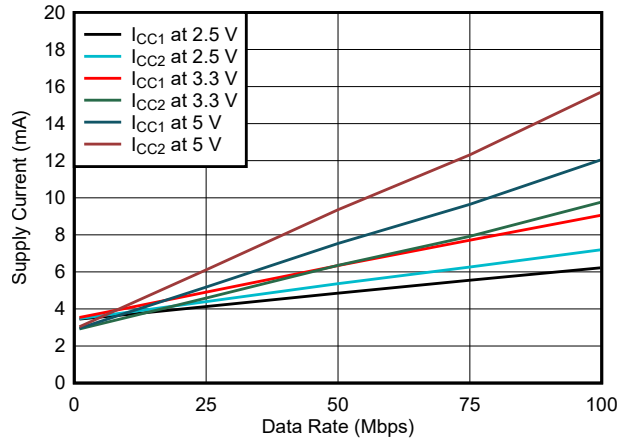

T_A = 25°C C_L = 15 pF

Figure 5-3. Supply Current vs Data Rate (With 15-pF Load)

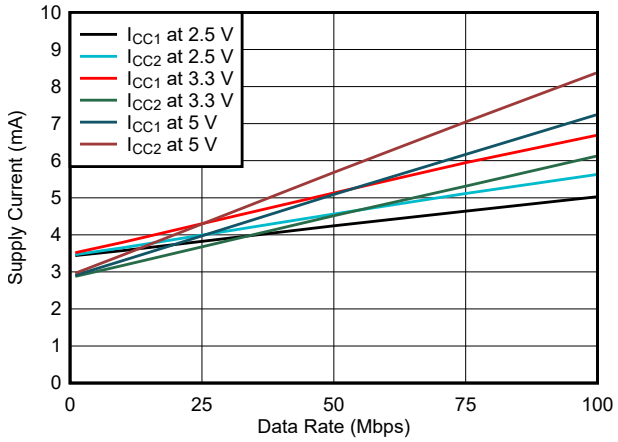

T_A = 25°C C_L = No Load

Figure 5-4. Supply Current vs Data Rate (With No Load)

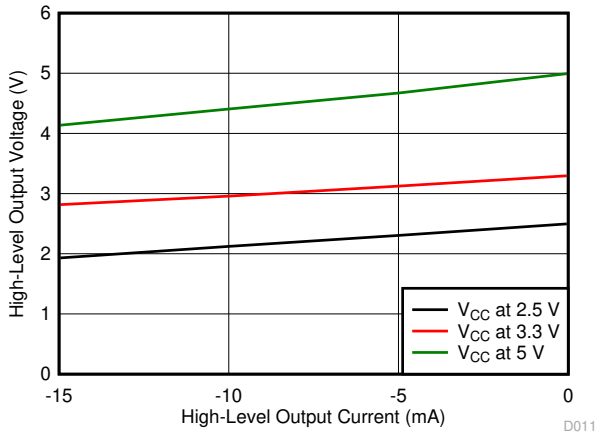

T_A = 25°C

Figure 5-5. High-Level Output Voltage vs High-level Output Current

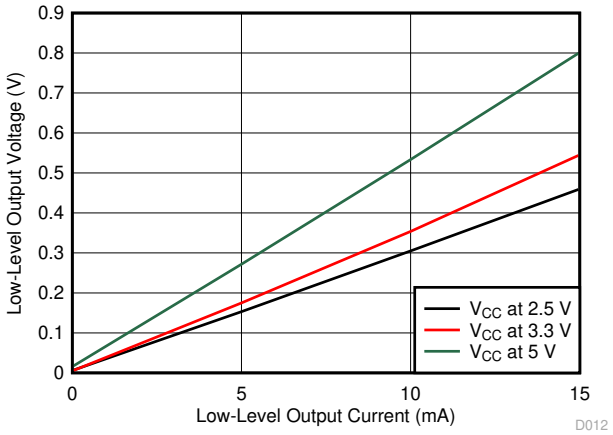

T_A = 25°C

Figure 5-6. Low-Level Output Voltage vs Low-Level Output Current

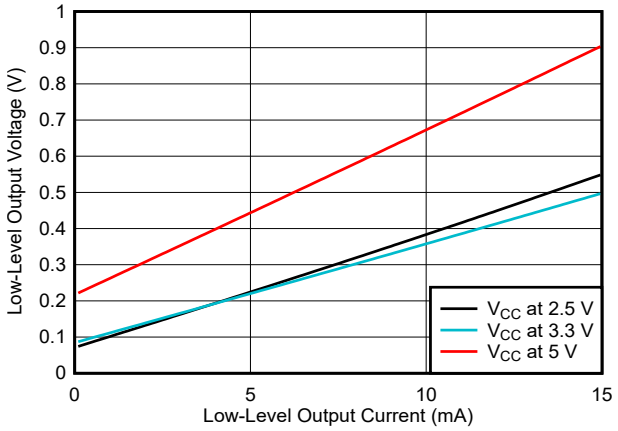

Figure 5-7. Power Supply Undervoltage Threshold vs Free-Air Temperature

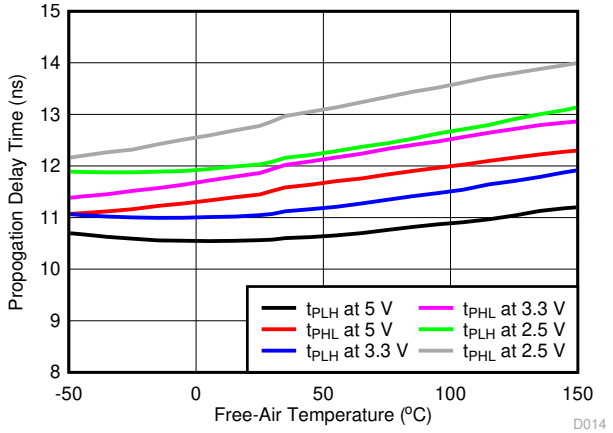

Figure 5-8. Propagation Delay Time vs Free-Air Temperature

6 Parameter Measurement Information

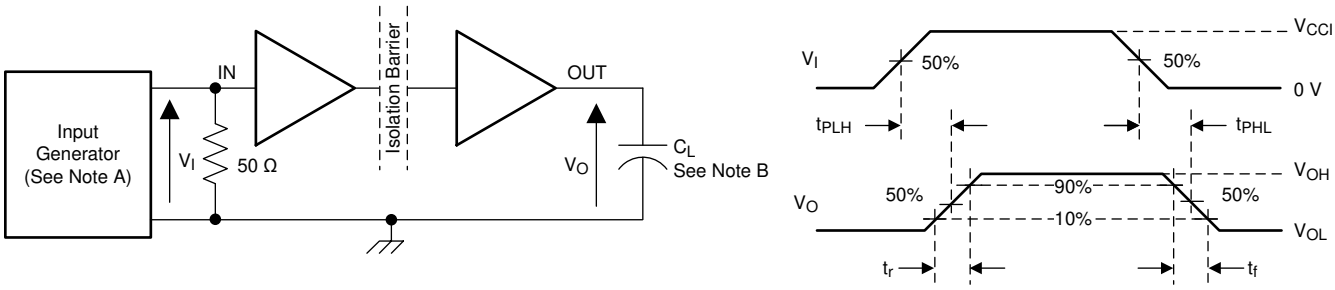

Copyright © 2016, Texas Instruments Incorporated

A. The input pulse is supplied by a generator having the following characteristics: PRR ≤ 50 kHz, 50% duty cycle, t_r ≤ 3 ns, t_f ≤ 3ns, Z_O = 50 Ω. At the input, 50 Ω resistor is required to terminate Input Generator signal. The 50-Ω resistor is not needed in the actual application.

B. C_L = 15 pF and includes instrumentation and fixture capacitance within ±20%.

Figure 6-1. Switching Characteristics Test Circuit and Voltage Waveforms

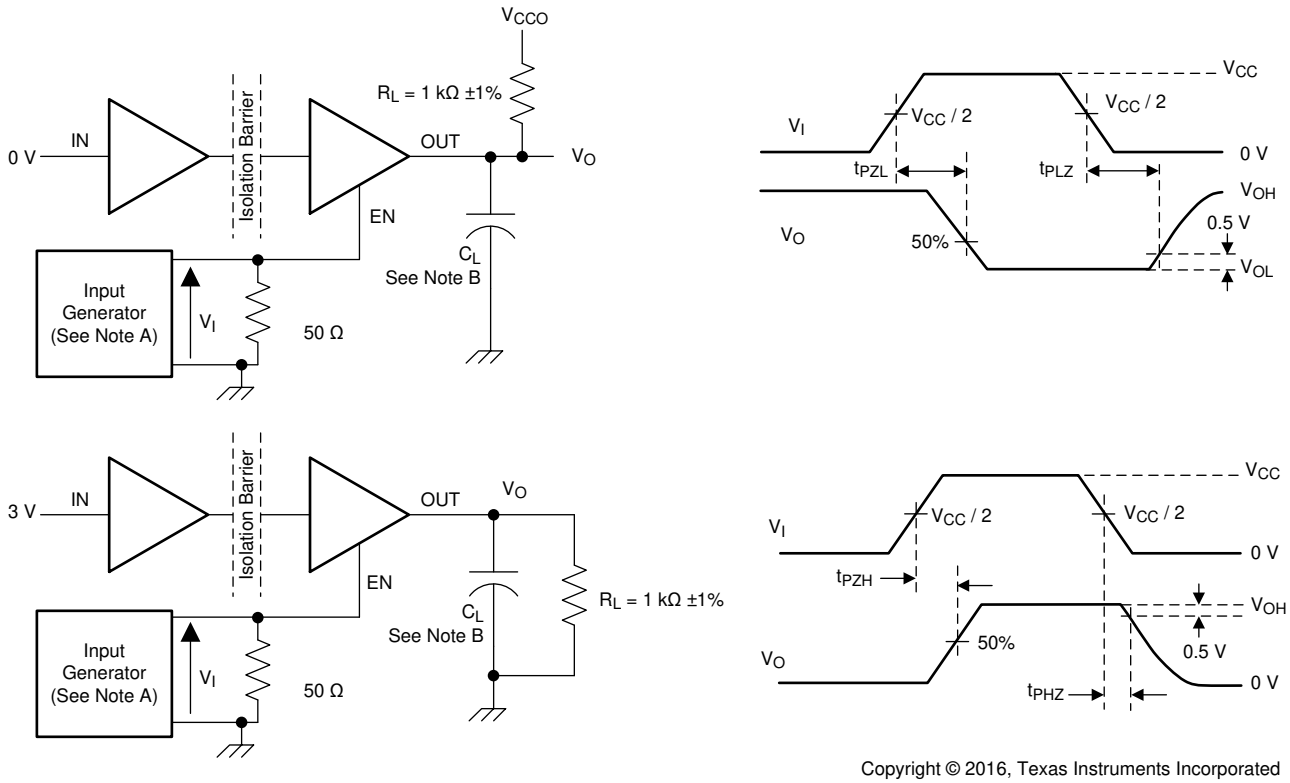

Copyright © 2016, Texas Instruments Incorporated

A. The input pulse is supplied by a generator having the following characteristics: PRR ≤ 10 kHz, 50% duty cycle, t_r ≤ 3 ns, t_f ≤ 3 ns, Z_O = 50 Ω.

B. C_L = 15 pF and includes instrumentation and fixture capacitance within ±20%.

Figure 6-2. Enable/Disable Propagation Delay Time Test Circuit and Waveform

Copyright © 2024 Texas Instruments Incorporated

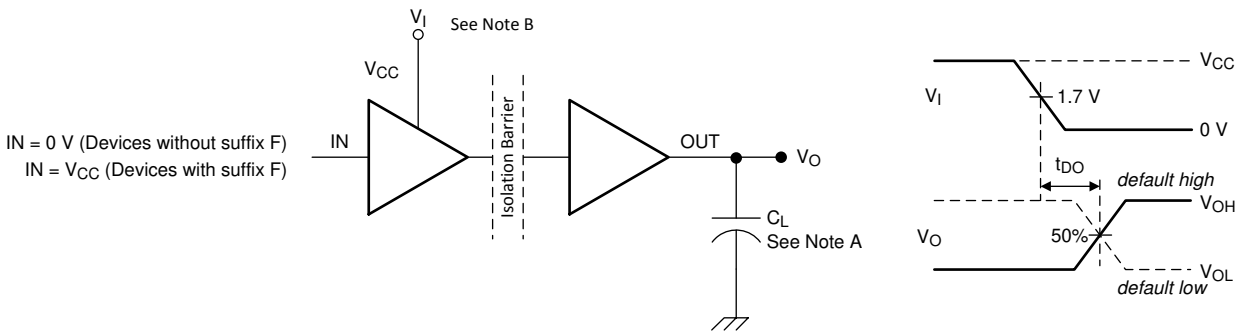

A. C_L = 15 pF and includes instrumentation and fixture capacitance within ±20%.
B. Power Supply Ramp Rate = 10 mV/ns

Figure 6-3. Default Output Delay Time Test Circuit and Voltage Waveforms

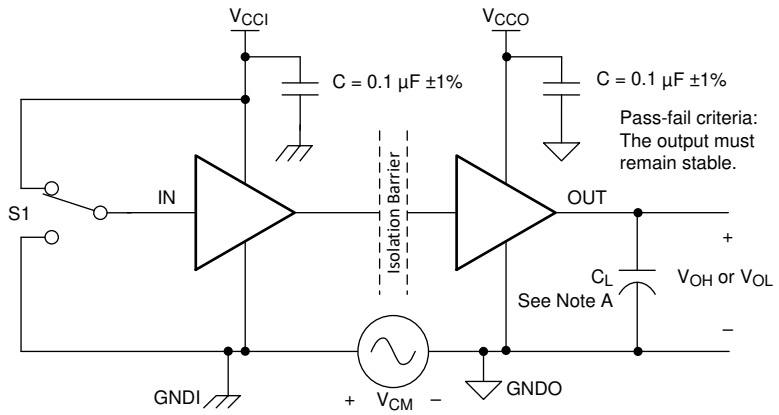

A. C_L = 15 pF and includes instrumentation and fixture capacitance within ±20%.

Figure 6-4. Common-Mode Transient Immunity Test Circuit

7 Detailed Description

7.1 Overview

The ISO7741E-Q1 device has an ON-OFF keying (OOK) modulation scheme to transmit the digital data across a silicon dioxide based isolation barrier. The transmitter sends a high frequency carrier across the barrier to represent one digital state and sends no signal to represent the other digital state. The receiver demodulates the signal after advanced signal conditioning and produces the output through a buffer stage. If the ENx pin is low then the output goes to high impedance. The ISO7741E-Q1 device also incorporates advanced circuit techniques to maximize the CMTI performance and minimize the radiated emissions due to the high frequency carrier and IO buffer switching. The conceptual block diagram of a digital capacitive isolator, Figure 7-1, shows a functional block diagram of a typical channel.

7.2 Functional Block Diagram

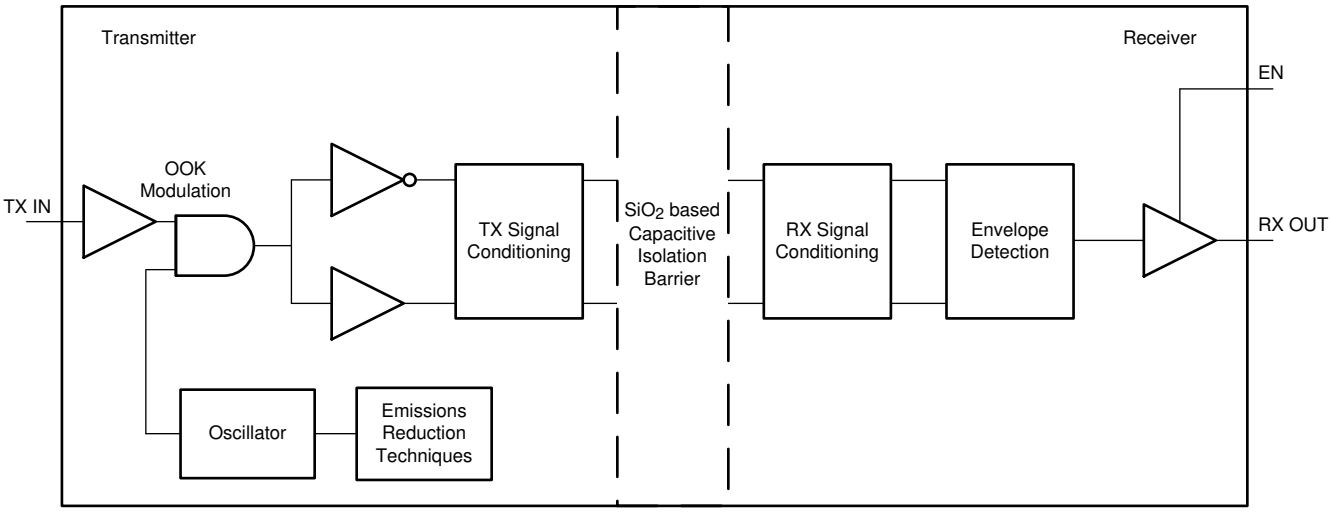

Copyright © 2016, Texas Instruments Incorporated

Figure 7-1. Conceptual Block Diagram of a Digital Capacitive Isolator

Figure 7-2 shows a conceptual detail of how the ON-OFF keying scheme works.

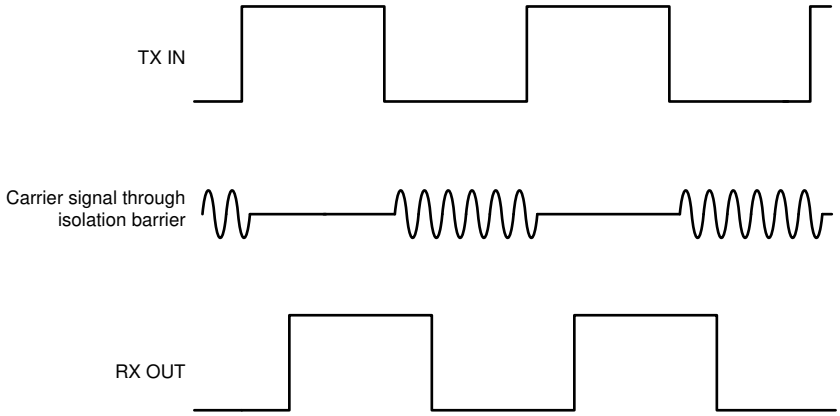

Figure 7-2. On-Off Keying (OOK) Based Modulation Scheme

Copyright © 2024 Texas Instruments Incorporated

7.3 Feature Description

Table 7-1 provides an overview of the device features.

Table 7-1. Device Features

PART NUMBER	CHANNEL DIRECTION	MAXIMUM DATA RATE	DEFAULT OUTPUT	PACKAGE	RATED ISOLATION 1
ISO7741E-Q1	3 Forward, 1 Reverse	100 Mbps	High	DW-16	5000 V_{RMS} / 8000 V_{PK}
ISO7741E-Q1 with F suffix	3 Forward, 1 Reverse	100 Mbps	Low	DW-16	5000 V_{RMS} / 8000 V_{PK}

7.3.1 Electromagnetic Compatibility (EMC) Considerations

Many applications in harsh industrial environment are sensitive to disturbances such as electrostatic discharge (ESD), electrical fast transient (EFT), surge and electromagnetic emissions. These electromagnetic disturbances are regulated by international standards such as IEC 61000-4-x and CISPR 22. Although system-level performance and reliability depends, to a large extent, on the application board design and layout, the ISO7741E-Q1 device incorporates many chip-level design improvements for overall system robustness. Some of these improvements include:

- Robust ESD protection cells for input and output signal pins and inter-chip bond pads.
- Low-resistance connectivity of ESD cells to supply and ground pins.
- Enhanced performance of high voltage isolation capacitor for better tolerance of ESD, EFT and surge events.
- Bigger on-chip decoupling capacitors to bypass undesirable high energy signals through a low impedance path.
- PMOS and NMOS devices isolated from each other by using guard rings to avoid triggering of parasitic SCRs.
- Reduced common mode currents across the isolation barrier by providing purely differential internal operation.

Copyright © 2024 Texas Instruments Incorporated

7.4 Device Functional Modes

Table 7-2 lists the functional modes for the ISO7741E-Q1 device.

Table 7-2. Function Table

V_{CCI}	V_{CCO}	INPUT (INx)[2]	OUTPUT ENABLE (ENx)	OUTPUT (OUTx)	COMMENTS
PU	PU	H	H or open	H	Normal Operation: A channel output assumes the logic state of the input.
		L	H or open	L	
		Open	H or open	Default	Default mode: When INx is open, the corresponding channel output goes to the default logic state. Default is *High* for ISO7741E-Q1 and *Low* for ISO7741E-Q1 with F suffix.
X	PU	X	L	Z	A low value of output enable causes the outputs to be high-impedance.
PD	PU	X	H or open	Default	Default mode: When V_{CCI} is unpowered, a channel output assumes the logic state based on the selected default option. Default is *High* for ISO7741E-Q1 and *Low* for ISO7741E-Q1 with F suffix. When V_{CCI} transitions from unpowered to powered-up, a channel output assumes the logic state of the input. When V_{CCI} transitions from powered-up to unpowered, channel output assumes the selected default state.
X	PD	X	X	Undetermined	When V_{CCO} is unpowered, a channel output is undetermined[1]. When V_{CCO} transitions from unpowered to powered-up, a channel output assumes the logic state of the input.

(1) The outputs are in undetermined state when 1.7 V < V_{CCI}, V_{CCO} < 2.25 V.
(2) A strongly driven input signal can weakly power the floating V_{CC} through an internal protection diode and cause undetermined output.

Copyright © 2024 Texas Instruments Incorporated

7.4.1 Device I/O Schematics

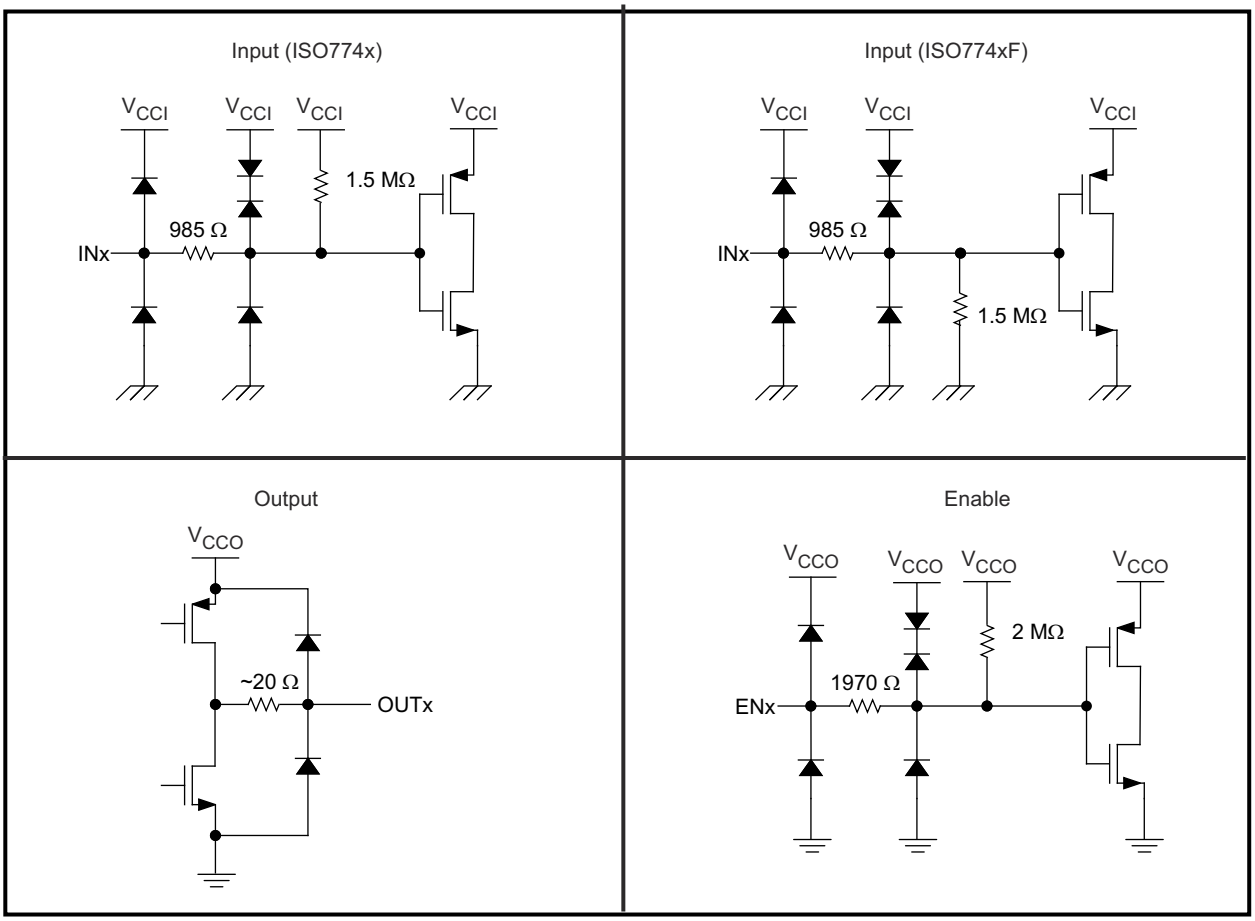

Copyright © 2016, Texas Instruments Incorporated

Figure 7-3. Device I/O Schematics

8 Application and Implementation

Note

Information in the following applications sections is not part of the TI component specification, and TI does not warrant its accuracy or completeness. TI's customers are responsible for determining suitability of components for their purposes. Customers should validate and test their design implementation to confirm system functionality.

8.1 Application Information

The ISO7741E-Q1 devices are high-performance, quad-channel digital isolators. These devices come with enable pins on each side which can be used to put the respective outputs in high impedance for multi-controller driving applications and reduce power consumption. The ISO7741E-Q1 devices use single-ended CMOS-logic switching technology. The voltage range is from 2.25 V to 5.5 V for both supplies, V_{CC1} and V_{CC2}. When designing with digital isolators, keep in mind that because of the single-ended design structure, digital isolators do not conform to any specific interface standard and are only intended for isolating single-ended CMOS or TTL digital signal lines. The isolator is typically placed between the data controller (that is, µC or UART), and a data converter or a line transceiver, regardless of the interface type or standard.

8.2 Typical Application

Figure 8-1 shows ISO7741E-Q1 in belt starter generator application.

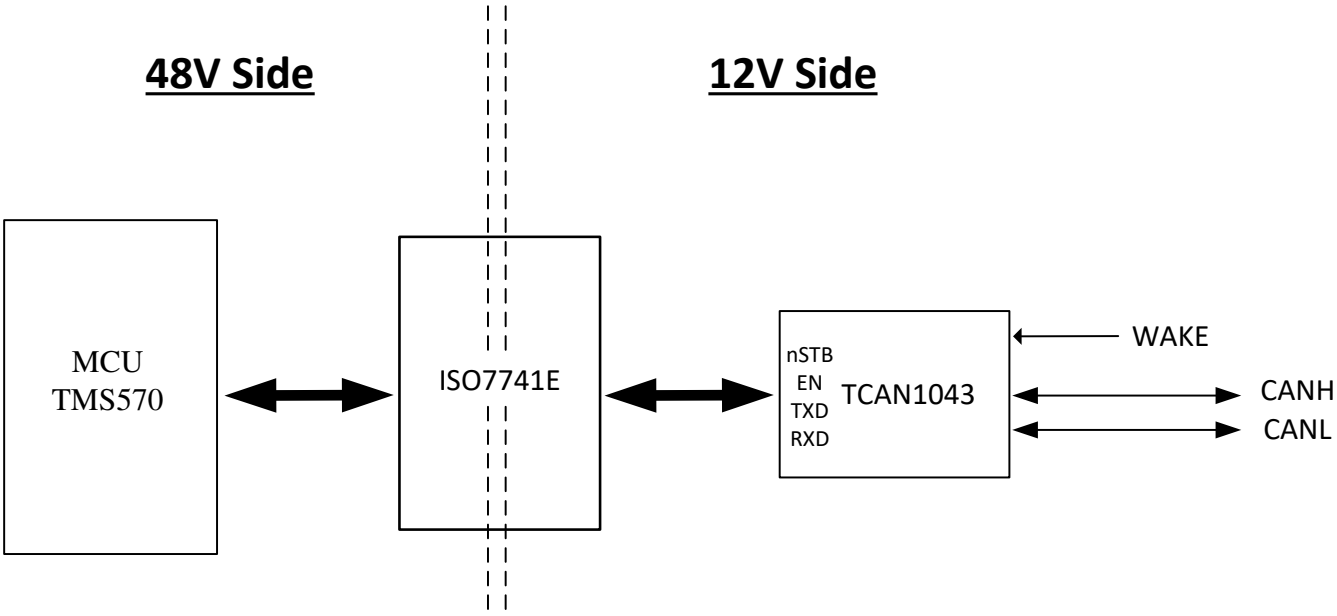

Figure 8-1. Belt Starter Generator Application

Copyright © 2024 Texas Instruments Incorporated

8.2.1 Design Requirements

To design with these devices, use the parameters listed in Table 8-1.

Table 8-1. Design Parameters

PARAMETER	VALUE
Supply voltage, V_{CC1} and V_{CC2}	2.25 to 5.5 V
Decoupling capacitor between V_{CC1} and GND1	0.1 µF
Decoupling capacitor from V_{CC2} and GND2	0.1 µF

8.2.2 Detailed Design Procedure

Unlike optocouplers, which require external components to improve performance, provide bias, or limit current, the ISO7741E-Q1 device only require two external bypass capacitors to operate.

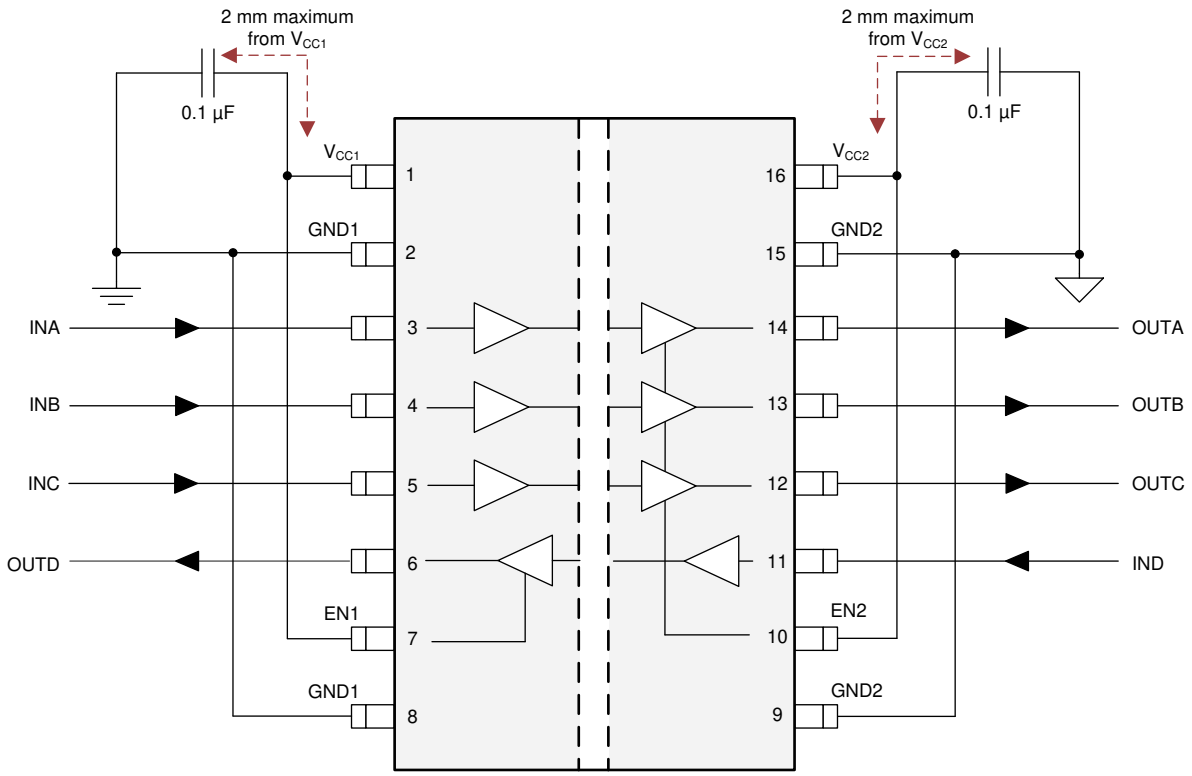

Figure 8-2. Typical ISO7741E-Q1 Circuit Hook-up

The DWW package provides wider creepage and clearance without the need for two isolators in series or an extra isolated power supply, saving design cost and board space. For more details, please refer to the technical document *How to Meet the Higher Isolation Creepage & Clearance Needs in Automotive Applications*.

8.2.3 Application Curve

The following typical eye diagrams of the ISO7741E-Q1 device indicates low jitter and wide open eye at the maximum data rate of 100 Mbps.

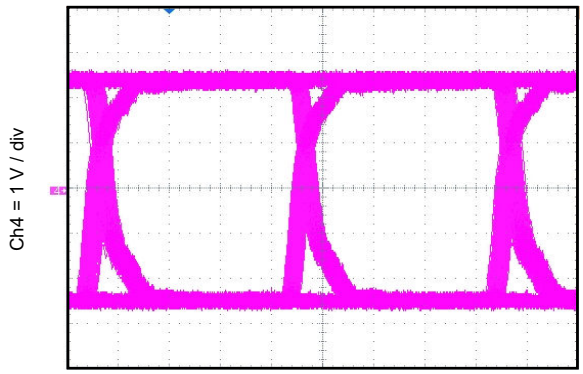

Figure 8-3. Eye Diagram at 100 Mbps PRBS 2^{16} – 1, 5 V and 25°C

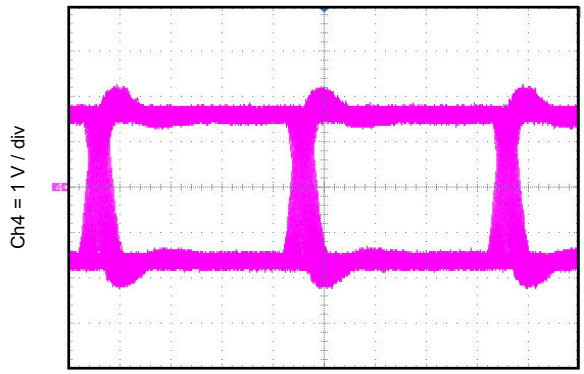

Figure 8-4. Eye Diagram at 100 Mbps PRBS 2^{16} – 1, 3.3 V and 25°C

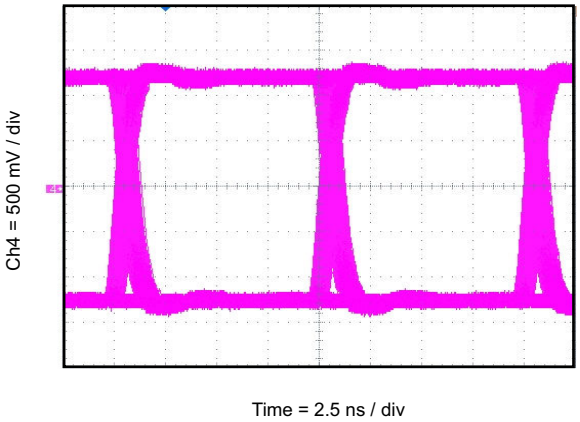

Figure 8-5. Eye Diagram at 100 Mbps PRBS 2^{16} – 1, 2.5 V and 25°C

8.2.3.1 Insulation Lifetime

Insulation lifetime projection data is collected by using industry-standard Time Dependent Dielectric Breakdown (TDDB) test method. In this test, all pins on each side of the barrier are tied together creating a two-terminal device and high voltage applied between the two sides; see also Figure 8-6 for TDDB test setup. The insulation breakdown data is collected at various high voltages switching at 60 Hz over temperature. For reinforced insulation, VDE standard requires the use of TDDB projection line with failure rate of less than 1 part per million (ppm). Even though the expected minimum insulation lifetime is 20 years at the specified working isolation voltage, VDE reinforced certification requires additional safety margin of 20% for working voltage and 50% for lifetime which translates into minimum required insulation lifetime of 30 years at a working voltage that is 20% higher than the specified value.

Figure 8-7 shows the intrinsic capability of the isolation barrier to withstand high voltage stress over the barrier lifetime. Based on the TDDB data, the insulation withstand capability of DW-16 package is 1500 V_{RMS} with a lifetime of 169 years as illustrated in Figure 8-7. Factors, such as package size, pollution degree, and material group can limit the working voltage of a component.

Copyright © 2024 Texas Instruments Incorporated

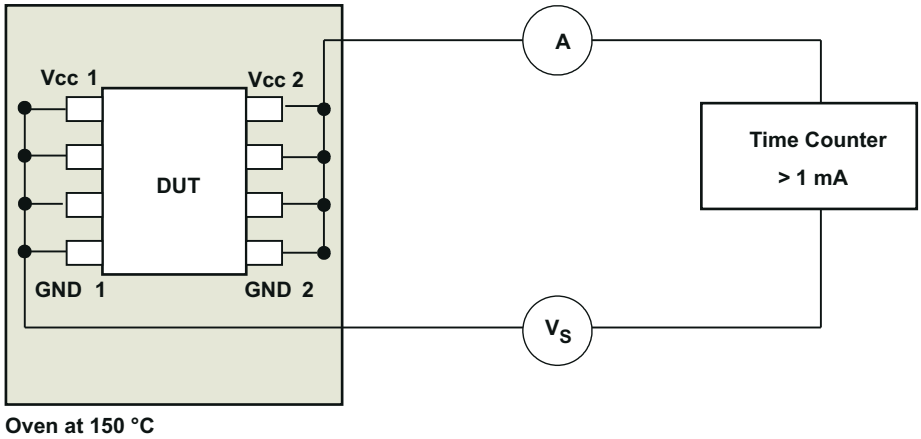

Figure 8-6. Test Setup for Insulation Lifetime Measurement

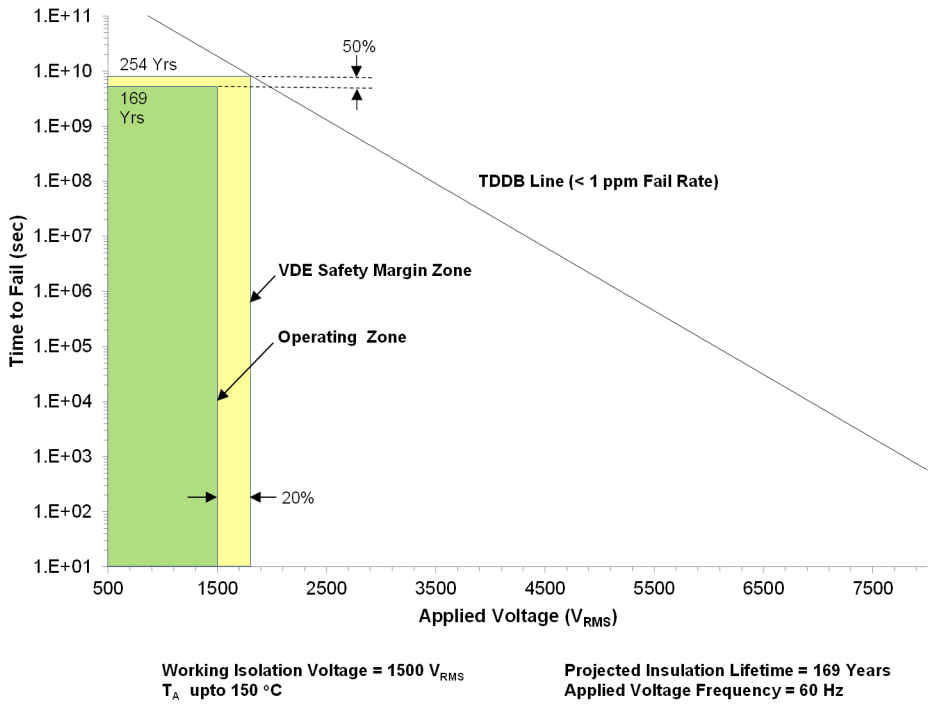

Figure 8-7. Insulation Lifetime Projection Data

9 Power Supply Recommendations

To help provide reliable operation at data rates and supply voltages, a 0.1-µF bypass capacitor is recommended at the input and output supply pins (V_{CC1} and V_{CC2}). The capacitors must be placed as close to the supply pins as possible. If only a single primary-side power supply is available in an application, isolated power can be generated for the secondary-side with the help of a transformer driver such as Texas Instruments' SN6501-Q1 or SN6505B-Q1. For such applications, detailed power supply design and transformer selection recommendations are available in *SN6501-Q1 Transformer Driver for Isolated Power Supplies* and *SN6505x-Q1 Low-Noise 1-A Transformer Drivers for Isolated Power Supplies* data sheets.

10 Layout

10.1 Layout Guidelines

A minimum of four layers is required to accomplish a low EMI PCB design (see Figure 10-1). Layer stacking must be in the following order (top-to-bottom): high-speed signal layer, ground plane, power plane and low-frequency signal layer.

- Routing the high-speed traces on the top layer avoids the use of vias (and the introduction of the inductances) and allows for clean interconnects between the isolator and the transmitter and receiver circuits of the data link.
- Placing a solid ground plane next to the high-speed signal layer establishes controlled impedance for transmission line interconnects and provides an excellent low-inductance path for the return current flow.
- Placing the power plane next to the ground plane creates additional high-frequency bypass capacitance of approximately 100 pF/inch^2.
- Routing the slower speed control signals on the bottom layer allows for greater flexibility as these signal links usually have margin to tolerate discontinuities such as vias.

If an additional supply voltage plane or signal layer is needed, add a second power or ground plane system to the stack to keep the planes symmetrical. This makes the stack mechanically stable and prevents warping. Also the power and ground plane of each power system can be placed closer together, thus increasing the high-frequency bypass capacitance significantly.

For detailed layout recommendations, refer to the *Digital Isolator Design Guide*.

10.1.1 PCB Material

For digital circuit boards operating below 150 Mbps, (or rise and fall times higher than 1 ns), and trace lengths of up to 10 inches, use standard FR-4 UL94V-0 printed circuit boards. This PCB is preferred over cheaper alternatives due to the lower dielectric losses at high frequencies, less moisture absorption, greater strength and stiffness, and self-extinguishing flammability-characteristics.

10.2 Layout Example

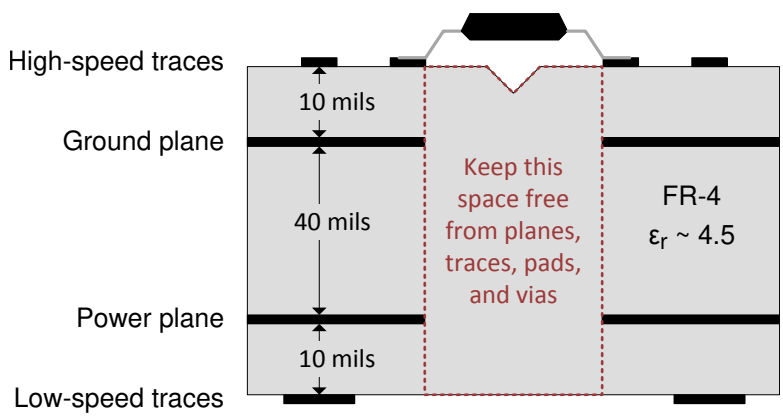

Figure 10-1. Layout Example Schematic

Copyright © 2024 Texas Instruments Incorporated

11 Device and Documentation Support

11.1 Documentation Support

11.1.1 Related Documentation

For related documentation, see the following:

- Texas Instruments, *Digital Isolator Design Guide*, application note
- Texas Instruments, *Isolation Glossary*, application note
- Texas Instruments, *How to use isolation to improve ESD, EFT, and Surge immunity in industrial systems*, application note
- Texas Instruments, *TCAN1043xx-Q1 Low-Power Fault Protected CAN Transceiver with CAN FD and Wake*, data sheet
- Texas Instruments, *TMS570LS0714 16- and 32-Bit RISC Flash Microcontroller*, data sheet

11.2 Receiving Notification of Documentation Updates

To receive notification of documentation updates, navigate to the device product folder on ti.com. In the upper right corner, click on *Alert me* to register and receive a weekly digest of any product information that has changed. For change details, review the revision history included in any revised document.

11.3 Support Resources

TI E2E™ support forums are an engineer's go-to source for fast, verified answers and design help — straight from the experts. Search existing answers or ask your own question to get the quick design help you need.

Linked content is provided "AS IS" by the respective contributors. They do not constitute TI specifications and do not necessarily reflect TI's views; see TI's Terms of Use.

11.4 Trademarks

TI E2E™ is a trademark of Texas Instruments.
All trademarks are the property of their respective owners.

11.5 Electrostatic Discharge Caution

This integrated circuit can be damaged by ESD. Texas Instruments recommends that all integrated circuits be handled with appropriate precautions. Failure to observe proper handling and installation procedures can cause damage.

ESD damage can range from subtle performance degradation to complete device failure. Precision integrated circuits may be more susceptible to damage because very small parametric changes could cause the device not to meet its published specifications.

11.6 Glossary

TI Glossary	This glossary lists and explains terms, acronyms, and definitions.

12 Revision History

NOTE: Page numbers for previous revisions may differ from page numbers in the current version.

Changes from Revision B (October 2020) to Revision C (February 2024)	Page
• Changed standard name from "DIN V VDE V 0884-11:2017-01" to "DIN EN IEC 60747-17 (VDE 0884-17)" throughout the document	1
• Changed "CSA, CQC, and TUV certifications" to " IEC 61010-1, IEC 62368-1, IEC 60601-1, and GB 4943.1 certifications"	1
• Removed standard revision and year references from all standard names thoughout the document	1
• Updated the numbering format for tables, figures, and cross-references throughout document	2
• Added Maximum impulse voltage (VIMP) specification per DIN EN IEC 60747-17 (VDE 0884-17)	7
• Changed test conditions and values in Maximum surge isolation (V_{IOSM}) specification per DIN EN IEC 60747-17 (VDE 0884-17)	7
• Added clarification for method b test conditions for the Apparent charge (q_{pd})	7
• Removed references to standard IEC/EN/CSA 60950-1 throughout the document	8
• Changed working voltage lifetime margin from 87.5% to 50%, minimum required insulation lifetime from 37.5 years to 30 years, and insulation lifetime per TDDB from 135 years to 169 years per DIN EN IEC 60747-17 (VDE 0884-17)	24
• Changed Figure 8-7 figure per DIN EN IEC 60747-17 (VDE 0884-17)	24
• Deleted *Community Support* section and added *Support Resources*, *Electrostatic Discharge Caution*, and *Glossary* sections	27

Changes from Revision A (November 2019) to Revision B (October 2020)	Page
• Added Functional Safety Bullets in Section 1	1

Changes from Revision * (September 2019) to Revision A (November 2019)	Page
• Changed device status to production data	1

13 Mechanical, Packaging, and Orderable Information

The following pages include mechanical packaging and orderable information. This information is the most current data available for the designated devices. This data is subject to change without notice and revision of this document. For browser-based versions of this data sheet, refer to the left-hand navigation.

Copyright © 2024 Texas Instruments Incorporated

PACKAGING INFORMATION

Orderable part number	Status (1)	Material type (2)	Package | Pins	Package qty | Carrier	RoHS (3)	Lead finish/ Ball material (4)	MSL rating/ Peak reflow (5)	Op temp (°C)	Part marking (6)
ISO7741EDWRQ1	Active	Production	SOIC (DW) | 16	2000 | LARGE T&R	Yes	NIPDAU	Level-2-260C-1 YEAR	-40 to 150	ISO7741E
ISO7741EDWRQ1.B	Active	Production	SOIC (DW) | 16	2000 | LARGE T&R	Yes	NIPDAU	Level-2-260C-1 YEAR	-40 to 150	ISO7741E
ISO7741FEDWRQ1	Active	Production	SOIC (DW) | 16	2000 | LARGE T&R	Yes	NIPDAU	Level-2-260C-1 YEAR	-40 to 150	ISO7741FE
ISO7741FEDWRQ1.B	Active	Production	SOIC (DW) | 16	2000 | LARGE T&R	Yes	NIPDAU	Level-2-260C-1 YEAR	-40 to 150	ISO7741FE

(1) **Status:** For more details on status, see our product life cycle.

(2) **Material type:** When designated, preproduction parts are prototypes/experimental devices, and are not yet approved or released for full production. Testing and final process, including without limitation quality assurance, reliability performance testing, and/or process qualification, may not yet be complete, and this item is subject to further changes or possible discontinuation. If available for ordering, purchases will be subject to an additional waiver at checkout, and are intended for early internal evaluation purposes only. These items are sold without warranties of any kind.

(3) **RoHS values:** Yes, No, RoHS Exempt. See the TI RoHS Statement for additional information and value definition.

(4) **Lead finish/Ball material:** Parts may have multiple material finish options. Finish options are separated by a vertical ruled line. Lead finish/Ball material values may wrap to two lines if the finish value exceeds the maximum column width.

(5) **MSL rating/Peak reflow:** The moisture sensitivity level ratings and peak solder (reflow) temperatures. In the event that a part has multiple moisture sensitivity ratings, only the lowest level per JEDEC standards is shown. Refer to the shipping label for the actual reflow temperature that will be used to mount the part to the printed circuit board.

(6) **Part marking:** There may be an additional marking, which relates to the logo, the lot trace code information, or the environmental category of the part.

Multiple part markings will be inside parentheses. Only one part marking contained in parentheses and separated by a "~" will appear on a part. If a line is indented then it is a continuation of the previous line and the two combined represent the entire part marking for that device.

Important Information and Disclaimer: The information provided on this page represents TI's knowledge and belief as of the date that it is provided. TI bases its knowledge and belief on information provided by third parties, and makes no representation or warranty as to the accuracy of such information. Efforts are underway to better integrate information from third parties. TI has taken and continues to take reasonable steps to provide representative and accurate information but may not have conducted destructive testing or chemical analysis on incoming materials and chemicals. TI and TI suppliers consider certain information to be proprietary, and thus CAS numbers and other limited information may not be available for release.

In no event shall TI's liability arising out of such information exceed the total purchase price of the TI part(s) at issue in this document sold by TI to Customer on an annual basis.

TAPE AND REEL INFORMATION

REEL DIMENSIONS

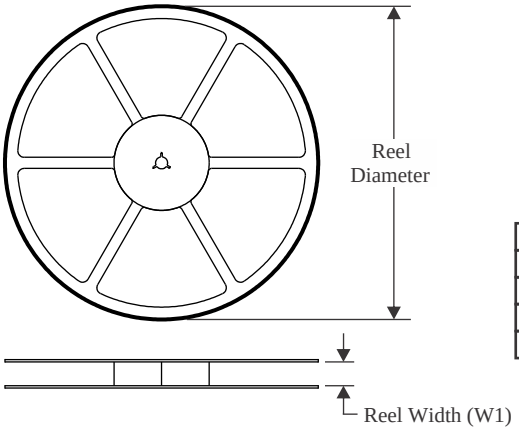

TAPE DIMENSIONS

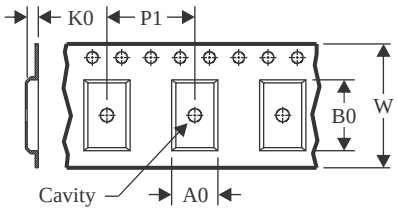

A0	Dimension designed to accommodate the component width
B0	Dimension designed to accommodate the component length
K0	Dimension designed to accommodate the component thickness
W	Overall width of the carrier tape
P1	Pitch between successive cavity centers

QUADRANT ASSIGNMENTS FOR PIN 1 ORIENTATION IN TAPE

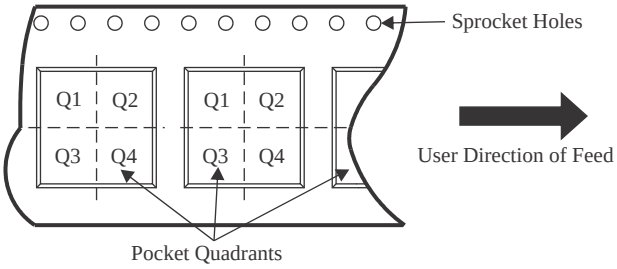

*All dimensions are nominal

Device	Package Type	Package Drawing	Pins	SPQ	Reel Diameter (mm)	Reel Width W1 (mm)	A0 (mm)	B0 (mm)	K0 (mm)	P1 (mm)	W (mm)	Pin1 Quadrant
ISO7741EDWRQ1	SOIC	DW	16	2000	330.0	16.4	10.75	10.7	2.7	12.0	16.0	Q1
ISO7741FEDWRQ1	SOIC	DW	16	2000	330.0	16.4	10.75	10.7	2.7	12.0	16.0	Q1

TAPE AND REEL BOX DIMENSIONS

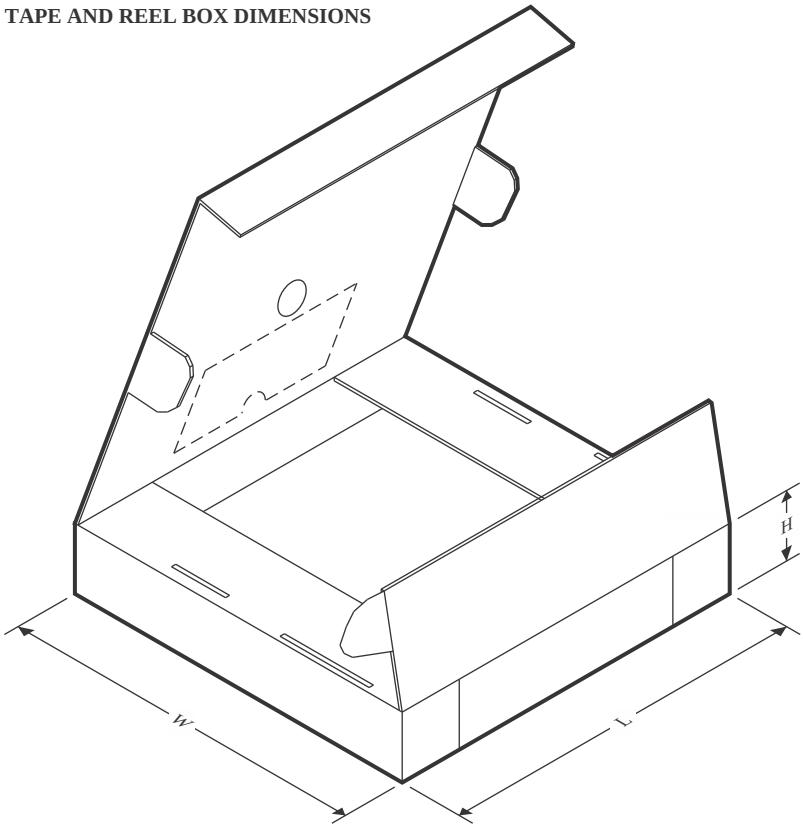

*All dimensions are nominal

Device	Package Type	Package Drawing	Pins	SPQ	Length (mm)	Width (mm)	Height (mm)
ISO7741EDWRQ1	SOIC	DW	16	2000	356.0	356.0	35.0
ISO7741FEDWRQ1	SOIC	DW	16	2000	356.0	356.0	35.0

GENERIC PACKAGE VIEW

DW 16

SOIC - 2.65 mm max height

7.5 x 10.3, 1.27 mm pitch

SMALL OUTLINE INTEGRATED CIRCUIT

This image is a representation of the package family, actual package may vary.
Refer to the product data sheet for package details.

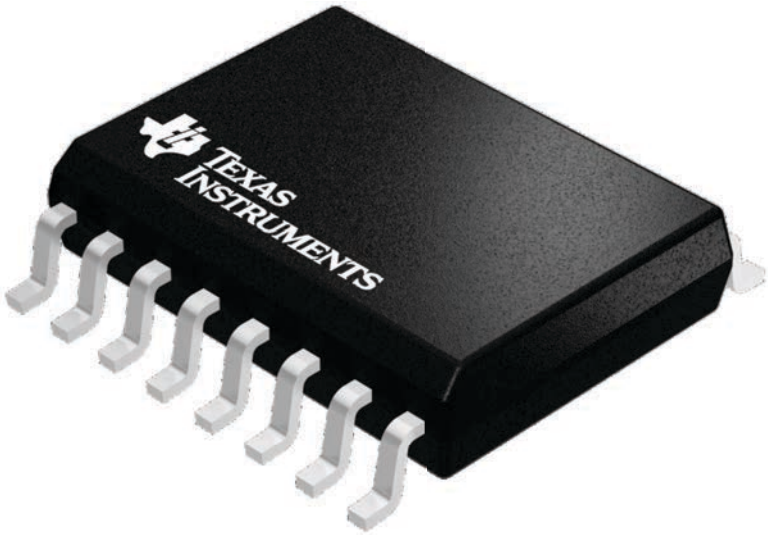

4224780/A

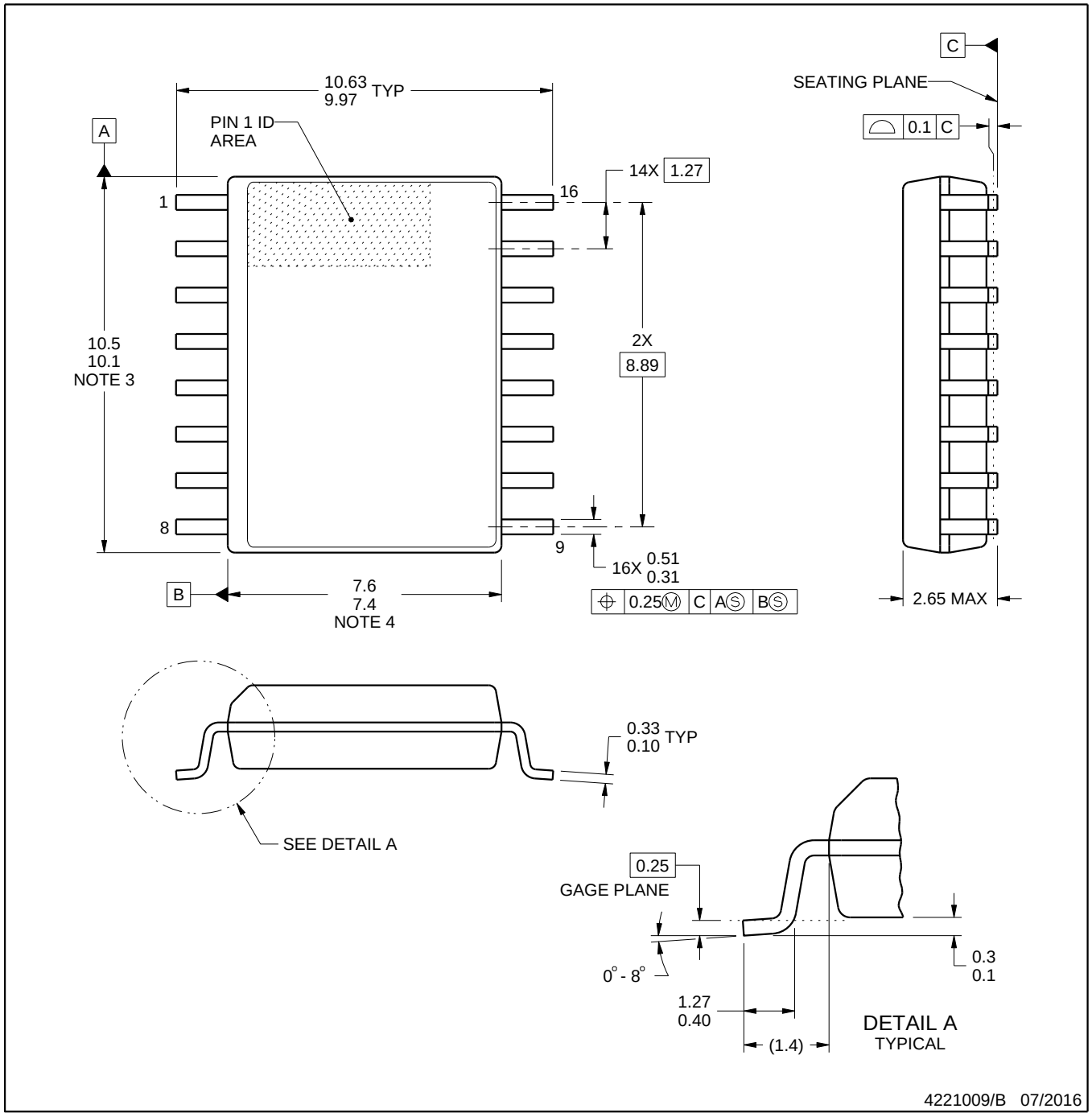

NOTES:

1. All linear dimensions are in millimeters. Dimensions in parenthesis are for reference only. Dimensioning and tolerancing per ASME Y14.5M.
2. This drawing is subject to change without notice.
3. This dimension does not include mold flash, protrusions, or gate burrs. Mold flash, protrusions, or gate burrs shall not exceed 0.15 mm, per side.
4. This dimension does not include interlead flash. Interlead flash shall not exceed 0.25 mm, per side.
5. Reference JEDEC registration MS-013.

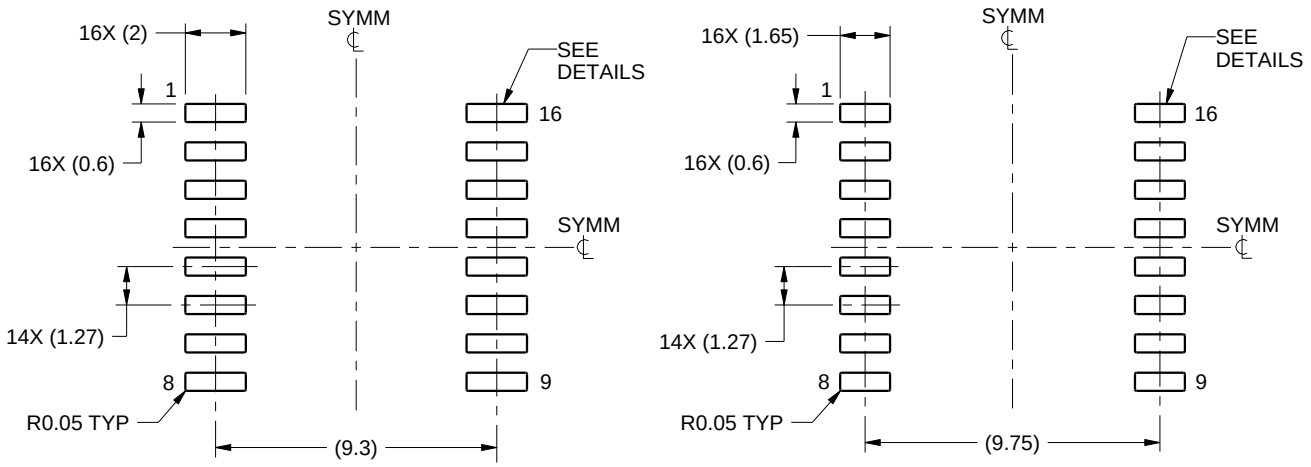

IPC-7351 NOMINAL
7.3 mm CLEARANCE/CREEPAGE

HV / ISOLATION OPTION
8.1 mm CLEARANCE/CREEPAGE

LAND PATTERN EXAMPLE
SCALE:4X

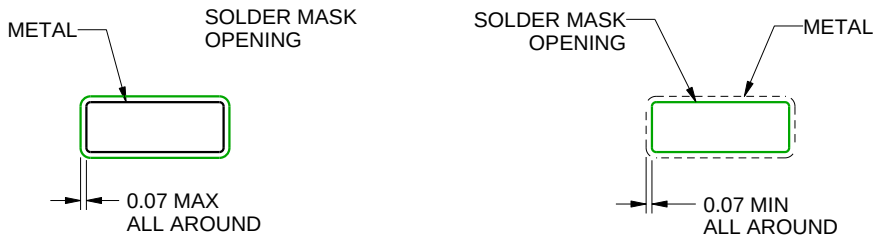

NON SOLDER MASK DEFINED

SOLDER MASK DEFINED

SOLDER MASK DETAILS

4221009/B 07/2016

NOTES: (continued)

6. Publication IPC-7351 may have alternate designs.
7. Solder mask tolerances between and around signal pads can vary based on board fabrication site.

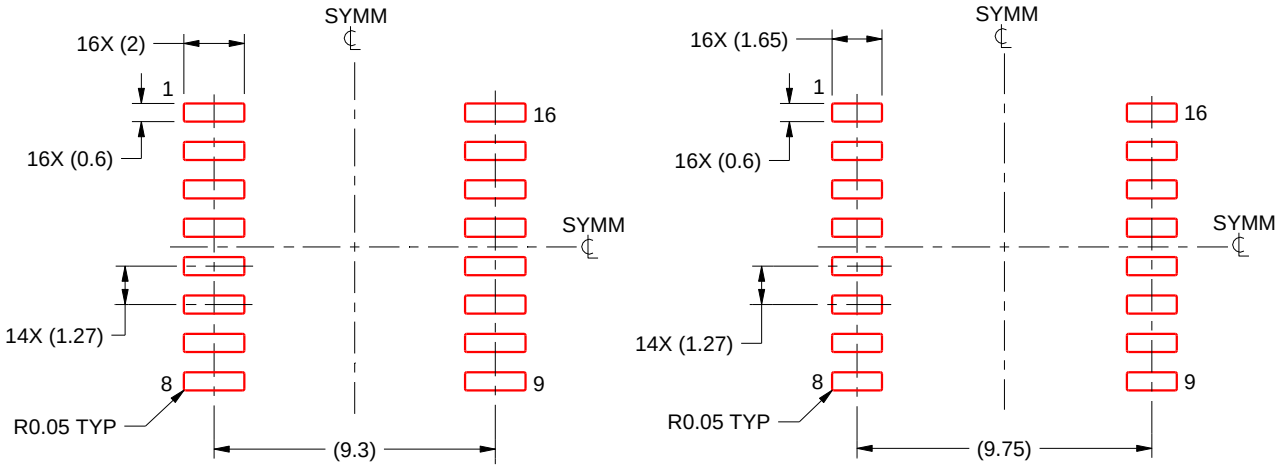

IPC-7351 NOMINAL
7.3 mm CLEARANCE/CREEPAGE

HV / ISOLATION OPTION
8.1 mm CLEARANCE/CREEPAGE

SOLDER PASTE EXAMPLE
BASED ON 0.125 mm THICK STENCIL
SCALE:4X

4221009/B 07/2016

NOTES: (continued)

8. Laser cutting apertures with trapezoidal walls and rounded corners may offer better paste release. IPC-7525 may have alternate design recommendations.
9. Board assembly site may have different recommendations for stencil design.

IMPORTANT NOTICE AND DISCLAIMER

TI PROVIDES TECHNICAL AND RELIABILITY DATA (INCLUDING DATA SHEETS), DESIGN RESOURCES (INCLUDING REFERENCE DESIGNS), APPLICATION OR OTHER DESIGN ADVICE, WEB TOOLS, SAFETY INFORMATION, AND OTHER RESOURCES “AS IS” AND WITH ALL FAULTS, AND DISCLAIMS ALL WARRANTIES, EXPRESS AND IMPLIED, INCLUDING WITHOUT LIMITATION ANY IMPLIED WARRANTIES OF MERCHANTABILITY, FITNESS FOR A PARTICULAR PURPOSE OR NON-INFRINGEMENT OF THIRD PARTY INTELLECTUAL PROPERTY RIGHTS.

These resources are intended for skilled developers designing with TI products. You are solely responsible for (1) selecting the appropriate TI products for your application, (2) designing, validating and testing your application, and (3) ensuring your application meets applicable standards, and any other safety, security, regulatory or other requirements.

These resources are subject to change without notice. TI grants you permission to use these resources only for development of an application that uses the TI products described in the resource. Other reproduction and display of these resources is prohibited. No license is granted to any other TI intellectual property right or to any third party intellectual property right. TI disclaims responsibility for, and you will fully indemnify TI and its representatives against, any claims, damages, costs, losses, and liabilities arising out of your use of these resources.

TI’s products are provided subject to TI’s Terms of Sale or other applicable terms available either on ti.com or provided in conjunction with such TI products. TI’s provision of these resources does not expand or otherwise alter TI’s applicable warranties or warranty disclaimers for TI products.

TI objects to and rejects any additional or different terms you may have proposed.

Mailing Address: Texas Instruments, Post Office Box 655303, Dallas, Texas 75265
Copyright © 2025, Texas Instruments Incorporated