THS4532 Ultra Low Power, Rail-to-Rail Output, Fully-Differential Amplifier

1 Features

- Ultra Low Power:
  - Voltage: 2.5 V to 5.5 V
  - Current: 250 µA
  - Power-Down Mode: 0.5 µA (typ)
- Fully-Differential Architecture
- Bandwidth: 36 MHz
- Slew Rate: 200 V/µs
- THD: –120 dBc at 1 kHz (1 V_{RMS}, R_L= 2 kΩ)
- Input Voltage Noise: 10 nV/√Hz (f = 1 kHz)
- High DC Accuracy:
  - V_{OS}: ±100 µV
  - V_{OS} Drift: ±3 µV/˚C (–40°C to +125°C)
  - A_{OL}: 114 dB
- Rail-to-Rail Output (RRO)
- Negative Rail Input (NRI)
- Output Common-Mode Control

2 Applications

- Low-Power SAR, ΔΣ ADC Driver
- Low Power, High Performance:
  - Differential to Differential Amplifier
  - Single-Ended to Differential Amplifier
- Low-Power, Wide-Bandwidth Differential Driver
- Low-Power, Wide-Bandwidth Differential Signal Conditioning
- High Channel Count and Power Dense Systems

3 Description

The THS4532 is a low-power, fully-differential amplifier with input common-mode range below the negative rail and rail-to-rail output. The device is designed for low-power data acquisition systems and high density applications where power consumption and dissipation is critical.

The device features accurate output common-mode control that allows for dc coupling when driving analog-to-digital converters (ADCs). This control, coupled with the input common-mode range below the negative rail and rail-to-rail output, allows for easy interface from single-ended ground-referenced signal sources to successive-approximation registers (SARs), and delta-sigma (ΔΣ) ADCs using only single-supply 2.5-V to 5-V power. The THS4532 is also a valuable tool for general-purpose, low-power differential signal conditioning applications.

The device is characterized for operation over the extended industrial temperature range from –40°C to 125°C. The following package options are available:

Device Information(1)

PART NUMBER	PACKAGE	BODY SIZE (NOM)
THS4532	TSSOP	5.00 mm x 4.40 mm

(1) For all available packages, see the orderable addendum at the end of the datasheet.

1-kHz FFT Plot on Audio Analyzer

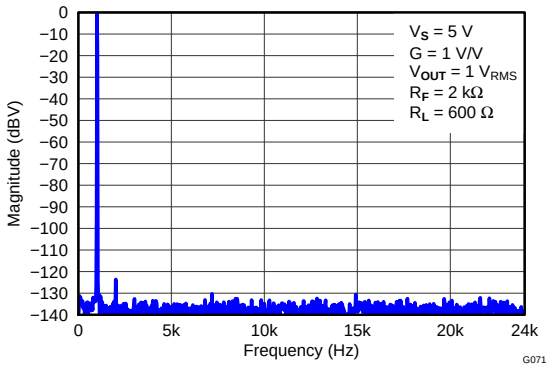

An IMPORTANT NOTICE at the end of this data sheet addresses availability, warranty, changes, use in safety-critical applications, intellectual property matters and other important disclaimers. PRODUCTION DATA.

Table of Contents

1 Features ... 1
2 Applications ... 1
3 Description ... 1
4 Revision History ... 2
5 Related Products ... 3
6 Pin Configuration and Functions ... 4
7 Specifications ... 5
7.1 Absolute Maximum Ratings ... 5
7.2 ESD Ratings ... 5
7.3 Recommended Operating Conditions ... 5
7.4 Thermal Information ... 5
7.5 Electrical Characteristics: V_S = 2.7 V ... 6
7.6 Electrical Characteristics: V_S = 5 V ... 9
7.7 Typical Characteristics ... 12
8 Detailed Description ... 25
8.1 Overview ... 25
8.2 Functional Block Diagram ... 25
8.3 Feature Description ... 25
8.4 Device Functional Modes ... 28
9 Application and Implementation ... 29
9.1 Application Information ... 29
9.2 Typical Applications ... 37
9.3 Systems Examples ... 41
10 Power Supply Recommendations ... 47
11 Layout ... 48
11.1 Layout Guidelines ... 48
11.2 Layout Example ... 49
12 Device and Documentation Support ... 53
12.1 Documentation Support ... 53
12.2 Community Resources ... 53
12.3 Trademarks ... 53
12.4 Electrostatic Discharge Caution ... 53
12.5 Glossary ... 53
13 Mechanical, Packaging, and Orderable Information ... 53

4 Revision History

NOTE: Page numbers for previous revisions may differ from page numbers in the current version.

Changes from Original (February 2013) to Revision A	Page
• Added the *ESD Ratings* table, *Recommended Operating Conditions*, *Detailed Description* section, *Feature Description* section, *Device Functional Modes* section, *Application and Implementation* section. *Power Supply Recommendations* section, *Layout* section, *Device and Documentation Support* section, *Mechanical, Packaging, and Orderable Information* section	1
• Changed V_{OCM} = open To: V_{OCM} = +V_S/2 in the test conditions of *Electrical Characteristics: V_S = 2.7 V*	6
• Added Note 3 to the *Electrical Characteristics: V_S = 2.7 V* table.	7
• Changed V_{OCM} = open To: V_{OCM} = +V_S/2 in the test conditions of *Electrical Characteristics: V_S = 5 V*	9
• Changed *Typical Characteristics: V_S = 2.7 V* Conditions deleted text "Channel 1"	13
• Changed *Typical Characteristics: V_S = 5 V* Conditions deleted text "Channel 1"	19

Copyright © 2013–2015, Texas Instruments Incorporated

5 Related Products

Table 1. Related Amplifiers

DEVICE	BW (MHz)	I_Q (mA)	THD (dBc) at 100 kHz	V_N (nV/√Hz)	RAIL-TO-RAIL	DUAL PART NUMBERS
THS4531	36	0.25	–104	10	Negative In, Out	THS4532
THS4121	100	16	–79	5.4	Out	
THS4521	145	1.14	–120	4.6	Negative In, Out	THS4522
THS4131	150	16	–107	1.3	No	
THS4520	620	14.2	–107	2	Out	
THS4541	850	10.1	–137	2.2	Negative In, Out	

Table 2. Related Precision ADCs

DEVICE	BITS	MAX DATA RATE (kSPS)	NOMINAL SUPPLY (V)	NOMINAL I_{CC} (mA) MAX CLK RATE	TYPICAL POWER (mW) MAX CLK RATE
ADS8881	18	1000	5	1.1	5.5
ADS8861	16	1000	3.3	1.67	5.3
ADS8321E	16	100	5	0.9	4.5
ADS7945	14	2000	5	2.32	5.8/ch (dual)
ADS7044	12	1000	3	0.3	0.9

Copyright © 2013–2015, Texas Instruments Incorporated

6 Pin Configuration and Functions

PW Package
16-Pin TSSOP
Top View

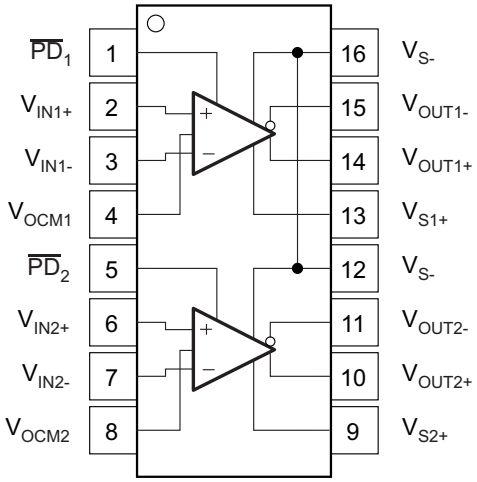

Pin Functions

PIN		I/O	DESCRIPTION
NAME	NO.		
$\overline{PD}_1$	1	—	Power-down 1, $\overline{PD}$ = logic low = low power mode, $\overline{PD}$ = logic high = normal operation **(PIN MUST BE DRIVEN)**
$\overline{PD}_2$	5	—	Amplifier 2 Power-down, $\overline{PD}$ = logic low = low power mode, $\overline{PD}$ = logic high = normal operation **(PIN MUST BE DRIVEN)**
V_{IN1+}	2	I	Noninverting amplifier 1 input
V_{IN1-}	3	I	Inverting amplifier 1 input
V_{IN2+}	6	I	Noninverting amplifier 2 input
V_{IN2-}	7	I	Inverting amplifier 2 input
V_{OCM1}	4	I	Common-mode voltage input 1
V_{OCM2}	8	I	Common-mode voltage input 2
V_{OUT1+}	14	O	Noninverting amplifier 1 output
V_{OUT1-}	15	O	Inverting amplifier 1 output
V_{OUT2+}	10	O	Noninverting amplifier 2 output
V_{OUT2-}	11	O	Inverting amplifier 2 output
V_{S-}	12, 16	I	Negative power-supply input. Note V_{S-} tied together on multichannel devices
V_{S1+}	13	I	Amplifier 1 positive power-supply input
V_{S2+}	9	I	Amplifier 2 positive power-supply input

Copyright © 2013–2015, Texas Instruments Incorporated

7 Specifications

7.1 Absolute Maximum Ratings[1]

	MIN	MAX	UNIT
Supply voltage, V_{S-} to V_{S+}		5.5	V
Input/output voltage, $V_{IN\pm}$, $V_{OUT\pm}$, and V_{OCM} pins	(V_{S-}) – 0.7	(V_{S+}) + 0.7	V
Differential input voltage, V_{ID}		1	V
Continuous output current, I_O		50	mA
Continuous input current, I_i		0.75	mA
Continuous power dissipation	See *Thermal Information*		
Maximum junction temperature, T_J		150	°C
Operating junction temperature, T_J	–40	125	°C
Storage temperature, T_{stg}	–65	150	°C

(1) Stresses beyond those listed under *Absolute Maximum Ratings* may cause permanent damage to the device. These are stress ratings only, which do not imply functional operation of the device at these or any other conditions beyond those indicated under *Recommended Operating Conditions*. Exposure to absolute-maximum-rated conditions for extended periods may affect device reliability.

7.2 ESD Ratings

		VALUE	UNIT
$V_{(ESD)}$ Electrostatic discharge	Human-body model (HBM), per ANSI/ESDA/JEDEC JS-001[1]	±2500	V
	Charged-device model (CDM), per JEDEC specification JESD22-C101[2]	±500	

(1) JEDEC document JEP155 states that 500-V HBM allows safe manufacturing with a standard ESD control process.
(2) JEDEC document JEP157 states that 250-V CDM allows safe manufacturing with a standard ESD control process.

7.3 Recommended Operating Conditions

over operating free-air temperature range (unless otherwise noted)

		MIN	NOM	MAX	UNIT
V_{S+}	Single-supply voltage	2.7	5	5.4	V
T_A	Ambient temperature	–40	25	125	°C

7.4 Thermal Information

THERMAL METRIC[1]		THS4532 TSSOP (PW) 16 PINS	UNIT
$R_{\theta JA}$	Junction-to-ambient thermal resistance	122.4	°C/W
$R_{\theta JC(top)}$	Junction-to-case (top) thermal resistance	61.2	
$R_{\theta JB}$	Junction-to-board thermal resistance	66.7	
ψ_{JT}	Junction-to-top characterization parameter	14.4	
ψ_{JB}	Junction-to-board characterization parameter	66.2	
$R_{\theta JC(bot)}$	Junction-to-case (bottom) thermal resistance	N/A	

(1) For more information about traditional and new thermal metrics, see the *Semiconductor and IC Package Thermal Metrics* application report, SPRA953.

7.5 Electrical Characteristics: V_S = 2.7 V

Test conditions at T_A = 25°C, V_{S+} = 2.7 V, V_{S-} = 0 V, V_{OCM} = +V_S/2, V_{OUT} = 2 V_{PP}, R_F = 2 kΩ, R_L = 2 kΩ differential, G = 1 V/V, single-ended input, differential output, and input and output referenced to mid-supply, unless otherwise noted.

PARAMETER	TEST CONDITIONS	MIN	TYP	MAX	UNIT	TEST LEVEL (1)
AC PERFORMANCE						
Small-signal bandwidth	V_{OUT} = 100 mV_{PP}, G = 1		34		MHz	C
	V_{OUT} = 100 mV_{PP}, G = 2		16			
	V_{OUT} = 100 mV_{PP}, G = 5		6			
	V_{OUT} = 100 mV_{PP}, G = 10		2.7			
Gain-bandwidth product	V_{OUT} = 100 mV_{PP}, G = 10		27		MHz	
Large-signal bandwidth	V_{OUT} = 2 V_{PP}, G = 1		34		MHz	
Bandwidth for 0.1-dB flatness	V_{OUT} = 2 V_{PP}, G = 1		12		MHz	
Slew rate, rise/fall, 25% to 75%	V_{OUT} = 2-V step		190/320		V/µs	
Rise/fall time, 10% to 90%			5.2/6.1		ns	
Settling time to 1%, rise/fall			25/20		ns	
Settling time to 0.1%, rise/fall			60/60			
Settling time to 0.01%, rise/fall			150/110		ns	
Overshoot/undershoot, rise/fall			1/1%			
2nd-order harmonic distortion	f = 1 kHz, V_{OUT} = 1 V_{RMS}		–122		dBc	
	f = 10 kHz		–127			
	f = 1 MHz		–59			
3rd-order harmonic distortion	f = 1 kHz, V_{OUT} = 1 V_{RMS}		–130		dBc	
	f = 10 kHz		–135			
	f = 1 MHz		–70			
2nd-order intermodulation distortion	f = 1 MHz, 200-kHz tone spacing, V_{OUT} envelope = 2 V_{PP}		–83		dBc	
3rd-order intermodulation distortion			–81			
Input voltage noise	f = 1 kHz		10		nV/√Hz	
Voltage noise 1/f corner frequency			45		Hz	
Input current noise	f = 100 kHz		0.25		pA/√Hz	
Current noise 1/f corner frequency			6.5		kHz	
Overdrive recovery time	Overdrive = 0.5 V		65		ns	
Output balance error	V_{OUT} = 100 mV, f = 1 MHz		–65		dB	
Closed-loop output impedance	f = 1 MHz (differential)		2.5		Ω	
Channel-to-channel crosstalk	f = 10 kHz, measured differentially		-133		dB	

(1) Test levels (all values set by characterization and simulation): (A) 100% tested at +25°C; over temperature limits by characterization and simulation. (B) Not tested in production; limits set by characterization and simulation. (C) Typical value only for information.

Copyright © 2013–2015, Texas Instruments Incorporated

Electrical Characteristics: V_S = 2.7 V (continued)

Test conditions at T_A = 25°C, V_{S+} = 2.7 V, V_{S-} = 0 V, V_{OCM} = +V_S/2, V_{OUT} = 2 V_{PP}, R_F = 2 kΩ, R_L = 2 kΩ differential, G = 1 V/V, single-ended input, differential output, and input and output referenced to mid-supply, unless otherwise noted.

PARAMETER	TEST CONDITIONS	MIN	TYP	MAX	UNIT	TEST LEVEL(1)
DC PERFORMANCE						
Open-loop voltage gain (A_{OL})		100	113		dB	A
Input-referred offset voltage	T_A = 25°C		±80	±400	µV	A
	T_A = 0°C to 70°C			±715		B
	T_A = –40°C to 85°C			±855		
	T_A = –40°C to 125°C			±1300		
Input offset voltage drift(2)	T_A = 0°C to 70°C		±2	±7	µV/°C	B
	T_A = –40°C to 85°C		±2	±7		
	T_A = –40°C to 125°C		±3	±9		
Input bias current	T_A = 25°C		200	250	nA	A
	T_A = 0°C to 70°C			275		B
	T_A = –40°C to 85°C			286		
	T_A = –40°C to 125°C			305		
Input bias current drift(2)	T_A = 0°C to 70°C		0.45	0.55	nA/°C	B
	T_A = –40°C to 85°C		0.45	0.55		
	T_A = –40°C to 125°C		0.45	0.55		
Input offset current	T_A = 25°C		±5	±50	nA	A
	T_A = 0°C to 70°C			±55		B
	T_A = –40°C to 85°C			±57		
	T_A = –40°C to 125°C			±60		
Input offset current drift(2)	T_A = 0°C to 70°C		±0.03	±0.1	nA/°C	B
	T_A = –40°C to 85°C		±0.03	±0.1		
	T_A = –40°C to 125°C		±0.03	±0.1		
INPUT						
Common-mode input low	T_A = 25°C, CMRR > 87 dB		V_{S-} – 0.2	V_{S-}	V	A
	T_A = –40°C to 125°C, CMRR > 87 dB		V_{S-} – 0.2	V_{S-}		B
Common-mode input high	T_A = 25°C, CMRR > 87 dB	V_{S+} – 1.2	V_{S+} – 1.1		V	A
	T_A = –40°C to 125°C, CMRR > 87 dB	V_{S+} – 1.2	V_{S+} – 1.1			B
Common-mode rejection ratio		90	116		dB	A
Input impedance common-mode			200 || 1.2		kΩ || pF	C
Input impedance differential mode			200 || 1			C
OUTPUT						
Single-ended output voltage: low	T_A = 25°C		V_{S-} + 0.06	V_{S-} + 0.2	V	A
	T_A = –40°C to 125°C		V_{S-} + 0.06	V_{S-} + 0.2		B
Single-ended output voltage: high	T_A = 25°C	V_{S+} – 0.2	V_{S+} – 0.11		V	A
	T_A = –40°C to 125°C	V_{S+} – 0.2	V_{S+} – 0.11			B
Output saturation voltage: high/low			110/60		mV	C
Linear output current drive	T_A = 25°C	±15	±22		mA	A
	T_A = –40°C to 125°C	±15				B

(2) Input offset voltage drift, input bias current drift, and input offset current drift are average values calculated by taking data at the end points, computing the difference, and dividing by the temperature range.

Copyright © 2013–2015, Texas Instruments Incorporated

Electrical Characteristics: V_S = 2.7 V (continued)

Test conditions at T_A = 25°C, V_{S+} = 2.7 V, $V_{S–}$ = 0 V, V_{OCM} = +V_S/2, V_{OUT} = 2 V_{PP}, R_F = 2 kΩ, R_L = 2 kΩ differential, G = 1 V/V, single-ended input, differential output, and input and output referenced to mid-supply, unless otherwise noted.

PARAMETER	TEST CONDITIONS	MIN	TYP	MAX	UNIT	TEST LEVEL (1)
POWER SUPPLY						
Specified operating voltage		2.5		5.5	V	B
Quiescent operating current/ch	T_A = 25°C, $\overline{PD}$ = V_{S+}		230	330	µA	A
	T_A = –40°C to 125°C, $\overline{PD}$ = V_{S+}		270	370		B
Power-supply rejection (PSRR)		87	108		dB	A
POWER DOWN						
Enable voltage threshold	Specified on above 2.1 V			2.1	V	A
Disable voltage threshold	Specified off below 0.7 V	0.7			V	A
Disable pin bias current	$\overline{PD}$ = $V_{S–}$ + 0.5 V		50	500	nA	A
Power-down quiescent current	$\overline{PD}$ = $V_{S–}$ + 0.5 V		0.5	2	µA	A
Turn-on time delay	Time from $\overline{PD}$ = high to V_{OUT} = 90% of final value, R_L= 200 Ω		650		ns	C
Turn-off time delay	Time from $\overline{PD}$ = low to V_{OUT} = 10% of original value, R_L= 200 Ω		20		ns	C
OUTPUT COMMON-MODE VOLTAGE CONTROL (V_{OCM})						
Small-signal bandwidth	V_{OCM} input = 100 mV_{PP}		23		MHz	C
Slew rate	V_{OCM} input = 1 V_{STEP}		14		V/µs	C
Gain		0.99	0.996	1.01	V/V	A
Common-mode offset voltage	Offset = output common-mode voltage – V_{OCM} input voltage		±1	±5	mV	A
V_{OCM} input bias current	V_{OCM} = (V_{S+} – $V_{S–}$)/2		±20	±100	nA	A
V_{OCM} input voltage range		0.8	0.75 to 1.9	1.75	V	A
V_{OCM} input impedance			100 || 1.6		kΩ || pF	C
Default voltage offset from (V_{S+} – $V_{S–}$)/2	Offset = output common-mode voltage – (V_{S+} – $V_{S–}$)/2		±3	±10	mV	A

Copyright © 2013–2015, Texas Instruments Incorporated

7.6 Electrical Characteristics: V_S = 5 V

Test conditions at T_A = +25°C, V_{S+} = 5 V, V_{S-} = 0 V, V_{OCM} = open, V_{OUT} = 2 V_{PP}, R_F = 2 kΩ, R_L = 2 kΩ differential, G = 1 V/V, single-ended input, differential output, and input and output referenced to mid-supply, unless otherwise noted.

PARAMETER	TEST CONDITIONS	MIN	TYP	MAX	UNIT	TEST LEVEL (1)
AC PERFORMANCE						
Small-signal bandwidth	V_{OUT} = 100 mV_{PP}, G = 1		36		MHz	C
	V_{OUT} = 100 mV_{PP}, G = 2		17			
	V_{OUT} = 100 mV_{PP}, G = 5		6			
	V_{OUT} = 100 mV_{PP}, G = 10		2.7			
Gain-bandwidth product	V_{OUT} = 100 mV_{PP}, G = 10		27		MHz	
Large-signal bandwidth	V_{OUT} = 2 V_{PP}, G = 1		36		MHz	
Bandwidth for 0.1-dB flatness	V_{OUT} = 2 V_{PP}, G = 1		15		MHz	
Slew rate, rise/fall, 25% to 75%	V_{OUT} = 2 V_{Step}		220/390		V/µs	
Rise/fall time, 10% to 90%			4.6/5.6		ns	
Settling time to 1%, rise/fall			25/20		ns	
Settling time to 0.1%, rise/fall			60/60		ns	
Settling time to 0.01%, rise/fall			150/110		ns	
Overshoot/undershoot, rise/fall			1/1%			
2nd-order harmonic distortion	f = 1 kHz, V_{OUT} = 1 V_{RMS}		–122		dBc	
	f = 10 kHz		–128			
	f = 1 MHz		–60			
3rd-order harmonic distortion	f = 1 kHz, V_{OUT} = 1 V_{RMS}		–130		dBc	
	f = 10 kHz		–137			
	f = 1 MHz		–71			
2nd-order intermodulation distortion	f = 1 MHz, 200-kHz tone spacing, V_{OUT} envelope = 2 V_{PP}		–85		dBc	
3rd-order intermodulation distortion			–83		dBc	
Input voltage noise	f = 1 kHz		10		nV/√Hz	
Voltage noise 1/f corner frequency			45		Hz	
Input current noise	f = 100 kHz		0.25		pA/√Hz	
Current noise 1/f corner frequency			6.5		kHz	
Overdrive recovery time	Overdrive = 0.5 V		65		ns	
Output balance error	V_{OUT} = 100 mV, f = 1 MHz		–67		dB	
Closed-loop output impedance	f = 1 MHz (differential)		2.5		Ω	
Channel-to-channel crosstalk	f = 10 kHz, measured differentially		-133		dB	

(1) Test levels (all values set by characterization and simulation): (A) 100% tested at +25°C; over temperature limits by characterization and simulation. (B) Not tested in production; limits set by characterization and simulation. (C) Typical value only for information.

Copyright © 2013–2015, Texas Instruments Incorporated

Electrical Characteristics: V_S = 5 V (continued)

Test conditions at T_A = +25°C, V_{S+} = 5 V, V_{S-} = 0 V, V_{OCM} = open, V_{OUT} = 2 V_{PP}, R_F = 2 kΩ, R_L = 2 kΩ differential, G = 1 V/V, single-ended input, differential output, and input and output referenced to mid-supply, unless otherwise noted.

PARAMETER	TEST CONDITIONS	MIN	TYP	MAX	UNIT	TEST LEVEL(1)
DC PERFORMANCE						
Open-loop voltage gain (A_{OL})		100	114		dB	A
Input-referred offset voltage	T_A = 25°C		±80	±400	µV	A
	T_A = 0°C to 70°C			±715		B
	T_A = –40°C to 85°C			±855		
	T_A = –40°C to 125°C			±1300		
Input offset voltage drift(2)	T_A = 0°C to 70°C		±2	±7	µV/°C	B
	T_A = –40°C to 85°C		±2	±7		
	T_A = –40°C to 125°C		±3	±9		
Input bias current	T_A = 25°C		200	250	nA	A
	T_A = 0°C to 70°C			279		B
	T_A = –40°C to 85°C			292		
	T_A = –40°C to 125°C			315		
Input bias current drift(2)	T_A = 0°C to 70°C		0.5	0.65	nA/°C	B
	T_A = –40°C to 85°C		0.5	0.65		
	T_A = –40°C to 125°C		0.5	0.65		
Input offset current	T_A = 25°C		±5	±50	nA	A
	T_A = 0°C to 70°C			±55		B
	T_A = –40°C to 85°C			±57		
	T_A = –40°C to 125°C			±60		
Input offset current drift(2)	T_A = 0°C to 70°C		±0.03	±0.1	nA/°C	B
	T_A = –40°C to 85°C		±0.03	±0.1		
	T_A = –40°C to 125°C		±0.03	±0.1		
INPUT						
Common-mode input: low	T_A = 25°C, CMRR > 87 dB		V_{S-} – 0.2	V_{S-}	V	A
	T_A = –40°C to 125°C, CMRR > 87 dB		V_{S-} – 0.2	V_{S-}		B
Common-mode input: high	T_A = 25°C, CMRR > 87 dB	V_{S+} – 1.2	V_{S+} –1.1		V	A
	T_A = –40°C to 125°C, CMRR > 87 dB	V_{S+} – 1.2	V_{S+} –1.1			B
Common-mode rejection ratio		90	116		dB	A
Input impedance common-mode			200 || 1.2		kΩ || pF	C
Input impedance differential mode			200 || 1			C
OUTPUT						
Linear output voltage: low	T_A = 25°C		V_{S-} + 0.1	V_{S-} + 0.2	V	A
	T_A = –40°C to 125°C		V_{S-} + 0.1	V_{S-} + 0.2	V	B
Linear output voltage: high	T_A = 25°C	V_{S+} – 0.25	V_{S+} – 0.12		V	A
	T_A = –40°C to 125°C	V_{S+} – 0.25	V_{S+} – 0.12		V	B
Output saturation voltage: high/low			120/100		mV	C
Linear output current drive	T_A = 25°C	±15	±25		mA	A
	T_A = –40°C to 125°C	±15				B

(2) Input offset voltage drift, input bias current drift, and input offset current drift are average values calculated by taking data at the end points, computing the difference, and dividing by the temperature range.

Copyright © 2013–2015, Texas Instruments Incorporated

Electrical Characteristics: V_S = 5 V (continued)

Test conditions at T_A = +25°C, V_{S+} = 5 V, V_{S-} = 0 V, V_{OCM} = open, V_{OUT} = 2 V_{PP}, R_F = 2 kΩ, R_L = 2 kΩ differential, G = 1 V/V, single-ended input, differential output, and input and output referenced to mid-supply, unless otherwise noted.

PARAMETER	TEST CONDITIONS	MIN	TYP	MAX	UNIT	TEST LEVEL (1)
POWER SUPPLY						
Specified operating voltage		2.5		5.5	V	B
Quiescent operating current/ch	T_A = 25°C, $\overline{PD}$ = V_{S+}		250	350	µA	A
	T_A = –40°C to 125°C, $\overline{PD}$ = V_{S+}		290	390		B
Power-supply rejection (PSRR)		87	108		dB	A
POWER DOWN						
Enable voltage threshold	Specified on above 2.1 V			2.1	V	A
Disable voltage threshold	Specified off below 0.7 V	0.7			V	A
Disable pin bias current	$\overline{PD}$ = V_{S-} + 0.5 V		50	500	nA	A
Power-down quiescent current	$\overline{PD}$ = V_{S-} + 0.5 V		0.5	2	µA	A
Turn-on time delay	Time from $\overline{PD}$ = high to V_{OUT} = 90% of final value, R_L= 200 Ω		600		ns	C
Turn-off time delay	Time from $\overline{PD}$ = low to V_{OUT} = 10% of original value, R_L= 200 Ω		15		ns	C
OUTPUT COMMON-MODE VOLTAGE CONTROL (V_{OCM})						
Small-signal bandwidth	V_{OCM} input = 100 mV_{PP}		24		MHz	C
Slew rate	V_{OCM} input = 1 V_{STEP}		15		V/µs	C
Gain		0.99	0.996	1.01	V/V	A
Common-mode offset voltage	Offset = output common-mode voltage – V_{OCM} input voltage		±1	±5	mV	A
V_{OCM} input bias current	V_{OCM} = (V_{S+} – V_{S-})/2		±20	±120	nA	A
V_{OCM} input voltage range		0.95	0.75 to 4.15	4.0	V	A
V_{OCM} input impedance			65 || 0.86		kΩ || pF	C
Default voltage offset from (V_{S+} – V_{S-})/2	Offset = output common-mode voltage – (V_{S+} – V_{S-})/2		±3	±10	mV	A

Copyright © 2013–2015, Texas Instruments Incorporated

7.7 Typical Characteristics

Table 3. Table of Graphs

DESCRIPTION	V_S = 2.7 V	V_S = 5 V
Small-signal frequency response	Figure 1	Figure 35
Large-signal frequency response	Figure 2	Figure 36
Large- and small- signal pulse response	Figure 3	Figure 37
Single-ended slew rate vs V_{OUT} step	Figure 4	Figure 38
Differential slew rate vs V_{OUT} step	Figure 5	Figure 39
Overdrive recovery	Figure 6	Figure 40
10-kHz FFT on audio analyzer	Figure 7	Figure 41
Harmonic distortion vs Frequency	Figure 8	Figure 42
Harmonic distortion vs Output voltage at 1 MHz	Figure 9	Figure 43
Harmonic distortion vs Gain at 1 MHz	Figure 10	Figure 44
Harmonic distortion vs Load at 1 MHz	Figure 11	Figure 45
Harmonic distortion vs V_{OCM} at 1 MHz	Figure 12	Figure 46
Two-tone, 2nd and 3rd order intermodulation distortion vs Frequency	Figure 13	Figure 47
Single-ended output voltage swing vs Load resistance	Figure 14	Figure 48
Single-ended output saturation voltage vs Load current	Figure 15	Figure 49
Main amplifier differential output impedance vs Frequency	Figure 16	Figure 50
Frequency response vs C_{LOAD}	Figure 17	Figure 51
R_O vs C_{LOAD}	Figure 18	Figure 52
Rejection ratio vs Frequency	Figure 19	Figure 53
Crosstalk vs Frequency	Figure 20	Figure 54
Turn-on time	Figure 21	Figure 55
Turn-off time	Figure 22	Figure 56
Input-referred voltage noise and current noise spectral density	Figure 23	Figure 57
Main amplifier differential open-loop gain and phase vs Frequency	Figure 24	Figure 58
Output balance error vs Frequency	Figure 25	Figure 59
V_{OCM} small signal frequency response	Figure 26	Figure 60
V_{OCM} large and small signal pulse response	Figure 27	Figure 61
V_{OCM} input impedance vs frequency	Figure 28	Figure 62
Count vs input offset current	Figure 29	Figure 63
Count vs input offset current temperature drift	Figure 30	Figure 64
Input offset current vs temperature	Figure 31	Figure 65
Count vs input offset voltage	Figure 32	Figure 66
Count vs input offset voltage temperature drift	Figure 33	Figure 67
Input offset voltage vs temperature	Figure 34	Figure 68

Copyright © 2013–2015, Texas Instruments Incorporated

7.7.1 Typical Characteristics: V_S = 2.7 V

V_{S+} = 2.7 V, V_{S-} = 0 V, CM = open, V_{OUT} = 2 Vpp, R_F = 2 kΩ, R_L = 2 kΩ Differential, G = 1V/V, Single-Ended Input, Differential Output, Input and Output Referenced to mid-supply unless otherwise noted.

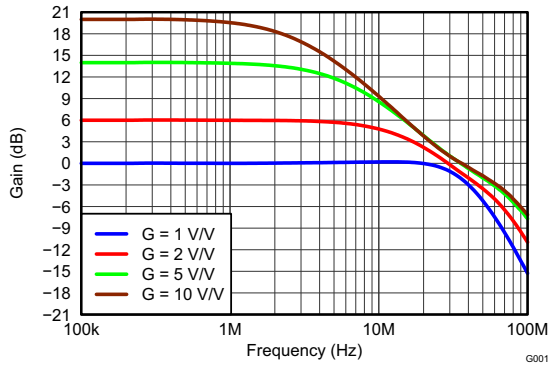

V_S = 2.7 V G = 1 V/V R_F = 2 kΩ
R_L = 2 kΩ V_{OUT} = 100 mV_{PP}

Figure 1. Small-Signal Frequency Response

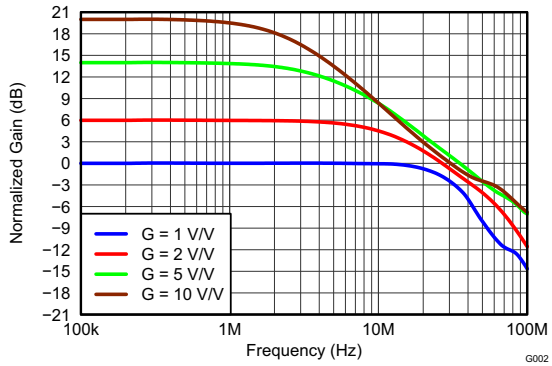

V_S = 2.7 V G = 1 V/V R_F = 2 kΩ
R_L = 2 kΩ V_{OUT} = 20 V_{PP}

Figure 2. Large-Signal Frequency Response

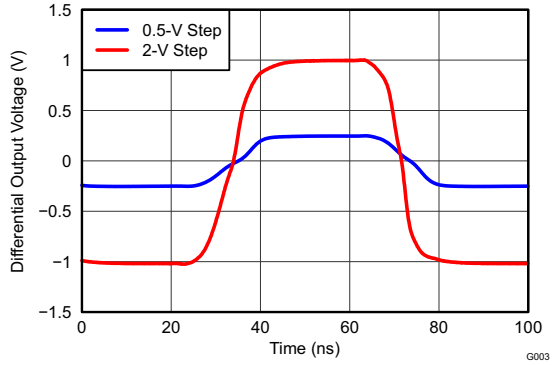

V_S = 2.7 V G = 1 V/V R_F = 2 kΩ
R_L = 2 kΩ

Figure 3. Large- and Small-Signal Pulse Response

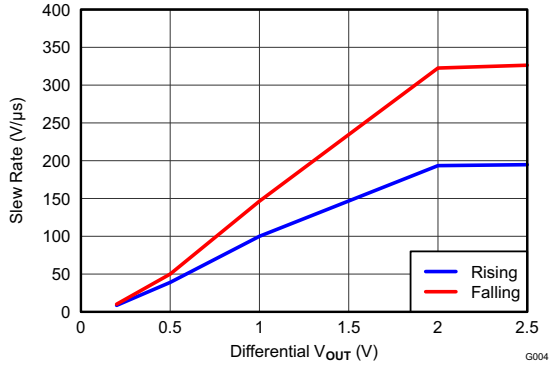

V_S = 2.7 V G = 2 V/V R_F = 2 kΩ
R_L = 200 Ω

Figure 4. Single-Ended Slew Rate vs V_{OUT} Step

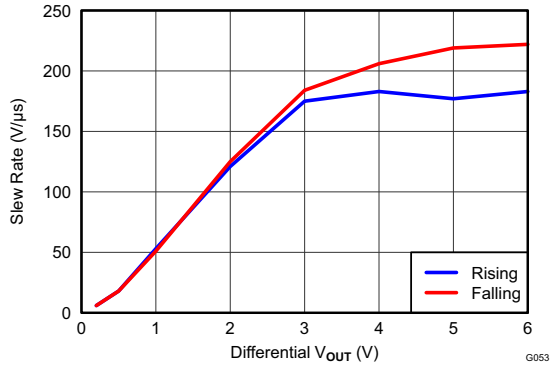

V_S = 2.7 V G = 2 V/V R_F = 2 kΩ
R_L = 200 Ω

Figure 5. Differential Slew Rate vs V_{OUT} Step

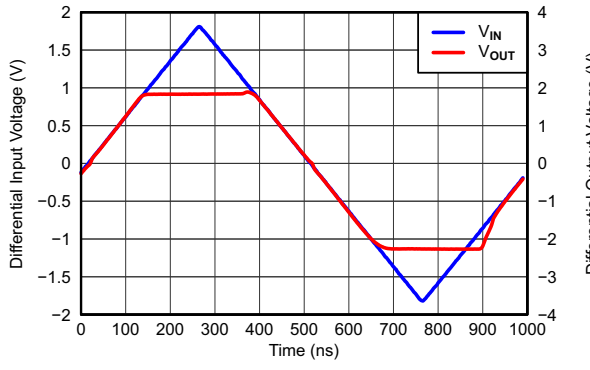

V_S = 2.7 V G = 2 V/V R_F = 2 kΩ
R_L = 2 kΩ

Figure 6. Overdrive Recovery

Typical Characteristics: V_S = 2.7 V (continued)

V_{S+} = 2.7 V, V_{S-} = 0 V, CM = open, V_{OUT} = 2 Vpp, R_F = 2 kΩ, R_L = 2 kΩ Differential, G = 1V/V, Single-Ended Input, Differential Output, Input and Output Referenced to mid-supply unless otherwise noted.

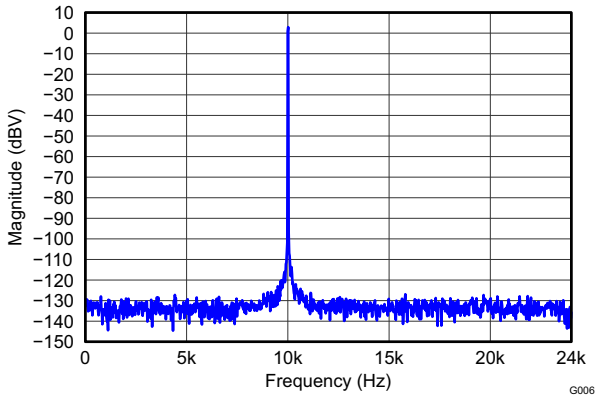

V_S = 2.7 V G = 1 V/V R_F = 2 kΩ
R_L = 100 Ω V_{OUT} = 4 V_{PP}

Figure 7. 10-kHz FFT On Audio Analyzer

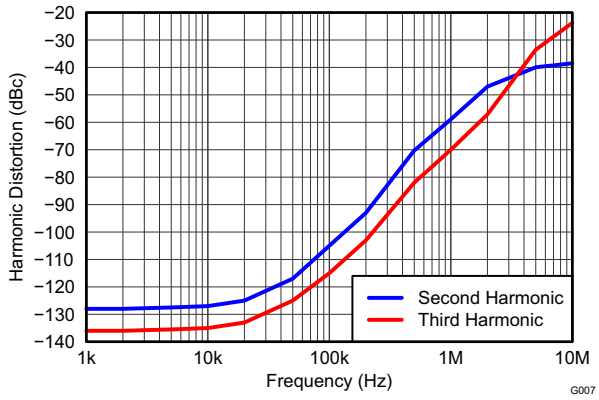

V_S = 2.7 V G = 1 V/V R_F = 2 kΩ
R_L = 2 kΩ V_{OUT} =2 V_{PP}

Figure 8. Harmonic Distortion vs Frequency

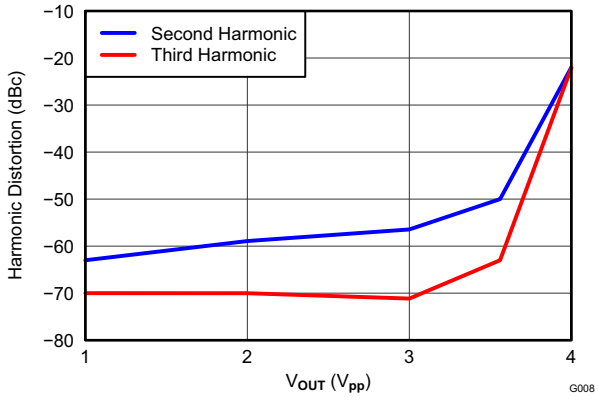

V_S = 2.7 V G = 1 V/V R_F = 2 kΩ
R_L = 2 kΩ f = 1 MHz

Figure 9. Harmonic Distortion vs Output Voltage at 1 MHz

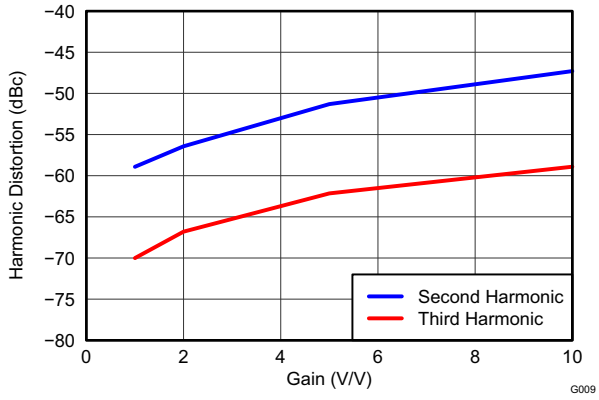

V_S = 2.7 V R_F = 2 kΩ R_L = 2 kΩ
V_{OUT} = 2 V_{PP} f = 1 MHz

Figure 10. Harmonic Distortion vs Gain at 1 MHz

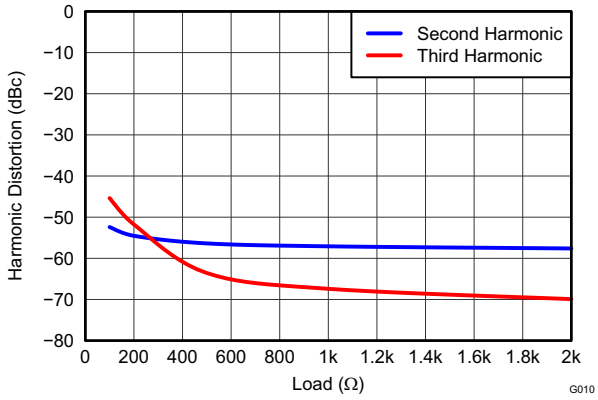

V_S = 2.7 V G = 1 V/V R_F = 2 kΩ
V_{OUT} = 2 V_{PP} f = 1 MHz

Figure 11. Harmonic Distortion vs Load at 1 MHz

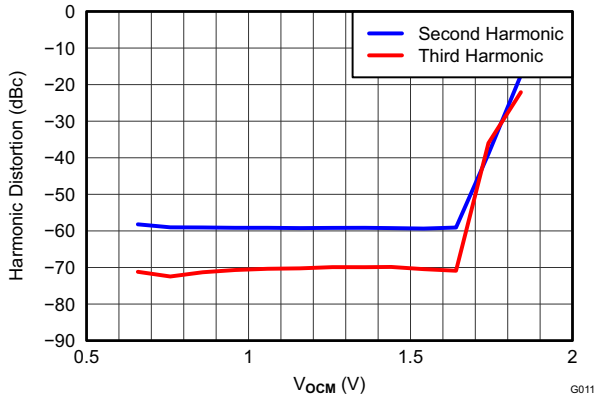

V_S = 2.7 V G = 1 V/V R_F = 2 kΩ
R_L = 2 kΩ V_{OUT} = 2 V_{PP} f = 1 MHz

Figure 12. Harmonic Distortion V_{OCM} at 1 MHz

Copyright © 2013–2015, Texas Instruments Incorporated

Typical Characteristics: V_S = 2.7 V (continued)

V_{S+} = 2.7 V, V_{S-} = 0 V, CM = open, V_{OUT} = 2 Vpp, R_F = 2 kΩ, R_L = 2 kΩ Differential, G = 1V/V, Single-Ended Input, Differential Output, Input and Output Referenced to mid-supply unless otherwise noted.

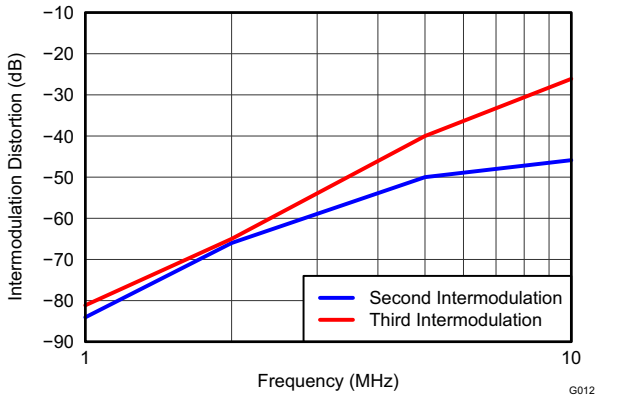

V_S = 2.7 V G = 1 V/V R_F = 2 kΩ
R_L = 2 kΩ V_{OUT} = 2 V_{PP} Envelope

Figure 13. Two-Tone, 2nd and 3rd Order Intermodulation Distortion vs Frequency

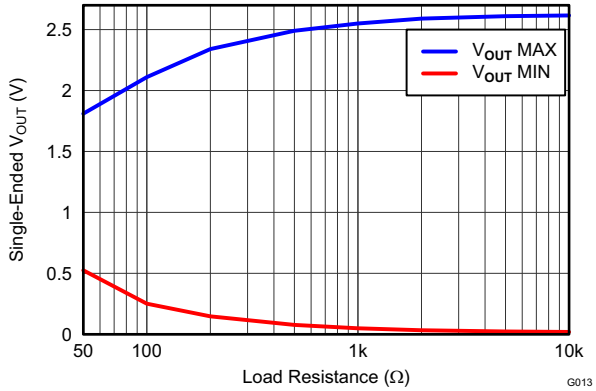

V_S = 2.7 V G = 2 V/V R_F = 2 kΩ

Figure 14. Single-Ended Output Voltage Swing vs Load Resistance

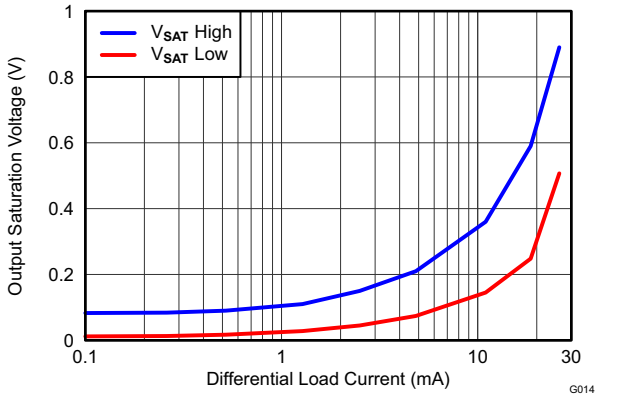

V_S = 2.7 V G = 2 V/V R_F = 2 kΩ

Figure 15. Single-Ended Output Saturation Voltage vs Load Current

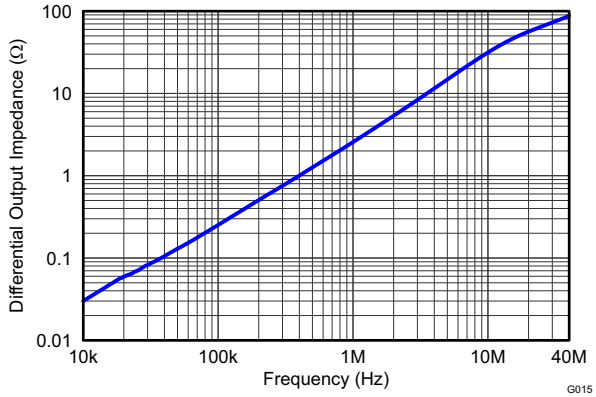

V_S = 2.7 V G = 1 V/V R_F = 2 kΩ
V_{OUT} = 100 mV_{PP}

Figure 16. Main Amplifier Differential Output Impedance vs Frequency

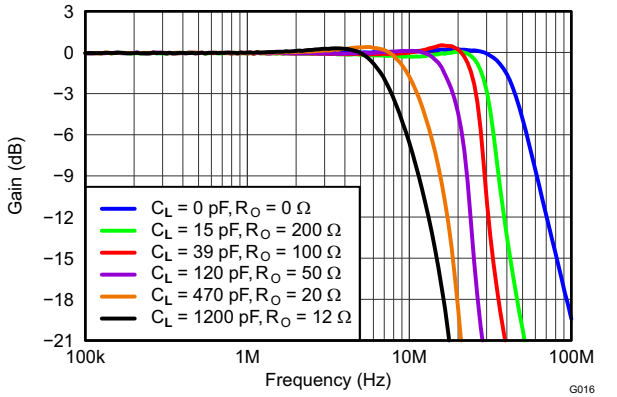

V_S = 2.7 V G = 1 V/V R_F = 2 kΩ
R_L = 2 kΩ V_{OUT} = 100 mV_{PP}

Figure 17. Frequency Response vs C_{LOAD}

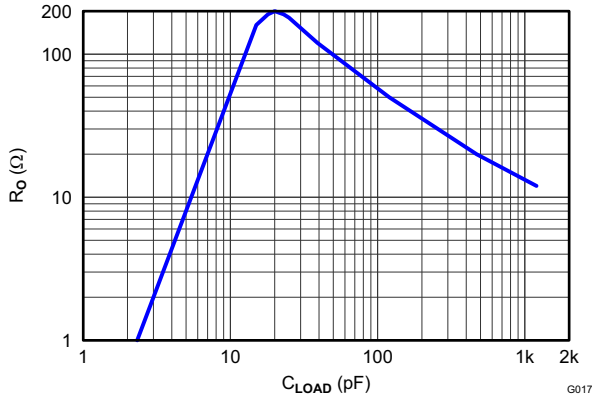

V_S = 2.7 V G = 1 V/V R_F = 2 kΩ
R_L = 2 kΩ

Figure 18. R_O vs C_{LOAD}

Typical Characteristics: V_S = 2.7 V (continued)

V_{S+} = 2.7 V, V_{S-} = 0 V, CM = open, V_{OUT} = 2 Vpp, R_F = 2 kΩ, R_L = 2 kΩ Differential, G = 1V/V, Single-Ended Input, Differential Output, Input and Output Referenced to mid-supply unless otherwise noted.

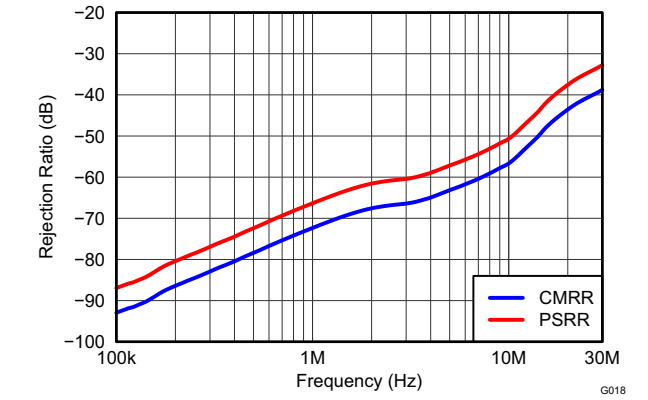

V_S = 2.7 V G = 1 V/V R_F = 2 kΩ
R_L = 2 kΩ

Figure 19. Rejection Ratio vs Frequency

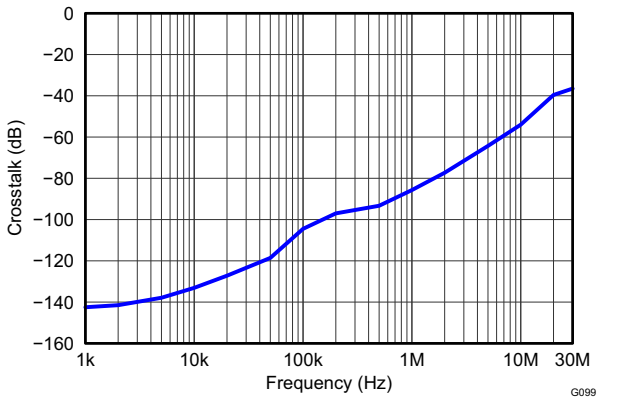

V_S = 2.7 V G = 1 V/V R_F = 2 kΩ
R_L = 2 kΩ V_{OUT} = 2 V_{PP}

Figure 20. Crosstalk vs Frequency

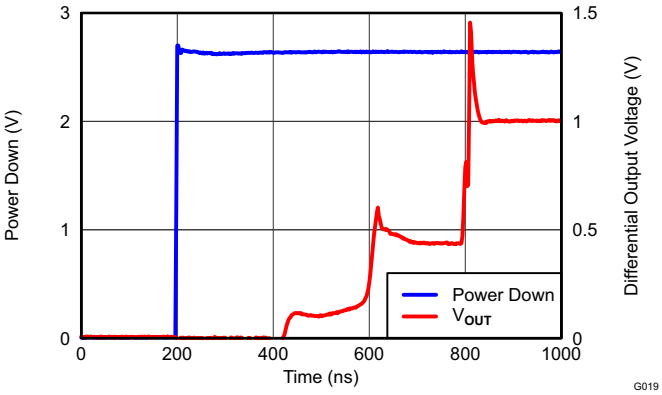

V_S = 2.7 V G = 1 V/V R_F = 2 kΩ
R_L = 200 Ω V_{IN} = 1 V

Figure 21. Turn-On Time

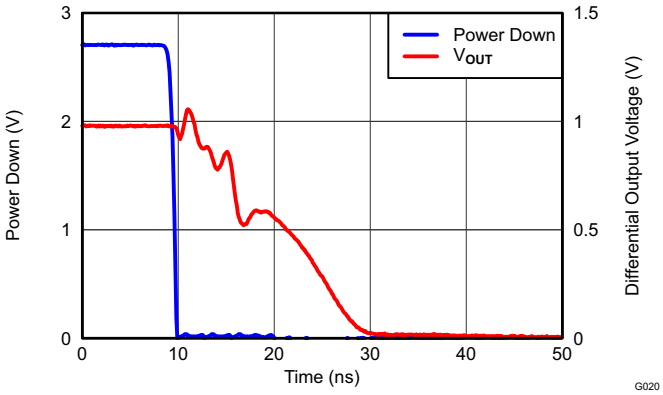

V_S = 2.7 V G = 1 V/V R_F = 2 kΩ
R_L = 200 Ω

Figure 22. Turn-Off Time

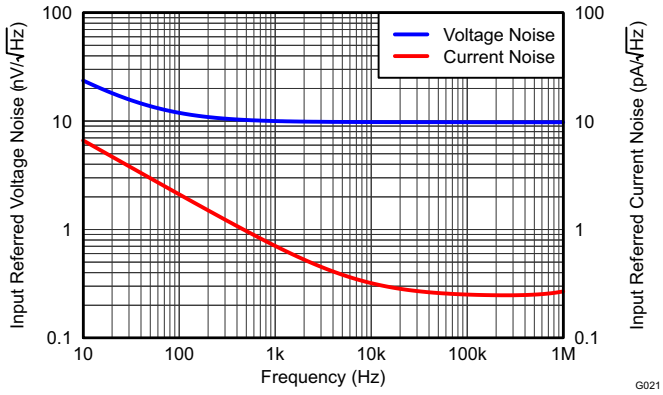

Figure 23. Input-Referred Voltage Noise and Current Noise Spectral Density

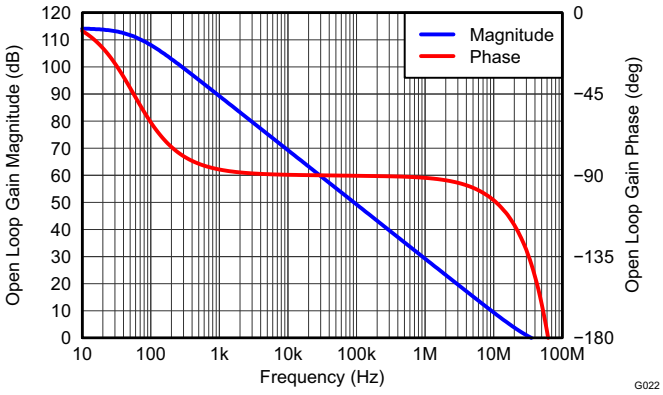

Figure 24. Main Amplifier Differential Open-Loop Gain and Phase vs Frequency

Copyright © 2013–2015, Texas Instruments Incorporated

Typical Characteristics: V_S = 2.7 V (continued)

V_{S+} = 2.7 V, V_{S-} = 0 V, CM = open, V_{OUT} = 2 Vpp, R_F = 2 kΩ, R_L = 2 kΩ Differential, G = 1V/V, Single-Ended Input, Differential Output, Input and Output Referenced to mid-supply unless otherwise noted.

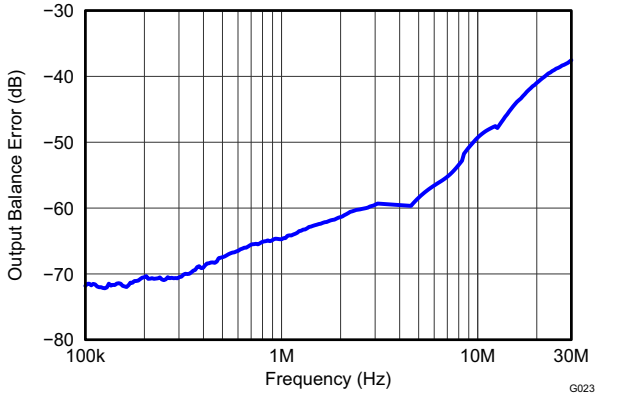

V_S = 2.7 V G = 1 V/V R_F = 2 kΩ
R_L = 2 kΩ V

Figure 25. Output Balance Error vs Frequency

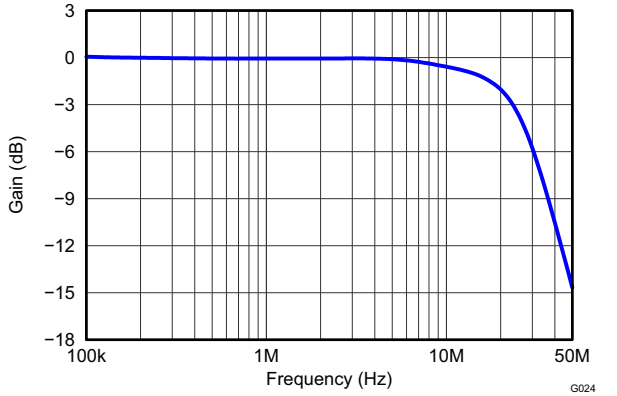

V_S = 2.7 V G = 1 V/V R_F = 2 kΩ
V_{OUT} = 100 mV_{PP}

Figure 26. V_{OCM} Small-Signal Frequency Response

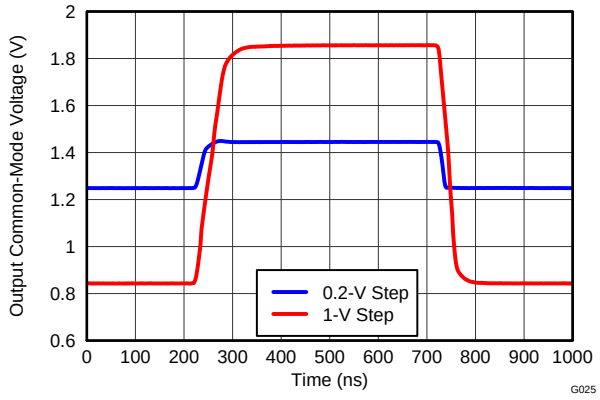

Figure 27. V_{OCM} Large- and Small Signal Pulse Response

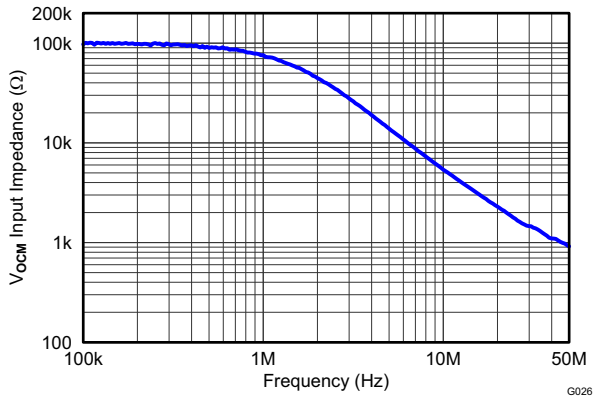

V_S = 2.7 V

Figure 28. V_{OCM} Input Impedance vs Frequency

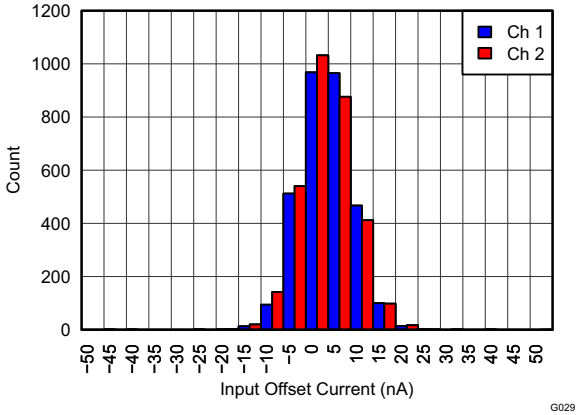

V_S = 2.7 V T_A = 25°C

Figure 29. THS4532IPW Input Offset Current Histogram

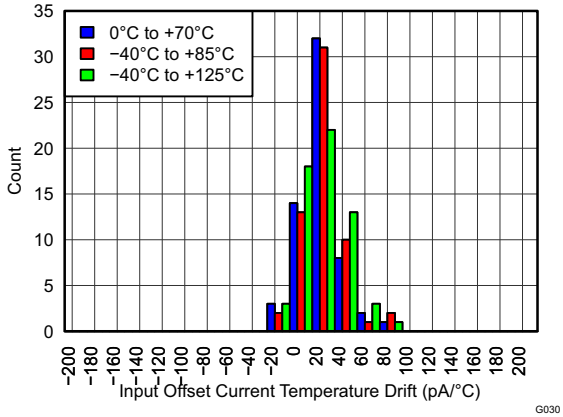

V_S = 2.7 V Both Channels
V_{OUT} = 100 mV_{PP}

Figure 30. THS4532IPW Input Offset Current Temp Drift Histogram

Typical Characteristics: V_S = 2.7 V (continued)

V_{S+} = 2.7 V, V_{S-} = 0 V, CM = open, V_{OUT} = 2 Vpp, R_F = 2 kΩ, R_L = 2 kΩ Differential, G = 1V/V, Single-Ended Input, Differential Output, Input and Output Referenced to mid-supply unless otherwise noted.

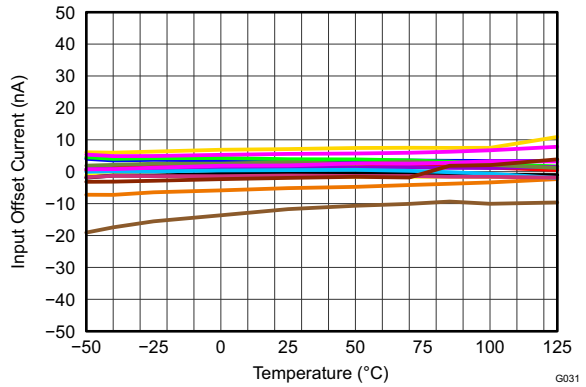

V_S = 2.7 V Channel 1

Figure 31. THS4532IPW Input Offset Current vs Temperature

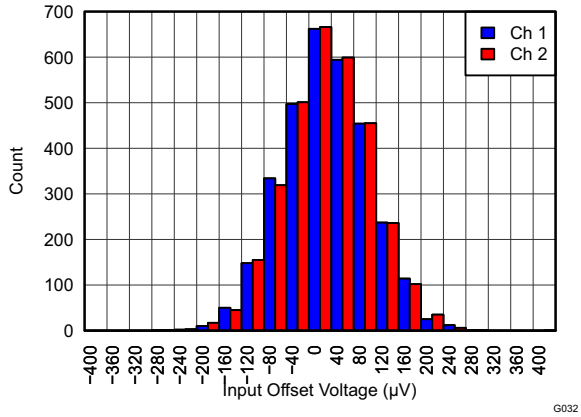

V_S = 2.7 V T_A = 25°C

Figure 32. THS4532IPW Input Offset Voltage Histogram

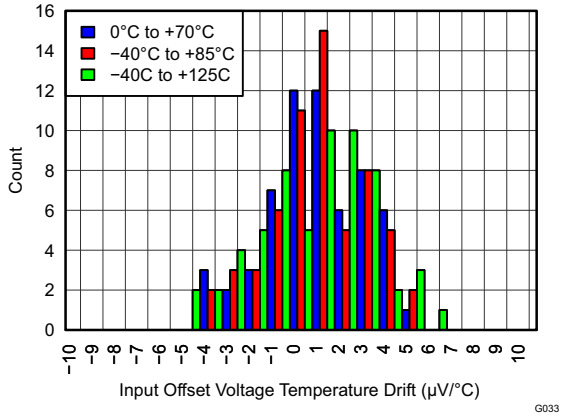

V_S = 2.7 V Both Channels

Figure 33. THS4532IPW Input Offset Voltage Temp Drift Histogram

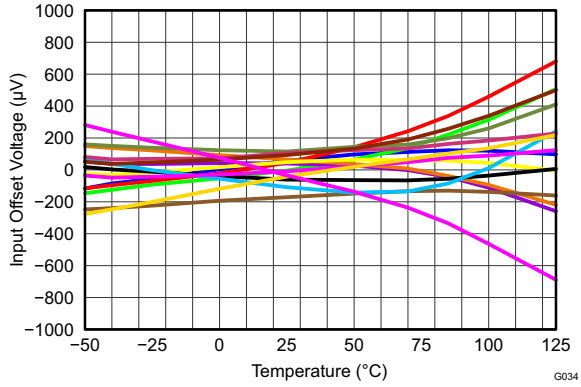

V_S = 2.7 V Channel 1

Figure 34. THS4532IPW Input Offset Voltage vs Temperature

Copyright © 2013–2015, Texas Instruments Incorporated

7.7.2 Typical Characteristics: V_S = 5 V

V_{S+} = 5 V, V_{S-} = 0 V, V_{OCM} = open, V_{OUT} = 2 Vpp, R_F = 2 kΩ, R_L = 2 kΩ Differential, G = 1V/V, Single-Ended Input, Differential Output, Input and Output Referenced to mid-supply, T_A = 25°C unless otherwise noted.

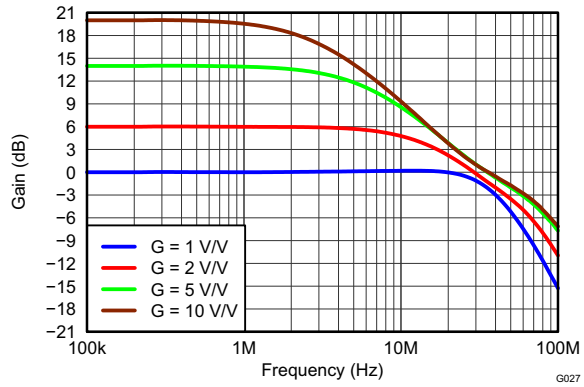

V_S = 5 V G = 1 V/V R_F = 2 kΩ
R_L = 2 kΩ V_{OUT} = 100 mV_{PP}

Figure 35. Small-Signal Frequency Response

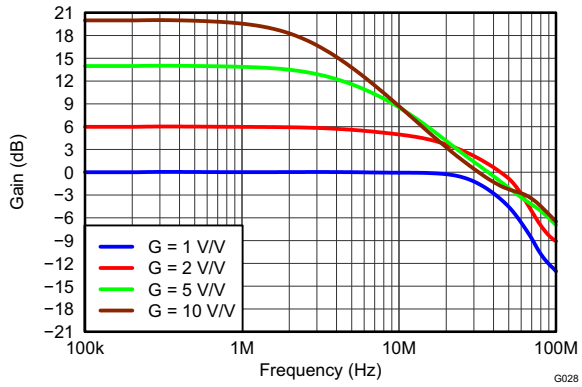

V_S = 5 V G = 1 V/V R_F = 2 kΩ
R_L = 2 kΩ V_{OUT} = 2 V_{PP}

Figure 36. Large-Signal Frequency Response

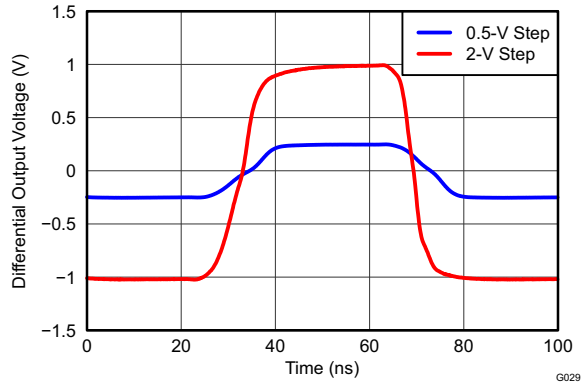

V_S = 5 V G = 1 V/V R_F = 2 kΩ
R_L = 2 kΩ

Figure 37. Large- and Small-Signal Pulse Response

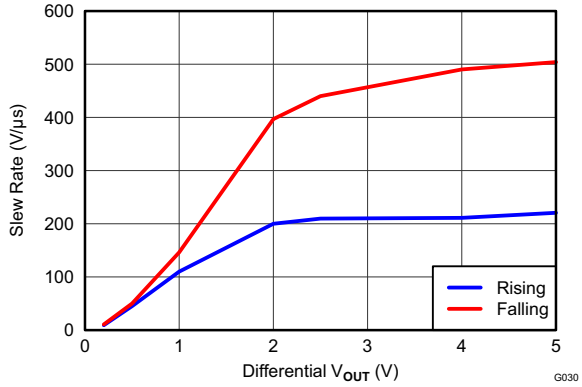

V_S = 5 V G = 2 V/V R_F = 2 kΩ
R_L = 200 Ω

Figure 38. Single-Ended Slew Rate vs V_{OUT} Step

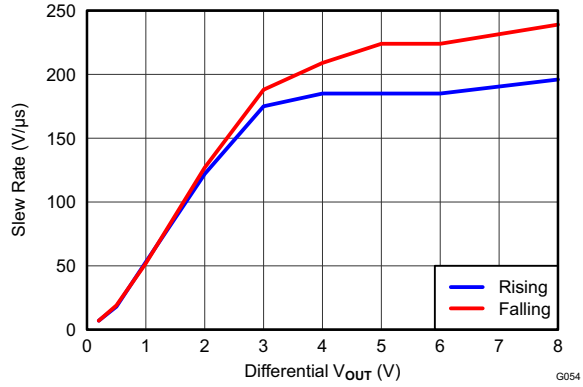

V_S = 5 V G = 2 V/V R_F = 2 kΩ
R_L = 200 Ω V_{OUT} = 100 mV_{PP}

Figure 39. Differential Slew Rate vs V_{OUT} Step

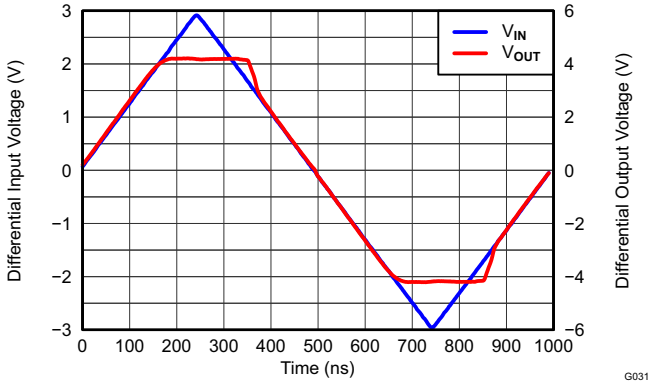

V_S = 5 V G = 2 V/V R_F = 2 kΩ
R_L = 200 Ω V_{OUT} = 100 mV_{PP}

Figure 40. Overdrive Recovery

Typical Characteristics: V_S = 5 V (continued)

V_{S+} = 5 V, V_{S-} = 0 V, V_{OCM} = open, V_{OUT} = 2 Vpp, R_F = 2 kΩ, R_L = 2 kΩ Differential, G = 1V/V, Single-Ended Input, Differential Output, Input and Output Referenced to mid-supply, T_A = 25°C unless otherwise noted.

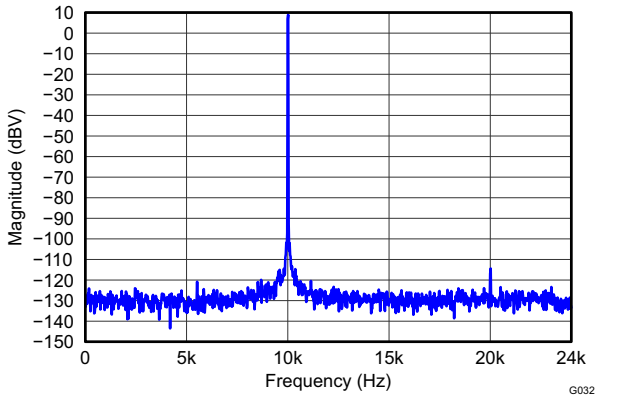

V_S = 5 V G = 1 V/V R_F = 2 kΩ
R_L = 100 kΩ V_{OUT} = 8 V_{PP}

Figure 41. 10-kHz FFT On Audio Analyzer

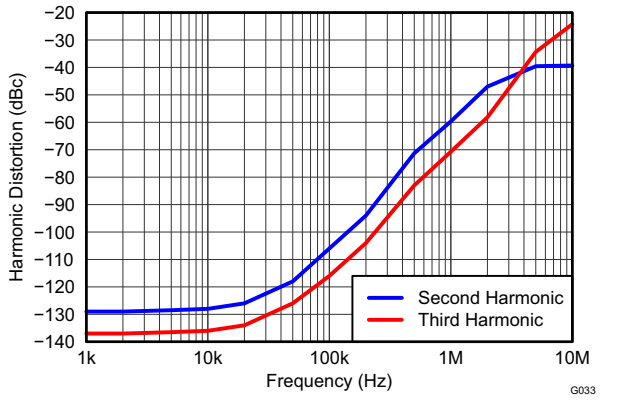

V_S = 5 V G = 1 V/V R_F = 2 kΩ
R_L = 2 kΩ V_{OUT} = 2V_{PP}

Figure 42. Harmonic Distortion vs Frequency

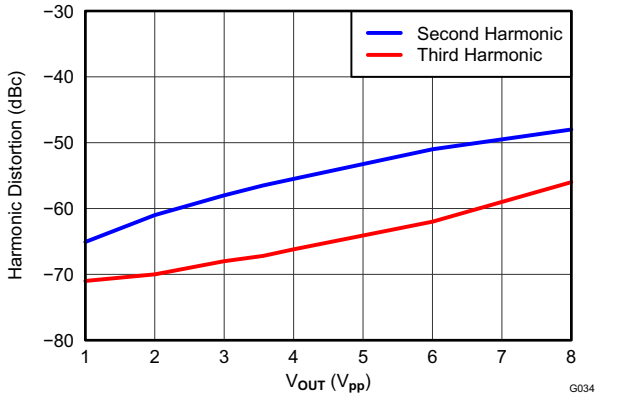

V_S = 5 V G = 1 V/V R_F = 2 kΩ
R_L = 2 kΩ f = 1 MHz

Figure 43. Harmonic Distortion vs Output Voltage at 1 MHz

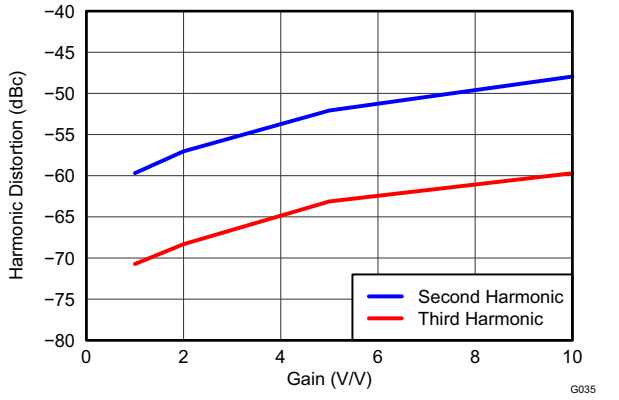

V_S = 5 V R_F = 2 kΩ R_L = 2 kΩ
V_{OUT} = 2 V_{PP} f = 1 MHz

Figure 44. Harmonic Distortion vs Gain at 1 MHz

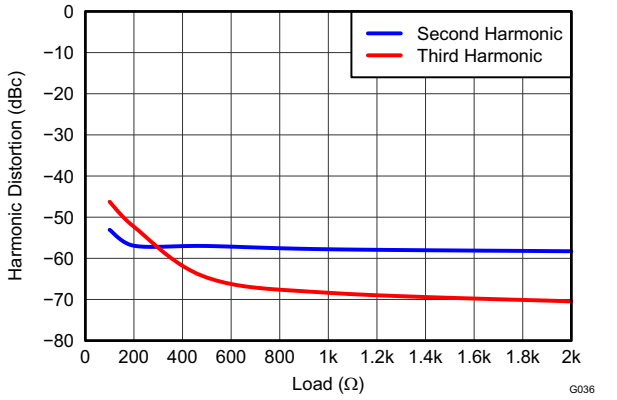

V_S = 5 V G = 1 V/V R_F = 2 kΩ
V_{OUT} 2 V_{PP} f = 1 MHz

Figure 45. Harmonic Distortion vs Load at 1 MHz

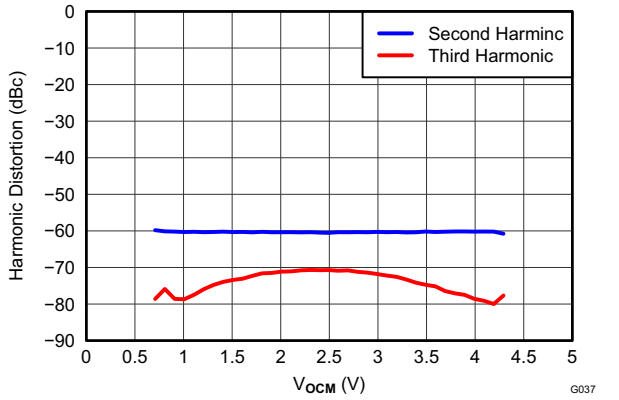

V_S = 5 V G = 1 V/V R_F = 2 kΩ
R_L = 2 kΩ V_{OUT} = 2 V_{PP} f = 1 MHz

Figure 46. Harmonic Distortion vs V_{OCM} at 1 MHz

Copyright © 2013–2015, Texas Instruments Incorporated

Typical Characteristics: V_S = 5 V (continued)

V_{S+} = 5 V, V_{S-} = 0 V, V_{OCM} = open, V_{OUT} = 2 Vpp, R_F = 2 kΩ, R_L = 2 kΩ Differential, G = 1V/V, Single-Ended Input, Differential Output, Input and Output Referenced to mid-supply, T_A = 25°C unless otherwise noted.

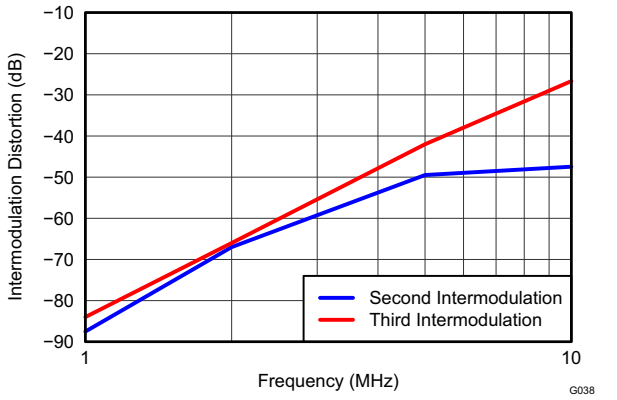

V_S = 5 V G = 1 V/V R_F = 2 kΩ
R_L = 2 kΩ V_{OUT} = 2 V_{PP} Envelope

Figure 47. Two-Tone, 2nd and 3rd Order Intermodulation Distortion vs Frequency

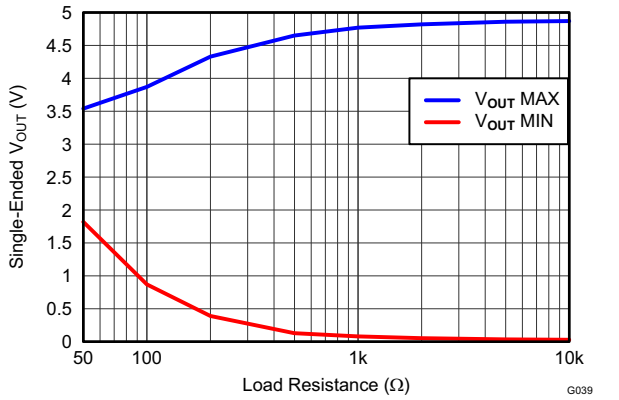

V_S = 5 V G = 2 V/V R_F = 2 kΩ

Figure 48. Single-Ended Output Voltage Swing vs Load Resistance

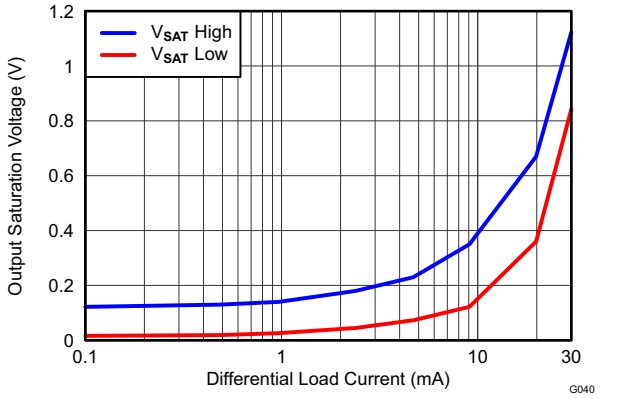

V_S = 5 V G = 2 V/V R_F = 2 kΩ

Figure 49. Single-Ended Output Saturation Voltage vs Load Current

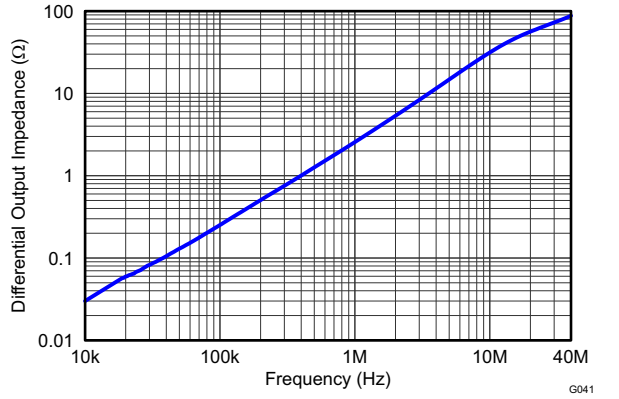

V_S = 5 V G = 1 V/V R_F = 2 kΩ
V_{OUT} = 100 mV_{PP}

Figure 50. Main Amplifier Differential Output Impedance vs Frequency

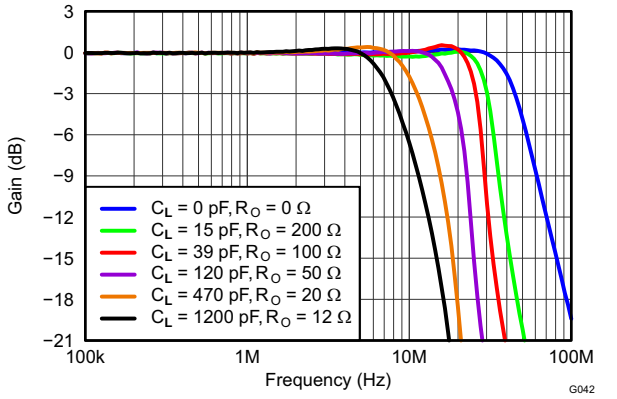

V_S = 5 V G = 1 V/V R_F = 2 kΩ
R_L = 2 kΩ V_{OUT} = 100 mV_{PP}

Figure 51. Frequency Response vs C_{LOAD}

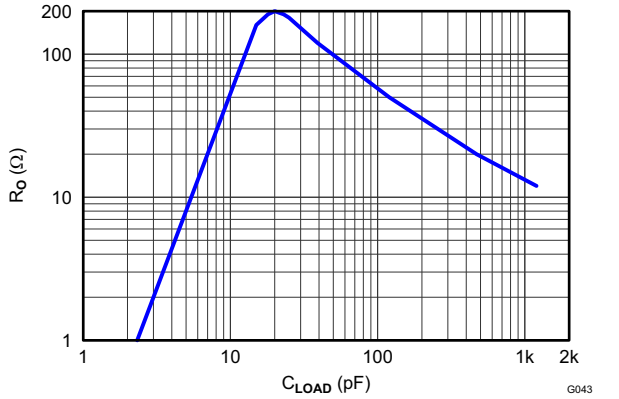

V_S = 5 V G = 1 V/V R_F = 2 kΩ
R_L = 2 kΩ

Figure 52. R_O vs C_{LOAD}

Typical Characteristics: V_S = 5 V (continued)

V_{S+} = 5 V, V_{S-} = 0 V, V_{OCM} = open, V_{OUT} = 2 Vpp, R_F = 2 kΩ, R_L = 2 kΩ Differential, G = 1V/V, Single-Ended Input, Differential Output, Input and Output Referenced to mid-supply, T_A = 25°C unless otherwise noted.

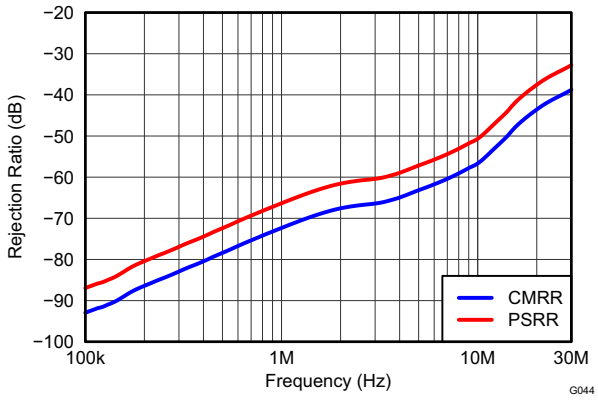

V_S = 5 V G = 1 V/V R_F = 2 kΩ
R_L = 2 kΩ

Figure 53. Rejection Ratio vs Frequency

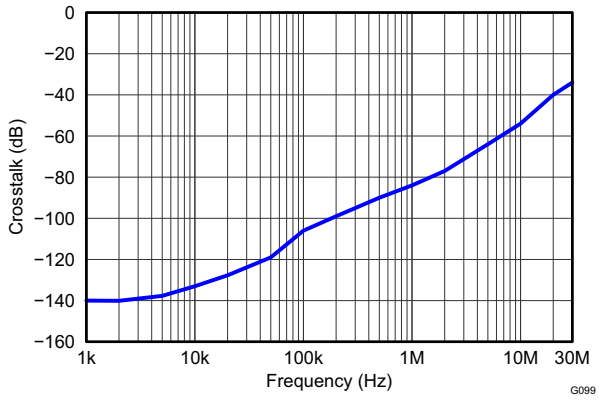

V_S = 5 V G = 1 V/V R_F = 2 kΩ
R_L = 2 kΩ V_{OUT} = 2 V_{PP}

Figure 54. Crosstalk vs Frequency

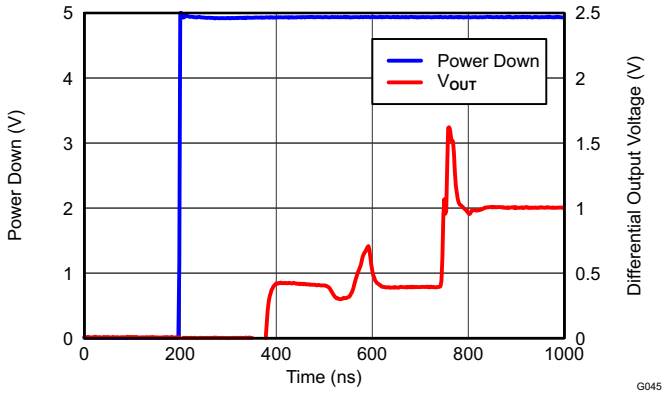

V_S = 5 V G = 1 V/V R_F = 2 kΩ
R_L = 200 Ω V_{IN} = 1 V

Figure 55. Turn-On Time

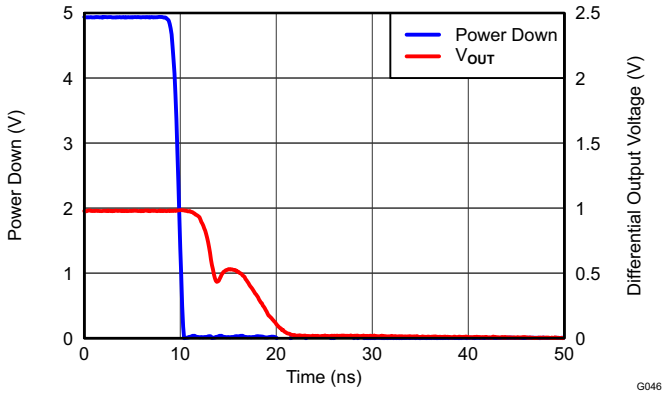

V_S = 5 V G = 1 V/V R_F = 2 kΩ
R_L = 200 Ω

Figure 56. Turn-Off Time

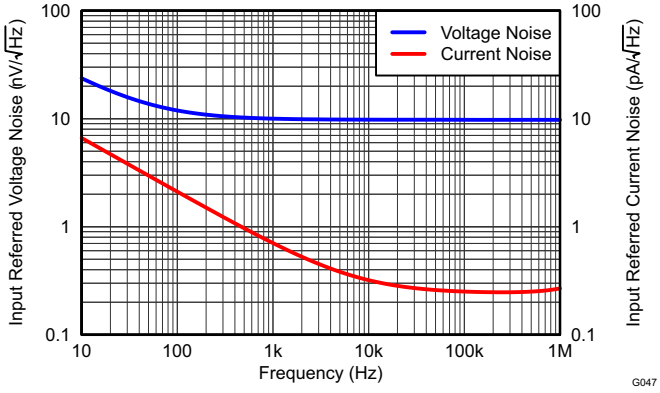

Figure 57. Input-Referred Voltage Noise and Current Noise Spectral Density

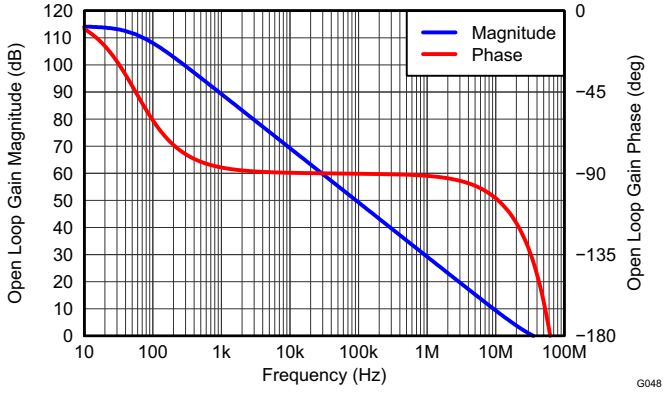

Figure 58. Main Amplifier Differential Open-Loop Gain and Phase vs Frequency

Copyright © 2013–2015, Texas Instruments Incorporated

Typical Characteristics: V_S = 5 V (continued)

V_{S+} = 5 V, V_{S-} = 0 V, V_{OCM} = open, V_{OUT} = 2 Vpp, R_F = 2 kΩ, R_L = 2 kΩ Differential, G = 1V/V, Single-Ended Input, Differential Output, Input and Output Referenced to mid-supply, T_A = 25°C unless otherwise noted.

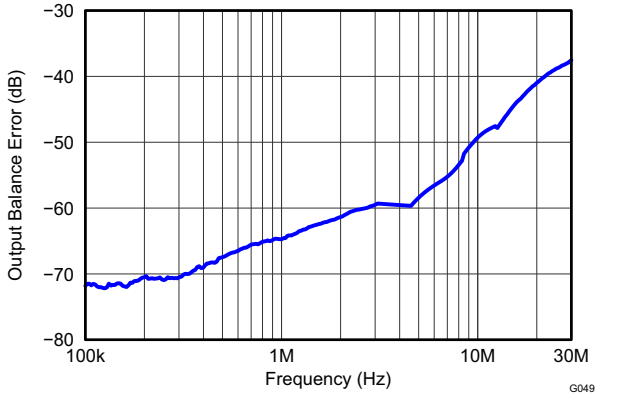

V_S = 5 V G = 1 V/V R_F = 2 kΩ
R_L = 2 kΩ

Figure 59. Output Balance Error vs Frequency

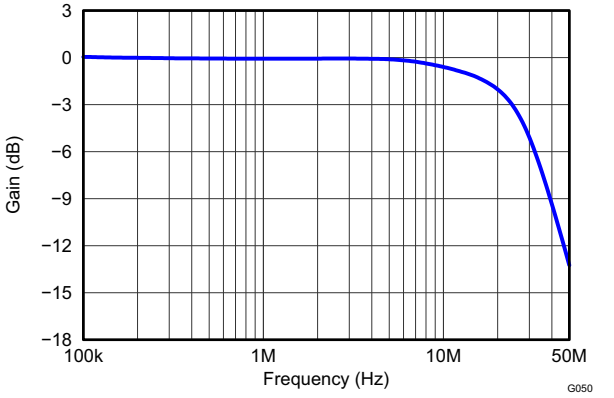

V_S = 5 V G = 1 V/V R_F = 2 kΩ
V_{OUT} = 200 mV_{PP}

Figure 60. V_{OCM} Small-Signal Frequency Response

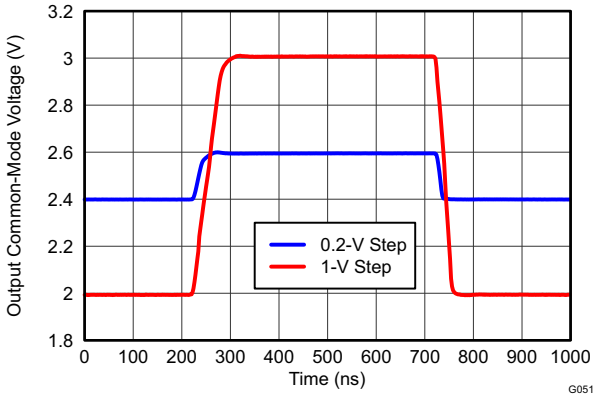

Figure 61. V_{OCM} Large- and Small Signal Pulse Response

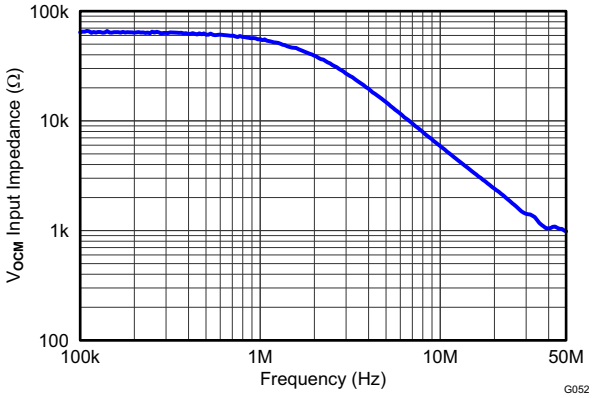

V_S = 5 V

Figure 62. V_{OCM} Input Impedance vs Frequency

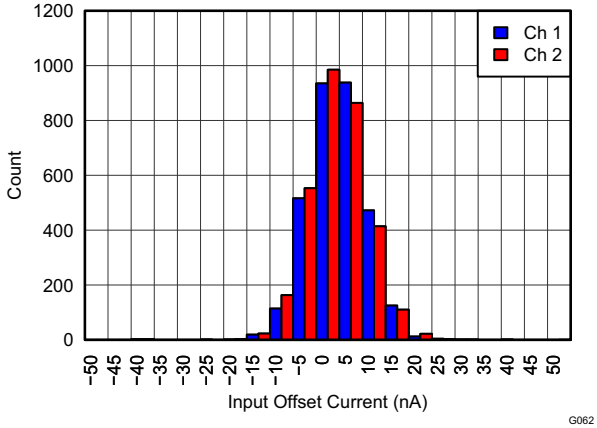

V_S = 5 V T_A = 25°C

Figure 63. THS4532IPW Input Offset Current Histogram

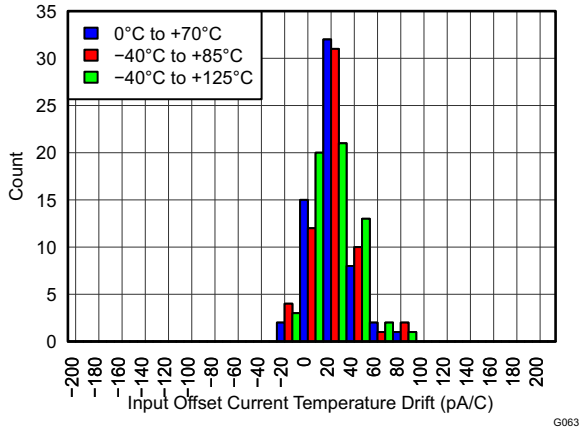

V_S = 5 V Both Channels

Figure 64. THS4532IPW Input Offset Current Temp Drift Histogram

Typical Characteristics: V_S = 5 V (continued)

V_{S+} = 5 V, V_{S-} = 0 V, V_{OCM} = open, V_{OUT} = 2 Vpp, R_F = 2 kΩ, R_L = 2 kΩ Differential, G = 1V/V, Single-Ended Input, Differential Output, Input and Output Referenced to mid-supply, T_A = 25°C unless otherwise noted.

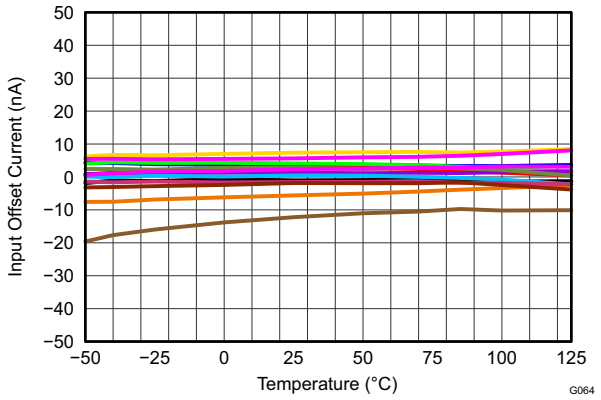

V_S = 5 V Channel 1

Figure 65. THS4532IPW Input Offset Current vs Temperature

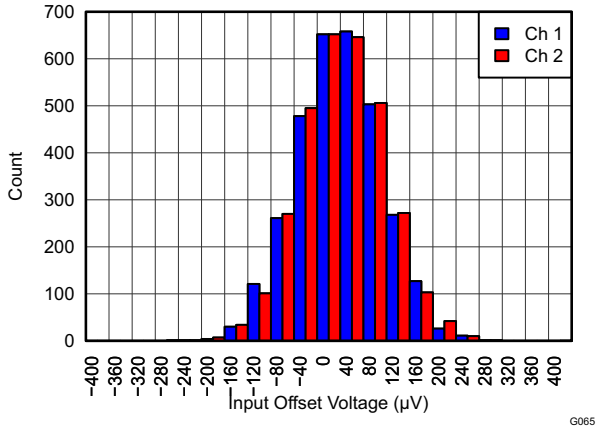

V_S = 5 V T_A = 25°C

Figure 66. THS4532IPW Input Offset Voltage Histogram

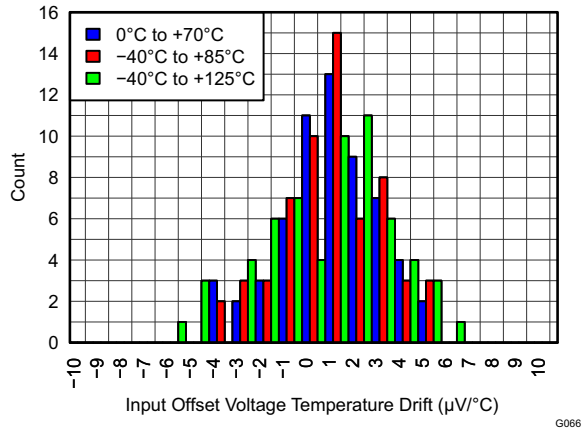

V_S = 5 V Both Channels

Figure 67. THS4532IPW Input Offset Voltage Temp Drift Histogram

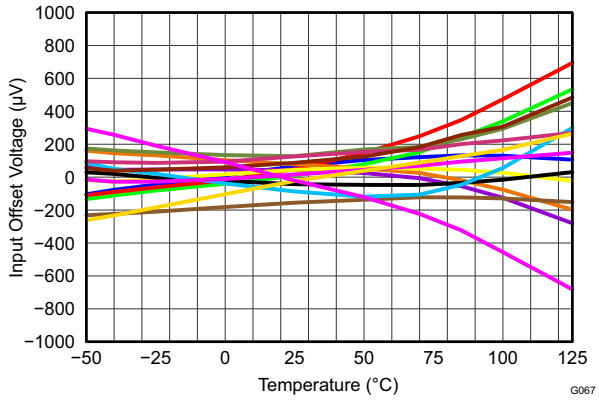

V_S = 5 V Channel 1

Figure 68. THS4532IPW Input Offset Voltage vs Temperature

Copyright © 2013–2015, Texas Instruments Incorporated

8 Detailed Description

8.1 Overview

As shown in the *Functional Block Diagram*, the THS4532 device is comprised of three functional blocks: a fully-differential amplifier with high open-loop gain of 114 dB, a servo amplifier to set the common-mode voltage of the output equal to the V_{OCM} input, and a power-down circuit to greatly reduce the power consumption when the device is idle.

The common-mode voltage servo has impressive performance specifications of ±1% maximum gain error, ±5-mV maximum voltage offset, and 24-MHz bandwidth.

8.2 Functional Block Diagram

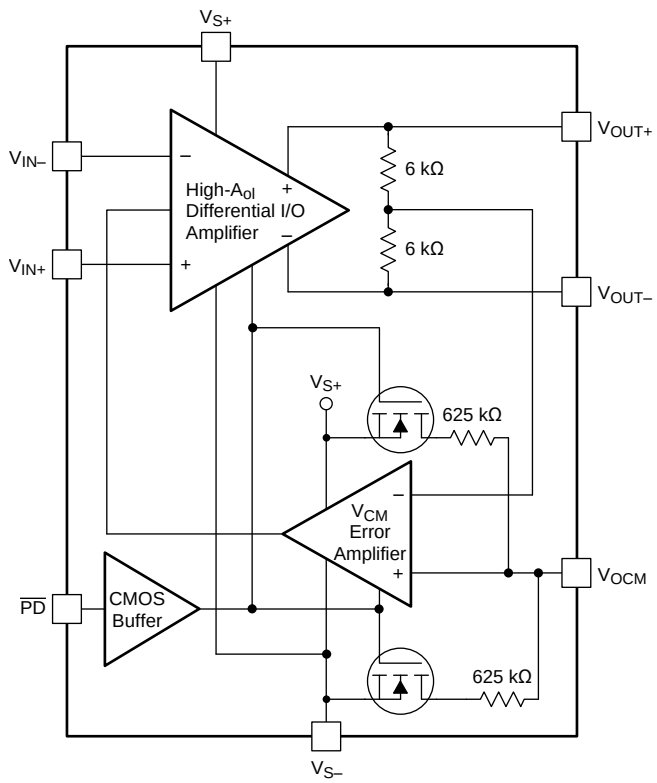

8.3 Feature Description

8.3.1 Input Common-Mode Voltage Range

The input common-mode voltage of a fully-differential amplifier is the voltage at the positive and negative (+ and –) input pins of the amplifier.

Do not violate the input common-mode voltage range (V_{ICR}) of the amplifier. Assuming the amplifier is in linear operation, the voltage across the input pins is only a few millivolts at most. Therefore, finding the voltage at one input pin determines the input common-mode voltage of the amplifier.

Use Equation 1 to calculate the voltage with the negative input as a summing node.

$$\left(V_{OUT+} \times \frac{R_G}{R_G + R_F}\right) + \left(V_{IN-} \times \frac{R_F}{R_G + R_F}\right) \tag{1}$$

To determine the V_{ICR} of the amplifier, the voltage at the negative input is evaluated at the extremes of V_{OUT+}.

As the gain of the amplifier increases, the input common-mode voltage becomes closer and closer to the input common-mode voltage of the source.

Feature Description (continued)

8.3.1.1 Setting the Output Common-Mode Voltage

The output common-model voltage is set by the voltage at the V_{OCM} pin and the internal circuit works to maintain the output common-mode voltage as close as possible to this voltage. If left unconnected, the output common-mode is set to mid-supply by internal circuitry, which may be over-driven from an external source. Figure 69 is representative of the V_{OCM} input. The internal V_{OCM} circuit has about 24-MHz of –3-dB bandwidth, which is required for best performance, but it is intended to be a DC bias input pin. Bypass capacitors are recommended on this pin to reduce noise. Use Equation 2 to calculate the external current required to overdrive the internal resistor divider.

$$I_{EXT} = \frac{2V_{OCM} - (V_{S+} + V_{S-})}{625\ k\Omega} \tag{2}$$

where

- V_{OCM} is the voltage applied to the V_{OCM} pin.

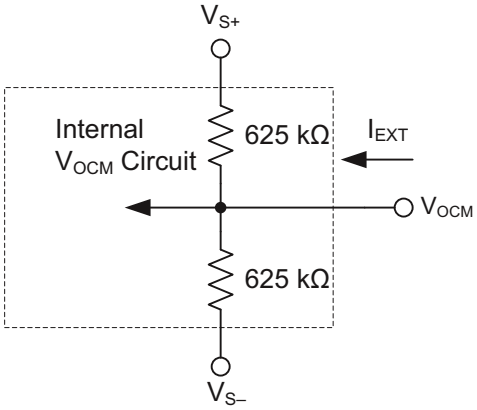

Figure 69. Simplified V_{OCM} Input Circuit

Copyright © 2013–2015, Texas Instruments Incorporated

Feature Description (continued)

8.3.2 Power Down

The power down pin is internally connected to a CMOS stage which must be driven to a minimum of 2.1 V to ensure proper high logic.

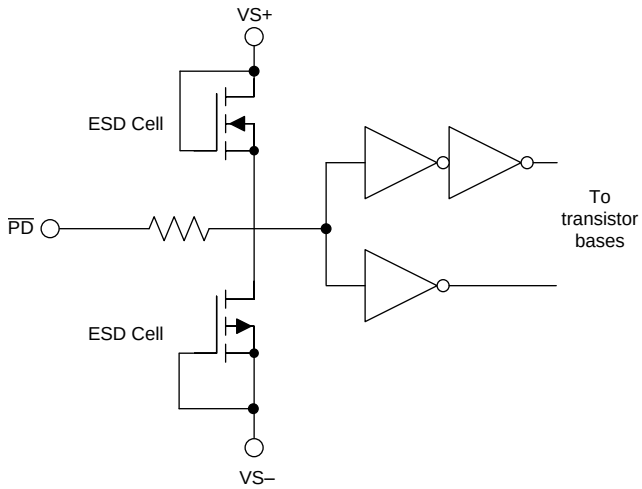

Figure 70. Simplified Power-Down Internal Circuit

If 1.8-V logic is used to drive the pin, a shoot through current of up to 100 µA may develop in the digital logic causing the overall quiescent current to exceed the 2 µA of maximum disabled quiescent current specified in the *Electrical Characteristics: V_S = 2.7 V*.

To properly interface to 1.8-V logic with minimal increase in additional current draw, a logic-level translator like the SN74AVC1T45 device can be used.

Alternatively, the same function can be achieved using a diode and pullup resistor as shown in Figure 71.

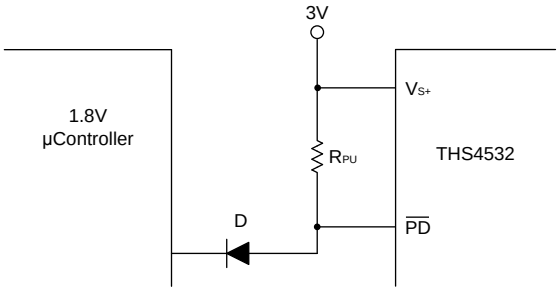

Figure 71. THS5432 Power Down Interface to 1.8-V Logic Microcontroller

The voltage at the power down pin will be a function of the supply voltage, input logic level, and diode drop. As long as the diode is forward biased, the power down voltage is calculated using Equation 3.

$$V_{PD} = V_L + V_f$$

where

- V_L is the logic level voltage.
- V_f is the forward voltage drop across the diode. (3)

This means for 1.8-V logic, the forward voltage of the diode should be greater than 0.3 V but less than 0.7 V to keep the power down logic level above 2.1 V and less than 0.7 V respectively.

For example, if 1N914 is selected as the diode with a forward voltage of approximately 0.4 V, the translated logic voltages will be 0.4 V for disabled operation and 2.2 V for enabled operation.

Feature Description (continued)

Use Equation 4 to calculate the additional current draw.

$$i_{PD} = \frac{V_{CC} - (V_L + V_f)}{R_{PU}} \tag{4}$$

Equation 2 shows that larger values of RPU result in a smaller additional current. A reasonable value of RPU is 500 kΩ where an additional current draw of 5.2 µA is expected while the device is in operation and 1.6 µA when disabled.

8.4 Device Functional Modes

The THS4532 has two functional modes: full-power mode and power-down mode. The power-down mode reduces the quiescent current of the device to 500 nA from a typical value of 290 µA with a 5-V supply.

With a turnon time of only 600 ns and a turnoff time of 15 ns, the power-down mode can be used to greatly reduce the average power consumption of the device without sacrificing system performance.

Copyright © 2013–2015, Texas Instruments Incorporated

9 Application and Implementation

NOTE

Information in the following applications sections is not part of the TI component specification, and TI does not warrant its accuracy or completeness. TI's customers are responsible for determining suitability of components for their purposes. Customers should validate and test their design implementation to confirm system functionality.

9.1 Application Information

Figure 72 shows the general test circuit built on the EVM that was used for testing the THS5432. For simplicity, power supply decoupling is not shown – see *Layout* for recommendations. Depending on the test conditions, component values are changed per Table 4 and Table 5, or as otherwise noted. Some of the signal generators used are AC-coupled 50-Ω sources and a 0.22-µF capacitor and 49.9-Ω resistor to ground are inserted across R_{IT} on the un-driven or alternate input as shown to balance the circuit. A split-power supply is used to ease the interface to common lab test equipment, but if properly biased, the amplifier can be operated single-supply as described in the applications section with no impact on performance. For most of the tests, the devices are tested with single ended input and a transformer on the output to convert the differential output to single ended because common lab test equipment have single ended inputs and outputs. Performance is the same or better with differential input and differential output.

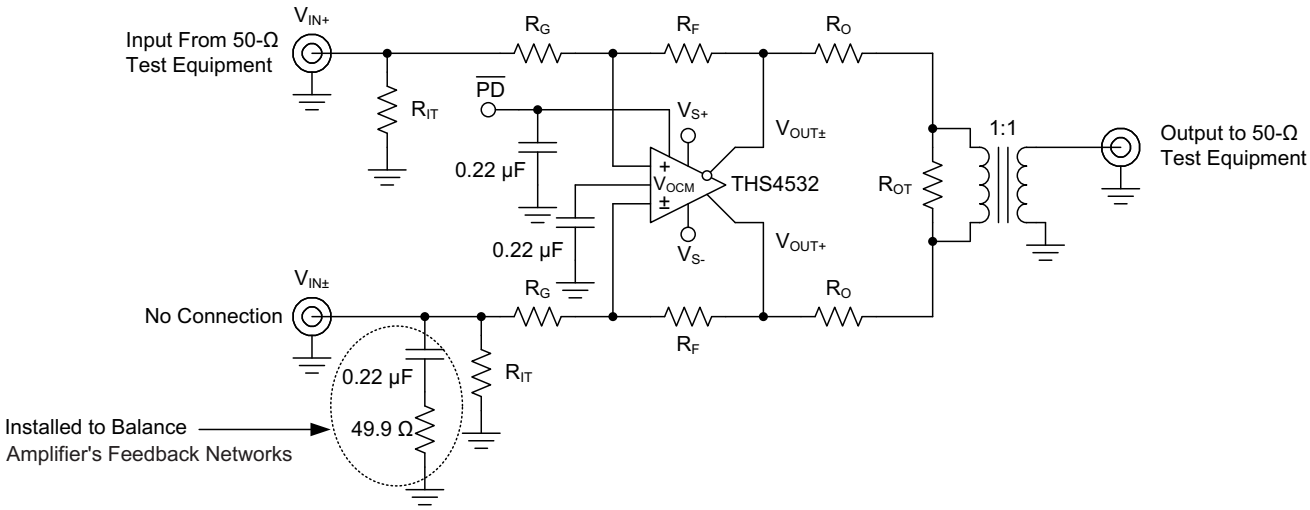

Figure 72. General Test Circuit

Table 4. Gain Component Values for Single-Ended Input(1)

GAIN	R_F	R_G	R_{IT}
1 V/V	2 kΩ	2 kΩ	51.1 Ω
2 V/V	2 kΩ	1 kΩ	52.3 Ω
5 V/V	2 kΩ	392 Ω	53.6 Ω
10 V/V	2 kΩ	187 Ω	57.6 Ω

(1) Components are chosen to achieve gain and 50-Ω input termination. Resistor values shown are closest standard values so gains are approximate.

Table 5. Load Component Values For 1:1 Differential to Single-Ended Output Transformer(1)

R_L	R_O	R_{OT}	ATTEN (dB)
100 Ω	25 Ω	open	6
200 Ω	84.5 Ω	71.5 Ω	16.7
500 Ω	237 Ω	56.2 Ω	25.6
1 kΩ	487 Ω	52.3 Ω	31.8
2 kΩ	976 Ω	51.1 Ω	38

(1) The total load includes 50-Ω termination by the test equipment. Components are chosen to achieve load and 50-Ω line termination through a 1:1 transformer. Resistor values shown are closest standard values so loads are approximate.

Because of the voltage divider on the output formed by the load component values, the output of the amplifier is attenuated. The column *ATTEN* in Table 5 shows the attenuation expected from the resistor divider. When using a transformer at the output as shown in Figure 72, the signal has slightly more loss because of transformer insertion loss, and these numbers are approximate. The standard output load used for most tests is 2 kΩ with associated 38 dB of loss.

9.1.1 Frequency Response and Output Impedance

The circuit shown in Figure 72 is used to measure the frequency response of the amplifier.

A network analyzer is used as the signal source and the measurement device. The output impedance of the network analyzer is 50 Ω and is AC coupled. R_{IT} and R_G are selected to impedance match to 50 Ω and maintain the proper gain. To balance the amplifier, a 49.9-Ω resistor and blocking capacitor to ground is inserted across R_{IT} on the alternate input.

The output is routed to the input of the network analyzer through 50-Ω coax. For a 2k load, 38 dB is added to the measurement to refer back to the output of the amplifier according to Table 5.

For output impedance, the signal is injected at V_{OUT} with V_{IN} left open. The voltage drop across the 2x R_O resistors is measured with a high impedance differential probe and used to calculate the impedance into the output of the amplifier.

9.1.2 Distortion

At 1 MHz and above, the circuit shown in Figure 72 is used to measure harmonic, intermodulation distortion, and output impedance of the amplifier.

A signal generator is used as the signal source and the output is measured with a spectrum analyzer. The output impedance of the signal generator is 50 Ω and is AC coupled. R_{IT} and R_G are chosen to impedance match to 50 Ω and maintain the proper gain. To balance the amplifier, a 0.22-µF capacitor and 49.9-Ω resistor to ground is inserted across R_{IT} on the alternate input. A low-pass filter is inserted in series with the input to reduce harmonics generated by the signal source. The level of the fundamental is measured and then a high-pass filter is inserted at the output to reduce the fundamental so it does not generate distortion in the input of the spectrum analyzer.

Distortion in the audio band is measured using an audio analyzer. Refer to the *Audio Performance* section for details.

9.1.3 Slew Rate, Transient Response, Settling Time, Overdrive, Output Voltage, and Turnon and Turnoff Time

The circuit shown in Figure 73 is used to measure slew rate, transient response, settling time, overdrive recovery, and output voltage swing. Turnon and turnoff times are measured with 50-Ω input termination on the $\overline{PD}$ input, by replacing the 0.22-µF capacitor with 49.9-Ω resistor.

Copyright © 2013–2015, Texas Instruments Incorporated

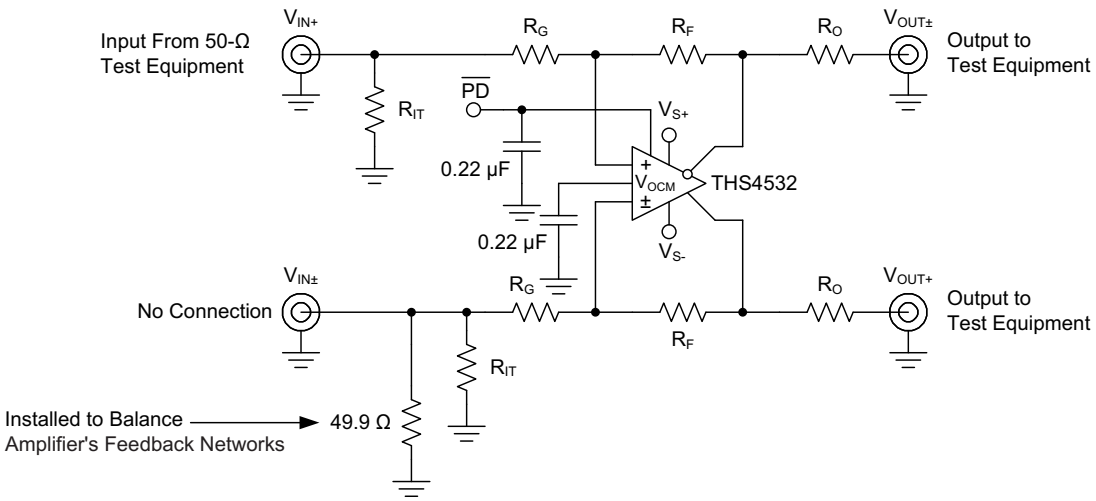

Figure 73. Slew Rate, Transient Response, Settling Time, Z_O, Overdrive Recovery, V_{OUT} Swing, and Turn-On and Turn-Off Test Circuit

9.1.4 Common-Mode and Power Supply Rejection

The circuit shown in Figure 74 is used to measure the CMRR. The signal from the network analyzer is applied common-mode to the input.

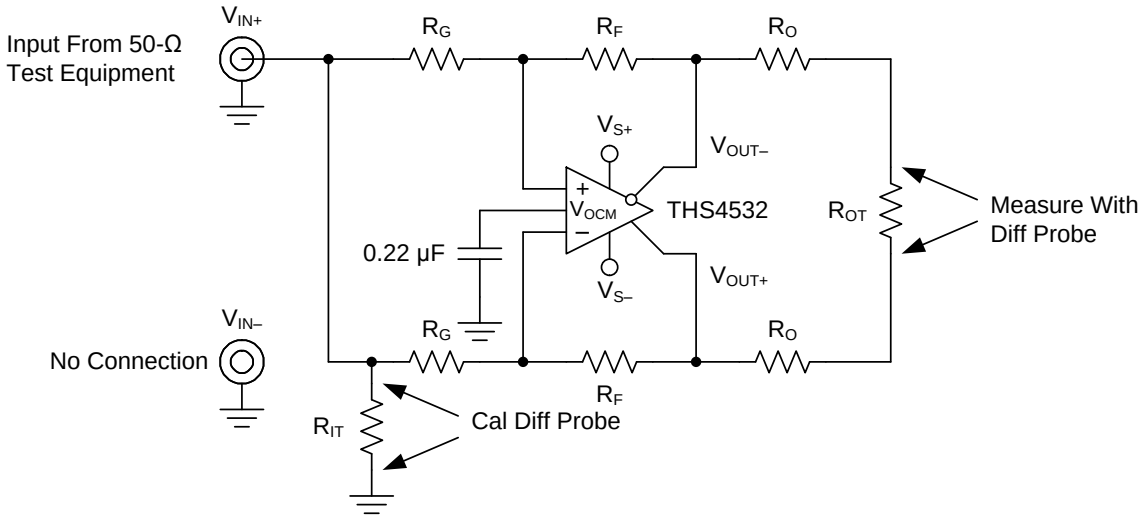

Figure 74. CMRR Test Circuit

Figure 75 is used to measure the PSRR of V_{S+} and V_{S-}. The power supply is applied to the network DC offset input of the analyzer. For both CMRR and PSRR, the output is probed using a high impedance differential probe across R_{OT}. The calculated CMRR and PSRR are referred to the input of the device.

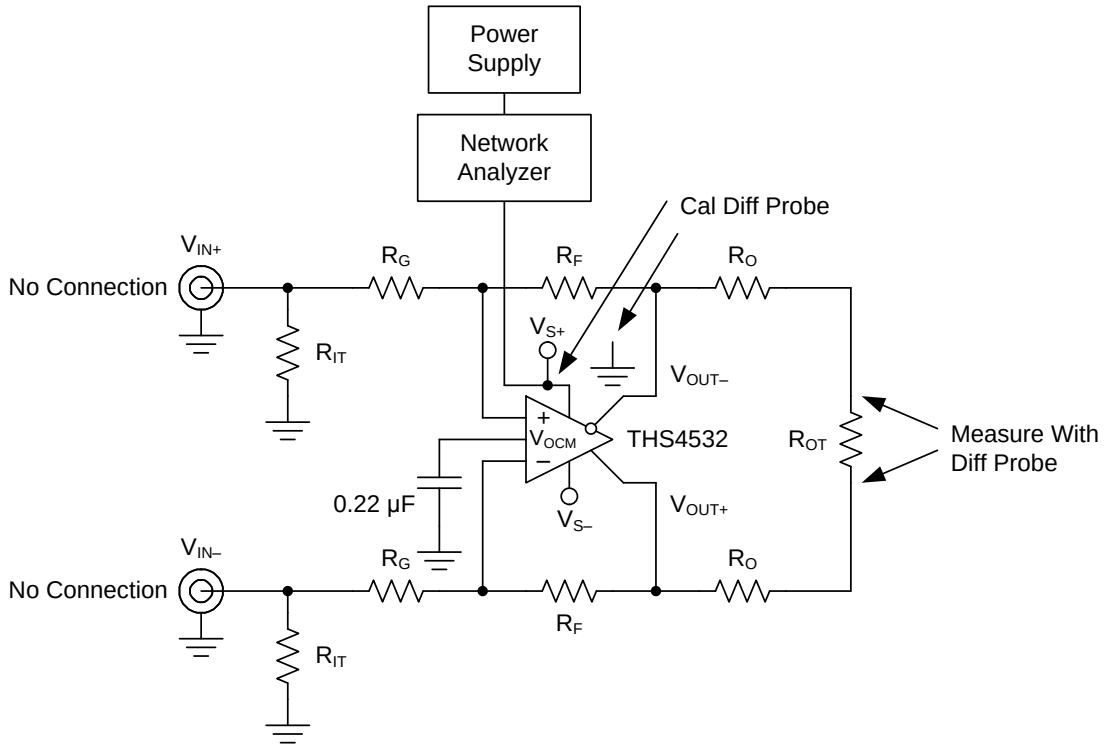

Figure 75. PSRR Test Circuit

9.1.5 V_{OCM} Input

The circuit shown in Figure 76 is used to measure the transient response, frequency response, and input impedance of the V_{OCM} input. For these tests, the cal point is across the 49.9 Ω V_{OCM} termination resistor. Transient response and frequency response are measured with R_{CM} = 0 Ω and using a high impedance differential probe at the summing junction of the two R_O resistors, with respect to ground. The input impedance is measured using a high impedance differential probe at the V_{OCM} pin and the drop across R_{CM} is used to calculate the impedance into the V_{OCM} input of the amplifier.

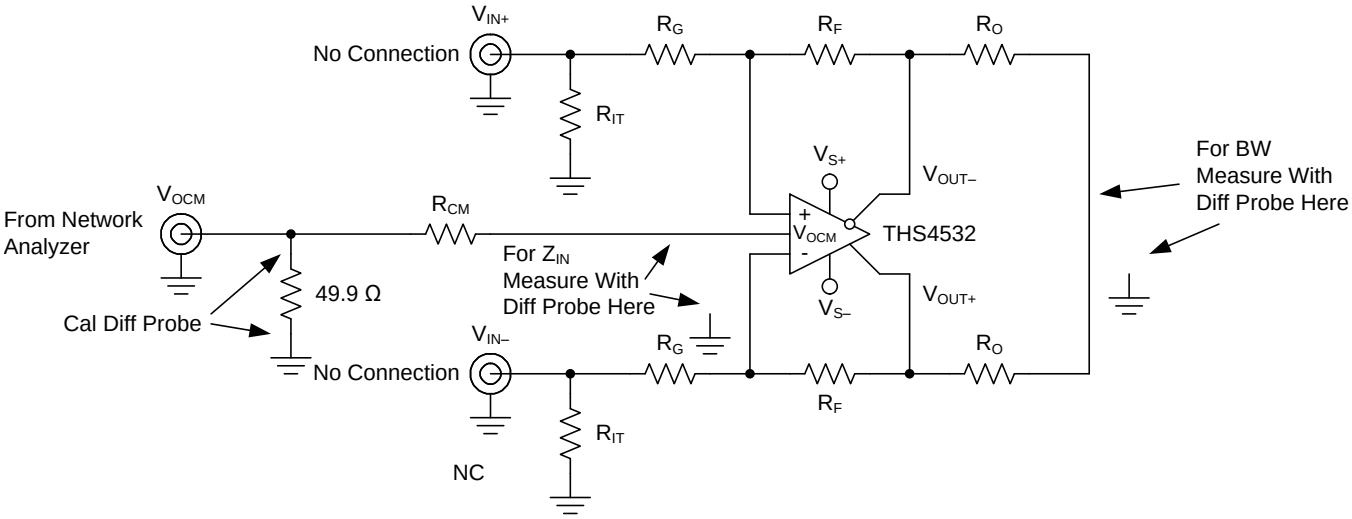

Figure 76. V_{OCM} Input Test Circuit

Copyright © 2013–2015, Texas Instruments Incorporated

9.1.6 Balance Error

The circuit shown in Figure 77 is used to measure the balance error of the main differential amplifier. A network analyzer is used as the signal source and the measurement device. The output impedance of the network analyzer is 50 Ω and is DC coupled. R_{IT} and R_G are chosen to impedance match to 50 Ω and maintain the proper gain. To balance the amplifier, a 49.9-Ω resistor to ground is inserted across R_{IT} on the alternate input. The output is measured using a high impedance differential probe at the summing junction of the two R_O resistors, with respect to ground.

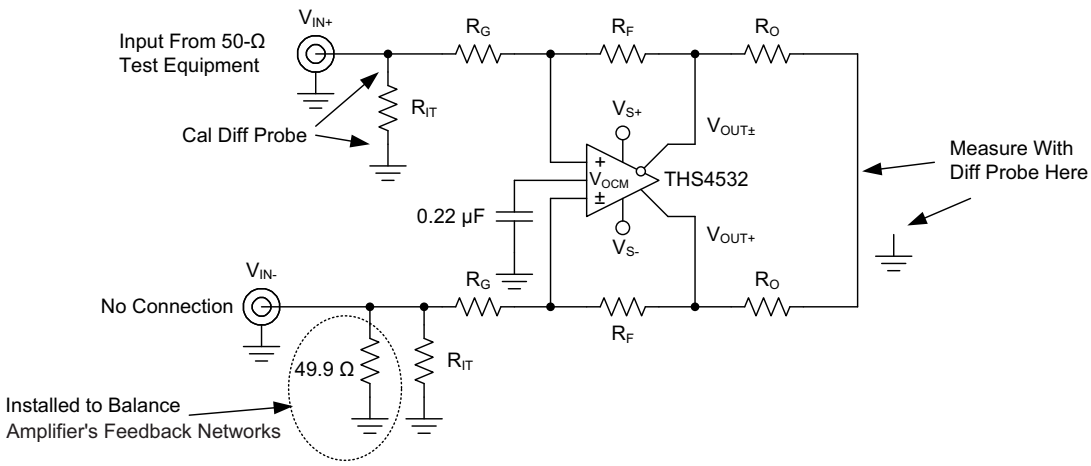

Figure 77. Balance Error Test Circuit

9.1.7 Single-Supply Operation

To facilitate testing with common lab equipment, the THS5432 EVM is built to allow for split-supply operation and most of the data presented in this data sheet was taken with split-supply power inputs. The device is designed for use with single-supply power operation and can easily be used with single-supply power without degrading the performance. The only requirement is to bias the device properly and the specifications in this data sheet are given for single supply operation.

9.1.8 Low-Power Applications and the Effects of Resistor Values on Bandwidth

The THS5432 is designed for the nominal value of R_F to be 2 kΩ. This gives excellent distortion performance, maximum bandwidth, best flatness, and best pulse response. It also loads the amplifier. For example; in gain of 1 with $R_F = R_G = 2$ kΩ, R_G to ground, and $V_{OUT+} = 4$ V, 1 mA of current will flow through the feedback path to ground. In low power applications, reducing this current is desirable by increasing the gain setting resistors values. Using larger value gain resistors has three primary side effects (other than lower power) because of the interaction with the device and PCB parasitic capacitance:

- Lowers the bandwidth.
- Lowers the phase margin.
  - This causes peaking in the frequency response.
  - This also causes overshoot and ringing in the pulse response.
- Increases the output noise.

Figure 78 shows the small signal frequency response for gain of 1 with R_F and R_G equal to 2 kΩ, 10 kΩ, and 100 kΩ. The test was done with $R_L = 2$ kΩ. Because of loading effects of R_L, lower values may reduce the peaking, but higher values will not have a significant effect.

As expected, larger value gain resistors cause lower bandwidth and peaking in the response (peaking in frequency response is synonymous with overshoot and ringing in pulse response). These effects are caused by the feedback pole created by the summing-junction capacitance and these larger Rf values.

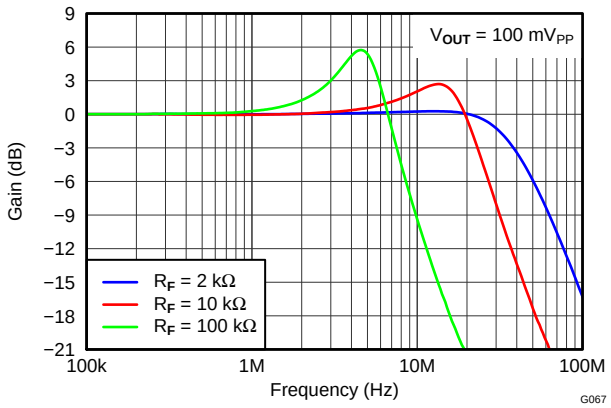

Figure 78. THS5432 Frequency Response with Various Gain Setting Resistor Values

9.1.9 Driving Capacitive Loads

The THS5432 is designed for a nominal parasitic capacitive load of 2 pF (differentially). When driving capacitive loads greater than this, TI recommends using small resisters (R_O) in series with the output as close to the device as possible. Without R_O, capacitance on the output interacts with the output impedance of the amplifier causing phase shift in the loop gain of the amplifier that reduces the phase margin resulting in:

- Peaking in the frequency response.
- Overshoot, undershoot, and ringing in the time domain response with a pulse or square-wave signal.
- May lead to instability or oscillation.

Inserting R_O compensates the phase shift and restores the phase margin, but it also limits bandwidth. The circuit shown in Figure 73 is used to test for best R_O versus capacitive loads, C_L, with a capacitance placed differential across the V_{OUT+} and V_{OUT-} along with 2-kΩ load resistor, and the output is measure with a differential probe. Figure 79 shows the suggested values of R_O versus capacitive loads, C_L, and Figure 80 shows the frequency response with various values. Performance is the same on both 2.7-V and 5-V supply.

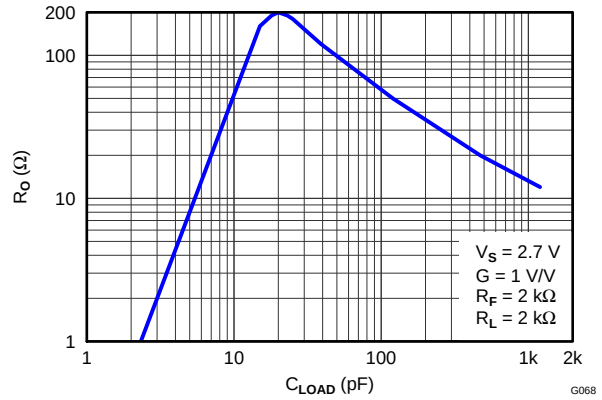

Figure 79. Recommended Series Output Resistor vs Capacitive Load for Flat Frequency Response

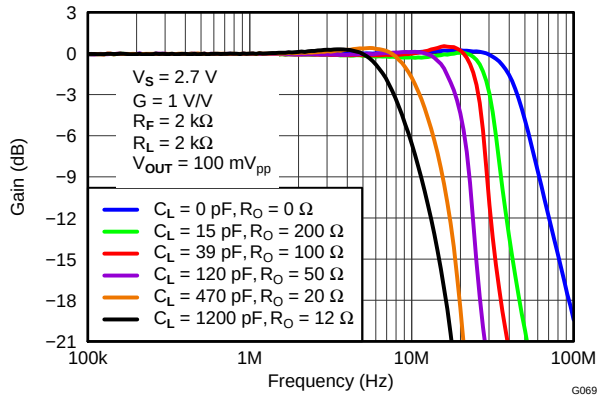

Figure 80. Frequency Response for Various R_O and C_L Values

Copyright © 2013–2015, Texas Instruments Incorporated

9.1.10 Audio Performance

The THS5432 provides excellent audio performance with very low quiescent power. To show performance in the audio band, the device was tested with an audio analyzer. THD+N and FFT tests were run at 1-Vrms output voltage. Performance is the same on both 2.7-V and 5-V supply. Figure 81 is the test circuit used, and Figure 82 and Figure 83 show performance of the analyzer. In the FFT plot the harmonic spurs are at the testing limit of the analyzer, which means the THS5432 is actually much better than can be directly measured. Because the THS5432 distortion performance cannot be directly measured in the audio band it is estimated from measurement in high noise gain configuration correlated with simulation.

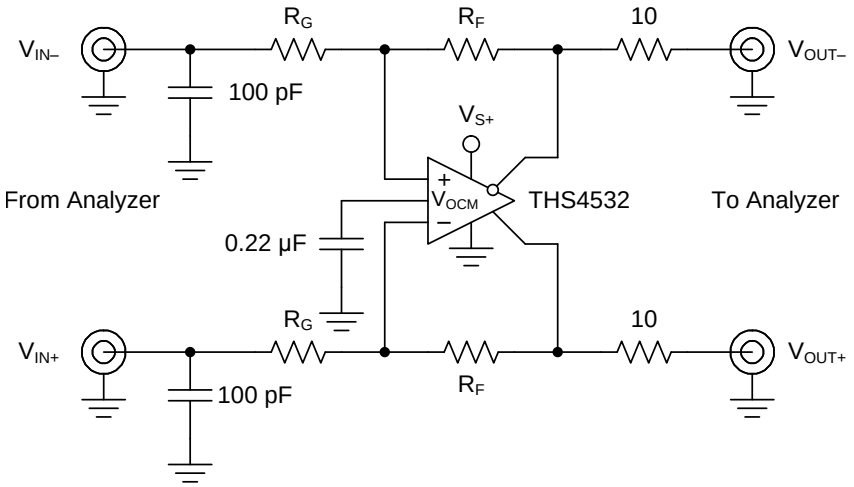

Figure 81. THS5432 Audio Analyzer Test Circuit

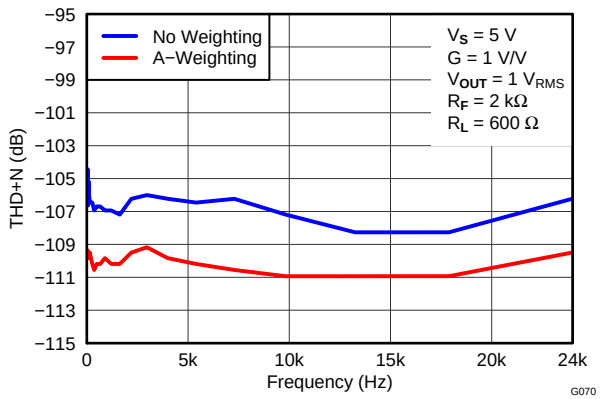

Figure 82. THD+N on Audio Analyzer, 10 Hz to 24 kHz

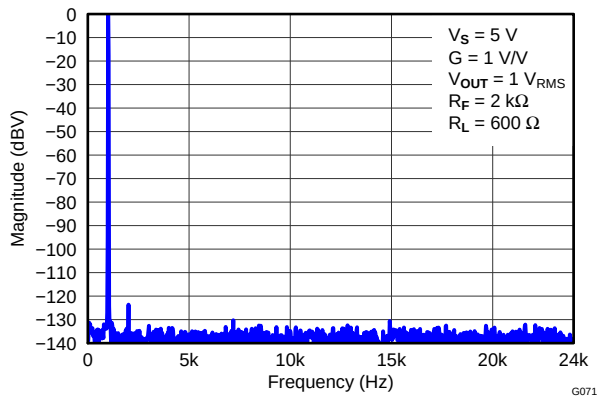

Figure 83. 1-kHz FFT Plot on Audio Analyzer

9.1.11 Audio On and Off Pop Performance

The THS5432 is tested to show on and off pop performance by connecting a speaker between the differential outputs and switching on and off the power supply, and also by using the power down function of the THS5432. Testing was done with and without tones. During these tests no audible pop could be heard.

With no input tone, Figure 84 shows the voltage waveforms when switching power on to the THS5432 and Figure 85 shows voltage waveforms when turning power off. The transients during power on and off show no audible pop should be heard.

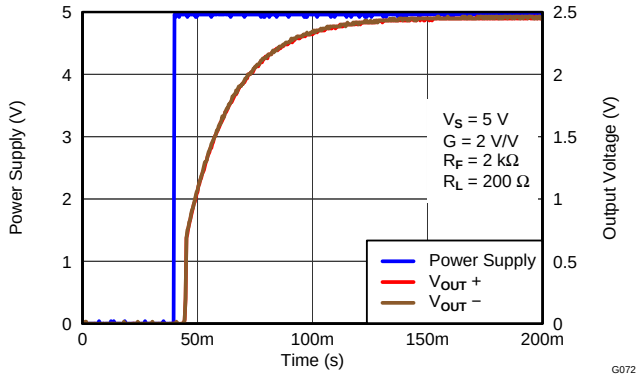

Figure 84. Power Supply Turnon Pop Performance

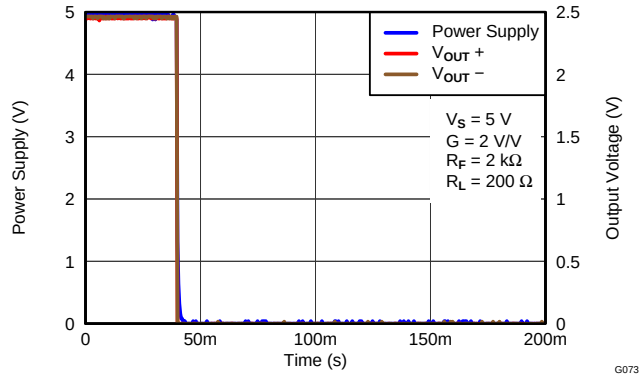

Figure 85. Power Supply Turnoff Pop Performance

With no input tone, Figure 86 shows the voltage waveforms using the $\overline{PD}$ pin to enable and disable the THS5432. The transients during power on and off show no audible pop should be heard.

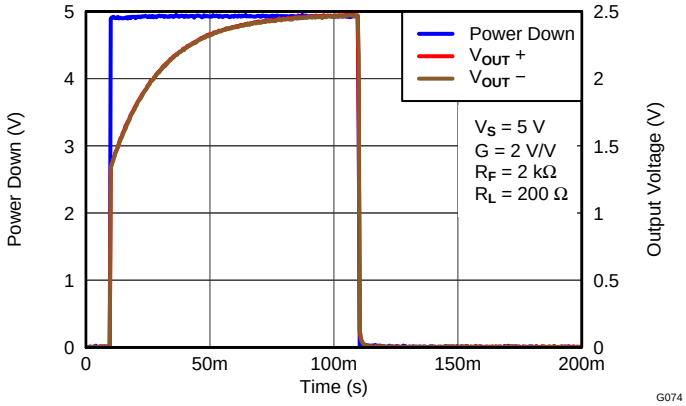

Figure 86. $\overline{PD}$ Enable Pop Performance

Copyright © 2013–2015, Texas Instruments Incorporated

9.2 Typical Applications

The following circuits show application information for the THS5432. For simplicity, power-supply decoupling capacitors are not shown in these diagrams; see the *Layout Guidelines* section for suggested guidelines. For more details on the use and operation of fully-differential amplifiers, refer to the Application Report *Fully-Differential Amplifiers* (SLOA054), available for download from the TI website at www.ti.com.

9.2.1 SAR ADC Performance: THS5432 and ADS8321 Combined Performance

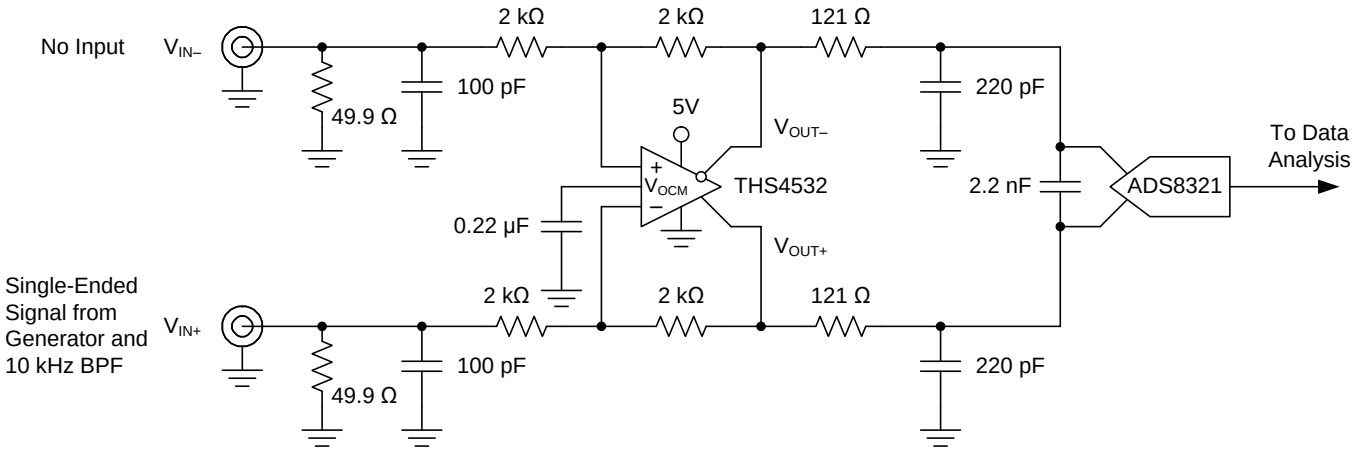

Figure 87. THS5432 and ADS8321 Test Circuit

9.2.1.1 Design Requirements

To show achievable performance with a high performance SAR ADC, the THS5432 is tested as the drive amplifier for the ADS8321. The ADS8321 is a 16-bit, SAR ADC that offers excellent AC and DC performance, with ultra-low power and small size. The circuit shown in Figure 87 is used to test the performance. Data was taken using the ADS8321 at 100 kSPS with input frequency of 10 kHz and signal levels 0.5 dB below full scale. The FFT plot of the spectral performance is in Figure 88. A summary of the FFT analysis results are in Table 6 along with ADS8321 typical data sheet performance at f_S = 100 kSPS. Refer to its data sheet for more information.

9.2.1.2 Detailed Design Procedure

The standard ADS8321 EVM and THS5432 EVM are modified to implement the schematic in Figure 87 and used to test the performance of the THS5432 as a drive amplifier. With single supply +5-V supply the output common-mode of the THS5432 defaults to +2.5 V as required at the input of the ADS8321 so the V_{OCM} input of the THS5432 simply bypassed to GND with 0.22-µF capacitor. The summary of results of the FFT analysis versus typical data sheet performance shown in Table 6 show that the THS5432 will make an excellent drive amplifier for this ADC.

Typical Applications (continued)

9.2.1.3 Application Curve

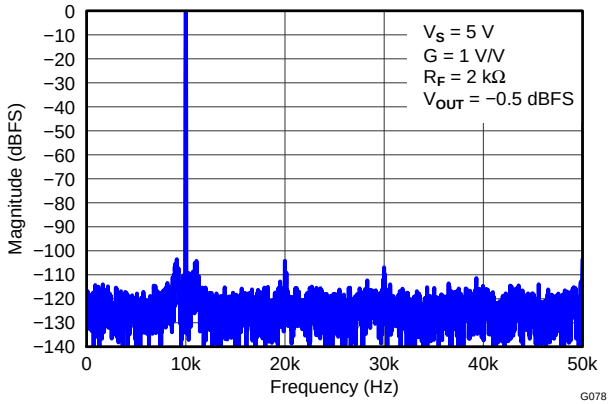

Figure 88. THS5432 + ADS8321 1-kHz FFT

Table 6. 10-kHz FFT Analysis Summary

CONFIGURATION	TONE	SIGNAL	SNR	THD	SINAD	SFDR
THS5432 + ADS8321	10 kHz	–0.5 dBFS	87 dBc	–96 dBc	87 dBc	100 dBc
ADS8321 Data Sheet (typical)	10 kHz	–0.5 dBFS	87 dBc	–86 dBc	84 dBc	86 dBc

9.2.2 Audio ADC Driver Performance: THS5432 and PCM4204 Combined Performance

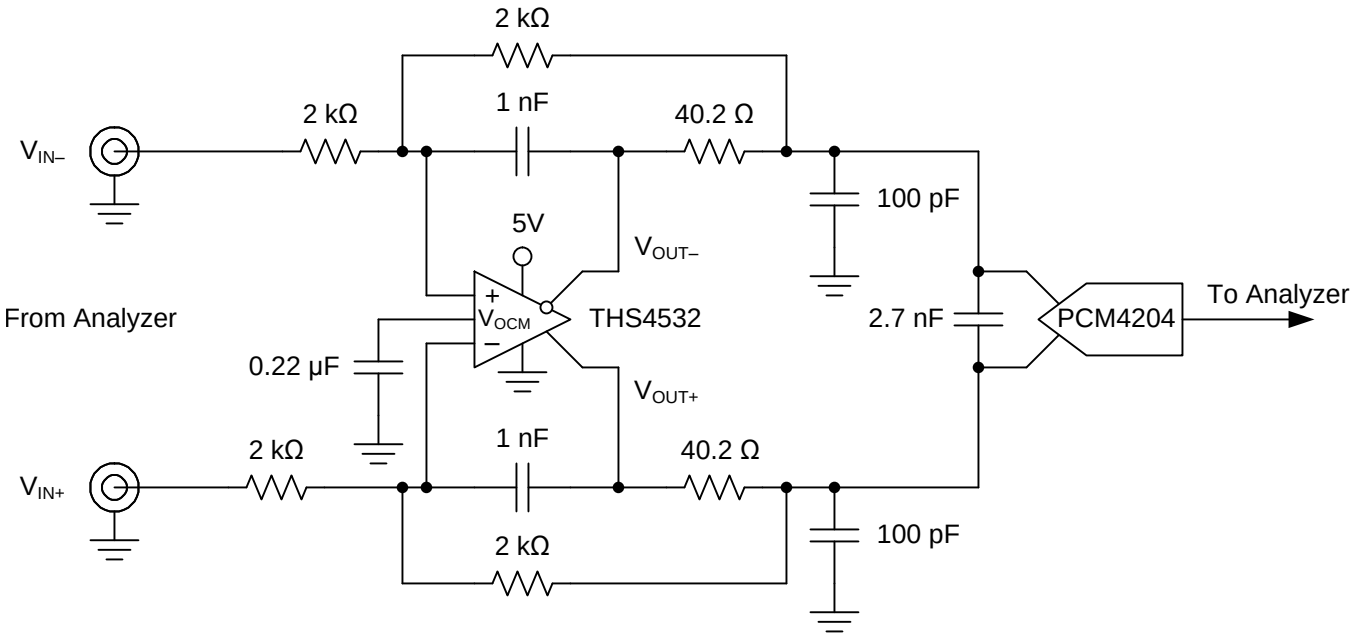

Figure 89. THS5432 and PCM4204 Test Circuit

Copyright © 2013–2015, Texas Instruments Incorporated

9.2.2.1 Design Requirements

To show achievable performance with a high performance audio ADC, the THS5432 is tested as the drive amplifier for the PCM4204. The PCM4204 is a high-performance, four-channel analog-to-digital converter (ADC) designed for professional and broadcast audio applications. The PCM4204 architecture uses a 1-bit delta-sigma modulator per channel incorporating an advanced dither scheme for improved dynamic performance, and supports PCM output data. The PCM4204 provides flexible serial port interface and many other advanced features. Refer to the PCM4204 data sheet for more information. Figure 89 shows the circuit.

9.2.2.2 Detailed Design Procedure

The PCM4204 EVM is used to test the audio performance of the THS5432 as a drive amplifier. The standard PCM4204 EVM is provided with 4x OPA1632 fully-differential amplifiers, which use the same pin out as the THS5432. For testing, one of these amplifiers is replaced with a THS5432 device in same package (MSOP), gain changed to 1 V/V, and power supply changed to single supply 5 V. With single supply +5-V supply the output common-mode of the THS5432 defaults to 2.5 V as required at the input of the PCM4204. So the resistor connecting the V_{OCM} input of the THS5432 to the input common-mode drive from the PCM4204 is optional and no performance change was noted with it connected or removed. The EVM power connections were modified by connecting positive supply inputs, 15 V, 5 VA, and 5 VD, to a 5-V external power supply (EXT 3.3 was not used) and connecting –15 V and all ground inputs to ground on the external power supply so only one external 5-V supply was needed to power all devices on the EVM.

An audio analyzer is used to provide an analog audio input to the EVM and the PCM formatted digital output is read by the digital input on the analyzer. Data was taken at f_S = 96 kHz, and audio output uses PCM format. Other data rates and formats are expected to show similar performance in line with that shown in the data sheet.

9.2.2.3 Application Curves

Figure 90 shows the THD+N vs Frequency with no weighting and Figure 91 shows an FFT with 1-kHz input tone. Input signal to the PCM4204 for these tests is –0.5 dBFS. Table 7 summarizes results of testing using the THS5432 + PCM4204 versus typical Data Sheet performance, and show it make an excellent drive amplifier for this ADC.

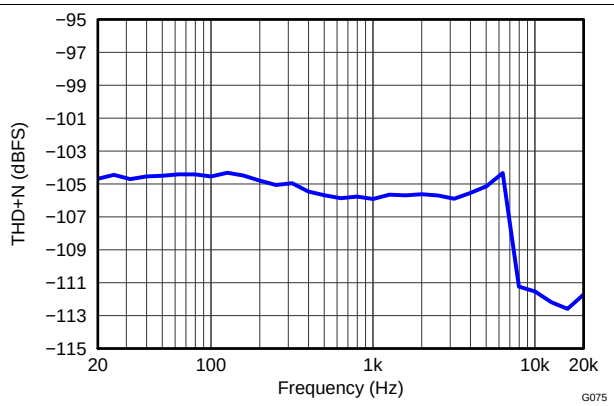

Figure 90. THS5432 + PCM4204 THD+N vs Frequency With No Weighting

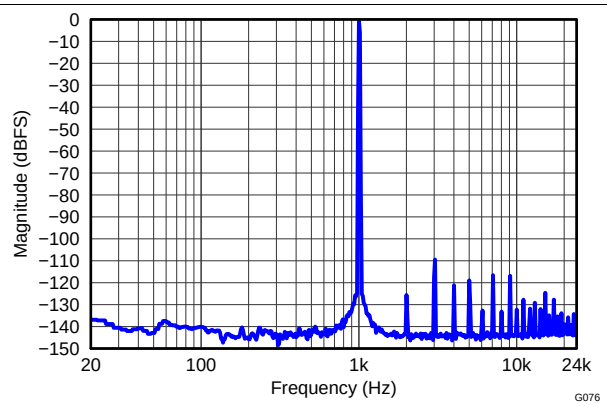

Figure 91. THS5432 + PCM4204 1-kHz FFT

Table 7. 1-kHz AC Analysis: Test Circuit versus PCM4204 Data Sheet Typical Specifications (f_S = 96 kSPS)

CONFIGURATION	TONE	THD + N
THS5432 + PCM4204	1 kHz	–106 dB
PCM4204 Data Sheet (typical)	1 kHz	–103 dB

9.2.3 SAR ADC Performance: THS5432 and ADS7945 Combined Performance

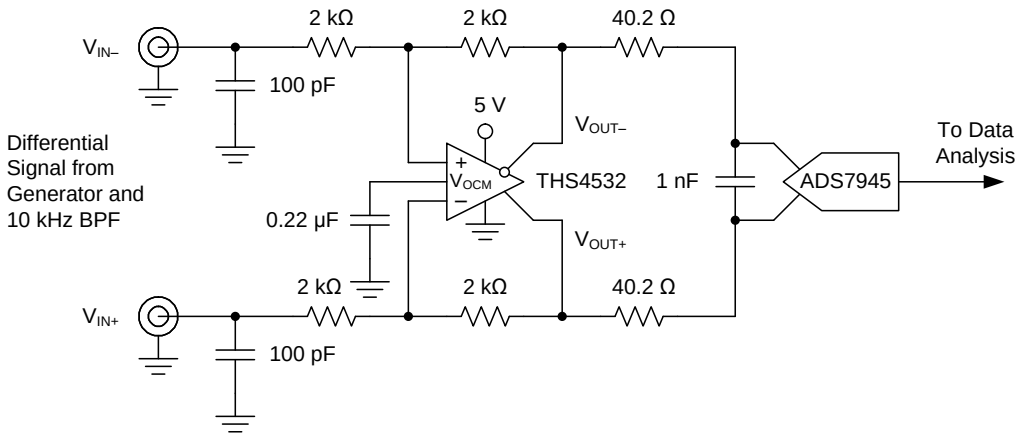

Figure 92. THS5432 and ADS7945 Test Circuit

9.2.3.1 Design Requirements

To show achievable performance with a high performance SAR ADC, the THS5432 is tested as the drive amplifier for the ADS7945. The ADS7945 is a 14-bit, SAR ADC that offers excellent AC and DC performance, with low power and small size. The circuit shown in Figure 92 is used to test the performance. Data was taken using the ADS7945 at 2MSPS with input frequency of 10 kHz and signal level 0.5 dB below full scale. The FFT plot of the spectral performance is in Figure 93. A summary of the FFT analysis results are in Table 8 along with ADS7945 typical data sheet performance at f_S = 2 MSPS. Refer to the data sheet for more information.

9.2.3.2 Detailed Design Procedure

The standard ADS7945 EVM and THS5432 EVM are modified to implement the schematic in Figure 92 and used to test the performance of the THS5432 as a drive amplifier. With single supply 5 V supply the output common-mode of the THS5432 defaults to +2.5 V as required at the input of the ADS7945 so the V_{OCM} input of the THS5432 simply bypassed to GND with 0.22-µF capacitor. The summary of results of the FFT analysis versus typical data sheet performance shown in Table 8 show that the THS5432 will make an excellent drive amplifier for this ADC.

9.2.3.3 Application Curve

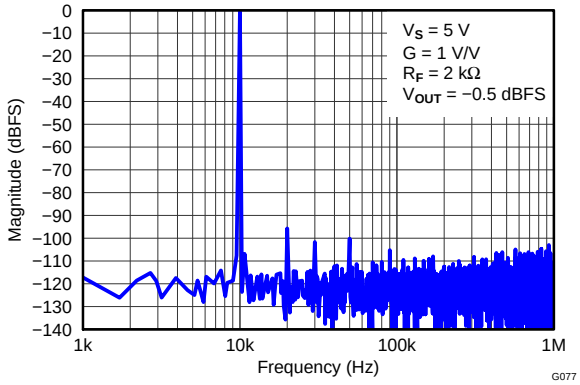

Figure 93. THS5432 and ADS7945 Test Circuit

Table 8. 10-kHz FFT Analysis Summary

CONFIGURATION	TONE	SIGNAL	SNR	THD	SFDR
THS5432 + ADS7945	10 kHz	–0.5 dBFS	83 dBc	–93 dBc	96 dBc
ADS7945 Data Sheet (typ)	10 kHz	–0.5 dBFS	84 dBc	–92 dBc	94 dBc

Copyright © 2013–2015, Texas Instruments Incorporated

9.3 Systems Examples

9.3.1 Differential-Input to Differential-Output Amplifier

The THS5432 is a fully-differential amplifier and can be used to amplify differential input signals to differential output signals. A basic block diagram of the circuit is shown in Figure 94 (V_{OCM} and $\overline{PD}$ inputs not shown). The gain of the circuit is set by R_F divided by R_G.

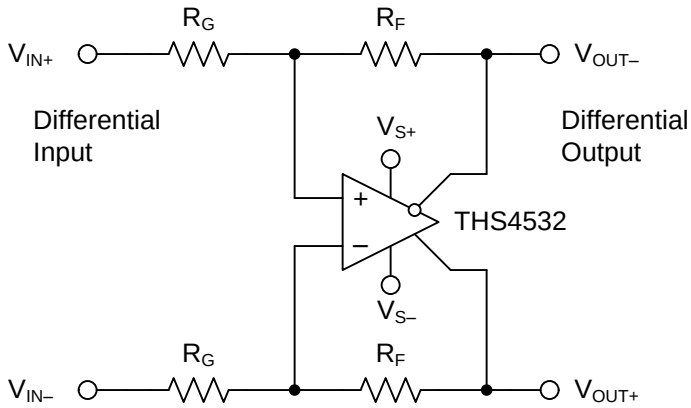

Figure 94. Differential Input to Differential Output Amplifier

9.3.1.1 AC-Coupled, Differential-Input to Differential-Output Design Issues

There are two typical ways to use the THS5432 family with an AC-coupled differential source. In the first method, the source is differential and can be coupled in through two blocking capacitors. The second method uses either a single-ended or a differential source and couples in through a transformer (or balun). Figure 95 shows a typical blocking capacitor approach to a differential input. An optional differential-input termination resistor (R_M) is included in this design. This R_M element allows the input R_G resistors to be scaled up while still delivering lower differential input impedance to the source. In this example, the R_G elements sum to show a 500-Ω differential impedance, while the R_M element combines in parallel to give a net 100-Ω, AC-coupled, differential impedance to the source. Again, the design proceeds ideally by selecting the R_F element values, then the R_G to set the differential gain, then an R_M element (if needed) to achieve the target input impedance. Alternatively, the R_M element can be eliminated, the R_G elements set to the desired input impedance, and R_F set to the get the differential gain (R_F / R_G).

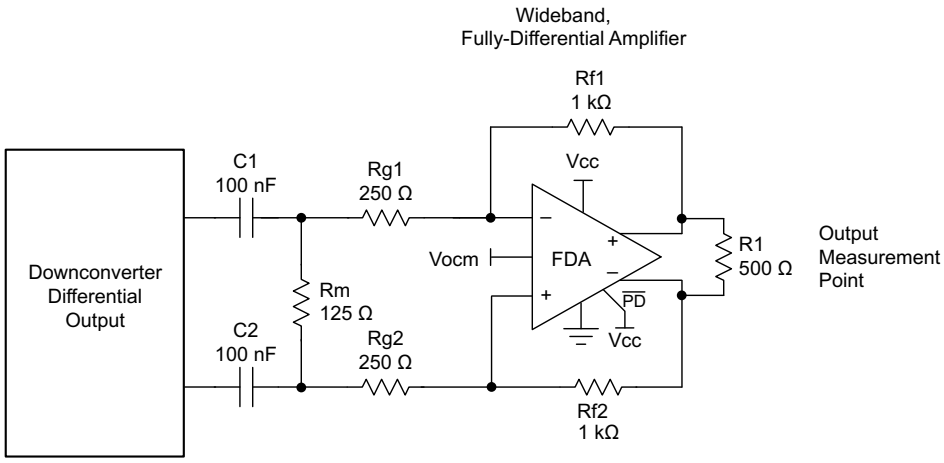

Figure 95. Example Down-Converting Mixer Delivering an AC-Coupled Differential Signal to the THS5432

The DC biasing here is very simple. The output V_{OCM} is set by the input control voltage; and because there is no DC-current path for the output common-mode voltage, that DC bias also sets the input pins common-mode operating points.

Systems Examples (continued)

9.3.2 Single-Ended to Differential FDA Configuration

9.3.2.1 Input Impedance

The designs so far have included a source impedance, R_S, that must be matched by R_T and R_{G1}. The total impedance at the junction of R_T and R_{G1} for the circuit of Figure 99 is the parallel combination of R_T to ground, and the ZA (active impedance) presented by R_{G1}. The expression for ZA, assuming R_{G2} is set to obtain the differential divider balance, is given by Equation 5:

$$ZA = R_{G1} \frac{\left(1 + \frac{R_{G1}}{R_{G2}}\right)\left(1 + \frac{R_F}{R_{G1}}\right)}{2 + \frac{R_F}{R_{G2}}} \tag{5}$$

For designs that do not need impedance matching, for instance where the input is driven from the low-impedance output of another amplifier, $R_{G1} = R_{G2}$ is the single-to-differential design used without an R_T to ground. Setting $R_{G1} = R_{G2} = R_G$ in Equation 5 produces Equation 6, which is the input impedance of a simple-input FDA driven from a low-impedance, single-ended source.

$$ZA = 2R_G \frac{\left(1 + \frac{R_F}{R_G}\right)}{2 + \frac{R_F}{R_G}} \tag{6}$$

In this case, setting a target gain as $R_F / R_G \equiv \alpha$, and then setting the desired input impedance allows the R_G element to be resolved first. Then the R_F is set to get the target gain. For example, targeting an input impedance of 200 Ω with a gain of 4 V/V, Equation 7 calculates the R_G value. Multiplying this required R_G value by a gain of 4 gives the R_F value and the design of Figure 96.

$$R_G = ZA \frac{2 + \alpha}{2(1 + \alpha)} \tag{7}$$

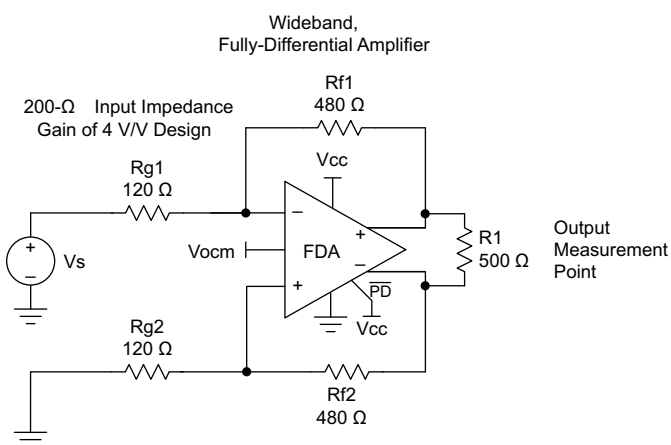

Figure 96. 200-Ω Input Impedance, Single-Ended to Differential DC-Coupled Design With Gain of 4 V/V

After being designed, this circuit can also be AC-coupled by adding blocking caps in series with the two 120-Ω R_G resistors. This active input impedance has the advantage of increasing the apparent load to the prior stage using lower resistors values, leading to lower output noise for a given gain target.

Copyright © 2013–2015, Texas Instruments Incorporated

Systems Examples (continued)

9.3.3 Single-Ended Input to Differential Output Amplifier

The THS5432 can also be used to amplify and convert single-ended input signals to differential output signals. A basic block diagram of the circuit is shown in Figure 97 (V_{OCM} and $\overline{PD}$ inputs not shown). The gain of the circuit is again set by R_F divided by R_G.

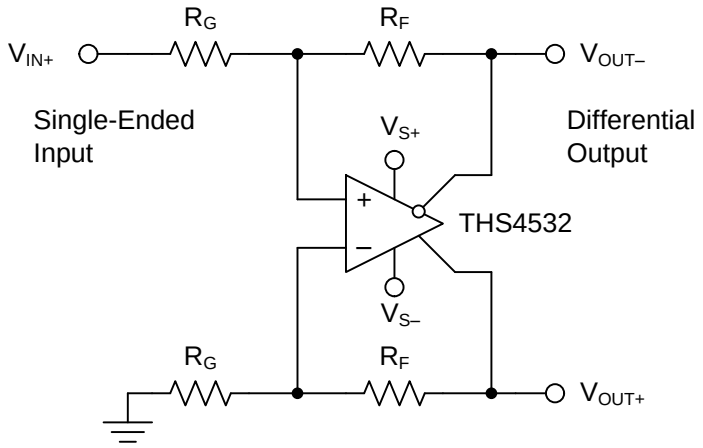

Figure 97. Single-Ended Input to Differential Output Amplifier

Systems Examples (continued)

9.3.3.1 AC-Coupled Signal Path Considerations for Single-Ended Input to Differential Output Conversion

When the signal path can be AC-coupled, the DC biasing for the THS5432 family becomes a relatively simple task. In all designs, start by defining the output common-mode voltage. The AC-coupling issue can be separated for the input and output sides of an FDA design. The input can be AC-coupled and the output DC-coupled, or the output can be ac-coupled and the input dc-coupled, or they can both be AC-coupled.

One situation where the output might be DC-coupled (for an AC-coupled input), is when driving directly into an ADC where the V_{OCM} control voltage uses the ADC common-mode reference to directly bias the FDA output common-mode to the required ADC input common-mode. In any case, the design starts by setting the desired V_{OCM}.

When an AC-coupled path follows the output pins, the best linearity is achieved by operating V_{OCM} at midsupply. The V_{OCM} voltage must be within the linear range for the common-mode loop, as specified in the headroom specifications (approximately 0.91 V greater than the negative supply and 1.1 V less than the positive supply). If the output path is also ac-coupled, simply letting the V_{OCM} control pin float is usually preferred to get a midsupply default V_{OCM} bias with minimal elements. To limit noise, place a 0.1-µF decoupling capacitor on the V_{OCM} pin to ground.

After V_{OCM} is defined, check the target output voltage swing to ensure that the V_{OCM} plus the positive and negative output swing on each side do not clip into the supplies. If the desired output differential swing is defined as V_{OPP}, divide by 4 to obtain the $\pm V_P$ swing around V_{OCM} at each of the two output pins (each pin operates 180° out of phase with the other). Check that V_{OCM} $\pm V_P$ does not exceed the absolute supply rails for this rail-to-rail output (RRO) device.

Going to the device input pins side, because both the source and balancing resistor on the nonsignal input side are DC-blocked (see Figure 98), no common-mode current flows from the output common-mode voltage, thus setting the input common-mode equal to the output common-mode voltage.

This input headroom also sets a limit for higher V_{OCM} voltages. Because the input V_{ICM} is the output V_{OCM} for ac-coupled sources, the 1.2-V minimum headroom for the input pins to the positive supply overrides the 1.1-V headroom limit for the output V_{OCM}. Also, the input signal moves this input V_{ICM} around the dc bias point, as described in the section *Resistor Design Equations for the Single-Ended to Differential Configuration of the FDA*.

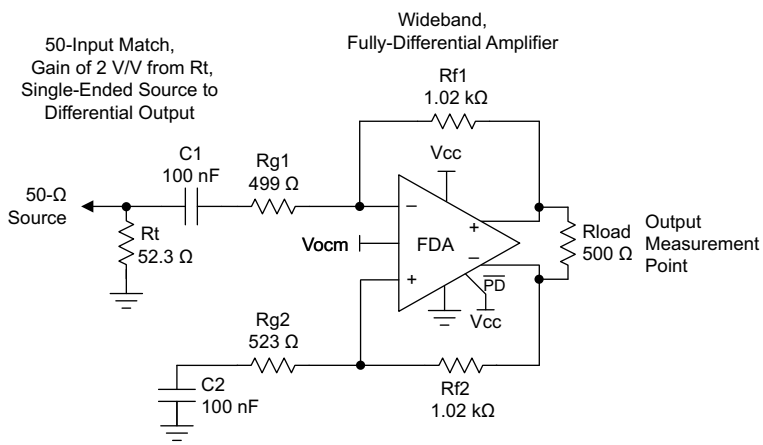

Figure 98. AC-Coupled, Single-Ended Source to a Differential Gain of 2 V/V Test Circuit

Copyright © 2013–2015, Texas Instruments Incorporated

Systems Examples (continued)

9.3.3.2 DC-Coupled Input Signal Path Considerations for Single-Ended to Differential Conversion

The output considerations remain the same as for the AC-coupled design. Again, the input can be DC-coupled while the output is AC-coupled. A DC-coupled input with an AC-coupled output might have some advantages to move the input V_{ICM} down if the source is ground referenced. When the source is DC-coupled into the THS5432 family (see Figure 99), both sides of the input circuit must be DC-coupled to retain differential balance. Normally, the nonsignal input side has an R_G element biased to whatever the source midrange is expected to be. Providing this midscale reference gives a balanced differential swing around V_{OCM} at the outputs.

Often, R_{G2} is simply grounded for DC-coupled, bipolar-input applications. This configuration gives a balanced differential output if the source is swinging around ground. If the source swings from ground to some positive voltage, grounding R_{G2} gives a unipolar output differential swing from both outputs at V_{OCM} (when the input is at ground) to one polarity of swing. Biasing R_{G2} to an expected midpoint for the input signal creates a differential output swing around V_{OCM}.

One significant consideration for a DC-coupled input is that V_{OCM} sets up a common-mode bias current from the output back through R_F and R_G to the source on both sides of the feedback. Without input balancing networks, the source must sink or source this DC current. After the input signal range and biasing on the other R_G element is set, check that the voltage divider from V_{OCM} to V_{IN} through R_F and R_G (and possibly R_S) establishes an input V_{ICM} at the device input pins that is in range.

If the average source is at ground, the negative rail input stage for the THS5432 family is in range for applications using a single positive supply and a positive output V_{OCM} setting because this DC current lifts the average FDA input summing junctions up off of ground to a positive voltage (the average of the V+ and V– input pin voltages on the FDA).

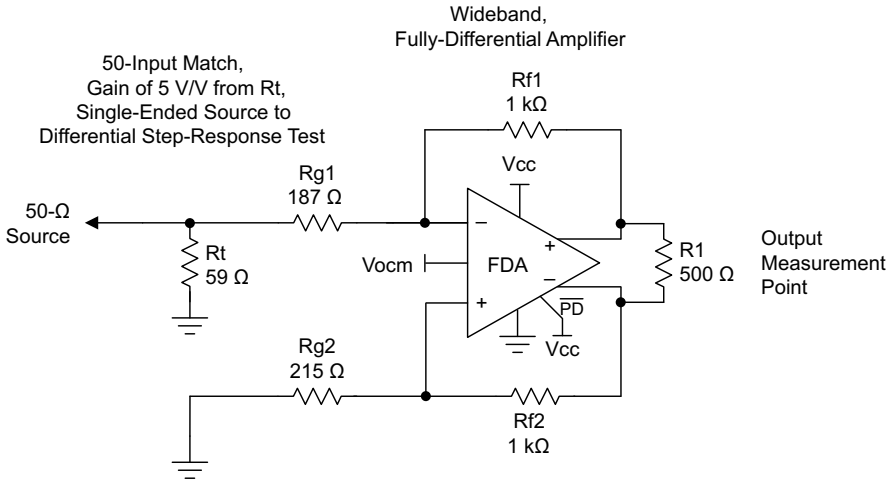

Figure 99. DC-Coupled, Single-Ended-to-Differential, Set for a Gain of 5 V/V

9.3.3.3 Resistor Design Equations for the Single-Ended to Differential Configuration of the FDA

The design equations for setting the resistors around an FDA to convert from a single-ended input signal to differential output can be approached from several directions. Here, several critical assumptions are made to simplify the results:

- The feedback resistors are selected first and set equal on the two sides.
- The DC and AC impedances from the summing junctions back to the signal source and ground (or a bias voltage on the nonsignal input side) are set equal to retain feedback divider balance on each side of the FDA.

Both of these assumptions are typical for delivering the best dynamic range through the FDA signal path.

Systems Examples (continued)

After the feedback resistor values are chosen, the aim is to solve for the R_T (a termination resistor to ground on the signal input side), R_{G1} (the input gain resistor for the signal path), and R_{G2} (the matching gain resistor on the nonsignal input side); see Figure 98 and Figure 99. The same resistor solutions can be applied to either AC- or DC-coupled paths. Adding blocking capacitors in the input-signal chain is a simple option. Adding these blocking capacitors after the R_T element (as shown in Figure 98) has the advantage of removing any DC currents in the feedback path from the output V_{OCM} to ground.

Earlier approaches to the solutions for R_T and R_{G1} (when the input must be matched to a source impedance, R_S) follow an iterative approach. This complexity arises from the active input impedance at the R_{G1} input. When the FDA is used to convert a single-ended signal to differential, the common-mode input voltage at the FDA inputs must move with the input signal to generate the inverted output signal as a current in the R_{G2} element. A more recent solution is shown as Equation 8, where a quadratic in R_T can be solved for an exact value. This quadratic emerges from the simultaneous solution for a matched input impedance and target gain. The only inputs required are:

- The selected R_F value.
- The target voltage gain (A_v) from the input of R_T to the differential output voltage.
- The desired input impedance at the junction of R_T and R_{G1} to match R_S.

Solving this quadratic for R_T starts the solution sequence, as shown in Equation 8:

$$R_T^2 - R_T \frac{2R_S\left(2R_F + \frac{R_S}{2}A_V^2\right)}{2R_F(2 + A_V) - R_S A_V(4 + A_V)} - \frac{2R_F R_S^2 A_V}{2R_F(2 + A_V) - R_S A_V(4 + A_V)} = 0 \tag{8}$$

Being a quadratic, there are limits to the range of solutions. Specifically, after R_F and R_S are chosen, there is physically a maximum gain beyond which Equation 8 starts to solve for negative R_T values (if input matching is a requirement). With R_F selected, use Equation 9 to verify that the maximum gain is greater than the desired gain.

$$A_{V(MAX)} = \left(\frac{R_F}{R_S} - 2\right) \times \left[1 + \sqrt{1 + \frac{4\frac{R_F}{R_S}}{\left(\frac{R_F}{R_S} - 2\right)^2}}\right] \tag{9}$$

If the achievable $A_{V(MAX)}$ is less than desired, increase the R_F value. After R_T is derived from Equation 8, the R_{G1} element is given by Equation 10:

$$R_{G1} = \frac{2\frac{R_F}{A_V} - R_S}{1 + \frac{R_S}{R_T}} \tag{10}$$

Then, the simplest approach is to use a single $R_{G2} = R_T \parallel R_S + R_{G1}$ on the nonsignal input side. Often, this approach is shown as the separate R_{G1} and R_S elements. Using these separate elements provides a better divider match on the two feedback paths, but a single R_{G2} is often acceptable. A direct solution for R_{G2} is given as Equation 11:

$$R_{G2} = \frac{2\frac{R_F}{A_V}}{1 + \frac{R_S}{R_T}} \tag{11}$$

This design proceeds from a target input impedance matched to R_S, signal gain A_v from the matched input to the differential output voltage, and a selected R_F value. The nominal R_F value chosen for the THS5432 family characterization is 2 kΩ. As discussed previously, going lower improves noise and phase margin, but reduces the total output load impedance possibly degrading harmonic distortion. Going higher increases the output noise, and might reduce the loop-phase margin because of the feedback pole to the input capacitance, but reduces the total loading on the outputs.

Copyright © 2013–2015, Texas Instruments Incorporated

Systems Examples (continued)

Using Equation 9 to Equation 11 to sweep the target gain from 1 to $A_{V(MAX)}$ < 10 V/V gives Table 9, which shows exact values for R_T, R_{G1}, and R_{G2}, where a 50-Ω source must be matched while setting the two feedback resistors to 2 kΩ. One possible solution for 1% standard values is shown, and the resulting actual input impedance and gain with % errors to the targets are also shown in Table 9.

Table 9. Rf = 2 kΩ, Matched Input to 50 Ω, Gain of 1 to 10-V/V Single-Ended to Differential(1)

Av	Rt, EXACT (Ω)	Rt 1%	Rg1, EXACT (Ω)	Rg1 1%	Rg2, EXACT (Ω)	Rg2 1%	ACTUAL Z_{IN}	%ERR TO Rs	ACTUAL GAIN	%ERR TO Av
1	51	51.1	1996.5	2000	2021.8	2000	50.1	0.3	0.998	–0.2
2	51.7	52.3	996.9	1000	1022.5	1020	50.5	1.0	1.994	–0.3
3	52.5	52.3	656.1	649	681.7	681	49.7	–0.5	3.032	1.1
4	53.2	53.6	491.5	487	517.4	523	50.2	0.4	4.035	0.9
5	54	53.6	388	392	413.9	412	49.6	–0.9	4.953	–0.9
6	54.7	54.9	322.7	324	348.9	348	49.9	–0.2	5.978	–0.4
7	55.5	54.9	272.9	274	299.1	301	49.1	–1.7	6.974	–0.4
8	56.3	56.2	238.1	237	264.6	267	49.3	–1.3	8.034	0.4
9	57.1	57.6	211.2	210	237.9	237	49.7	–0.6	9.044	0.5
10	57.9	57.6	187.4	187	214.1	215	48.9	–2.3	10.017	0.2

(1) R_F = 2 kΩ, R_S = 50 Ω.

These equations and design flow apply to any FDA. Using the feedback resistor value as a starting point is particularly useful for current-feedback-based FDAs such as the LMH6554, where the value of these feedback resistors determines the frequency response flatness. Similar tables can be built using the equations provided here for other source impedances, R_F values, and gain ranges.

The TINA model correctly shows this actively-set input impedance in the single-ended to differential configuration, and is a good tool to validate the gains, input impedances, response shapes, and noise issues.

9.3.4 Differential Input to Single-Ended Output Amplifier

Fully-differential amplifiers like the THS5432 are not recommended for differential to single-ended conversion. This application is best performed with an instrumentation amplifier or with a standard amplifier configured as a classic differential amplifier. See application section of the OPA835 data sheet (SLOS713).

10 Power Supply Recommendations

The THS4532 is principally intended to operate with a nominal single-supply voltage of 3 V to 5 V. Supply-voltage tolerances are supported with the specified operating range of 2.5 V (10% low on a 3-V nominal supply) and 5.5 V (8% high on a 5-V nominal supply). Supply decoupling is required, as described in *Application and Implementation*. Split (or bipolar) supplies can be used with the THS4532, as long as the total value across the device remains less than 5.5 V (absolute maximum).

Using a negative supply to deliver a true swing to ground output in driving SAR ADCs may be desired. While the THS4532 quotes a rail-to-rail output, linear operation requires approximately a 200-mV headroom to the supply rails. One easy option for extending the linear output swing to ground is to provide the small negative supply voltage required using the LM7705 fixed –230-mV, negative-supply generator. This low-cost, fixed negative-supply generator accepts the 3- to 5-V positive supply input used by the THS4532 and provides a –230-mV supply for the negative rail. Using the LM7705 provides an effective solution, as shown in the *Extending Rail-to-Rail Output Range for Fully Differential Amplifiers to Include True Zero Volts*, TI Designs TIDU187.

11 Layout

11.1 Layout Guidelines

The THS4532 EVM (SLOU356) should be used as a reference when designing the circuit board. TI recommends following the EVM layout of the external components near to the amplifier, ground plane construction, and power routing as closely as possible. General guidelines are:

1. Signal routing should be direct and as short as possible into and out of the amplifier.
2. The feedback path should be short and direct avoiding vias if possible.
3. Ground or power planes should be removed from directly under the amplifier's input and output pins.
4. A series output resistor is recommended to be placed as near to the output pin as possible. See Figure 79 for recommended values given expected capacitive load of design.
5. A 2.2-µF power supply decoupling capacitor should be placed within 2 inches of the device and can be shared with other amplifiers. For split supply, a capacitor is required for both supplies.
6. A 0.1-µF power supply decoupling capacitor should be placed as near to the power supply pins as possible. Preferably within 0.1 inch. For split supply, a capacitor is required for both supplies.
7. The $\overline{PD}$ pin uses TTL logic levels referenced to the negative supply voltage (V_{S-}). When not used it should tied to the positive supply to enable the amplifier. When used, it must be actively driven high or low and should not be left in an indeterminate logic state. A bypass capacitor is not required, but can be used for robustness in noisy environments.

Copyright © 2013–2015, Texas Instruments Incorporated

11.2 Layout Example

Figure 100 through Figure 103 illustrate the PCB layers of the EVM.

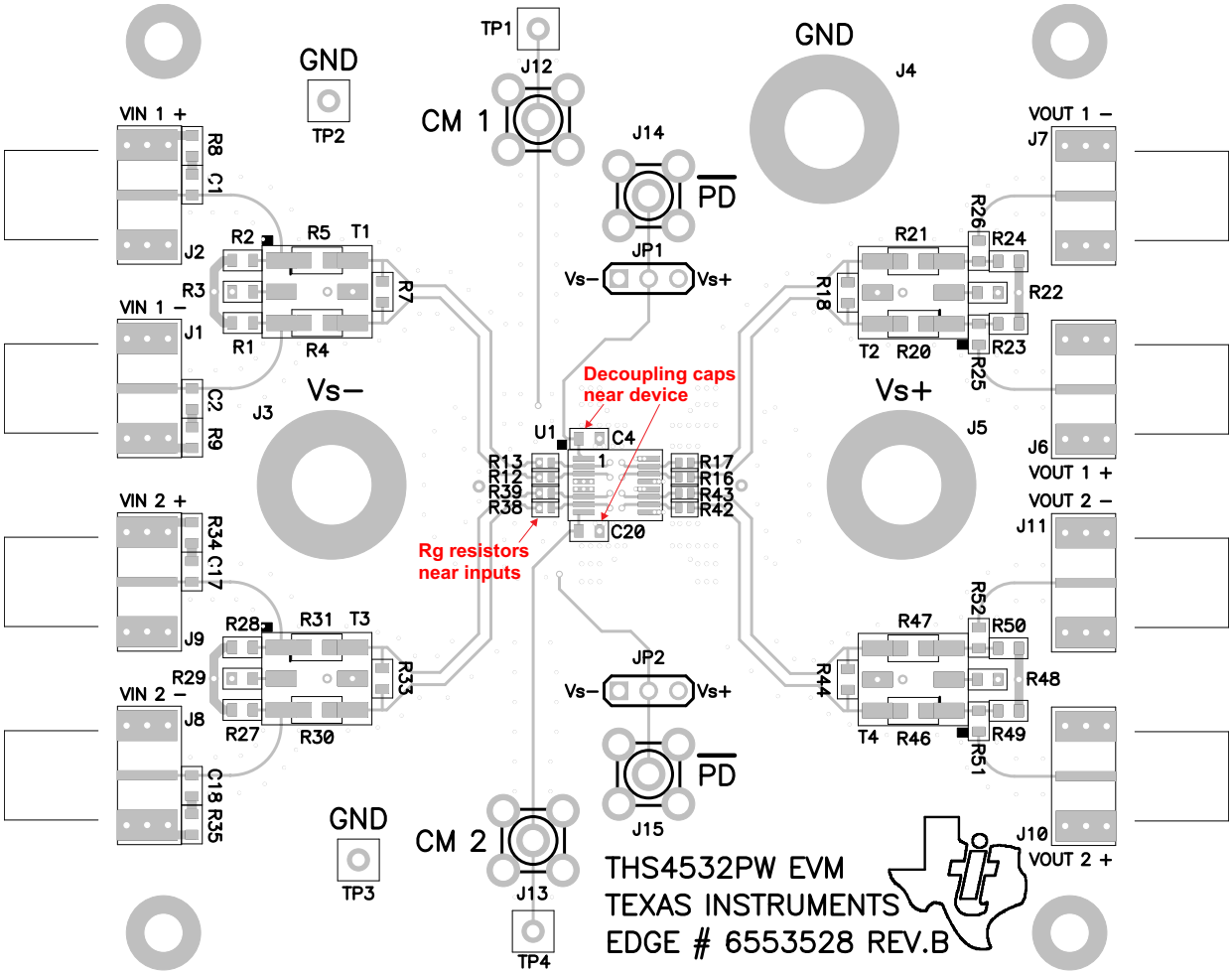

Figure 100. THS4532 EVM Top Layer 1

Layout Example (continued)

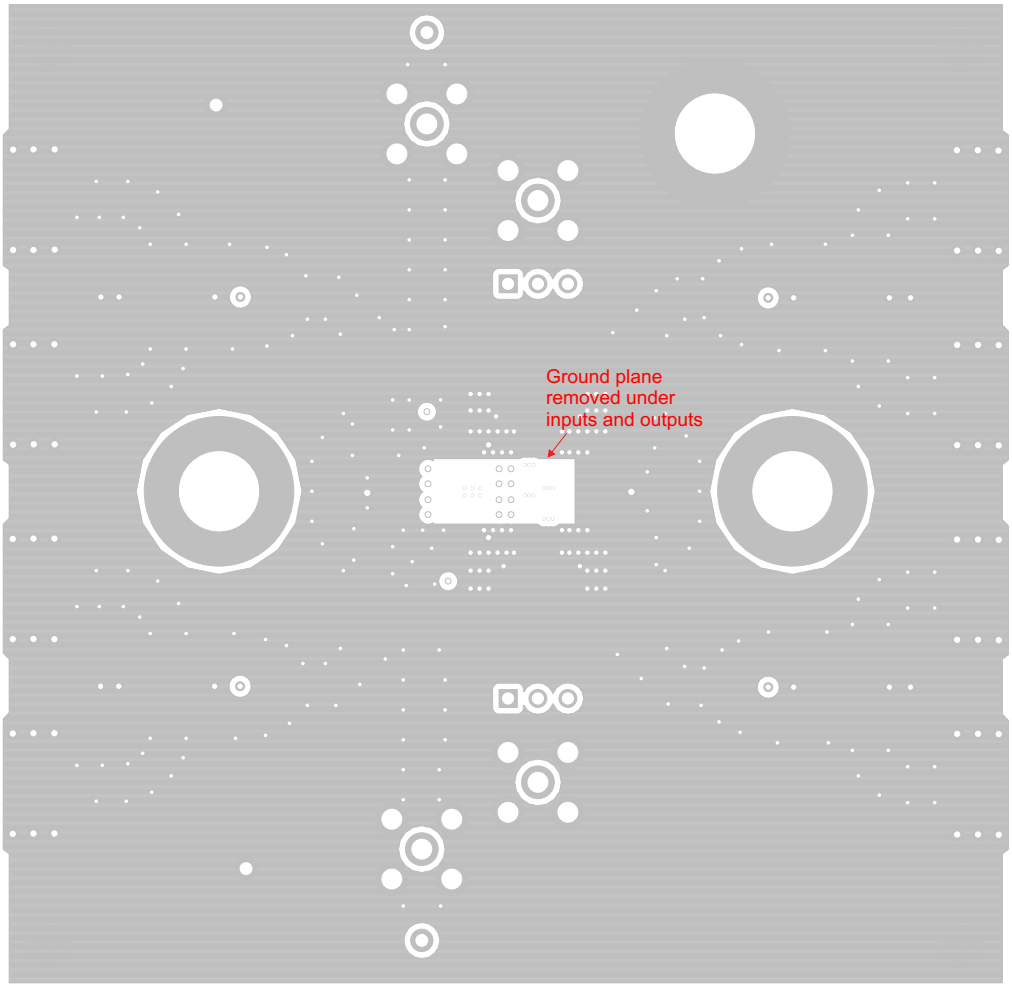

Figure 101. THS4532 EVM Ground Layer 2

Copyright © 2013–2015, Texas Instruments Incorporated

Layout Example (continued)

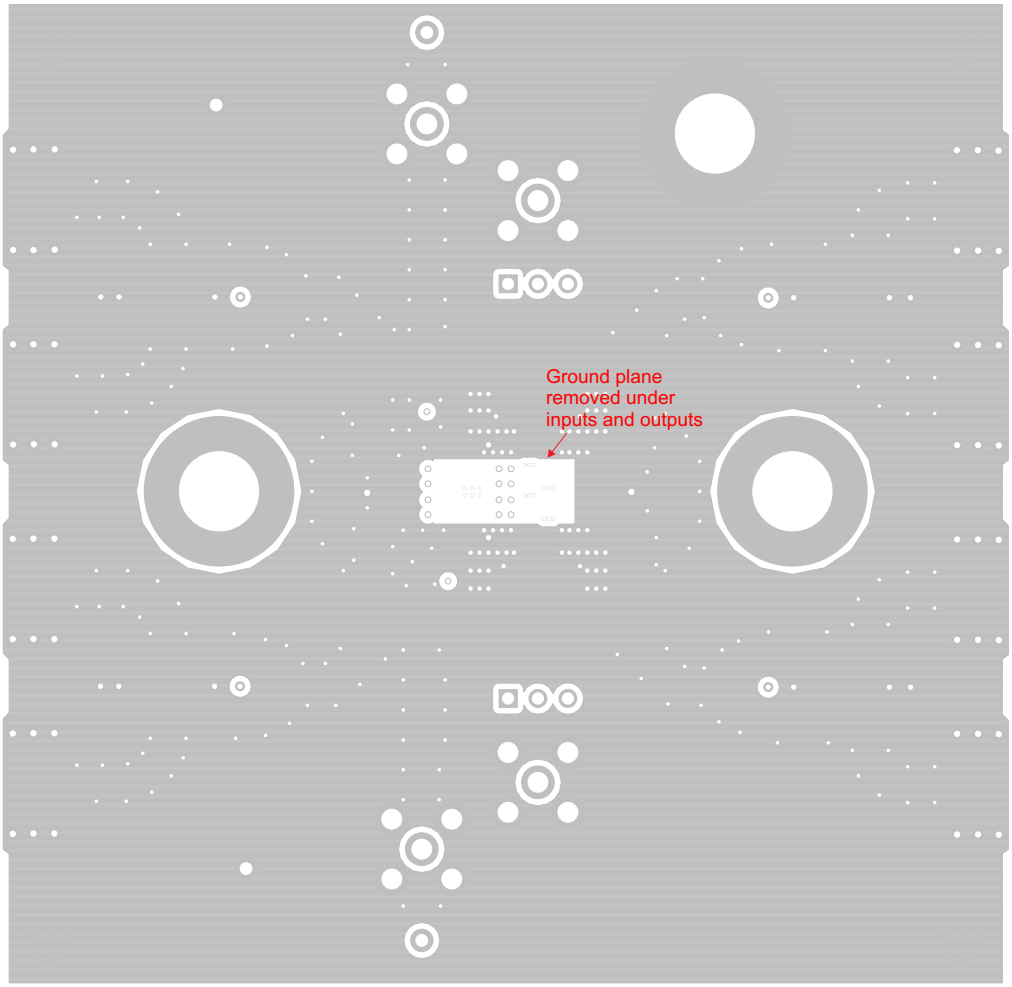

Figure 102. THS4532 EVM Ground Layer 3

Layout Example (continued)

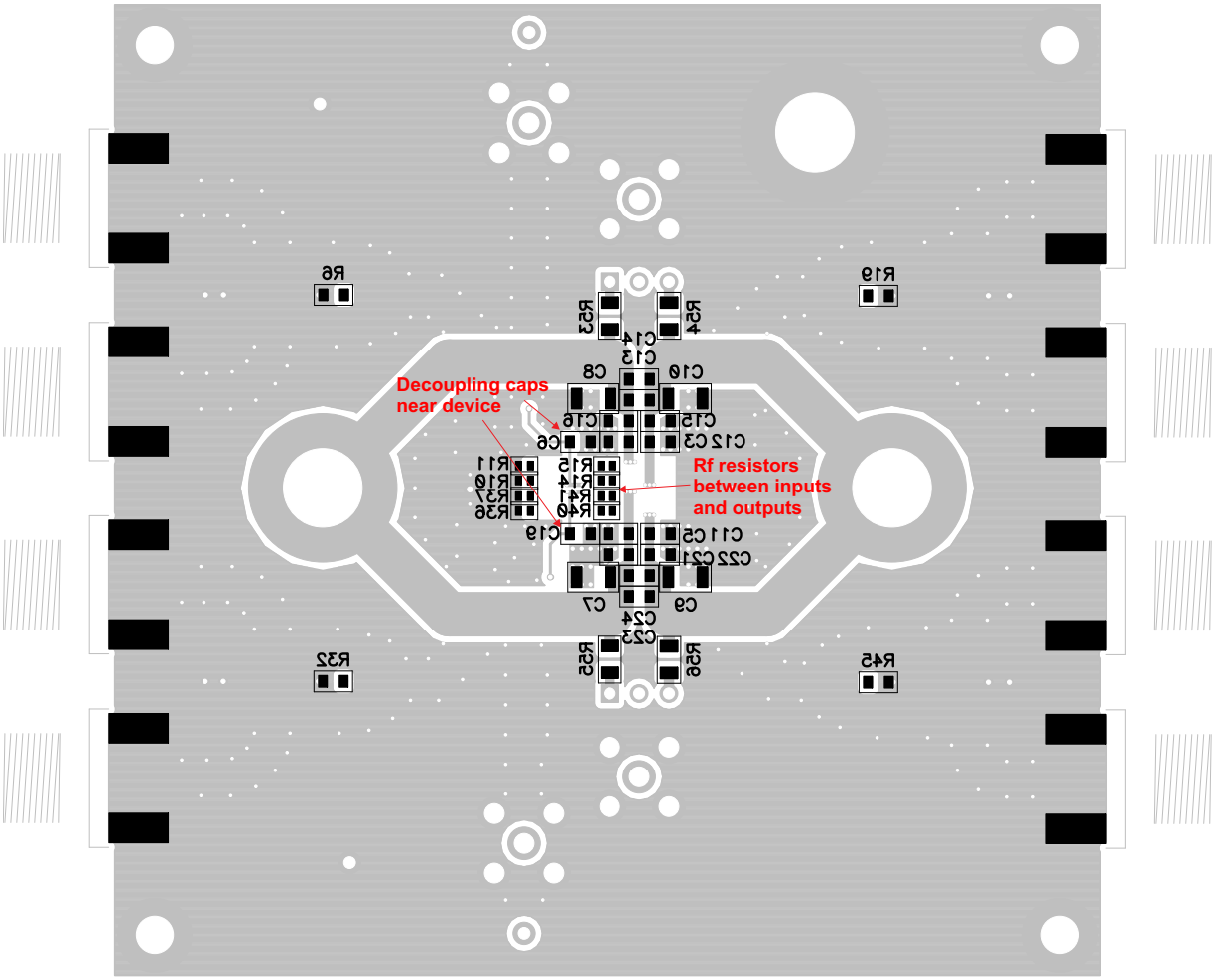

Figure 103. THS4532 EVM Bottom Layer 4

Copyright © 2013–2015, Texas Instruments Incorporated

12 Device and Documentation Support

12.1 Documentation Support

16-Bit, High Speed, MicroPower Sampling Analog-to-Digital Converter, SBAS123

PCM4204: High Performance 24-Bit, 216kHz Sampling Four-Chan Audio A/D Converter, SBAS327

14-Bit, 2-MSPS, Dual-Channel, Differential/Single-Ended, Ultralow-Power ADCs, SBAS539

Fully-Differential Amplifiers, SLOA054

Ultra Low-Power, Rail-to-Rail Out, Negative Rail In, VFB Op Amp, SLOS713

THS4532 EVM Evaluation Module, SLOU358

12.2 Community Resources

The following links connect to TI community resources. Linked contents are provided "AS IS" by the respective contributors. They do not constitute TI specifications and do not necessarily reflect TI's views; see TI's Terms of Use.

TI E2E™ Online Community ***TI's Engineer-to-Engineer (E2E) Community.*** Created to foster collaboration among engineers. At e2e.ti.com, you can ask questions, share knowledge, explore ideas and help solve problems with fellow engineers.

Design Support ***TI's Design Support*** Quickly find helpful E2E forums along with design support tools and contact information for technical support.

12.3 Trademarks

E2E is a trademark of Texas Instruments.
All other trademarks are the property of their respective owners.

12.4 Electrostatic Discharge Caution

These devices have limited built-in ESD protection. The leads should be shorted together or the device placed in conductive foam during storage or handling to prevent electrostatic damage to the MOS gates.

12.5 Glossary

SLYZ022 — *TI Glossary*.

This glossary lists and explains terms, acronyms, and definitions.

13 Mechanical, Packaging, and Orderable Information

The following pages include mechanical, packaging, and orderable information. This information is the most current data available for the designated devices. This data is subject to change without notice and revision of this document. For browser-based versions of this data sheet, refer to the left-hand navigation.

PACKAGING INFORMATION

Orderable part number	Status (1)	Material type (2)	Package | Pins	Package qty | Carrier	RoHS (3)	Lead finish/ Ball material (4)	MSL rating/ Peak reflow (5)	Op temp (°C)	Part marking (6)
THS4532IPW	Active	Production	TSSOP (PW) | 16	90 | TUBE	Yes	NIPDAU	Level-2-260C-1 YEAR	-40 to 125	THS4532
THS4532IPW.B	Active	Production	TSSOP (PW) | 16	90 | TUBE	Yes	NIPDAU	Level-2-260C-1 YEAR	-40 to 125	THS4532
THS4532IPWR	Active	Production	TSSOP (PW) | 16	2000 | LARGE T&R	Yes	NIPDAU	Level-2-260C-1 YEAR	-40 to 125	THS4532
THS4532IPWR.B	Active	Production	TSSOP (PW) | 16	2000 | LARGE T&R	Yes	NIPDAU	Level-2-260C-1 YEAR	-40 to 125	THS4532

(1) **Status:** For more details on status, see our product life cycle.

(2) **Material type:** When designated, preproduction parts are prototypes/experimental devices, and are not yet approved or released for full production. Testing and final process, including without limitation quality assurance, reliability performance testing, and/or process qualification, may not yet be complete, and this item is subject to further changes or possible discontinuation. If available for ordering, purchases will be subject to an additional waiver at checkout, and are intended for early internal evaluation purposes only. These items are sold without warranties of any kind.

(3) **RoHS values:** Yes, No, RoHS Exempt. See the TI RoHS Statement for additional information and value definition.

(4) **Lead finish/Ball material:** Parts may have multiple material finish options. Finish options are separated by a vertical ruled line. Lead finish/Ball material values may wrap to two lines if the finish value exceeds the maximum column width.

(5) **MSL rating/Peak reflow:** The moisture sensitivity level ratings and peak solder (reflow) temperatures. In the event that a part has multiple moisture sensitivity ratings, only the lowest level per JEDEC standards is shown. Refer to the shipping label for the actual reflow temperature that will be used to mount the part to the printed circuit board.

(6) **Part marking:** There may be an additional marking, which relates to the logo, the lot trace code information, or the environmental category of the part.

Multiple part markings will be inside parentheses. Only one part marking contained in parentheses and separated by a "~" will appear on a part. If a line is indented then it is a continuation of the previous line and the two combined represent the entire part marking for that device.

Important Information and Disclaimer: The information provided on this page represents TI's knowledge and belief as of the date that it is provided. TI bases its knowledge and belief on information provided by third parties, and makes no representation or warranty as to the accuracy of such information. Efforts are underway to better integrate information from third parties. TI has taken and continues to take reasonable steps to provide representative and accurate information but may not have conducted destructive testing or chemical analysis on incoming materials and chemicals. TI and TI suppliers consider certain information to be proprietary, and thus CAS numbers and other limited information may not be available for release.

In no event shall TI's liability arising out of such information exceed the total purchase price of the TI part(s) at issue in this document sold by TI to Customer on an annual basis.

TAPE AND REEL INFORMATION

REEL DIMENSIONS

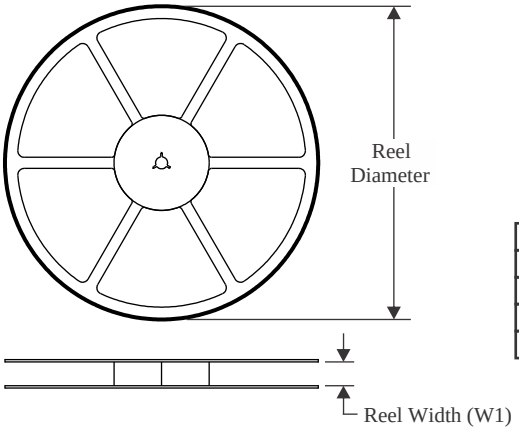

TAPE DIMENSIONS

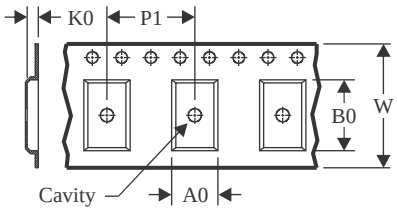

A0	Dimension designed to accommodate the component width
B0	Dimension designed to accommodate the component length
K0	Dimension designed to accommodate the component thickness
W	Overall width of the carrier tape
P1	Pitch between successive cavity centers

QUADRANT ASSIGNMENTS FOR PIN 1 ORIENTATION IN TAPE

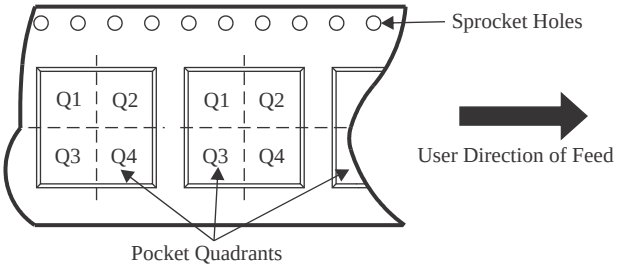

*All dimensions are nominal

Device	Package Type	Package Drawing	Pins	SPQ	Reel Diameter (mm)	Reel Width W1 (mm)	A0 (mm)	B0 (mm)	K0 (mm)	P1 (mm)	W (mm)	Pin1 Quadrant
THS4532IPWR	TSSOP	PW	16	2000	330.0	12.4	6.9	5.6	1.6	8.0	12.0	Q1

TAPE AND REEL BOX DIMENSIONS

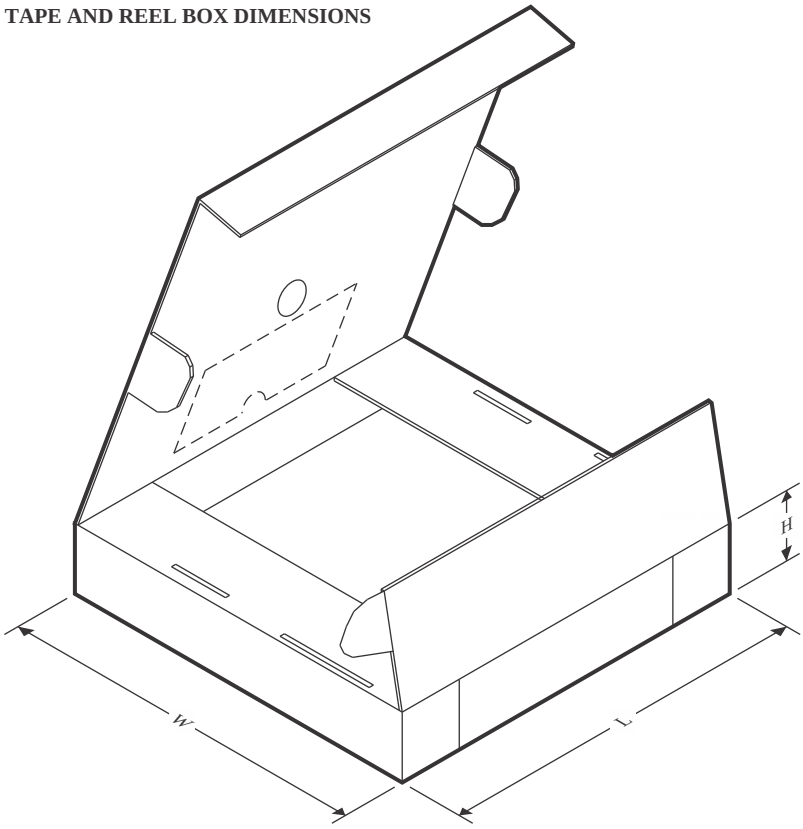

*All dimensions are nominal

Device	Package Type	Package Drawing	Pins	SPQ	Length (mm)	Width (mm)	Height (mm)
THS4532IPWR	TSSOP	PW	16	2000	356.0	356.0	35.0

TUBE

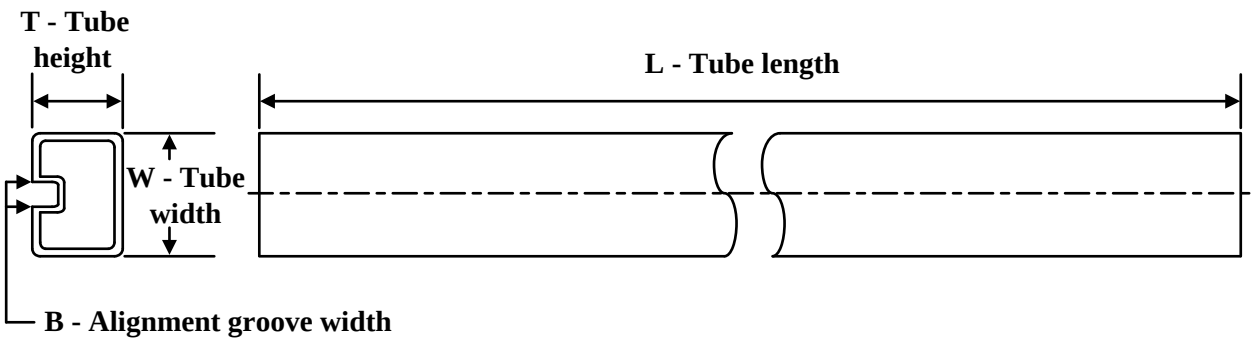

*All dimensions are nominal

Device	Package Name	Package Type	Pins	SPQ	L (mm)	W (mm)	T (µm)	B (mm)
THS4532IPW	PW	TSSOP	16	90	530	10.2	3600	3.5
THS4532IPW.B	PW	TSSOP	16	90	530	10.2	3600	3.5

PW0016A

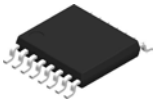

PACKAGE OUTLINE

TSSOP - 1.2 mm max height

SMALL OUTLINE PACKAGE

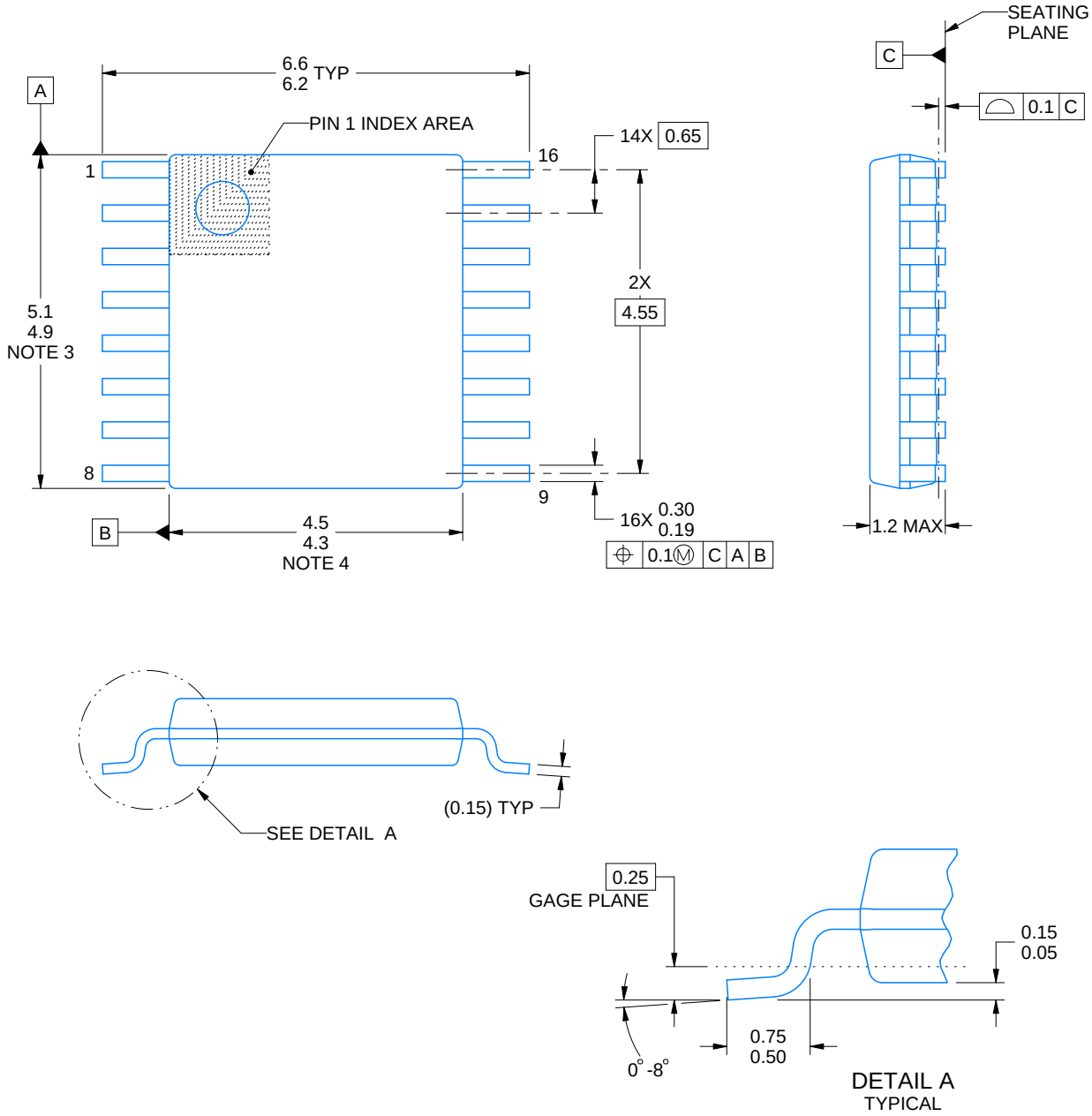

NOTES:

1. All linear dimensions are in millimeters. Any dimensions in parenthesis are for reference only. Dimensioning and tolerancing per ASME Y14.5M.
2. This drawing is subject to change without notice.
3. This dimension does not include mold flash, protrusions, or gate burrs. Mold flash, protrusions, or gate burrs shall not exceed 0.15 mm per side.
4. This dimension does not include interlead flash. Interlead flash shall not exceed 0.25 mm per side.
5. Reference JEDEC registration MO-153.

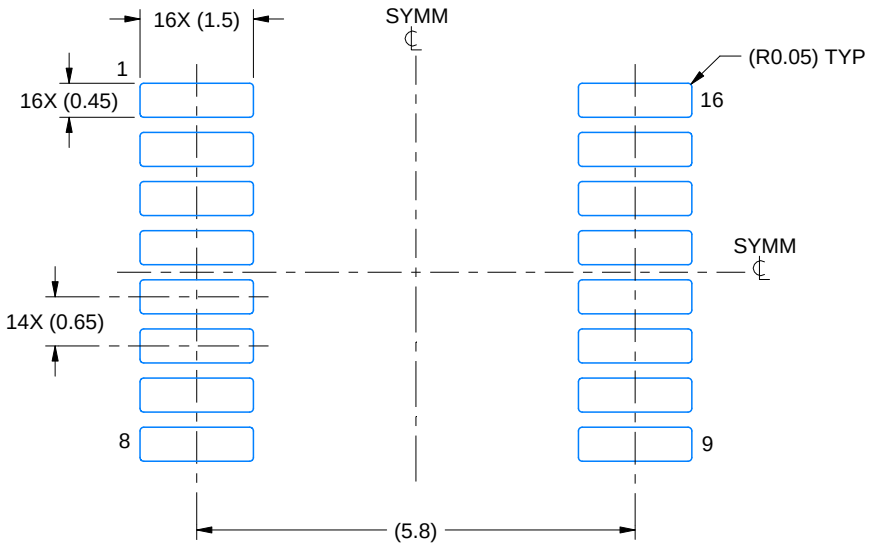

LAND PATTERN EXAMPLE
EXPOSED METAL SHOWN
SCALE: 10X

NON-SOLDER MASK DEFINED (PREFERRED)

SOLDER MASK DEFINED

SOLDER MASK DETAILS

4220204/A 02/2017

NOTES: (continued)

6. Publication IPC-7351 may have alternate designs.
7. Solder mask tolerances between and around signal pads can vary based on board fabrication site.

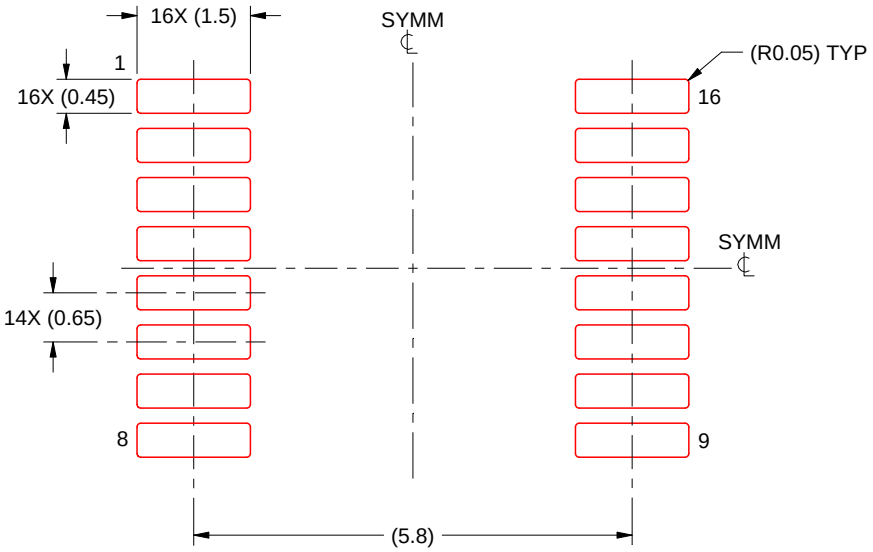

SOLDER PASTE EXAMPLE
BASED ON 0.125 mm THICK STENCIL
SCALE: 10X

4220204/A 02/2017

NOTES: (continued)

8. Laser cutting apertures with trapezoidal walls and rounded corners may offer better paste release. IPC-7525 may have alternate design recommendations.
9. Board assembly site may have different recommendations for stencil design.

IMPORTANT NOTICE AND DISCLAIMER

TI PROVIDES TECHNICAL AND RELIABILITY DATA (INCLUDING DATA SHEETS), DESIGN RESOURCES (INCLUDING REFERENCE DESIGNS), APPLICATION OR OTHER DESIGN ADVICE, WEB TOOLS, SAFETY INFORMATION, AND OTHER RESOURCES “AS IS” AND WITH ALL FAULTS, AND DISCLAIMS ALL WARRANTIES, EXPRESS AND IMPLIED, INCLUDING WITHOUT LIMITATION ANY IMPLIED WARRANTIES OF MERCHANTABILITY, FITNESS FOR A PARTICULAR PURPOSE OR NON-INFRINGEMENT OF THIRD PARTY INTELLECTUAL PROPERTY RIGHTS.

These resources are intended for skilled developers designing with TI products. You are solely responsible for (1) selecting the appropriate TI products for your application, (2) designing, validating and testing your application, and (3) ensuring your application meets applicable standards, and any other safety, security, regulatory or other requirements.

These resources are subject to change without notice. TI grants you permission to use these resources only for development of an application that uses the TI products described in the resource. Other reproduction and display of these resources is prohibited. No license is granted to any other TI intellectual property right or to any third party intellectual property right. TI disclaims responsibility for, and you will fully indemnify TI and its representatives against, any claims, damages, costs, losses, and liabilities arising out of your use of these resources.

TI’s products are provided subject to TI’s Terms of Sale or other applicable terms available either on ti.com or provided in conjunction with such TI products. TI’s provision of these resources does not expand or otherwise alter TI’s applicable warranties or warranty disclaimers for TI products.

TI objects to and rejects any additional or different terms you may have proposed.

Mailing Address: Texas Instruments, Post Office Box 655303, Dallas, Texas 75265
Copyright © 2025, Texas Instruments Incorporated