TPS92633-Q1 Three-Channel Automotive High-Side LED Driver with Thermal Sharing and Off-Board Binning

1 Features

- AEC-Q100 qualified for automotive applications:
  - Temperature grade 1: –40°C to 125°C, T_A
- Wide input voltage range: 4.5 V to 40 V
- Thermal sharing by external shunt resistor
- Low supply current in fault mode
- Three high-precision current regulation:
  - Up to 150-mA current output for each channel
  - ±5% accuracy over full temperature range
  - Independent current setting by resistor
  - Independent PWM pin for brightness control
  - Support off-board brightness binning resistor
  - Support external NTC for current derating
- Low dropout voltage:
  - Maximum dropout: 600 mV at 150 mA
- Diagnostics and protection
  - LED open-circuit with auto-recovery
  - LED short-to-GND with auto-recovery
  - Single LED short-circuit detection with auto-recovery
  - Diagnostic enable with adjustable threshold
  - Fault bus configurable as either one-fails–all-fail or only-failed-channel off (N-1)
  - Thermal shutdown
- Operation junction temperature range: –40°C to 150°C

2 Applications

- Automotive exterior rear light: rear lamp, center high mounted stop lamp, side marker
- Automotive exterior small light: door handle, blind spot detection indicator, charging inlet
- Automotive interior light: overhead console, reading lamp
- General-purpose LED driver applications

3 Description

The TPS92633-Q1 three-channel LED driver includes an unique thermal management design to reduce temperature rising on the device. The TPS92633-Q1 is a linear driver directly powered by automotive batteries with large voltage variations to output full current loads up to 150 mA per channel. External shunt resistors are leveraged to share output current and dissipate power out of the driver. The TPS92633-Q1 also drives LED units and off-board brightness binning resistors to simplify the manufacturing process and lower whole system cost. Its full-diagnostic capabilities include LED open, LED short-to-GND circuit and single LED short circuit detection.

The one-fails-all-fail feature of TPS92633-Q1 is able to work together with other LED drivers, such as the TPS9261x-Q1, TPS92630/8-Q1, and TPS92830-Q1 devices, to address different requirements.

Device Information

PART NUMBER	PACKAGE(1)	BODY SIZE (NOM)
TPS92633-Q1	HTSSOP (20)	6.50 mm × 4.40 mm

(1) For all available packages, see the orderable addendum at the end of the data sheet.

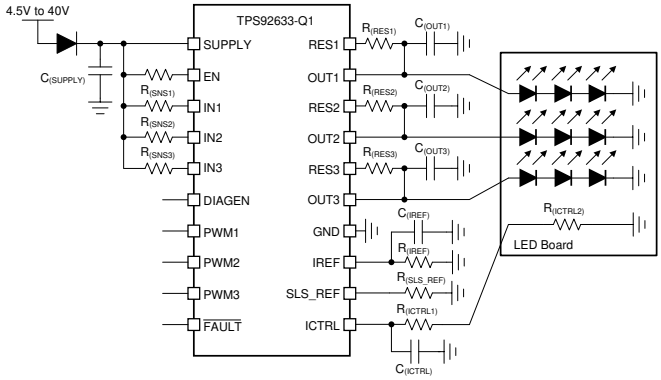

Typical Application Diagram

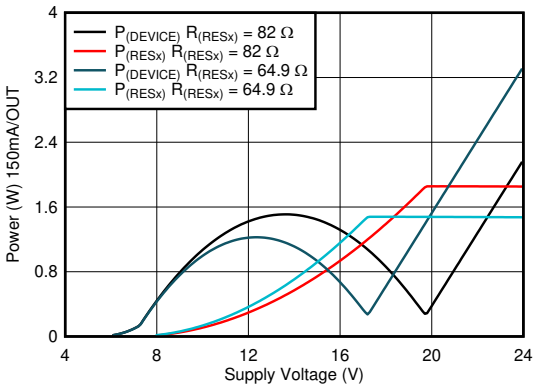

Power Dissipation On Device

An IMPORTANT NOTICE at the end of this data sheet addresses availability, warranty, changes, use in safety-critical applications, intellectual property matters and other important disclaimers. PRODUCTION DATA.

Table of Contents

1 Features.....1
2 Applications.....1
3 Description.....1
4 Revision History.....2
5 Pin Configuration and Functions.....3
6 Specifications.....4
6.1 Absolute Maximum Ratings.....4
6.2 ESD Ratings.....4
6.3 Recommended Operating Conditions.....4
6.4 Thermal Information.....4
6.5 Electrical Characteristics.....5
6.6 Timing Requirements.....6
6.7 Typical Characteristics.....8
7 Detailed Description.....12
7.1 Overview.....12
7.2 Functional Block Diagram.....12
7.3 Feature Description.....12
7.4 Device Functional Modes.....29
8 Application and Implementation.....30
8.1 Application Information.....30
8.2 Typical Applications.....30
9 Power Supply Recommendations.....37
10 Layout.....38
10.1 Layout Guidelines.....38
10.2 Layout Example.....38
11 Device and Documentation Support.....39
11.1 Receiving Notification of Documentation Updates.....39
11.2 Support Resources.....39
11.3 Trademarks.....39
11.4 Electrostatic Discharge Caution.....39
11.5 Glossary.....39
12 Mechanical, Packaging, and Orderable Information.....40

4 Revision History

NOTE: Page numbers for previous revisions may differ from page numbers in the current version.

Changes from Revision * (December 2020) to Revision A (May 2021)	Page
• Changed status from "Advance Information" to "Production Data"	1

Copyright © 2021 Texas Instruments Incorporated

5 Pin Configuration and Functions

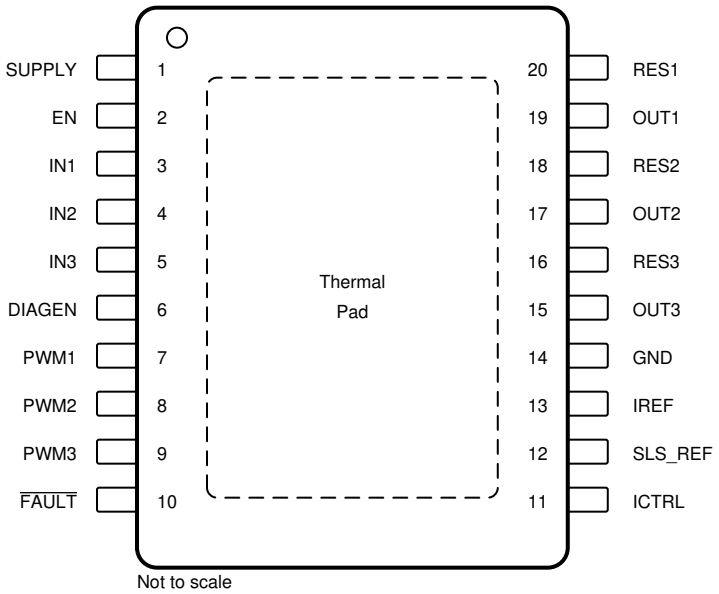

Figure 5-1. PWP Package 20-Pin HTSSOP With PowerPAD™ Package Top View

Table 5-1. Pin Functions

PIN		I/O	DESCRIPTION
NAME	NO.		
SUPPLY	1	I	Device power supply.
EN	2	I	Device enable pin.
IN1	3	I	Current input for channel 1.
IN2	4	I	Current input for channel 2.
IN3	5	I	Current input for channel 3.
DIAGEN	6	I	Enable pin for LED open-circuit detection and single LED short detection to avoid false open and single LED short diagnostics during low-dropout operation.
PWM1	7	I	PWM input for OUT1 and RES1 current output ON/OFF control.
PWM2	8	I	PWM input for OUT2 and RES2 current output ON/OFF control.
PWM3	9	I	PWM input for OUT3 and RES3 current output ON/OFF control.
$\overline{\text{FAULT}}$	10	I/O	Fault output, support one-fails–all-fail fault bus.
ICTRL	11	O	Resistor programmable voltage reference pin for LED binning resistor or NTC resistor.
SLS_REF	12	O	Resistor programmable voltage reference pin for single LED short threshold.
IREF	13	O	Current reference pin. A 12.3-kΩ resistor is recommended to be connected between IREF pin and ground.
GND	14	—	Ground.
OUT3	15	O	Current output for channel 3. A 10-nF capacitor is recommended between the pin to GND.
RES3	16	O	Current output for channel 3 with external thermal resistor.
OUT2	17	O	Current output for channel 2. A 10-nF capactitor is recommended between the pin to GND.
RES2	18	O	Current output for channel 2 with external thermal resistor.
OUT1	19	O	Current output for channel 1. A 10-nF capacitor is recommended between the pin to GND.
RES1	20	O	Current output for channel 1 with external thermal resistor.

Copyright © 2021 Texas Instruments Incorporated

6 Specifications

6.1 Absolute Maximum Ratings

over operating free-air temperature range (unless otherwise noted)[1]

		MIN	MAX	UNIT
Supply	SUPPLY	–0.3	45	V
High-voltage input	DIAGEN, IN1, IN2, IN3, EN, PWM1, PWM2, PMW3	–0.3	$V_{(SUPPLY)}$+0.3	V
High-voltage output	OUT1, OUT2, OUT3, RES1, RES2, RES3, ICTRL	–0.3	$V_{(SUPPLY)}$+0.3	V
Fault bus	$\overline{FAULT}$	–0.3	$V_{(SUPPLY)}$+0.3	V
Low-voltage pin	SLS_REF, IREF	–0.3	5.5	V
T_J	Operating junction temperature	–40	150	°C
T_{stg}	Storage temperature	–40	150	°C

(1) Stresses beyond those listed under *Absolute Maximum Ratings* may cause permanent damage to the device. These are stress ratings only, which do not imply functional operation of the device at these or any other conditions beyond those indicated under *Recommended Operating Conditions*. Exposure to absolute-maximum-rated conditions for extended periods may affect device reliability.

6.2 ESD Ratings

				VALUE	UNIT
$V_{(ESD)}$	Electrostatic discharge	Human-body model (HBM), per AEC Q100-002[1] HBM ESD Classification Level		±2000	V
		Charged-device model (CDM), per AEC Q100-011 CDM ESD Classification Level	All pins	±500	
			Corner pins (SUPPLY, RES1, $\overline{FAULT}$, ICTRL)	±750	

(1) AEC Q100-002 indicates that HBM stressing shall be in accordance with the ANSI/ESDA/JEDEC JS-001 specification.

6.3 Recommended Operating Conditions

over operating free-air temperature range (unless otherwise noted)

		MIN	NOM	MAX	UNIT
SUPPLY	Device supply voltage	4.5		40	V
IN1, IN2, IN3	Sense voltage	$V_{(SUPPLY)}$ - $V_{(CS_REG)}$			V
EN	Device EN pin	0		$V_{(SUPPLY)}$	V
PWM1, PWM2, PWM3	PWM inputs	0		$V_{(SUPPLY)}$	V
DIAGEN	Diagnostics enable pin	0		$V_{(SUPPLY)}$	V
OUT1, OUT2, OUT3, RES1, RES2, RES3	Driver output	0		$V_{(SUPPLY)}$	V
$\overline{FAULT}$	Fault bus	0		$V_{(SUPPLY)}$	V
ICTRL	Output current control	0		2.75	V
SLS_REF	Single LED short-circuit reference	0		3.5	V
IREF	Current reference	50		250	µA
Operating ambient temperature, T_A		–40		125	°C

6.4 Thermal Information

THERMAL METRIC[1]		TPS92633-Q1 PWP 20 PINS	UNIT
$R_{\theta JA}$	Junction-to-ambient thermal resistance	40.1	°C/W
$R_{\theta JC(top)}$	Junction-to-case (top) thermal resistance	34	°C/W
$R_{\theta JB}$	Junction-to-board thermal resistance	18.3	°C/W

Copyright © 2021 Texas Instruments Incorporated

6.4 Thermal Information (continued)

THERMAL METRIC[1]		TPS92633-Q1 PWP 20 PINS	UNIT
ψ_{JT}	Junction-to-top characterization parameter	1.1	°C/W
ψ_{JB}	Junction-to-board characterization parameter	18.2	°C/W
$R_{\theta JC(bot)}$	Junction-to-case (bottom) thermal resistance	5.6	°C/W

(1) For more information about traditional and new thermal metrics, see the Semiconductor and IC package thermal metrics application report.

6.5 Electrical Characteristics

$V_{(SUPPLY)}$ = 5 V to 40 V, $V_{(EN)}$ = 5V, T_J = –40°C to +150°C unless otherwise noted

PARAMETER		TEST CONDITIONS	MIN	TYP	MAX	UNIT
BIAS						
$V_{(POR_rising)}$	Supply voltage POR rising threshold			3.6	4	V
$V_{(POR_falling)}$	Supply voltage POR falling threshold		3.0	3.4		V
$I_{(SD)}$	Device shutdown current	$V_{(EN)}$ = 0 V		14	26	µA
$I_{(Quiescent)}$	Device standby ground current	PWM = HIGH		1.5	2.5	mA
$I_{(Fault)}$	Device supply current in fault mode	PWM = HIGH, $\overline{FAULT}$ externally pulled LOW	0.21	0.330	0.45	mA
LOGIC INPUTS (EN, DIAGEN, PWM)						
$V_{IL(EN)}$	Input logic-low voltage, EN				0.7	V
$V_{IH(EN)}$	Input logic-high voltage, EN		2.0			V
$I_{(EN_pulldown)}$	EN pulldown current	$V_{(EN)}$ = 12 V	1.5	3.3	4.5	µA
$V_{IL(DIAGEN)}$	Input logic-low voltage, DIAGEN		1.045	1.1	1.155	V
$V_{IH(DIAGEN)}$	Input logic-high voltage, DIAGEN		1.14	1.2	1.26	V
$V_{IL(PWM)}$	Input logic-low voltage, PWM		1.045	1.1	1.155	V
$V_{IH(PWM)}$	Input logic-high voltage, PWM		1.14	1.2	1.26	V
CONSTANT-CURRENT DRIVER						
$I_{(OUTx_Tot)}$	Device output-current for each channel	100% duty cycle	5		150	mA
$V_{(CS_REG)}$	Sense-resistor regulation voltage	T_A = –40°C to +125°C, ICTRL ground	46	50	54	mV
		T_A = –40°C to +125°C, $V_{(ICTRL)}$ = 0.68 V	95	100	105	
		T_A = –40°C to +125°C, $V_{(ICTRL)}$ = 1.365 V	192	200	208	
		T_A = –40°C to +125°C, $V_{(ICTRL)}$ = 2.75 V	384	400	416	
$\Delta V_{(CS_c2c)}$	Channel to channel mismatch	$\Delta V_{(CS_c2c)} = 1 - V_{(CS_REGx)}/V_{avg(CS_REG)}$, $V_{(ICTRL)}$ = 0.68 V	–3		+3	%
		$\Delta V_{(CS_c2c)} = 1 - V_{(CS_REGx)}/V_{avg(CS_REG)}$, $V_{(ICTRL)}$ = 1.365 V	–3		+3	
$\Delta V_{(CS_d2d)}$	Device to device mismatch	$\Delta V_{(CS_d2d)} = 1 - V_{avg(CS_REG)}/V_{nom(CS_REG)}$, $V_{(ICTRL)}$ = 0.68 V	–4		+4	%
		$\Delta V_{(CS_d2d)} = 1 - V_{avg(CS_REG)}/V_{nom(CS_REG)}$, $V_{(ICTRL)}$ = 1.365 V	–4		+4	
$R_{(CS_REG)}$	Sense-resistor range		0.65		20	Ω
$V_{(DROPOUT)}$	Voltage dropout from INx to OUTx, RESx open	current setting of 100 mA		200	400	mV
		current setting of 150 mA		300	600	
	Voltage dropout from INx to RESx, OUTx open	current setting of 100 mA		280	600	mV
		current setting of 150 mA		400	900	
$I_{(RESx)}$	Ratio of RESx current to total current	$I_{(RESx)}/I_{(OUTx_Tot)}$, $V_{(INx)} - V_{(RESx)}$ > 1 V	95			%
$V_{(IREF)}$	IREF voltage			1.235		V

6.5 Electrical Characteristics (continued)

$V_{(SUPPLY)}$ = 5 V to 40 V, $V_{(EN)}$ = 5V, T_J = –40°C to +150°C unless otherwise noted

PARAMETER		TEST CONDITIONS	MIN	TYP	MAX	UNIT
$N_{(ICTRL)}$	ICTRL current output ratio	$I_{(ICTRL)}/I_{(IREF)}$	9.7	10	10.3	
$V_{(ICTRL_SAT)}$	ICTRL saturated voltage	$V_{(CS_REG)}$ = 400 mV		2.75		V
$V_{(CS_SAT)}$	$V_{(SUPPLY)} – V_{(IN)}$	$V_{(ICTRL)}$ = 3 V		400		mV
DIAGNOSTICS						
$V_{(OPEN_th_rising)}$	LED open rising threshold, $V_{(IN)} – V_{(OUT)}$		180	300	420	mV
$V_{(OPEN_th_falling)}$	LED open falling threshold, $V_{(IN)} – V_{(OUT)}$			450		mV
$V_{(SG_th_rising)}$	Channel output short-to-ground rising threshold		1.14	1.2	1.26	V
$V_{(SG_th_falling)}$	Channel output short-to-ground falling threshold		0.855	0.9	0.945	V
$N_{(SLS_REF)}$	SLS_REF current output ratio	$I_{(SLS_REF)}/I_{(IREF)}$	0.97	1	1.03	
$N_{(OUT)}$	OUT voltage attenuation ratio	$V_{(OUT)}$ = 3 to 14 V.	3.84	4	4.16	
$I_{(Retry)}$	Channel output $V_{(OUT)}$ short-to-ground retry current		0.64	1.08	1.528	mA
$I_{(IREF_OPEN_th)}$	IREF open threshold			8		µA
$V_{(IREF_SHORT_th)}$	IREF short-to-ground threshold			0.6		V
$I_{(IREF_ST_Clamp)}$	Current clamp for IREF shor-to-GND			418		µA
FAULT						
$V_{IL(FAULT)}$	Logic input low threshold				0.7	V
$V_{IH(FAULT)}$	Logic input high threshold		2			V
$t_{(FAULT_rising)}$	Fault detection rising edge deglitch time			10		µs
$t_{(FAULT_falling)}$	Fault detection falling edge deglitch time			10		µs
$I_{(FAULT_pulldown)}$	$\overline{FAULT}$ internal pulldown current	$V_{(\overline{FAULT})}$ = 0.4 V	2	3	4	mA
$I_{(FAULT_pullup)}$	$\overline{FAULT}$ internal pullup current		6	10	14	µA
$I_{(FAULT_leakage)}$	$\overline{FAULT}$ leakage current	$V_{(\overline{FAULT})}$ = 40 V		1	2	µA
THERMAL PROTECTION						
$T_{(TSD)}$	Thermal shutdown junction temperature threshold		157	172	187	°C
$T_{(TSD_HYS)}$	Thermal shutdown junction temperature hysteresis			15		°C

6.6 Timing Requirements

		MIN	NOM	MAX	UNIT
$t_{(PWM_delay_rising)}$	PWM rising edge delay, $V_{IH(PWM)}$ voltage to 10% of output when $V_{(SUPPLY)}$ = 12 V, $V_{(OUT)}$ = 6 V, $V_{(CS_REG)}$ = 100 mV, $R_{(SNSx)}$ = 0.665 Ω and $R_{(RESx)}$ = 56 Ω, t_1 as shown in Figure 7-5		3		µs
	PWM rising edge delay, $V_{IH(PWM)}$ voltage to 10% of output when $V_{(SUPPLY)}$ = 12 V, $V_{(OUT)}$ = 6V, $V_{(CS_REG)}$ = 50 mV, $R_{(SNSx)}$ = 0.665 Ω and $R_{(RESx)}$ = 56 Ω, t_1 as shown in Figure 7-5		4		µs
$t_{(Current_rising)}$	Output current rising from 10% to 90% when $V_{(SUPPLY)}$ = 12 V, $V_{(OUT)}$ = 6 V, $V_{(CS_REG)}$ = 100 mV, $R_{(SNSx)}$ = 0.665 Ω and $R_{(RESx)}$ = 56 Ω, t_2 as shown in Figure 7-5		2		µs
	Output current rising from 10% to 90% when $V_{(SUPPLY)}$ = 12 V, $V_{(OUT)}$ = 6 V, $V_{(CS_REG)}$ = 50 mV, $R_{(SNSx)}$ = 0.665 Ω and $R_{(RESx)}$ = 56 Ω, t_2 as shown in Figure 7-5		2.5		µs
$t_{(PWM_delay_falling)}$	PWM falling edge delay, $V_{IL(PWM)}$ voltage to 90% of output current when $V_{(SUPPLY)}$ = 12 V, $V_{(OUT)}$ = 6 V, $V_{(CS_REG)}$ = 100 mV, $R_{(SNSx)}$ = 0.665 Ω and $R_{(RESx)}$ = 56 Ω, t_3 as shown in Figure 7-5		2.4		µs
	PWM falling edge delay, $V_{IL(PWM)}$ voltage to 90% of output current when $V_{(SUPPLY)}$ = 12 V, $V_{(OUT)}$ = 6 V, $V_{(CS_REG)}$ = 50 mV, $R_{(SNSx)}$ = 0.665 Ω and $R_{(RESx)}$ = 56 Ω, t_3 as shown in Figure 7-5		2.6		µs

Copyright © 2021 Texas Instruments Incorporated

6.6 Timing Requirements (continued)

		MIN	NOM	MAX	UNIT
$t_{(Current_falling)}$	Output current falling from 90% to 10% when $V_{(SUPPLY)}$ = 12 V, $V_{(OUT)}$ = 6 V, $V_{(CS_REG)}$ = 100 mV, $R_{(SNSx)}$ = 0.665 Ω and $R_{(RESx)}$ = 56 Ω, t_4 as shown in Figure 7-5		5		µs
	Output current falling from 90% to 10% when $V_{(SUPPLY)}$ = 12 V, $V_{(OUT)}$ = 6 V, $V_{(CS_REG)}$ = 50 mV, $R_{(SNSx)}$ = 0.665Ω and $R_{(RESx)}$ = 56 Ω, t_4 as shown in Figure 7-5		1		µs
$t_{(STARTUP)}$	SUPPLY rising edge to 10% output current when $C_{(IREF)}$ = $C_{(ICTRL)}$= 10 pF, $V_{(OUT)}$ = 6 V, $V_{(CS_REG)}$ = 100 mV, $R_{(SNSx)}$ = 0.665 Ω and $R_{(RESx)}$ = 56 Ω, t_5 as shown in Figure 7-5		85		µs
$t_{(IREF_deg)}$	IREF pin open and short to GND detection deglitch time		125		µs
$t_{(OPEN_deg)}$	LED-open fault-deglitch time, t_7 as shown in Figure 7-8		125		µs
$t_{(SG_deg)}$	Output short-to-ground detection deglitch time, t_8 as shown in Figure 7-7		125		µs
$t_{(Recover_deg)}$	Open and Short fault recovery deglitch time, t_{10} as shown in Figure 7-8 and Figure 7-7		125		µs
$t_{(SLS_deg)}$	Single LED short-circuit detection deglitch time, t_9 as shown in Figure 7-10		135		µs
$t_{(SLS_retry_interval)}$	Single LED short-circuit failure retry interval time, t_{11} as shown in Figure 7-10		10000		µs
$t_{(SLS_retry_period)}$	Single LED short-circuit failure retry period time, t_{12} as shown in Figure 7-10		300		µs
$t_{(SLS_retry_deg)}$	Single LED short-circuit failure retry deglitch time, t_{13} as shown in Figure 7-10		50		µs
$t_{(FAULT_recovery)}$	Fault recovery delay time, t_{14} as shown in Figure 7-8, Figure 7-7 and Figure 7-10		50		µs
$t_{(TSD_deg)}$	Thermal over temperature deglitch time		50		µs

6.7 Typical Characteristics

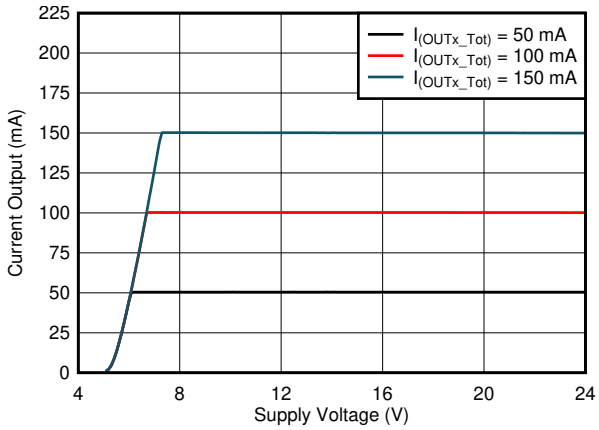

Figure 6-1. Output Current vs Supply Voltage

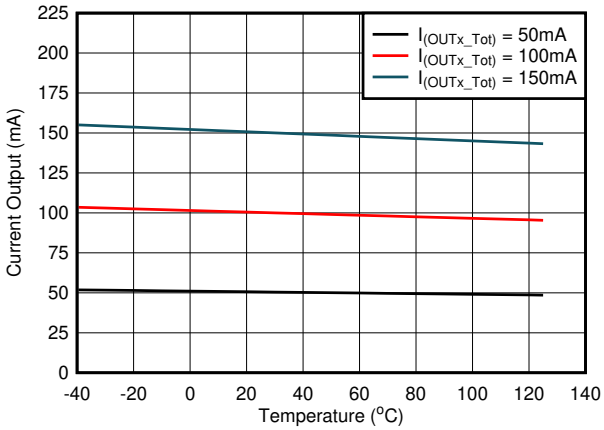

Figure 6-2. Output Current vs Temperature

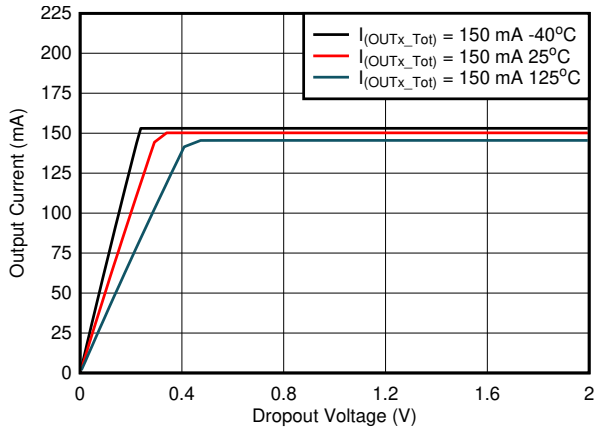

Figure 6-3. Output Current vs Dropout Voltage

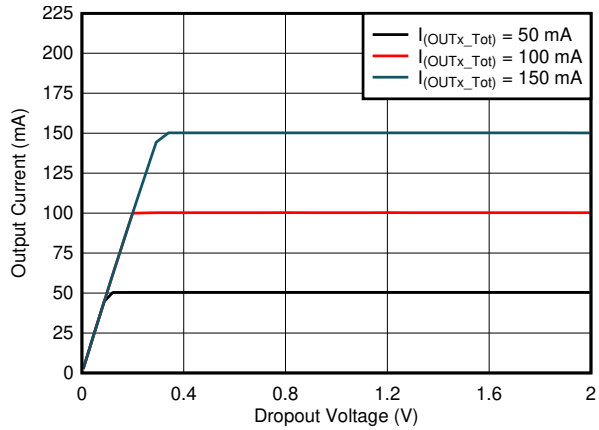

Figure 6-4. Output Current vs Dropout Voltage

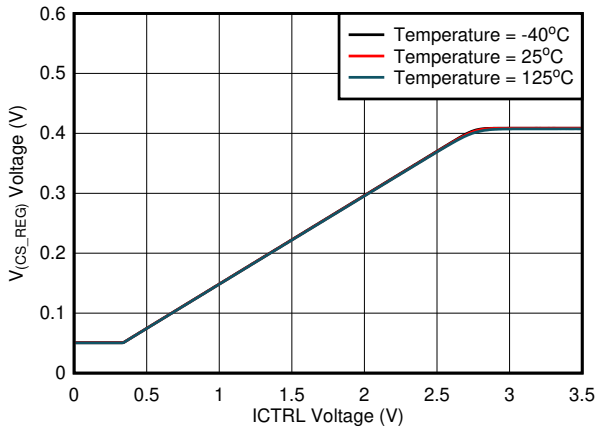

Figure 6-5. $V_{(CS_REG)}$ vs ICTRL Voltage

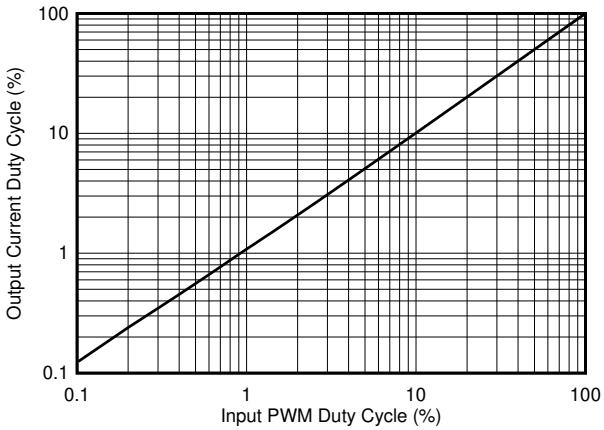

Figure 6-6. PWM Output Duty Cycle vs PWM Input Duty Cycle

Copyright © 2021 Texas Instruments Incorporated

6.7 Typical Characteristics (continued)

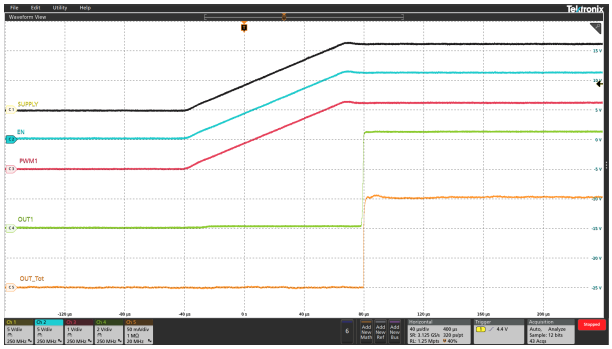

Ch1 = $V_{(SUPPLY)}$ Ch2 = $V_{(EN)}$ Ch3 = $V_{(PWM1)}$
Ch4 = $V_{(OUT1)}$ Ch5 = $I_{(OUT_Tot)}$

Figure 6-7. Power Up Sequency

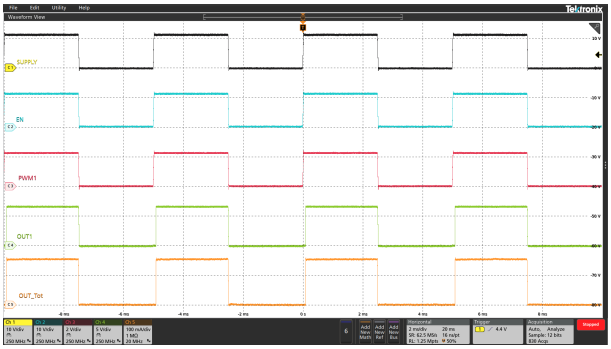

Ch1 = $V_{(SUPPLY)}$ Ch2 = $V_{(EN)}$ Ch3 = $V_{(PWM1)}$
Ch4 = $V_{(OUT1)}$ Ch5 = $I_{(OUT_Tot)}$

Figure 6-8. Supply Dimming at 200 Hz

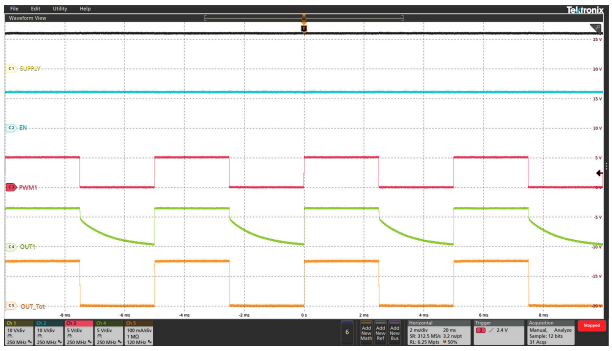

Ch1 = $V_{(SUPPLY)}$ Ch2 = $V_{(EN)}$ Ch3 = $V_{(PWM1)}$
Ch4 = $V_{(OUT1)}$ Ch5 = $I_{(OUT_Tot)}$

Figure 6-9. PWM Dimming at 200 Hz

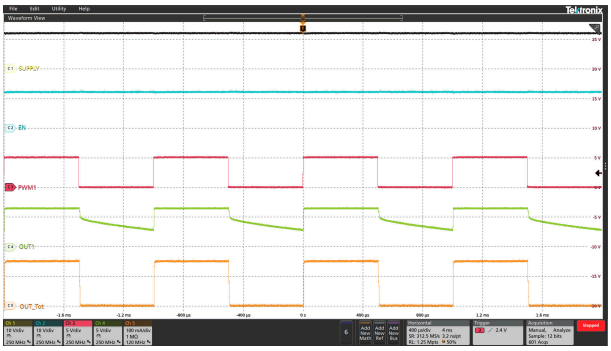

Ch1 = $V_{(SUPPLY)}$ Ch2 = $V_{(EN)}$ Ch3 = $V_{(PWM1)}$
Ch4 = $V_{(OUT1)}$ Ch5 = $I_{(OUT_Tot)}$

Figure 6-10. PWM Dimming at 1 kHz

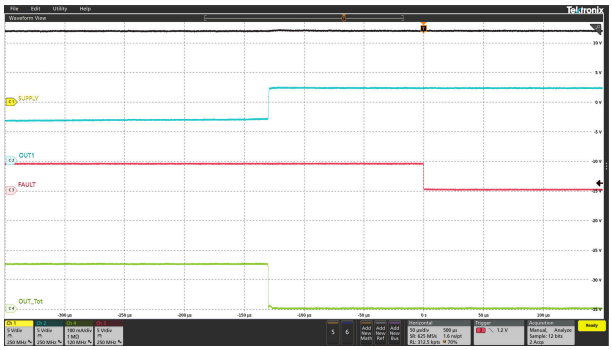

Ch1 = $V_{(SUPPLY)}$ Ch2 = $V_{(OUT1)}$ Ch3 = $V_{(\overline{FAULT})}$
Ch4 = $I_{(OUT_Tot)}$

Figure 6-11. LED Open Protection

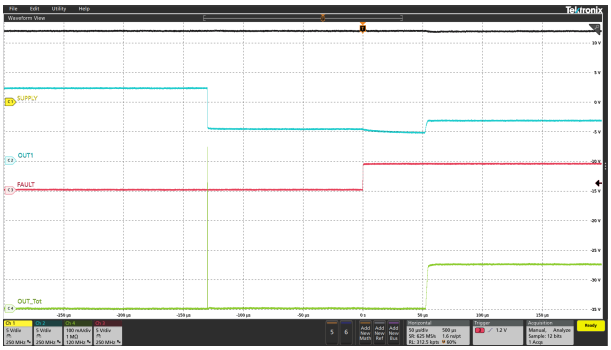

Ch1 = $V_{(SUPPLY)}$ Ch2 = $V_{(OUT1)}$ Ch3 = $V_{(\overline{FAULT})}$
Ch4 = $I_{(OUT_Tot)}$

Figure 6-12. LED Open Protection Recovery

6.7 Typical Characteristics (continued)

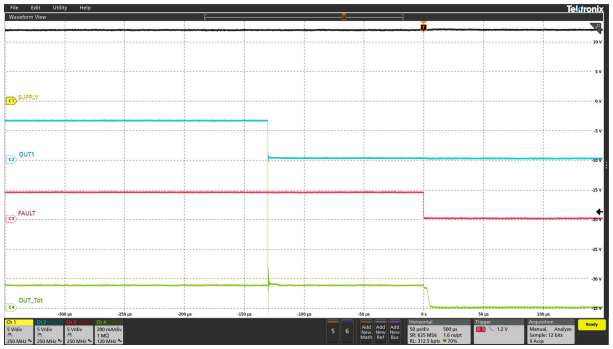

Ch1 = $V_{(SUPPLY)}$ Ch2 = $V_{(OUT1)}$ Ch3 = $V_{(\overline{FAULT})}$
Ch4 = $I_{(OUT_Tot)}$

Figure 6-13. LED Short-Circuit Protection

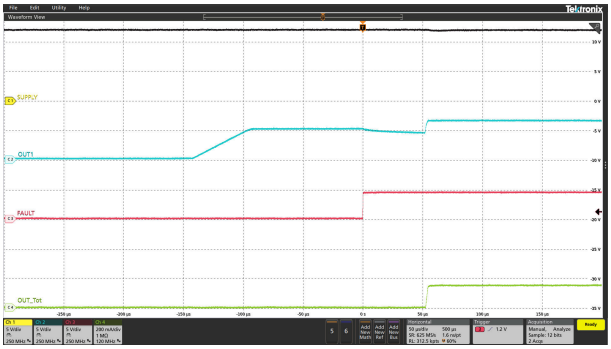

Ch1 = $V_{(SUPPLY)}$ Ch2 = $V_{(OUT1)}$ Ch3 = $V_{(\overline{FAULT})}$
Ch4 = $I_{(OUT_Tot)}$

Figure 6-14. LED Short-Circuit Protection Recovery

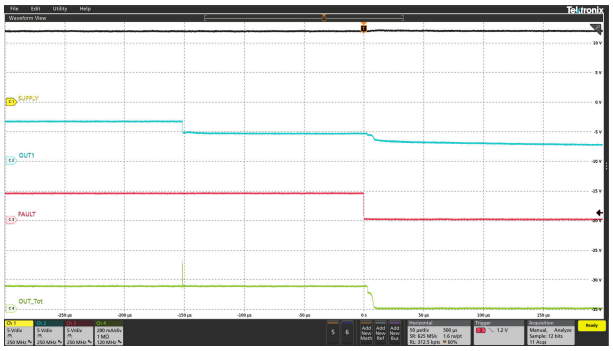

Ch1 = $V_{(SUPPLY)}$ Ch2 = $V_{(OUT1)}$ Ch3 = $V_{(\overline{FAULT})}$
Ch4 = $I_{(OUT_Tot)}$

Figure 6-15. Single LED Short-Circuit Protection

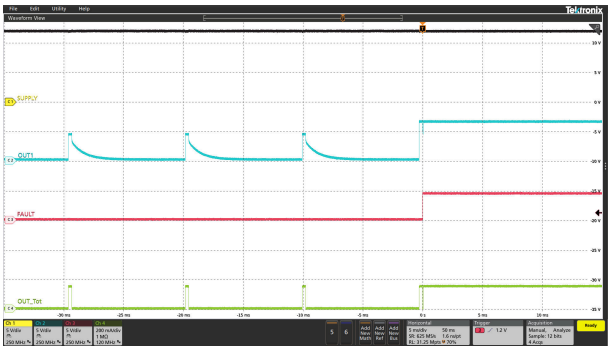

Ch1 = $V_{(SUPPLY)}$ Ch2 = $V_{(OUT1)}$ Ch3 = $V_{(\overline{FAULT})}$
Ch4 = $I_{(OUT_Tot)}$

Figure 6-16. Single LED Short-Circuit Protection Recovery

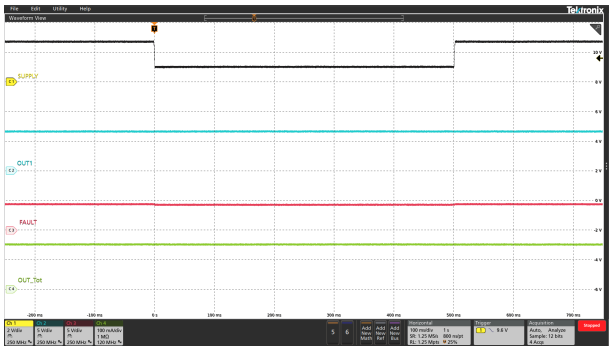

Ch1 = $V_{(SUPPLY)}$ Ch2 = $V_{(OUT1)}$ Ch3 = $V_{(\overline{FAULT})}$
Ch4 = $I_{(OUT_Tot)}$ DIAGEN = High

Figure 6-17. Transient Undervoltage

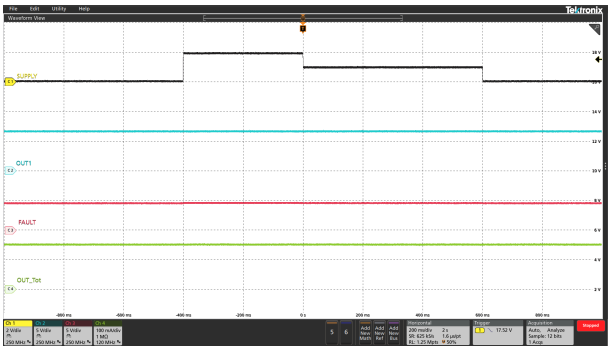

Ch1 = $V_{(SUPPLY)}$ Ch2 = $V_{(OUT1)}$ Ch3 = $V_{(\overline{FAULT})}$
Ch4 = $I_{(OUT_Tot)}$ DIAGEN = High

Figure 6-18. Transient Overvoltage

Copyright © 2021 Texas Instruments Incorporated

6.7 Typical Characteristics (continued)

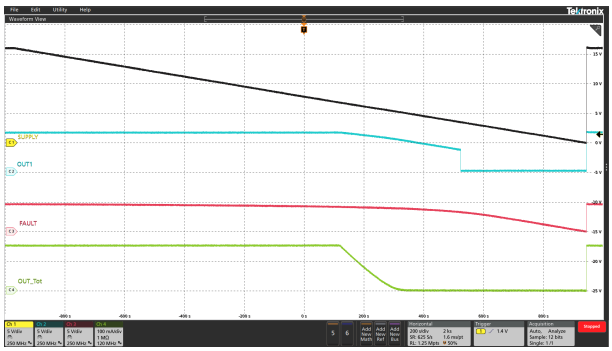

Ch1 = $V_{(SUPPLY)}$ Ch2 = $V_{(OUT1)}$ Ch3 = $V_{(\overline{FAULT})}$
Ch4 = $I_{(OUT_Tot)}$ DIAGEN = High

Figure 6-19. Slow Decrease and Quick Increase of Supply Voltage

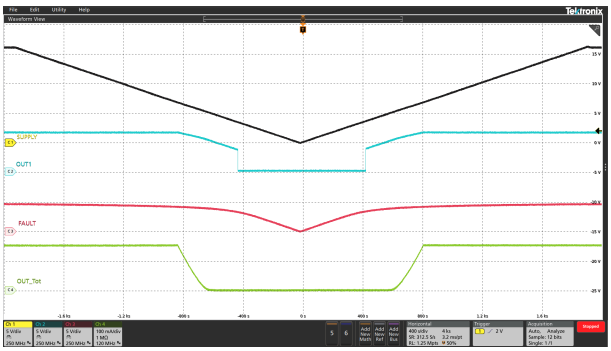

Ch1 = $V_{(SUPPLY)}$ Ch2 = $V_{(OUT1)}$ Ch3 = $V_{(\overline{FAULT})}$
Ch4 = $I_{(OUT_Tot)}$ DIAGEN = High

Figure 6-20. Slow Decrease and Slow Increase of Supply Voltage

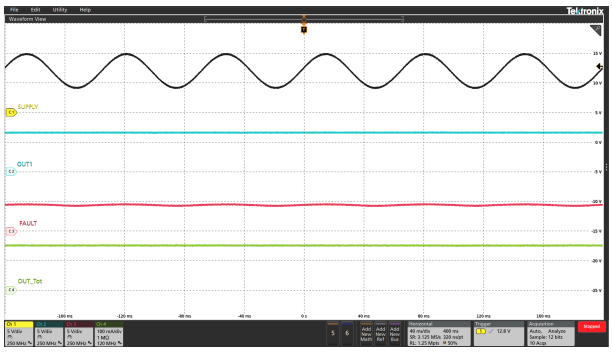

Ch1 = $V_{(SUPPLY)}$ Ch2 = $V_{(OUT1)}$ Ch3 = $V_{(\overline{FAULT})}$
Ch4 = $I_{(OUT_Tot)}$ DIAGEN = High

Figure 6-21. Superimposed Alternating Voltage 15 Hz

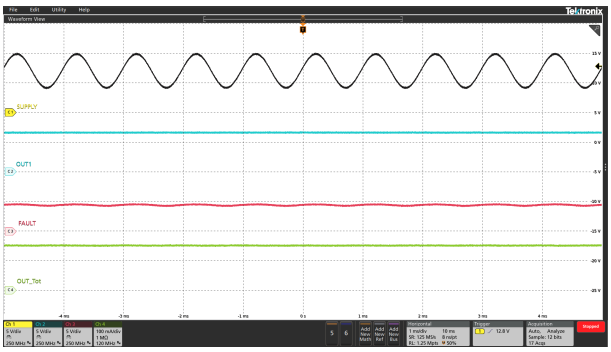

Ch1 = $V_{(SUPPLY)}$ Ch2 = $V_{(OUT1)}$ Ch3 = $V_{(\overline{FAULT})}$
Ch4 = $I_{(OUT_Tot)}$ DIAGEN = High

Figure 6-22. Superimposed Alternating Voltage 1 kHz

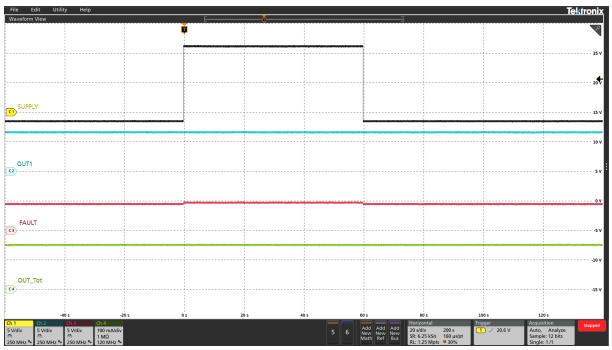

Ch1 = $V_{(SUPPLY)}$ Ch2 = $V_{(OUT1)}$ Ch3 = $V_{(\overline{FAULT})}$
Ch4 = $I_{(OUT_Tot)}$ DIAGEN = High

Figure 6-23. Jump Start

7 Detailed Description

7.1 Overview

The TPS92633-Q1 three-channel LED driver includes an unique thermal management design to reduce temperature rising on the device. The TPS92633-Q1 is a linear driver directly powered by automotive batteries with large voltage variations to output full current loads up to 150 mA per channel. The current output at each channel can be independently set by external $R_{(SNS)}$ resistors. Current flows from the supply through the $R_{(SNSx)}$ resistor into the integrated current regulation circuit and to the LEDs through OUTx pin and RESx pin. All three-channel current is configurable by an external resistor connected to the ICTRL pin. Either a NTC resistor for LED temperature monitor or a LED brightness binning resistor can be connected to ICTRL pin in same board or off-board. The TPS92633-Q1 device supports both supply control and EN/PWM control to turn LED ON/OFF. The LED brightness is also adjustable by voltage dutycycle applied on either SUPPLY or EN/PWM with frequency above 100 Hz. The TPS92633 provides full diagnostics to keep the system operating reliably including LED open/short circuit detection, single LED short circuit detection, supply POR and thermal shutdown protection. The TPS92633-Q1 device is in a HTSSOP package with total 20 leads. The TPS92633-Q1 can be used with other TPS9261x-Q1, TPS92630-Q1 and TPS92830-Q1 family devices together to achieve one-fails-all-fail protection by tying all $\overline{FAULT}$ pins together as a fault bus.

7.2 Functional Block Diagram

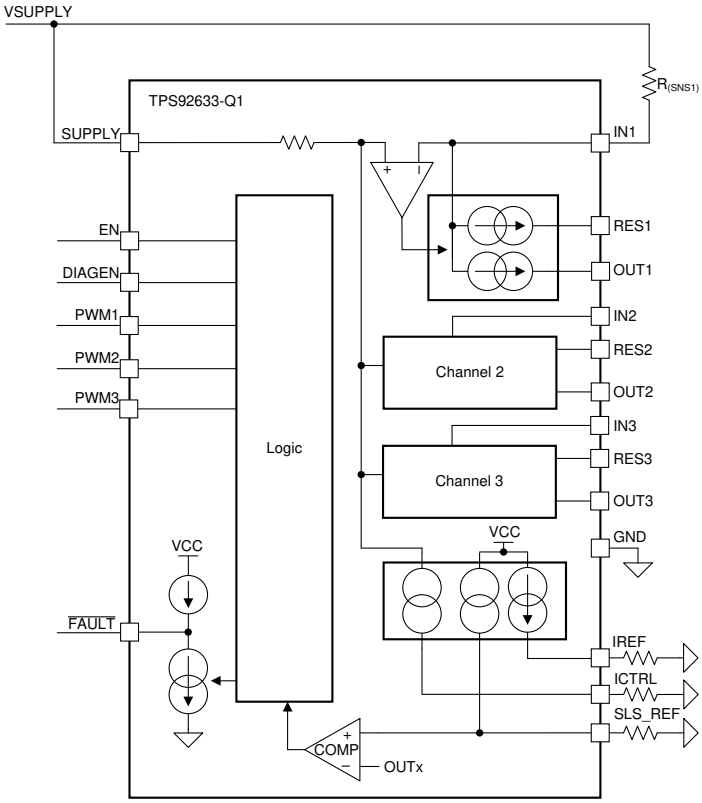

7.3 Feature Description

7.3.1 Power Supply (SUPPLY)

7.3.1.1 Power-On Reset

The TPS92633-Q1 device has an internal power-on-reset (POR) function. When power is applied to the SUPPLY pin, the internal POR circuit holds the device in reset state until $V_{(SUPPLY)}$ is above $V_{(POR_rising)}$.

7.3.1.2 Supply Current in Fault Mode

The TPS92633-Q1 device consumes minimal quiescent current, $I_{(Fault)}$, into SUPPLY when the $\overline{FAULT}$ pin is externally pulled LOW. At the same time, the device shuts down all three output drivers, IREF and ICTRL.

Copyright © 2021 Texas Instruments Incorporated

If device detects a fault, it pulls down the $\overline{FAULT}$ pin by an internal constant current, $I_{(FAULT_pulldown)}$ as a fault indication to the fault bus.

7.3.2 Enable and Shutdown (EN)

The TPS92633-Q1 device has an enable input. When EN is low, the device is in sleep mode with ultra low quiescent current $I_{(SD)}$. This low current helps to save system-level current consumption in applications where battery voltage directly connects to the device without high-side switches.

7.3.3 Reference Current (IREF)

The TPS92633-Q1 device has IREF pin to generate a high accuracy and low temperature shift current reference. The calculated result for $I_{(IREF)}$ is 100 µA when $R_{(IREF)}$ is 12.3 kΩ. The $I_{(IREF)}$ can be programmed by external resistor, $R_{(IREF)}$ in the range from 25 µA to 250 µA. The voltage on the IREF pin is regulated to the 1.235 V typically, and the current output on IREF pin can be calculated by using Equation 1.

$$I_{(IREF)} = \frac{V_{(IREF)}}{R_{(IREF)}} \tag{1}$$

where

- $V_{(IREF)}$ = 1.235 V (typical)
- $R_{(IREF)}$ = 12.3 kΩ recommended

The $R_{(IREF)}$ resistor needs to be placed as close as possible to the IREF pin with a 1-nF ceramic capacitor in parallel to achieve the noise immunity. The off-board $R_{(IREF)}$ setup is not allowed due to the concern of reference current instability.

7.3.4 Constant-Current Output and Setting (INx)

The TPS92633-Q1 device is a high-side current driver for driving LEDs. The device controls each output current through regulating the voltage drop on an external high-side current-sense resistor, $R_{(SNSx)}$ between SUPPLY and INx independently for each channel. An integrated error amplifier drives an internal power transistor to maintain the voltage drop on the current-sense resistor $R_{(SNSx)}$ to $V_{(CS_REG)}$, therefore regulates the current output to target value. When the output current is in regulation, the current value for each channel can be calculated by using Equation 2.

$$I_{(OUTx_Tot)} = \frac{V_{(CS_REG)}}{R_{(SNSx)}} \tag{2}$$

where

- $V_{(CS_REG)}$ is variable according to Equation 3
- x = 1, 2 or 3 for output channel 1, 2 or 3

When the supply voltage drops below total LED string forward voltage plus required headroom voltage, the sum of $V_{(DROPOUT)}$ and $V_{(CS_REG)}$, the TPS92633-Q1 is not able to deliver enough current output as set by the value of $R_{(SNSx)}$, and the voltage across the current-sense resistor $R_{(SNSx)}$ is less than $V_{(CS_REG)}$.

7.3.5 Analog Current Control (ICTRL)

The TPS92633-Q1 supports analog constant current control for all three output channels together through adjusting the $V_{(CS_REG)}$ voltage. As described in Constant-Current Output and Setting (INx), the TPS92633-Q1 regulates each channel output current by maintaining the voltage drop on each $R_{(SNSx)}$ same to $V_{(CS_REG)}$. The $V_{(CS_REG)}$ voltage is adjustable by an external resistor on ICTRL pin. The TPS92633-Q1 outputs a constant current, $I_{(ICTRL)}$, on the ICTRL pin and measures the voltage on the ICTRL pin, $V_{(ICTRL)}$, to determine the $V_{(CS_REG)}$. The $I_{(ICTRL)}$ current is 10 times of the $I_{(IREF)}$, and the $V_{(ICTRL)}$ is multiplied result of $I_{(ICTRL)}$ and $R_{(ICTRL)}$. The TPS92633-Q1 internally clamps the $V_{(ICTRL)}$ to maximum 2.75 V. The $V_{(CS_REG)}$ voltage can be calculated by using Equation 3.

$$V_{(CS_REG)} = \frac{I_{(IREF)} \times R_{(ICTRL)} \times 25}{17} \tag{3}$$

where

- $I_{(IREF)}$ is in A unit
- $R_{(ICTRL)}$ is in Ω unit
- $V_{(CS_REG)}$ is in V unit

The minimum voltage of $V_{(CS_REF)}$ is 50 mV typically to maintain the high accurate current output.

The final total output current for each channel can be calculated by using Equation 4 which is combination of Equation 1, Equation 2 and Equation 3.

$$I_{(OUTx_Tot)} = \frac{V_{(IREF)} \times R_{(ICTRL)} \times 25}{R_{(IREF)} \times R_{(SNSx)} \times 17} \tag{4}$$

where

- $V_{(IREF)}$ = 1.235 V
- $R_{(IREF)}$ is in kΩ unit
- $R_{(ICTRL)}$ is in Ω unit
- $R_{(SNSx)}$ is in Ω unit
- $I_{(OUTx_Tot)}$ is in mA unit

The calculated result for $I_{(OUTx_Tot)}$ is 147.7 mA when $R_{(IREF)}$ is 12.3 kΩ, $R_{(ICTRL)}$ is 1000 Ω and $R_{(SNSx)}$ is 1Ω.

7.3.5.1 Off-Board Brightness Binning Resistor

With analog current control feature, a LED brightness binning resistor can be connected to ICTRL pin to set the output current according to LED brightness bin. The binning resistor can be placed in off-board with LED units. In order to achieve the best performance for the noise rejection, two resistors in serial can be adopted. One resistor is placed as closed as possible to the ICTRL pin in the same PCB board with device, and another one real binning resistor is placed in the other PCB board with LED units together.

As Figure 7-1 illustrated, the $R_{(ICTRL1)}$ resistor and $C_{(ICTRL)}$ ceramic capacitor need to be placed as close as possible to the ICTRL pin for noise decoupling. The off-board $R_{(ICTRL2)}$ resistor can be placed in LED board as real binning resistor. TI recommends a 10-nF ceramic capacitor for $C_{(ICTRL)}$.

Copyright © 2021 Texas Instruments Incorporated

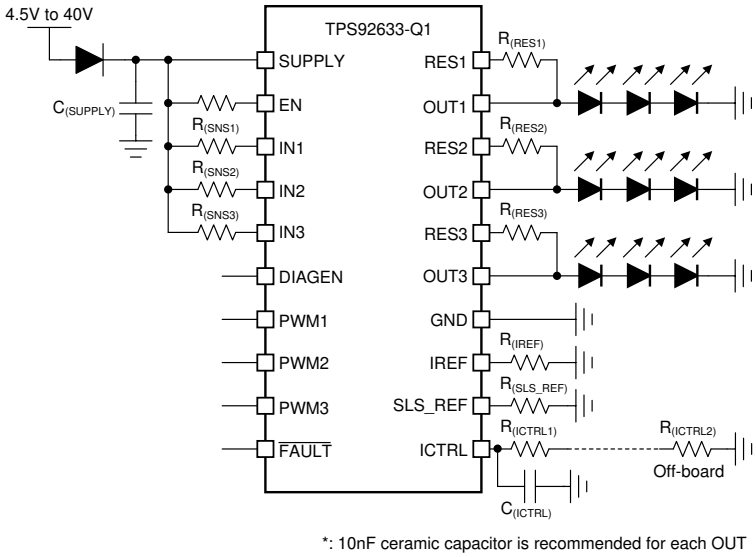

Figure 7-1. Application Schematic For Off-Board Brightness Binning Resistor

The $V_{(CS_REG)}$ is 50 mV typically when the ICTRL pin is short to GND.

7.3.5.2 NTC Resistor

The analog current control feature also allows to connect a NTC thermistor on ICTRL pin to achieve the LED current derating based on measured PCB board temperature or LED unit temperature. The resistance of NTC thermistor depends on the environment temperature. The resistance of NTC thermistor is decreasing with the temperature rising. It leads to the decreasing of the equivalent resistance of $R_{(ICTRL)}$ on ICTRL pin and the output current reduction from the calculation based on Equation 2 and Equation 3.

TI recommends to connect a resistor network including NTC thermistor (e.g. NCU18XH103F6SRB) to ICTRL pin as illustrated in below Figure 7-2. The resistor value of R1 and R2 work with NTC thermistor to adjust the equivalent resistance curve depending on the temperature to achieve the system required current derating.

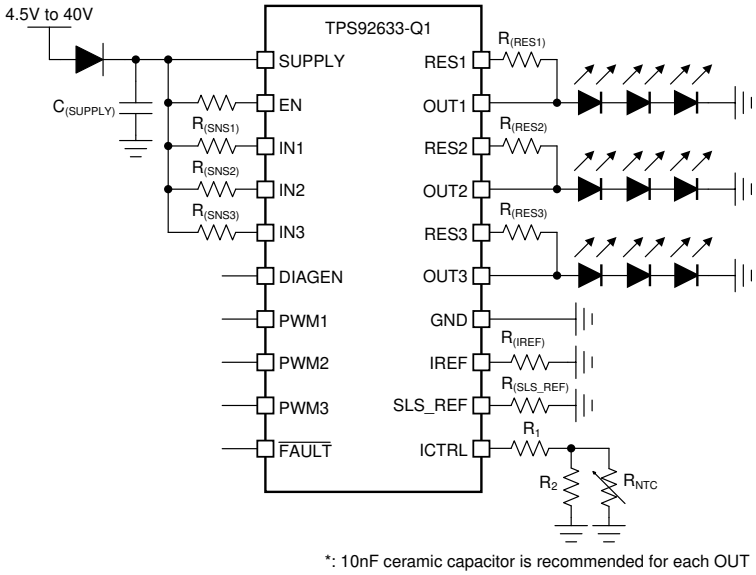

Figure 7-2. Application Schematic For External NTC Thermistor

7.3.6 Thermal Sharing Resistor (OUTx and RESx)

The TPS92633-Q1 device provides two current output paths for each channel. Current flows from the supply through the $R_{(SNSx)}$ resistor into the integrated current regulation circuit and to the LEDs through OUTx pin and RESx pin. The current output on both OUTx pin and RESx pin is independently regulated to achieve total required current output. The summed current of OUTx and RESx is equal to the current through the $R_{(SNSx)}$ resistor in the channel. The OUTx connects to anode of LEDs load in serial directly, however RESx connects to the LEDs through an external resistor to share part of the power dissipation and reduce the thermal accumulation in TPS92633-Q1.

The integrated independent current regulation in TPS92633-Q1 dynamically adjusts the output current on both OUTx and RESx output to maintain the stable summed current for LED. The TPS92633-Q1 always regulates the current output to the RESx pin as much as possible until the RESx current path is saturated, and the rest of required current is regulated from the OUTx. As a result, the most of the current to LED outputs through the RESx pin when the voltage dropout is relatively high between SUPPLY and LED required total forward voltage. In the opposite case, the most of the current to LED outputs through the OUTx pin when the voltage headroom is relatively low between SUPPLY and LED required forward voltage. Figure 7-3 and Figure 7-4 shows the curve of current and power dissipation distributor depending on supply voltage when $R_{(RESx)}$ is 68.5 Ω.

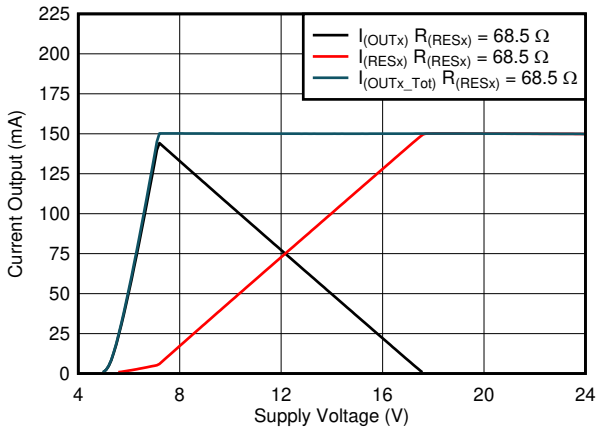

Figure 7-3. Output Current Distribution vs Supply Voltage

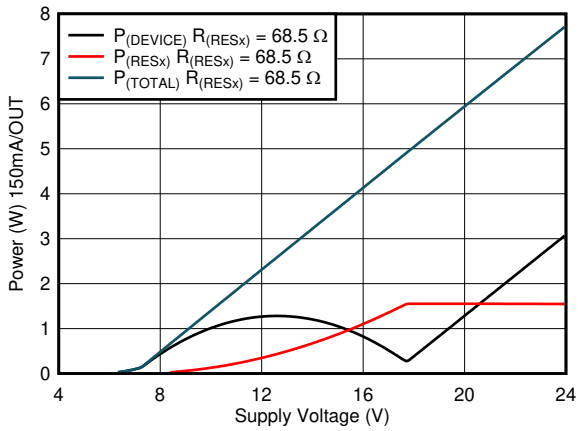

Figure 7-4. Power Dissipation vs Supply Voltage

7.3.7 PWM Control (PWMx)

The pulse width modulation (PWM) input of the TPS92633-Q1 functions as enable for the output current. When the voltage applied on the PWM pin is higher than $V_{IH(PWM)}$, the relevant output current is enabled. When the voltage applied on PWM pin is lower than $V_{IL(PWM)}$, the output current is disabled as well as the diagnostic features. Besides output current enable and disable function, the PWM input of TPS92633-Q1 also supports adjustment of the average current output for brightness control when the frequency of applied PWM signal is higher than 100 Hz, which is out of visible frequency range of human eyes. TI recommends a 200-Hz PWM signal with 1% to 100% duty cycle input for brightness control. Please refer to Figure 7-5 for typical timming information and Figure 8-4 for typical PWM dimming application.

Copyright © 2021 Texas Instruments Incorporated

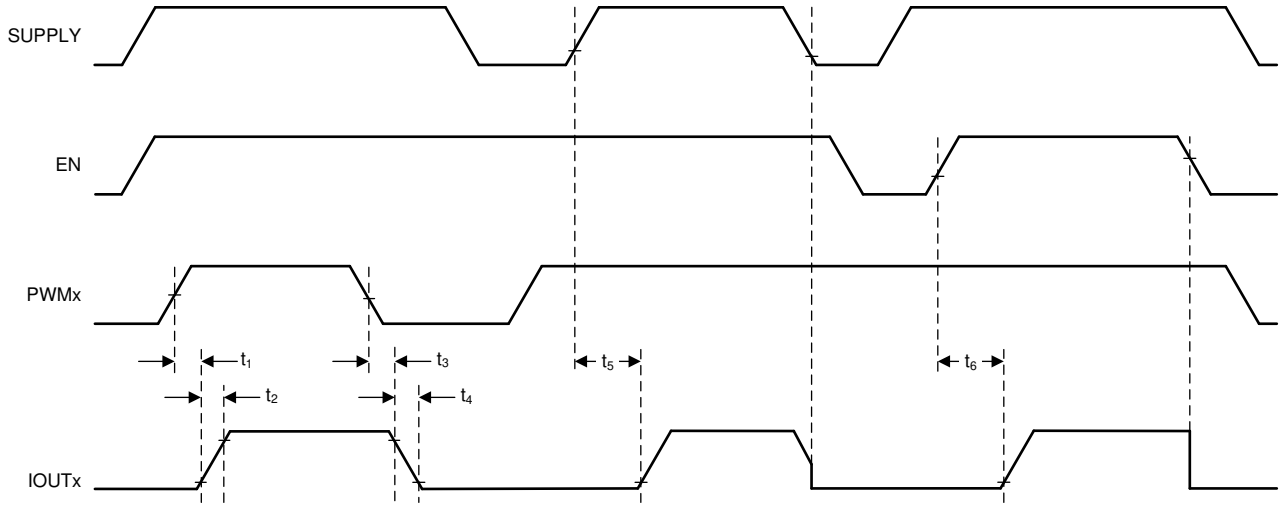

Figure 7-5. Power On Sequency and PWM Dimming Timing

The detailed information and value of each time period in Figure 7-5 is described in Timing Requirements.

The TPS92633-Q1 device has three total PWM input pins, PWM1, PWM2 and PWM3, to control each of current output channel independently. PWM1 input controls the output channel1 for both OUT1 and RES1, PWM2 input controls the output channel2 for both OUT2 and RES2, and PWM3 input controls the output channel3 for both OUT3 and RES3.

7.3.8 Supply Control

The TPS92633-Q1 can support supply control to turn ON and OFF output current. When the voltage applied on the SUPPLY pin is higher than the LED string forward voltage plus needed headroom voltage at required current, and the PWM pin voltage is high, the output current is turned ON and well regulated. However, when the voltage applied on the SUPPLY pin is lower than $V_{(POR_falling)}$, the output current is turned OFF. With this feature, the power supply voltage in designed pattern can control the output current ON/OFF. The brightness is adjustable if the ON/OFF frequency is fast enough. Because of the high accuracy design of PWM threshold in TPS92633-Q1, it enables a resistor divider on the PWM pin to set the SUPPLY threshold higher than LED forward voltage plus required headroom voltage as shown in Figure 7-6. The headroom voltage is basically the summation of $V_{(DROPOUT)}$ and $V_{(CS_REG)}$. When the voltage on the PWM pin is higher than $V_{IH(PWM)}$, the output current is turned ON. However, when the voltage on the PWM is lower than $V_{IL(PWM)}$, the output current is turned OFF. The SUPPLY threshold voltage can be calculated by using Equation 5.

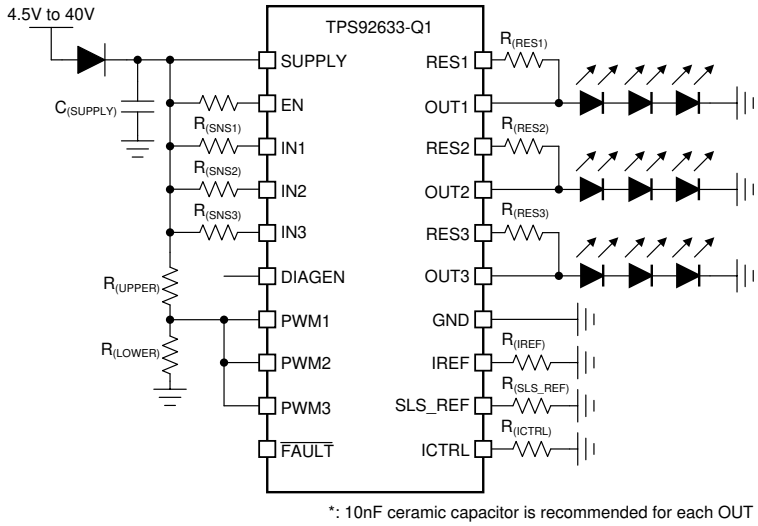

Figure 7-6. Application Schematic For Supply Control LED Brightness

$$V_{(SUPPLY_PWM_th_rising)} = V_{IH(PWM)} \times \left(1 + \frac{R_{(UPPER)}}{R_{(LOWER)}}\right) \tag{5}$$

where

- $V_{IH(PWM)}$ = 1.26 V (maximum)

7.3.9 Diagnostics

The device is able to detect and protect fault from LED-string short-to-GND, LED-string open-circuit, single LED short-circuit and junction over-temperature scenarios. It also supports one-fails–all-fail fault bus design that can flexibly fit different regulatory requirements.

7.3.9.1 IREF Short-to-GND Detection

The TPS92633-Q1 device has IREF short-to-GND detection through monitoring the voltage on the IREF pin. The IREF pin short-to-GND fault is reported by constantly pulling down the $\overline{FAULT}$ pin, if the IREF pin voltage, $V_{(IREF)}$ is lower than $V_{(IREF_SHORT_th)}$ for longer than the deglitch time of $t_{(IREF_deg)}$. The current for all output channels and ICTRL pin are turned off and the current out of IREF pin is clamped to $I_{(IREF_ST_Clamp)}$ when IREF pin short-to-GND fault is detected.

The TPS92633-Q1 recovers to normal operating if the $V_{(IREF)}$ voltage rises up over $V_{(IREF_SHORT_th)}$.

7.3.9.2 IREF Open Detection

The TPS92633-Q1 device has IREF open detection through monitoring the current through the IREF pin. The IREF pin open fault is reported by constantly pulling down the $\overline{FAULT}$ pin, when the current through IREF pin, $I_{(IREF)}$ is lower than $I_{(IREF_OPEN_th)}$ for longer than the deglitch time of $t_{(IREF_deg)}$. The current for all output channels and ICTRL pin are turned off when IREF pin open fault is detected.

The TPS92633-Q1 recovers to normal operating if the $I_{(IREF)}$ current rises up over $I_{(IREF_OPEN_th)}$.

7.3.9.3 LED Short-to-GND Detection

The TPS92633-Q1 device has LED short-to-GND detection. The LED short-to-GND detection monitors the output voltage when the output current is enabled. Once a short-to-GND LED failure is detected, the device turns off the faulty channel and retries automatically, regardless of the state of the PWM input. When the retry mechanism detects the removal of the LED short-to-GND fault, the device resumes to normal operation.

Copyright © 2021 Texas Instruments Incorporated

The TPS92633-Q1 monitors the $V_{(OUTx)}$ voltage and $V_{(RESx)}$ voltage of each channel and compares it with the internal reference voltage to detect a short-to-GND failure. When $V_{(OUTx)}$ or $V_{(RESx)}$ voltage falls below $V_{(SG_th_falling)}$ longer than the deglitch time of $t_{(SG_deg)}$, the device asserts the short-to-GND fault and pulls low the $\overline{FAULT}$ pin. During the deglitch time period, if $V_{(OUTx)}$ and $V_{(RESx)}$ rises above $V_{(SG_th_rising)}$, the timer is reset.

Once the TPS92633-Q1 has asserted a short-to-GND fault, the device turns off the faulty output channel and retries automatically with a small current. During retrying the device sources a small current $I_{(Retry)}$ from SUPPLY to OUT to pull up the LED loads continuously. Once auto-retry detects output voltage rising above $V_{(SG_th_rising)}$, it clears the short-to-GND fault and resumes to normal operation. Figure 7-7 illustrates the timing for LED short-circuit detection, protection, retry and recovery.

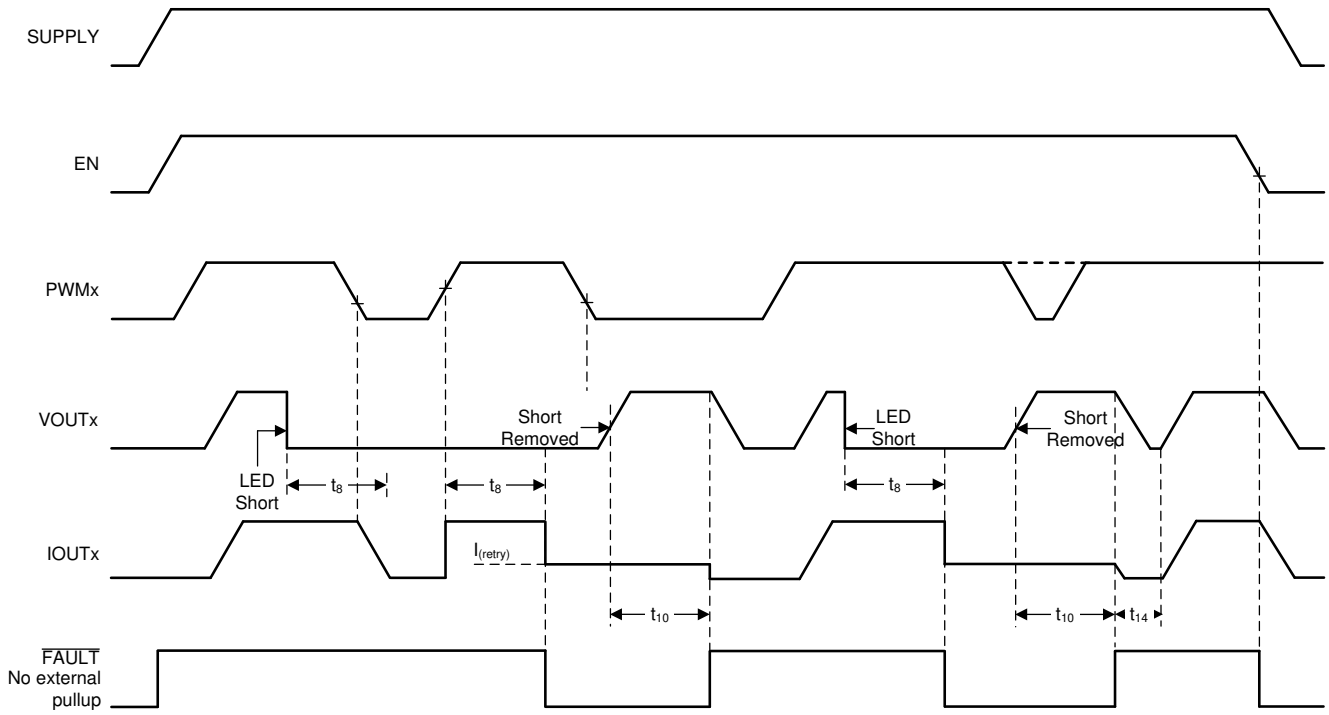

Figure 7-7. LED Short-to-GND Detection and Recovery Timing Diagram

The detailed information and value of each time period in Figure 7-7 is described in Timing Requirements.

7.3.9.4 LED Open-Circuit Detection

The TPS92633-Q1 device has LED open-circuit detection. The LED open-circuit detection monitors the output voltage when the current output is enabled. The LED open-circuit detection is only enabled when DIAGEN is HIGH. A short-to-battery fault is also detected and recognized as an LED open-circuit fault.

The TPS92633-Q1 monitors dropout-voltage differences between the IN and OUT pins for each LED channel when PWM is HIGH. The voltage difference $V_{(INx)} – V_{(OUTx)}$ is compared with the internal reference voltage $V_{(OPEN_th_rising)}$ to detect LED open-circuit incident. When $V_{(OUTx)}$ rises causing $V_{(INx)} – V_{(OUTx)}$ less than the $V_{(OPEN_th_rising)}$ voltage and lasts longer the deglitch time of $t_{(OPEN_deg)}$, the device asserts an open-circuit fault. Once a LED open-circuit failure is detected, the internal constant-current sink pulls down the $\overline{FAULT}$ pin voltage. During the deglitch time period, when $V_{(OUTx)}$ falls and makes $V_{(INx)} – V_{(OUTx)}$ larger than $V_{(OPEN_th_falling)}$, the deglitch timer is reset.

The TPS92633-Q1 shuts down the output current regulation for the faulty channel after LED open-circuit fault is detected. The device sources a small current $I_{(Retry)}$ from SUPPLY to OUT when DIAGEN input is logic High. Once the fault condition is removed, the device resumes normal operation and releases the $\overline{FAULT}$ pin. Figure 7-8 illustrates the timing for LED open-circuit detection, protection, retry and recovery.

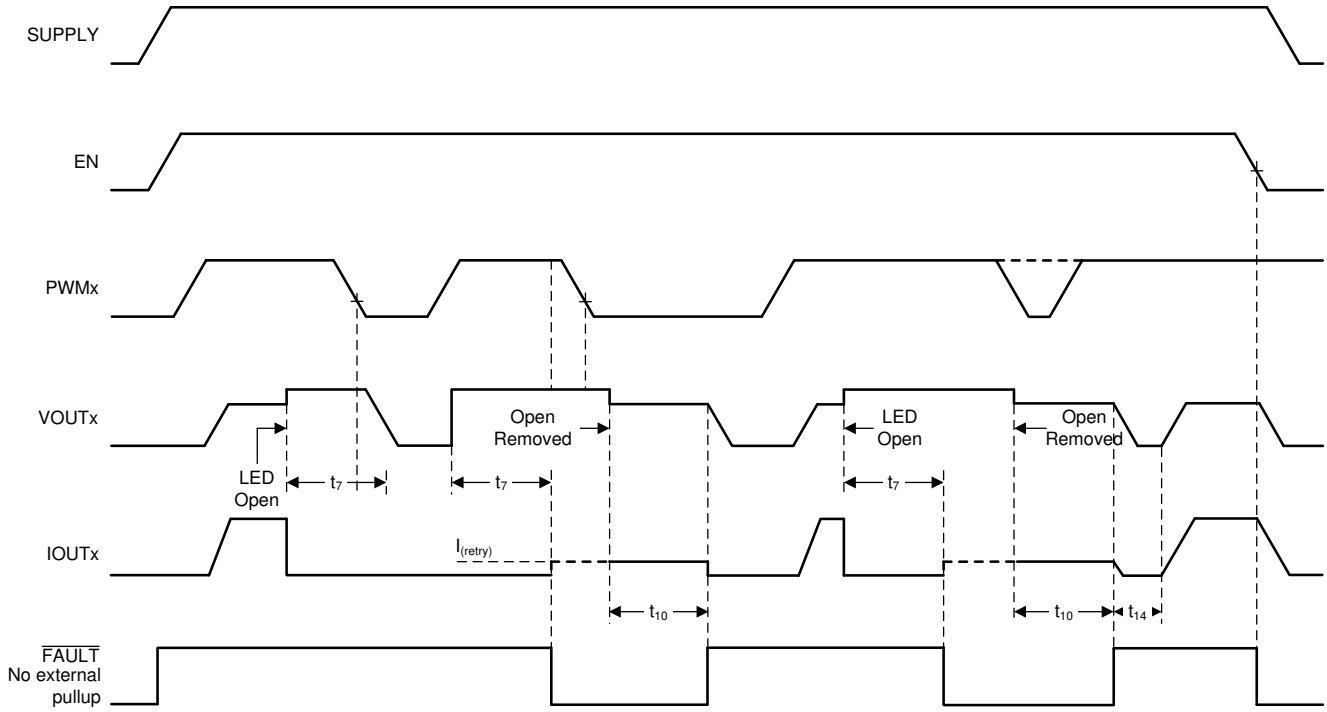

Figure 7-8. LED Open-Circuit Detection and Recovery Timing Diagram

The detailed information and value of each time period in Figure 7-8 is described in Timing Requirements.

7.3.9.5 Single LED Short-Circuit Detection (SLS_REF)

The TPS92633-Q1 device has single LED short-circuit detection. The single LED short-circuit detection monitors the output voltage when the output current is enabled. Once a single LED short-circuit failure is detected, the device turns off the faulty channel and retries automatically, regardless of the state of the PWM input. If the retry mechanism detects the removal of the single LED short-circuit fault, the device resumes to normal operation.

The TPS92633-Q1 monitors the $V_{(OUTx)}$ voltage of each channel and internally compares the scale down voltage of $V_{(OUTx)}$ with an external resistor programmable reference voltage on SLS_REF to detect a single LED short-circuit failure. When the voltage of $V_{(OUTx)}$ falls below $V_{(SLS_th_falling)}$ longer than the deglitch time of $t_{(SLS_deg)}$, the device asserts the single LED short-circuit fault and pulls low the $\overline{FAULT}$ pin. During the deglitch time period, if the scale down voltage of $V_{(OUTx)}$ rises above $V_{(SLS_th_rising)}$, the timer is reset.

Once the TPS92633-Q1 has asserted a single LED short-circuit fault, the device turns off the faulty output channel and retries automatically. During retrying the device sources full current from IN to OUT to pull up the LED loads every 10 ms for 300-µs period when the PWM input is logic high for the faulty channel. Once auto-retry detects the voltage of $V_{(OUTx)}$ rising above $V_{(SLS_th_rising)}$, it clears the single LED short-circuit fault and resumes to normal operation. The $V_{(SLS_th_rising)}$ is 2.5% higher the $V_{(SLS_th_falling)}$. The scale down ratio for $V_{(OUTx)}$ is $N_{(OUT)}$. Figure 7-9 describes internal diagram for single LED short-circuit detection circuit. And the $V_{(SLS_th_falling)}$ threshold voltage for single LED short-circuit is calculated by using Equation 6.

Copyright © 2021 Texas Instruments Incorporated

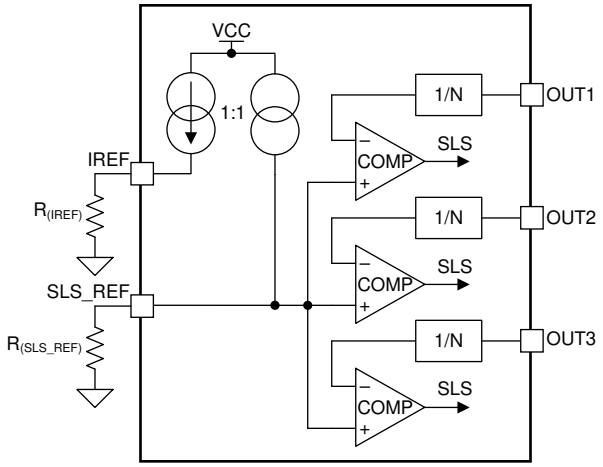

Figure 7-9. Single LED Short-Circuit Detection Block Diagram

$$V_{(SLS_th_falling)} = \frac{N_{(OUT)} \times R_{(SLS_REF)} \times V_{(IREF)} \times N_{(SLS_REF)}}{R_{(IREF)}} \quad (6)$$

where

- $V_{(IREF)}$ = 1.235 V (typical)
- $R_{(IREF)}$ = 12.3 kΩ recommended
- $R_{(SLS_REF)}$ is in kΩ unit
- $N_{(OUT)}$ = 4 (typical)
- $N_{(SLS_REF)}$ = 1 (typical)

The calculated result for $V_{(SLS_th_falling)}$ is 5.34 V when $R_{(IREF)}$ is 12.3 kΩ and $R_{(SLS_REF)}$ is 13.3 kΩ.

Figure 7-10 illustrates the timing for single-LED short-circuit detection, protection, retry and recovery.

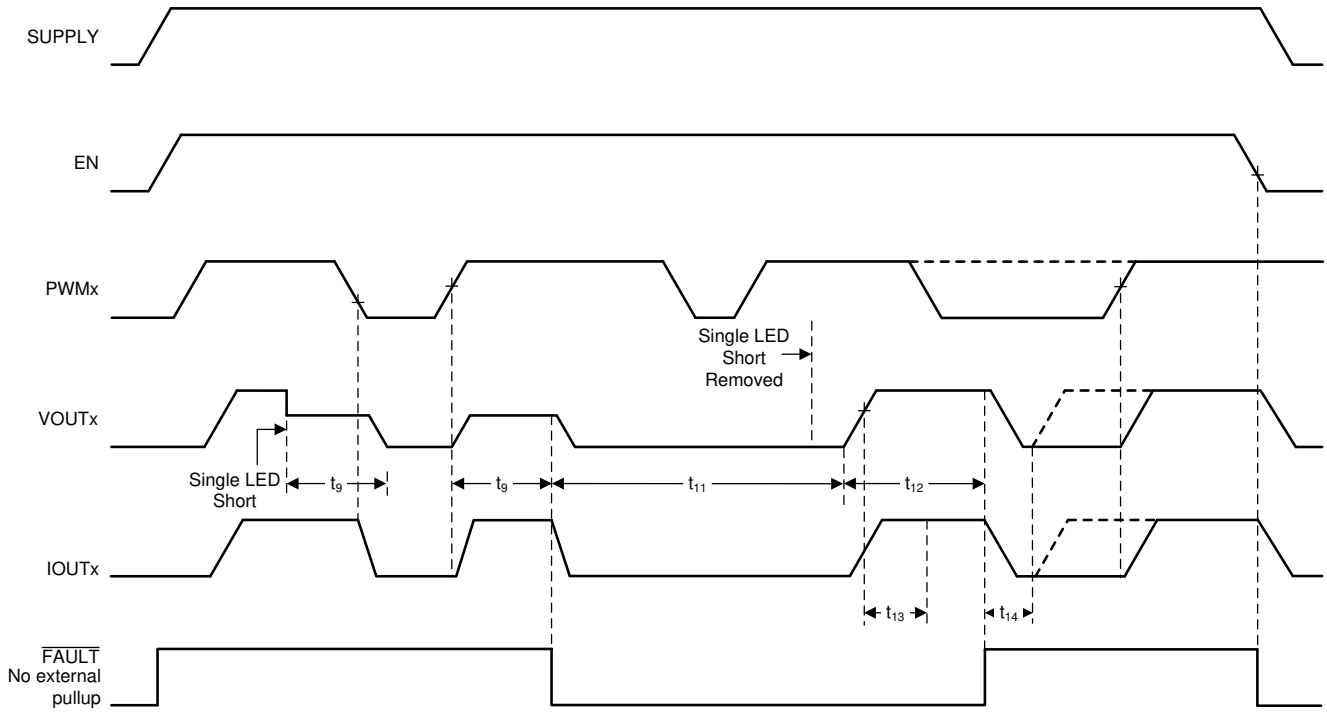

Figure 7-10. Single LED Short-Circuit Detection and Recovery Timing Diagram

The detail information and value of each time period in Figure 7-10 is described in Timing Reqquirements.

7.3.9.6 LED Open-Circuit and Single LED Short-Circuit Detection Enable (DIAGEN)

The TPS92633-Q1 device supports the DIAGEN pin with an accurate threshold to disable the LED open-circuit and single LED short-circuit diagnostic functions. The DIAGEN pin can be used to enable or disable LED open-circuit detection and single LED short-circuit detection based on SUPPLY pin voltage sensed by an external resistor divider as illustrated in Figure 7-11. When the voltage applied on DIAGEN pin is higher than the threshold $V_{IH(DIAGEN)}$, the device enables LED open-circuit and single LED short-circuit diagnosis. When $V_{(DIAGEN)}$ is lower than the threshold $V_{IL(DIAGEN)}$, the device disables LED open-circuit and single LED short-circuit detection.

Only LED open-circuit detection and single LED short-circuit detection can be disabled by pulling down the DIAGEN pin. The LED short-to-GND detection and over-temperature protection cannot be turned off by pulling down the DIAGEN pin. The SUPPLY threshold voltage can be calculated by using Equation 7.

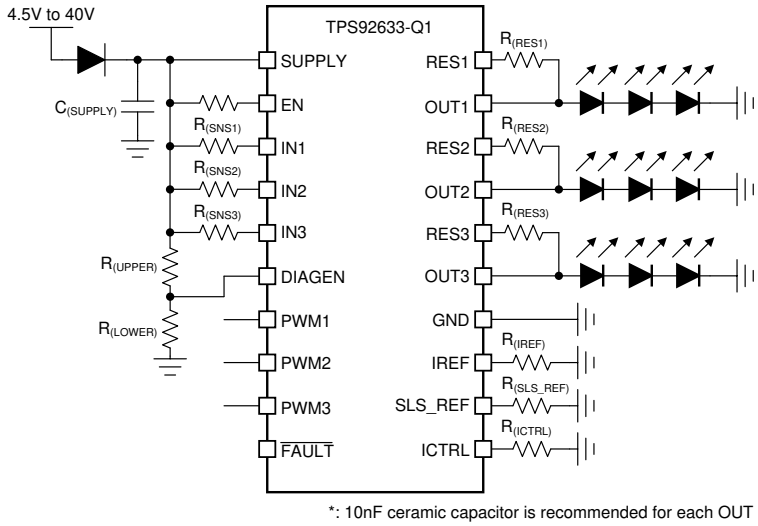

Figure 7-11. Application Schematic For DIAGEN

$$V_{(SUPPLY_DIAGEN_th_falling)} = V_{IL(DIAGEN)} \times \left(1 + \frac{R_{(UPPER)}}{R_{(LOWER)}}\right) \tag{7}$$

where

- $V_{IL(DIAGEN)}$ = 1.045 V (minimum)

7.3.9.7 Low Dropout Operation

When the supply voltage drops below LED string total forward voltage plus headroom voltage at required current, the TPS92633-Q1 device operates in low-dropout conditions to deliver current output as close as possible to target value. The actual current output is less than preset value due to insufficient headroom voltage for power transistor. As a result, the voltage across the sense resistor fails to reach the regulation target. The headroom voltage is the summation of $V_{(DROPOUT)}$ and $V_{(CS_REG)}$.

If the TPS92633-Q1 is designed to operate in low-dropout condition, the open-circuit diagnostics and single LED short-circuit detection must be disabled by pulling the DIAGEN pin voltage lower than $V_{IL(DIAGEN)}$. Otherwise, the TPS92633-Q1 detects an open-circuit fault or single LED short-circuit fault and reports a fault on the $\overline{FAULT}$ pin. The DIAGEN pin is used to avoid false diagnostics due to low supply voltage.

Copyright © 2021 Texas Instruments Incorporated

7.3.9.8 Over-Temperature Protection

The TPS92633-Q1 device monitors device junction temperature. When the junction temperature reaches thermal shutdown threshold $T_{(TSD)}$, the output shuts down. Once the junction temperature falls below $T_{(TSD)}$ – $T_{(TSD_HYS)}$, the device recovers to normal operation. During over-temperature protection, the $\overline{FAULT}$ pin is pulled low.

7.3.10 FAULT Bus Output With One-Fails–All-Fail

During normal operation, The $\overline{FAULT}$ pin of TPS92633-Q1 is weakly pulled up by an internal pullup current source, $I_{(FAULT_pullup)}$. If any fault scenario occurs, the $\overline{FAULT}$ pin is strongly pulled low by the internal pulldown current sink, $I_{(FAULT_pulldown)}$ to report out the fault alarm.

Meanwhile, the TPS92633-Q1 also monitors the $\overline{FAULT}$ pin voltage internally. If the $\overline{FAULT}$ pin of the TPS92633-Q1 is pulled low by external current sink below $V_{IL(FAULT)}$, the current output is turned off even though there is no fault detected on owned outputs. The device does not resume to normal operation until the $\overline{FAULT}$ pin voltage rises above $V_{IH(FAULT)}$.

Based on this feature, the TPS92633-Q1 device is able to construct a FAULT bus by tying $\overline{FAULT}$ pins from multiple TPS92633-Q1 devices to achieve one-fails-all-fail function as Figure 7-12 showing. The lower side TPS92633-Q1 (B) detects any kind of LED fault and pulls low the $\overline{FAULT}$ pin. The low voltage on $\overline{FAULT}$ pin is detected by upper side TPS926133-Q1 (A) because the $\overline{FAULT}$ pins are connected of two devices. The upper side TPS92633-Q1 (A) turns off all output current for each channel as a result. If the $\overline{FAULT}$ pins of each TPS92633-Q1 are all connected to drive the base of an external PNP transistor as illustrated in Figure 7-13, the one-fails–all-fail function is disabled and only the faulty channel is turned off.

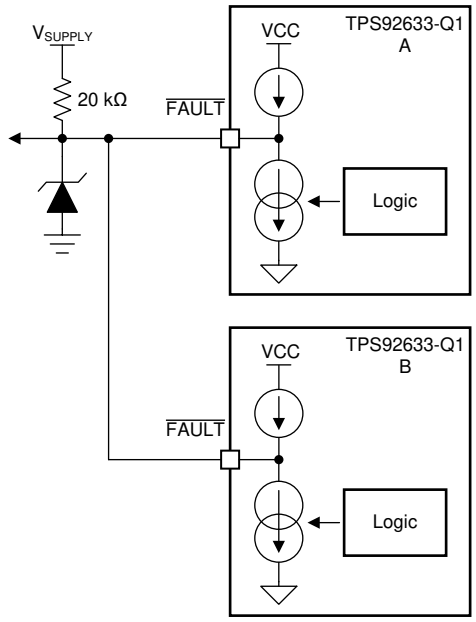

Figure 7-12. FAULT Bus For One-Fails-All-Fail Application

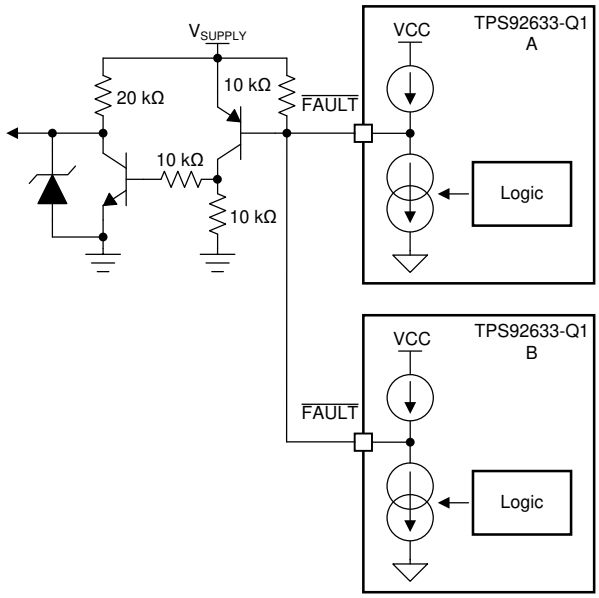

Figure 7-13. FAULT Bus For One-Fails-Others-On Application

7.3.11 FAULT Table

Table 7-1. FAULT Table With DIAGEN = HIGH (Full Function)

FAULT BUS STATUS	FAULT TYPE	DETECTION MECHANISM	CONTROL INPUT	DEGLITCH TIME	$\overline{\text{FAULT}}$ ACTION	FAULT HANDLING ROUTINE	FAULT RECOVERY
$\overline{\text{FAULT}}$ = H	IREF short-to-GND	$V_{(IREF)}$ < $V_{(IREF_SHORT_th)}$	EN = H	$t_{(IREF_deg)}$	Constant-current pulldown	Device turns all output off. IREF current clamps to $I_{(IREF_ST_Clamp)}$. ICTRL current output are turned off.	Auto recovery
	IREF open	$I_{(IREF)}$ < $I_{(IREF_OEPN_th)}$	EN = H	$t_{(IREF_deg)}$	Constant-current pulldown	Device turns all output off. ICTRL current are turned off too.	Auto recovery
	SLS_REF short-to-GND	No detection	EN = H	N/A	No Action	$V_{(SLS_th_falling)}$= 0 V.	Auto recovery
	SLS_REF open	No detection	EN = H	N/A	No Action	Disable single-LED short-circuit detection.	Auto recovery
	ICTRL short-to-GND	No detection	EN = H	N/A	No Action	$V_{(CS_REG)}$ = 50 mV.	Auto recovery
	ICTRL open	No detection	EN = H	N/A	No Action	$V_{(CS_REG)}$ = 400 mV.	Auto recovery
	Open-circuit or short-to-supply	$V_{(IN)} – V_{(OUT)}$ < $V_{(OPEN_th_rising)}$	EN = H and PWMx = H	$t_{(OPEN_deg)}$	Constant-current pulldown	Device turns failed output off and retries with constant current $I_{(retry)}$, ignoring the PWM input.	Auto recovery
	Short-to-ground	$V_{(OUT)}$ < $V_{(SG_th_falling)}$ OR $V_{(RES)}$ < $V_{(SG_th_falling)}$	EN = H and PWMx = H	$t_{(SG_deg)}$	Constant-current pulldown	Device turns failed output off and retries with constant current $I_{(retry)}$, ignoring the PWM input.	Auto recovery
	Single LED short-circuit	$V_{(IN)} – V_{(OUT)}$ > $V_{(OPEN_th_falling)}$ & $V_{(SG_th_falling)}$ < $V_{(OUT)}$ < $V_{(SLS_th_falling)}$	EN = H and PWMx = H	$t_{(SLS_deg)}$	Constant-current pulldown	Device turns failed output off and retries every 10 ms by turning output on for 300 µs when PWM input is logic high.	Auto recovery
	Over-temperature	T_J > $T_{(TSD)}$	EN = H	$t_{(TSD_deg)}$	Constant-current pulldown	Device turns all output channels off, SLS_REF and ICTRL off.	Auto recovery
$\overline{\text{FAULT}}$ = L	Fault is detected	Device turns off remained channels in operation.					
	No fault is detected	Device turns all output channels off, IREF, SLS_REF and ICTRL off.					

Copyright © 2021 Texas Instruments Incorporated

Table 7-2. FAULT Table With DIAGEN = LOW (Full Function)

FAULT BUS STATUS	FAULT TYPE	DETECTION MECHANISM	CURRENT OUTPUT	DEGLITCH TIME	FAULT BUS	FAULT HANDLING ROUTINE	FAULT RECOVERY
$\overline{FAULT}$= H	IREF short-to-GND	$V_{(IREF)}$ < $V_{(IREF_SHORT_th)}$	EN = H	$t_{(IREF_deg)}$	Constant-current pulldown	Device turns all output off. IREF current clamps to $I_{(IREF_ST_Clamp)}$. ICTRL current output are turned off.	Auto recovery
	IREF open	$I_{(IREF)}$ < $I_{(IREF_OPEN_th)}$	EN = H	$t_{(IREF_deg)}$	Constant-current pulldown	Device turns all output off. ICTRL current are turned off too.	Auto recovery
	SLS_REF short-to-GND	No detection	EN = H	N/A	No Action	$V_{(SLS_th_falling)}$= 0 V.	Auto recovery
	SLS_REF open	No detection	EN = H	N/A	No Action	Disable single-LED short-circuit detection.	Auto recovery
	ICTRL short-to-GND	No detection	EN = H	N/A	No Action	$V_{(CS_REG)}$ = 50 mV.	Auto recovery
	ICTRL open	No detection	EN = H	N/A	No Action	$V_{(CS_REG)}$ = 400 mV.	Auto recovery
	Open-circuit or short-to-supply	Ignored					
	Single LED short-circuit						
	Short-to-ground	$V_{(OUT)}$ < $V_{(SG_th_falling)}$ OR $V_{(RES)}$ < $V_{(SG_th_falling)}$	EN = H and PWMx = H	$t_{(SG_deg)}$	Constant-current pulldown	Device turns output off and retries with constant current $I_{(retry)}$, ignoring the PWM input.	Auto recovery
	Over-temperature	T_J > $T_{(TSD)}$	EN = H	$t_{(TSD_deg)}$	Constant-current pulldown	Device turns all output channels off, SLS_REF and ICTRL off.	Auto recovery
$\overline{FAULT}$= L	Fault is detected	Device turns all output channels off and keeps retry on the failed channels.					
	No fault is detected	Device turns all output channels off, IREF, SLS_REF and ICTRL off.					

7.3.12 LED Fault Summary

Table 7-3. LED Connection Fault Summary

Case 1	Case 2	Case 3	Case 4
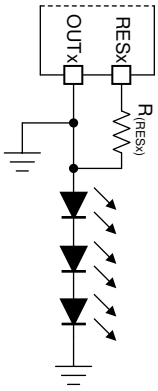	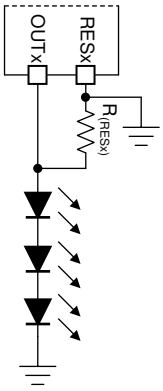	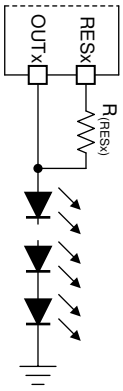	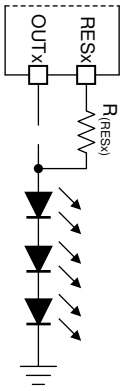
LED Short-to-GND Fault	LED Short-to-GND Fault	LED Open Fault	LED Open Fault
Case 5	**Case 6**	**Case 7**	**Case 8**
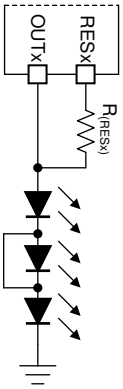	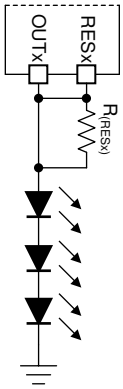	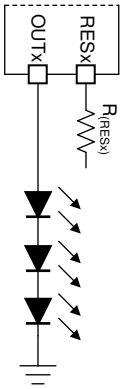	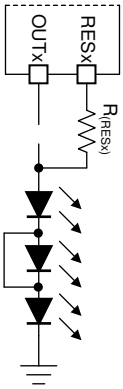
Single-LED-Short Fault	No Fault	No Fault	LED Open Fault

Copyright © 2021 Texas Instruments Incorporated

7.3.13 IO Pins Inner Connection

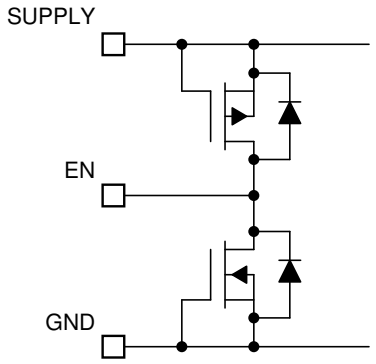

Figure 7-14. EN Pin

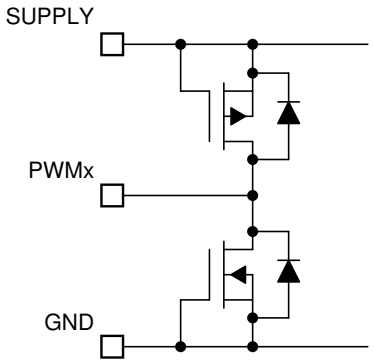

Figure 7-15. PWM1, PWM2 and PWM3 Pins

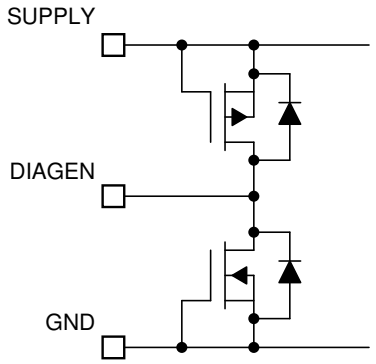

Figure 7-16. DIAGEN Pin

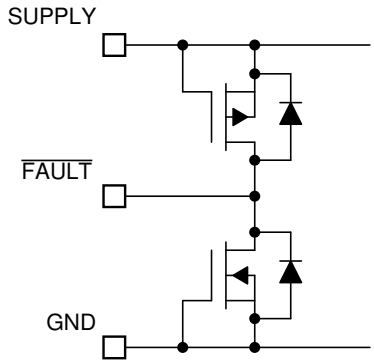

Figure 7-17. $\overline{\text{FAULT}}$ Pin

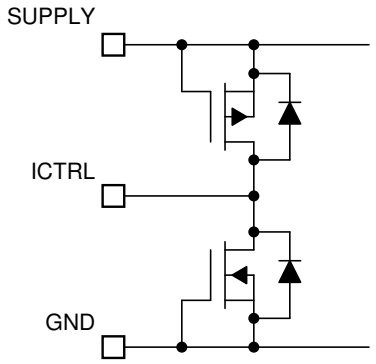

Figure 7-18. ICTRL pin

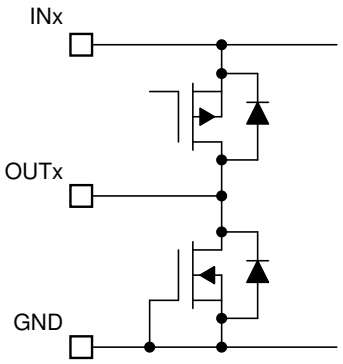

Figure 7-19. OUT1, OUT2 and OUT3 Pins

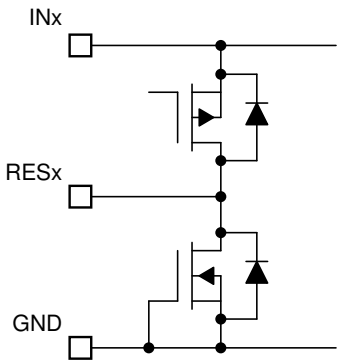

Figure 7-20. RES1, RES2 and RES3 Pins

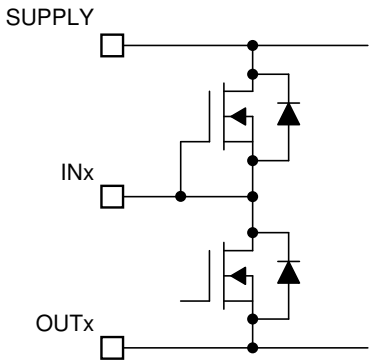

Figure 7-21. IN1, IN2 and IN3 Pins

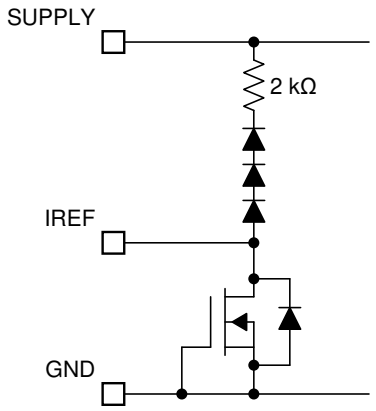

Figure 7-22. IREF Pin

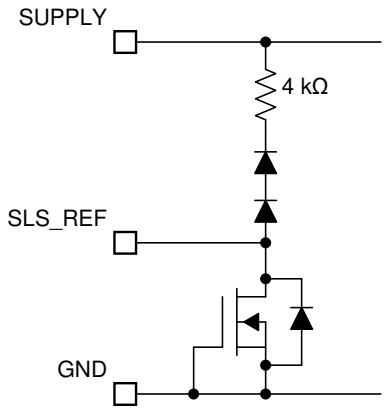

Figure 7-23. SLS_REF Pin

Copyright © 2021 Texas Instruments Incorporated

7.4 Device Functional Modes

7.4.1 Undervoltage Lockout, $V_{(SUPPLY)} < V_{(POR_rising)}$

When the device is in undervoltage lockout status, the TPS92633-Q1 device disables all functions until the supply rises above the $V_{(POR_rising)}$ threshold.

7.4.2 Normal Operation $V_{(SUPPLY)} \geq 4.5$ V

The device drives an LED string in normal operation. With enough voltage drop across SUPPLY and OUT, the device is able to drive the output in constant-current mode.

7.4.3 Low-Voltage Dropout Operation

When the device drives an LED string in low-dropout operation, if the $V_{(DROPOUT)}$ is less than the open-circuit detection threshold, the device may report a false open-circuit fault or single LED short-circuit fault. TI recommends only enabling the open-circuit detection and single LED short-circuit detection when SUPPLY voltage is enough higher than LED string voltage to avoid a false open-circuit detection.

7.4.4 Fault Mode

When the device detects any fault, the device tries to pull down the $\overline{FAULT}$ pin with a constant current. If the FAULT bus is pulled down, the device switches to fault mode and consumes a fault current of $I_{(Fault)}$.

8 Application and Implementation

Note

Information in the following applications sections is not part of the TI component specification, and TI does not warrant its accuracy or completeness. TI's customers are responsible for determining suitability of components for their purposes, as well as validating and testing their design implementation to confirm system functionality.

8.1 Application Information

In automotive lighting applications, thermal performance and LED diagnostics are always design challenges for linear LED drivers.

The TPS92633-Q1 device is capable of detecting LED open-circuit, LED short-circuits and single-LED short-circuit. To increase current driving capability, the TPS92633-Q1 device supports using an external shunt resistor to help dissipate heat as following section Thermal Sharing Resistor describes. This method provides a low-cost solution of using external resistors to minimize thermal accumulation on the device itself due to large voltage difference between input voltage and LED string forward voltage, while still keeping high accuracy of the total current output.

8.2 Typical Applications

8.2.1 BCM Controlled Rear Lamp with One-Fails-All-Fail Setup

The multiple TPS92633-Q1 devices are capable to drive different functions for automotive rear lamp including stop, turn indicator, tail, fog, reverse and center-high-mounted-stop-lamp. The One-Fails-all-Fail single lamp mode can be easily achieved by FAULT bus by shorting the $\overline{FAULT}$ pins.

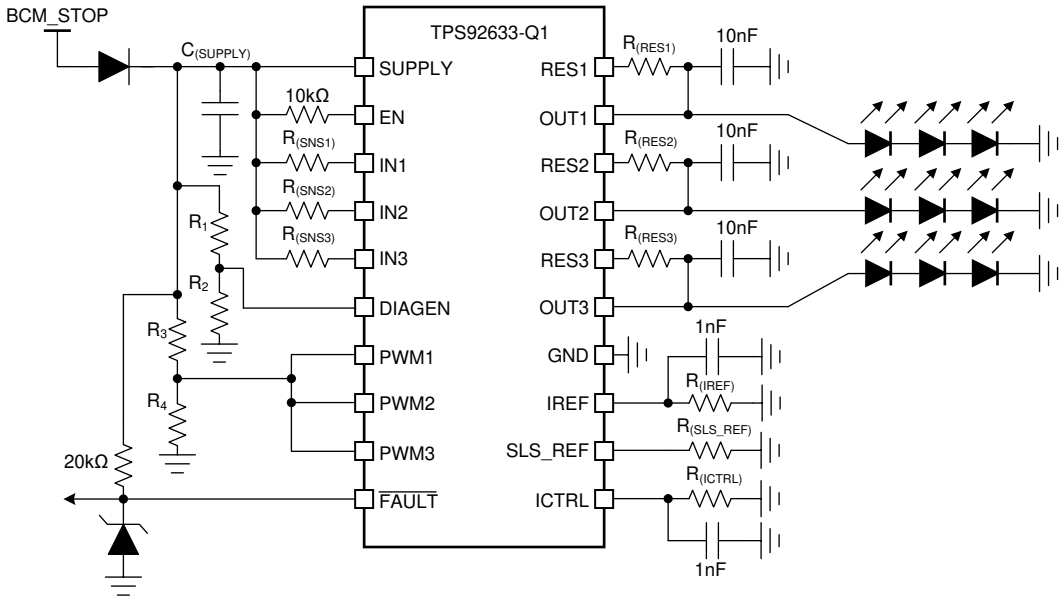

Figure 8-1. Typical Application Schematic

8.2.1.1 Design Requirements

Input voltage range is from 9 V to 16 V, and a total 9 LEDs, with 3 LEDs in each string required to achieve stop function. The LED maximum forward voltage, V_{F_MAX} is 2.5 V for each LED, however the minimum forward voltage, V_{F_MIN} is 1.9 V. The current requirement for each LED, $I_{(LED)}$ is 140 mA. The LED brightness and ON/OFF control is manipulated by body control module, BCM, directly by connecting and disconnecting the power supply to the LED load. Single-LED short-circuit detection is also required.

Copyright © 2021 Texas Instruments Incorporated

8.2.1.2 Detailed Design Procedure

STEP 1: Determine the reference current setting resistor, $\mathbf{R_{(IREF)}}$, by using Equation 8.

$$R_{(IREF)} = \frac{V_{(IREF)}}{I_{(IREF)}} \tag{8}$$

where

- $V_{(IREF)}$ = 1.235 V (typical)
- $I_{(IREF)}$ = 100 µA (recommended)

TI recommends 100 µA current for reference current, $I_{(IREF)}$ if the ICTRL resistor is placed in the same board with TPS92633-Q1. The calculated result for $R_{(IREF)}$ is 12.3 kΩ when $I_{(IREF)}$ = 100 µA.

STEP 2: Design the ICTRL resistor, $\mathbf{R_{(ICTRL)}}$, for setting the regulation voltage, $V_{(CS_REG)}$ by using Equation 9.

$$R_{(ICTRL)} = \frac{V_{(CS_REG)} \times 17}{I_{(IREF)} \times 25} \tag{9}$$

where

- $V_{(CS_REG)}$ = 100 mV (recommended)
- $I_{(IREF)}$ = 100 µA (recommended)

TI recommends 100 mV for reference voltage across current sensing resistor, $R_{(SNSx)}$ if the ICTRL pin is not used for driving off-board binning resistor or NTC resistor. The calculated result for $R_{(ICTRL)}$ is 680 Ω when $V_{(CS_REG)}$ = 100 mV.

STEP 3: Determine the current sensing resistor, $\mathbf{R_{(SNSx)}}$, by using Equation 10.

$$R_{(SNSx)} = \frac{V_{(IREF)} \times R_{(ICTRL)} \times 25}{R_{(IREF)} \times I_{(OUTx_Tot)} \times 17} \tag{10}$$

where

- $V_{(IREF)}$ = 1.235 V (typical)
- $R_{(ICTRL)}$ = 680 Ω
- $R_{(IREF)}$ = 12.3 kΩ
- $I_{(OUTx_Tot)}$ = 140 mA

According to design requirements, output current for each channel is same so that the $R_{(SNS1)}$ = $R_{(SNS2)}$ = $R_{(SNS3)}$ = 0.717 Ω. Two resistors in parallel are required to achieve equivalent 0.717-Ω resistance because 0.717 Ω is not a standard decade resistance value.

STEP 4: Design the current distribution between $I_{(OUTx)}$ and $I_{(RESx)}$, and calculate the current sharing resistor, $\mathbf{R_{(RESx)}}$ by using Equation 11. The $R_{(RESx)}$ value actually decides the current distribution for $I_{(OUTx)}$ path and $I_{(RESx)}$ path, basic principle is to design the $R_{(RESx)}$ to consume appropriate 50% total power dissipation at typical supply operating voltage.

$$R_{(RESx)} = \frac{V_{(SUPPLY)} - V_{(OUTx)}}{I_{(OUTx_Tot)} \times 0.5} \tag{11}$$

where

- $V_{(SUPPLY)}$ = 12 V (typical)

- $I_{(OUTx_Tot)}$ = 140 mA

The calculated result for $R_{(RESx)}$ resistor value including $R_{(RES1)}$, $R_{(RES2)}$ and $R_{(RES3)}$ is 75 Ω when $V_{(OUTx)}$ is typical 3 × 2.2 V = 6.6 V.

STEP 5: Design the single-LED short-circuit threshold voltage and calculate the value of $\mathbf{R_{(SLS_REF)}}$ resistor for setting single-LED short-circuit threshold by using Equation 12.

The total forward voltage for three LEDs in serial is 3 × 2.5 V = 7.5-V maximum and 3 × 1.9 V = 5.7-V minimum. Once anyone of three LEDs is defective with short-circuit behavior, the total forward voltage for remaining two LEDs in serial is 2 × 2.5 V = 5-V maximum and 2 × 1.9 V = 3.8-V minimum. So the 5.3 V is selected to be threshold for single-LED short-circuit, $V_{(SLS_th_falling)}$.

$$R_{(SLS_REF)} = \frac{V_{(SLS_th_falling)} \times R_{(IREF)}}{N_{(OUT)} \times V_{(IREF)} \times N_{(SLS_REF)}} \tag{12}$$

where

- $V_{(IREF)}$ = 1.235 V (typical)
- $R_{(IREF)}$ = 12.3 kΩ
- $N_{(OUT)}$ = 4
- $N_{(SLS_REF)}$ = 1

The calculated result for $R_{(SLS_REF)}$ is 13.3 kΩ for $V_{(SLS_th_falling)}$ is 5.34 V.

STEP 6: Design the threshold voltage of SUPPLY to enable the LED open-circuit and single-LED short-circuit diagnostics, and calculate voltage divider resistor value for **R1** and **R2** on DIAGEN pin.

The maximum forward voltage of LED-string is 3 × 2.5 V = 7.5 V. To avoid the open-circuit fault or single-LED short-circuit reported in low-dropout operation conditions, additional headroom between SUPPLY and OUTx needs to be considered. The TPS92633-Q1 device must disable open-circuit detection and single-LED short-circuit detection when the supply voltage is below LED-string maximum forward voltage plus $V_{(OPEN_th_rising)}$ and $V_{(CS_REG)}$. The voltage divider resistor, R1 and R2 value can be calculated by Equation 13.

$$R_1 = \left(\frac{V_{(OPEN_th_rising)} + V_{(CS_REG)} + V_{(OUTx)}}{V_{IL(DIAGEN)}} - 1 \right) \times R_2 \tag{13}$$

where

- $V_{(OPEN_th_rising)}$ = 210 mV (maximum)
- $V_{(CS_REG)}$ = 100 mV
- $V_{IL(DIAGEN)}$ = 1.045 V (minimum)
- R_2 = 10 kΩ (recommended)

The calculated result for R1 is 64.9 kΩ when $V_{(OUTx)}$ maximum voltage is 7.5 V and $V_{(CS_REG)}$ is 100 mV.

STEP 7: Design the threshold voltage of SUPPLY to turn on and off each channel of LED, and calculate voltage divider resistor value for **R3** and **R4** on PWM input pin.

The minimum forward voltage of LED-string is 3 × 1.9 V = 5.7 V. To make sure the current output on each of LED-string is normal, each LED-string needs to be turned off when SUPPLY voltage is lower than LED minimum required forward voltage plus dropout voltage between INx to OUTx and $V_{(CS_REG)}$. The voltage divider resistor, R3 and R4 value can be calculated by Equation 14.

$$R_3 = \left(\frac{V_{(DROPOUT)} + V_{(CS_REG)} + V_{(OUTx)}}{V_{IH(PWM)}} - 1 \right) \times R_4 \tag{14}$$

Copyright © 2021 Texas Instruments Incorporated

where

- $V_{(DROPOUT)}$ = 300 mV (typical)
- $V_{(CS_REG)}$ = 100 mV
- $V_{IH(PWM)}$ = 1.26 V (maximum)
- R_4 = 10 kΩ (recommended)

The calculated result for R3 is 38.3 kΩ when $V_{(OUTx)}$ minimum voltage is 5.7 V and $V_{(CS_REG)}$ is 100 mV.

8.2.1.3 Application Curves

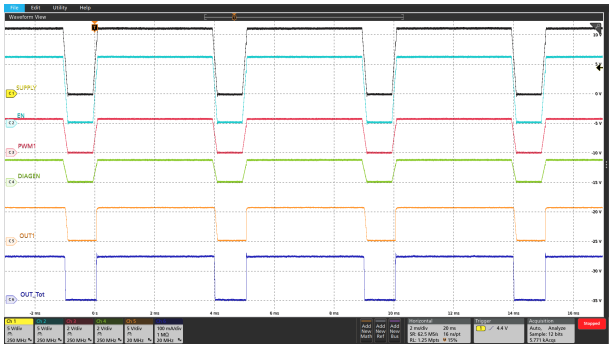

Ch1 = $V_{(SUPPLY)}$ Ch2 = $V_{(EN)}$ Ch3 = $V_{(PWM1)}$
Ch4 = $V_{(DIAGEN)}$ Ch5 = $V_{(OUT1)}$ Ch6 = $I_{(OUT_Tot)}$

Figure 8-2. Supply Dimming 80% Brightness

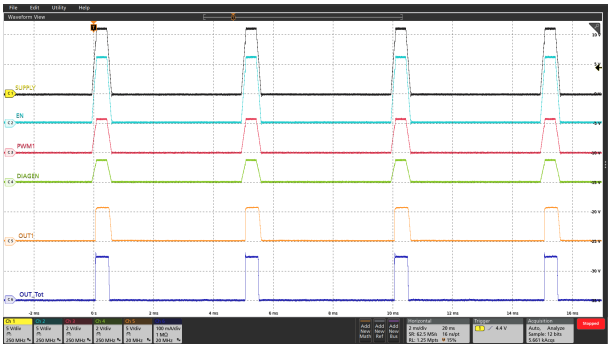

Ch1 = $V_{(SUPPLY)}$ Ch2 = $V_{(EN)}$ Ch3 = $V_{(PWM1)}$
Ch4 = $V_{(DIAGEN)}$ Ch5 = $V_{(OUT1)}$ Ch6 = $I_{(OUT_Tot)}$

Figure 8-3. Supply Dimming 20% Brightness

8.2.2 Independent PWM Controlled Rear Lamp with Off Board LED and Binning Resistor

The TPS92633-Q1 device is able to drive the each current output channel independently by PWM input at PWM1, PWM2 and PWM3 pins. The LED and LED binning resistor can be placed in different PCB to the TPS92633-Q1 device. The LED binning resistor is connected to the ICTRL pin to set the LED current accordingly.

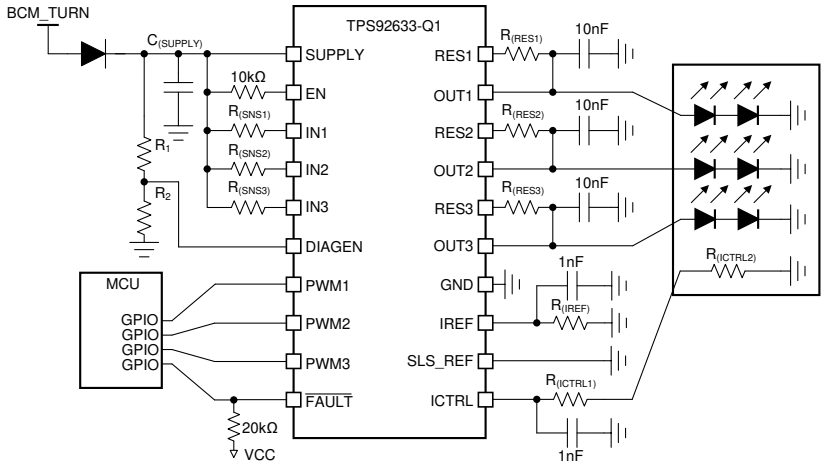

Figure 8-4. Typical Application Schematic

8.2.2.1 Design Requirements

Input voltage range is from 9 V to 16 V, and a total 6 LEDs, with 2 LEDs in each string required to achieve turn indicator function. The LED maximum forward voltage, V_{F_MAX} is 2.5 V for each LED, however the minimum forward voltage, V_{F_MIN} is 1.9 V. The binning resistor for LED is placed with LED units together in another PCB out of LED driver board. The LED current is 50 mA, 75 mA and 100 mA depending on the brightness bin. Each current output channel is independently controlled by MCU through individual GPIO. Single-LED short-circuit detection is not required.

8.2.2.2 Detailed Design Procedure

TI recommends to short the SLS_REF pin to GND when single-LED short-circuit is not required.

STEP 1: Determine the reference current setting resistor, $\mathbf{R_{(IREF)}}$, by using Equation 15.

$$R_{(IREF)} = \frac{V_{(IREF)}}{I_{(IREF)}} \tag{15}$$

where

- $V_{(IREF)}$ = 1.235 V (typical)
- $I_{(IREF)}$ = 200 µA (recommended for off-board binning resistor)

TI recommends 200-µA current for reference current, $I_{(IREF)}$ if the ICTRL resistor is placed in the other board with TPS92633-Q1. The calculated result for $R_{(IREF)}$ is 6.19 kΩ when $I_{(IREF)}$ = 200 µA.

STEP 2: Design the ICTRL resistor, $\mathbf{R_{(ICTRL1)}}$ and $\mathbf{R_{(ICTRL2)}}$, for setting the regulation voltage, $V_{(CS_REG)}$, by using Equation 16.

$$R_{(ICTRL1)} + R_{(ICTRL2)} = \frac{V_{(CS_REG)} \times 17}{I_{(IREF)} \times 25} \tag{16}$$

where

Copyright © 2021 Texas Instruments Incorporated

- $I_{(IREF)}$ = 200 µA (recommended for off-board binning resistor)

TI recommends 80 mV, 120 mV and 160 mV or reference voltage across current sensing resistor, $R_{(SNSx)}$, for three different brightness binning LED. The calculated result for $R_{(ICTRL1)}$ and $R_{(ICTRL2)}$ for different brightness bin LED is listed in Table 8-1. It is recommended to choose as large as possible $R_{(ICTRL1)}$ to achieve the highest noise immunity.

STEP 3: Determine the current sensing resistor, $\mathbf{R_{(SNSx)}}$, by using Equation 17.

$$R_{(SNSx)} = \frac{V_{(IREF)} \times R_{(ICTRL)} \times 25}{R_{(IREF)} \times I_{(OUTx_Tot)} \times 17} \tag{17}$$

where

- $V_{(IREF)}$ = 1.235 V (typical)
- $R_{(IREF)}$ = 6.19 kΩ

According to design requirements, output current for each channel is same so that the $R_{(SNS1)}$ = $R_{(SNS2)}$ = $R_{(SNS3)}$. The calculated result for $R_{(SNSx)}$ is listed in Table 8-1.

Table 8-1. Calculated Resistor Table

	LED Brightness Group A	LED Brightness Group B	LED Brightness Group C
$I_{(OUTx_Tot)}$	50 mA	75 mA	100 mA
$V_{(CS_REG)}$	80 mV	120 mV	160 mV
$R_{(ICTRL1)}$ + $R_{(ICTRL2)}$	272 Ω	408 Ω	544 Ω
$R_{(ICTRL1)}$	270 Ω		
$R_{(ICTRL2)}$	2 Ω	140 Ω	274 Ω
$R_{(SNSx)}$	1.6 Ω		

STEP 4: Design the current distribution between $I_{(OUTx)}$ and $I_{(RESx)}$ and calculate the current sharing resistor, $\mathbf{R_{(RESx)}}$, by using Equation 18. The $R_{(RESx)}$ value actually decides the current distribution for $I_{(OUTx)}$ path and $I_{(RESx)}$ path, basic principle is to design the $R_{(RESx)}$ to consume appropriate 50% total power dissipation at typical supply operating voltage.

$$R_{(RESx)} = \frac{V_{(SUPPLY)} - V_{(OUTx)}}{I_{(OUTx_Tot)} \times 0.5} \tag{18}$$

where

- $V_{(SUPPLY)}$ = 12 V (typical)
- $I_{(OUTx_Tot)}$ = 100 mA (maximum)

The calculated result for $R_{(RESx)}$ resistor value including $R_{(RES1)}$, $R_{(RES2)}$ and $R_{(RES3)}$ is 152 Ω when $V_{(OUTx)}$ is typical 2 × 2.2 V = 4.4 V.

STEP 5: Design the threshold voltage of SUPPLY to enable the LED open-circuit and single-LED short-circuit diagnostics, and calculate voltage divider resistor value for **R1** and **R2** on DIAGEN pin.

The maximum forward voltage of LED-string is 2 × 2.5 V = 5 V. To avoid the open-circuit fault reported in low-dropout operation conditions, additional headroom between SUPPLY and OUTx needs to be considered. The TPS92633-Q1 device must disable open-circuit detection when the supply voltage is below LED-string maximum forward voltage plus $V_{(OPEN_th_rising)}$ and $V_{(CS_REG)}$. The voltage divider resistor, R1 and R2 value can be calculated by Equation 19.

$$R_1 = \left(\frac{V_{(OPEN_th_rising)} + V_{(CS_REG)} + V_{(OUTx)}}{V_{IL(DIAGEN)}} - 1 \right) \times R_2 \tag{19}$$

where

- $V_{(OPEN_th_rising)}$ = 210 mV (maximum)
- $V_{(CS_REG)}$ = 160 mV (maximum)
- $V_{IL(DIAGEN)}$ = 1.045 V (minimum)
- R_2 = 10 kΩ (recommended)

The calculated result for R1 is 41.2 kΩ when $V_{(OUTx)}$ maximum voltage is 5 V and $V_{(CS_REG)}$ is 160 mV maximum.

8.2.2.3 Application Curves

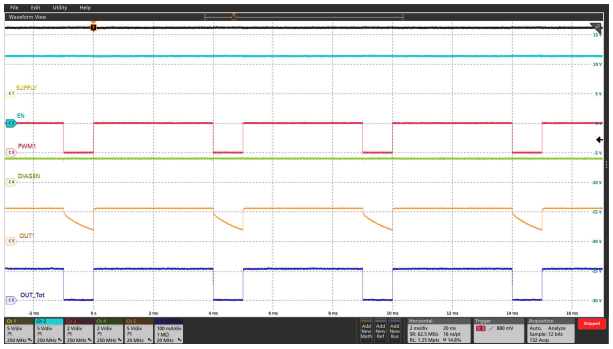

Ch1 = $V_{(SUPPLY)}$ Ch2 = $V_{(EN)}$ Ch3 = $V_{(PWM1)}$
Ch4 = $V_{(DIAGEN)}$ Ch5 = $V_{(OUT1)}$ Ch6 = $I_{(OUT_Tot)}$

Figure 8-5. PWM Dimming 80% Dutycycle at 200 Hz

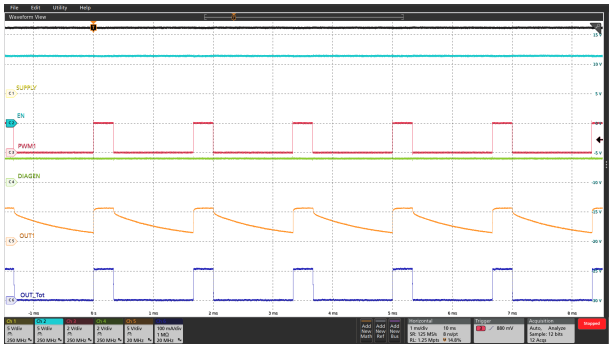

Ch1 = $V_{(SUPPLY)}$ Ch2 = $V_{(EN)}$ Ch3 = $V_{(PWM1)}$
Ch4 = $V_{(DIAGEN)}$ Ch5 = $V_{(OUT1)}$ Ch6 = $I_{(OUT_Tot)}$

Figure 8-6. PWM Dimming 20% Dutycycle at 600 Hz

Copyright © 2021 Texas Instruments Incorporated

9 Power Supply Recommendations

The TPS92633-Q1 is designed to operate from an automobile electrical power system within the range specified in Power Supply. The $V_{(SUPPLY)}$ input must be protected from reverse voltage and load dump condition over 40 V. The impedance of the input supply rail must be low enough that the input current transient does not cause drop below LED string required forward voltage. If the input supply is connected with long wires, additional bulk capacitance may be required in addition to normal input capacitor.

Copyright © 2021 Texas Instruments Incorporated

10 Layout

10.1 Layout Guidelines

Thermal dissipation is the primary consideration for TPS92633-Q1 layout.

- TI recommends large thermal dissipation area in both top and bottom layers of PCB. The copper pouring area in same layer with TPS92633-Q1 footprint should directly cover the thermal pad land of the device with wide connection as much as possible. The copper pouring in opposite PCB layer or inner layers should be connected to thermal pad directly through multiple thermal vias.
- TI recommends to place $R_{(RESx)}$ resistors away from the TPS92633-Q1 device with more than 20-mm distance because $R_{(RESx)}$ resistors are dissipating some amount of the power as well as the TPS92633-Q1. It is better to place two heat source components apart to reduce the thermal accumulation concentrated at small PCB area. The large copper pouring area is also required surrounding the $R_{(RESx)}$ resistors for helping thermal dissipating.

The noise immunity is the secondary consideration for TPS92633-Q1 layout.

- TI recommends to place the noise decoupling capacitors for SUPPLY, ICTRL and IREF pins as close as possible to the pins.
- TI recommends to place the $R_{(SNSx)}$ resistor as close as possible to the INx pins with the shortest PCB track to SUPPLY pin.

10.2 Layout Example

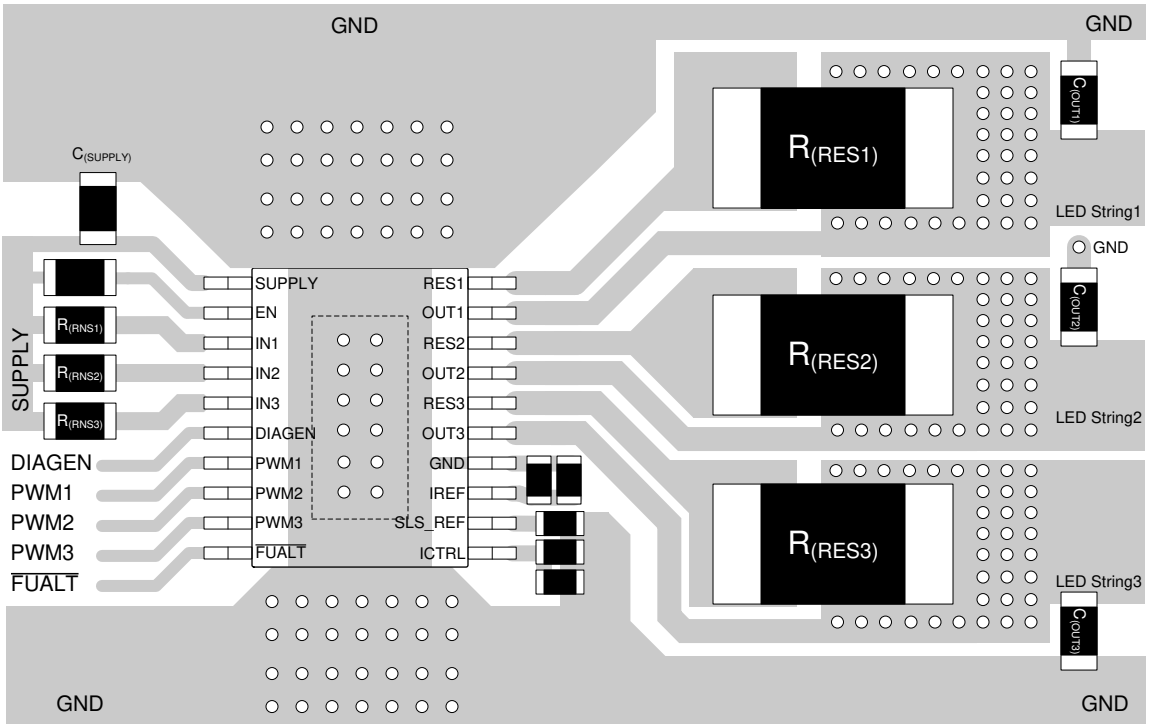

Figure 10-1. TPS92633-Q1 Example Layout Diagram

Copyright © 2021 Texas Instruments Incorporated

11 Device and Documentation Support

11.1 Receiving Notification of Documentation Updates

To receive notification of documentation updates, navigate to the device product folder on ti.com. Click on *Subscribe to updates* to register and receive a weekly digest of any product information that has changed. For change details, review the revision history included in any revised document.

11.2 Support Resources

TI E2E™ support forums are an engineer's go-to source for fast, verified answers and design help — straight from the experts. Search existing answers or ask your own question to get the quick design help you need.

Linked content is provided "AS IS" by the respective contributors. They do not constitute TI specifications and do not necessarily reflect TI's views; see TI's Terms of Use.

11.3 Trademarks

PowerPAD™ is a trademark of TI.
TI E2E™ is a trademark of Texas Instruments.
All trademarks are the property of their respective owners.

11.4 Electrostatic Discharge Caution

This integrated circuit can be damaged by ESD. Texas Instruments recommends that all integrated circuits be handled with appropriate precautions. Failure to observe proper handling and installation procedures can cause damage.

ESD damage can range from subtle performance degradation to complete device failure. Precision integrated circuits may be more susceptible to damage because very small parametric changes could cause the device not to meet its published specifications.

11.5 Glossary

TI Glossary	This glossary lists and explains terms, acronyms, and definitions.

12 Mechanical, Packaging, and Orderable Information

The following pages include mechanical, packaging, and orderable information. This information is the most current data available for the designated devices. This data is subject to change without notice and revision of this document. For browser-based versions of this data sheet, refer to the left-hand navigation.

Copyright © 2021 Texas Instruments Incorporated

PACKAGING INFORMATION

Orderable part number	Status (1)	Material type (2)	Package | Pins	Package qty | Carrier	RoHS (3)	Lead finish/ Ball material (4)	MSL rating/ Peak reflow (5)	Op temp (°C)	Part marking (6)
TPS92633QPWPRQ1	Active	Production	HTSSOP (PWP) | 20	2000 | LARGE T&R	Yes	NIPDAU	Level-3-260C-168 HR	-40 to 125	92633Q
TPS92633QPWPRQ1.A	Active	Production	HTSSOP (PWP) | 20	2000 | LARGE T&R	Yes	NIPDAU	Level-3-260C-168 HR	-40 to 125	92633Q

(1) **Status:** For more details on status, see our product life cycle.

(2) **Material type:** When designated, preproduction parts are prototypes/experimental devices, and are not yet approved or released for full production. Testing and final process, including without limitation quality assurance, reliability performance testing, and/or process qualification, may not yet be complete, and this item is subject to further changes or possible discontinuation. If available for ordering, purchases will be subject to an additional waiver at checkout, and are intended for early internal evaluation purposes only. These items are sold without warranties of any kind.

(3) **RoHS values:** Yes, No, RoHS Exempt. See the TI RoHS Statement for additional information and value definition.

(4) **Lead finish/Ball material:** Parts may have multiple material finish options. Finish options are separated by a vertical ruled line. Lead finish/Ball material values may wrap to two lines if the finish value exceeds the maximum column width.

(5) **MSL rating/Peak reflow:** The moisture sensitivity level ratings and peak solder (reflow) temperatures. In the event that a part has multiple moisture sensitivity ratings, only the lowest level per JEDEC standards is shown. Refer to the shipping label for the actual reflow temperature that will be used to mount the part to the printed circuit board.

(6) **Part marking:** There may be an additional marking, which relates to the logo, the lot trace code information, or the environmental category of the part.

Multiple part markings will be inside parentheses. Only one part marking contained in parentheses and separated by a "~" will appear on a part. If a line is indented then it is a continuation of the previous line and the two combined represent the entire part marking for that device.

Important Information and Disclaimer: The information provided on this page represents TI's knowledge and belief as of the date that it is provided. TI bases its knowledge and belief on information provided by third parties, and makes no representation or warranty as to the accuracy of such information. Efforts are underway to better integrate information from third parties. TI has taken and continues to take reasonable steps to provide representative and accurate information but may not have conducted destructive testing or chemical analysis on incoming materials and chemicals. TI and TI suppliers consider certain information to be proprietary, and thus CAS numbers and other limited information may not be available for release.

In no event shall TI's liability arising out of such information exceed the total purchase price of the TI part(s) at issue in this document sold by TI to Customer on an annual basis.

OTHER QUALIFIED VERSIONS OF TPS92633-Q1 :

- Catalog : TPS92633

NOTE: Qualified Version Definitions:

- Catalog - TI's standard catalog product

TAPE AND REEL INFORMATION

REEL DIMENSIONS

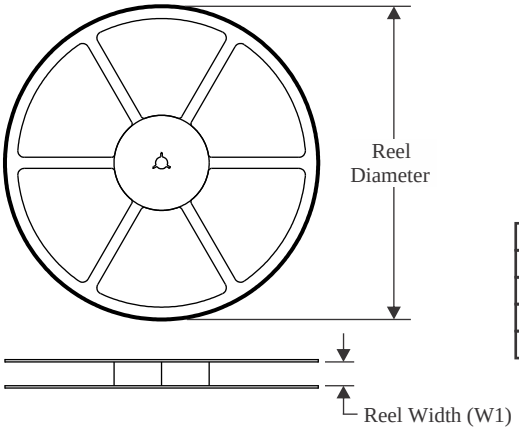

TAPE DIMENSIONS

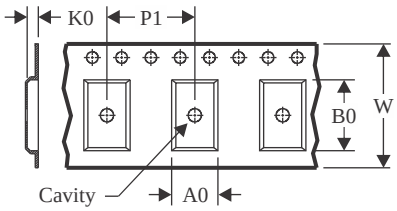

A0	Dimension designed to accommodate the component width
B0	Dimension designed to accommodate the component length
K0	Dimension designed to accommodate the component thickness
W	Overall width of the carrier tape
P1	Pitch between successive cavity centers

QUADRANT ASSIGNMENTS FOR PIN 1 ORIENTATION IN TAPE

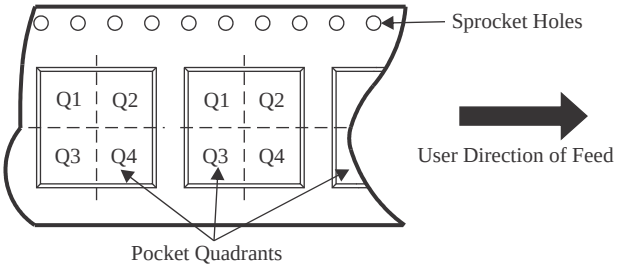

*All dimensions are nominal

Device	Package Type	Package Drawing	Pins	SPQ	Reel Diameter (mm)	Reel Width W1 (mm)	A0 (mm)	B0 (mm)	K0 (mm)	P1 (mm)	W (mm)	Pin1 Quadrant
TPS92633QPWPRQ1	HTSSOP	PWP	20	2000	330.0	16.4	6.95	7.0	1.4	8.0	16.0	Q1

TAPE AND REEL BOX DIMENSIONS

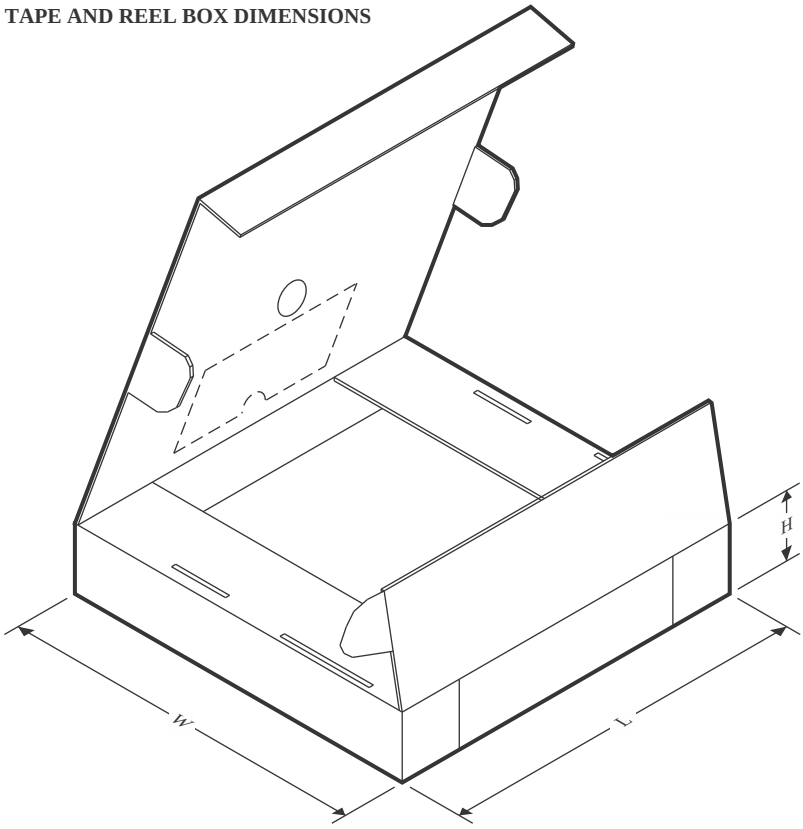

*All dimensions are nominal

Device	Package Type	Package Drawing	Pins	SPQ	Length (mm)	Width (mm)	Height (mm)
TPS92633QPWPRQ1	HTSSOP	PWP	20	2000	356.0	356.0	35.0

GENERIC PACKAGE VIEW

PWP 20

HTSSOP - 1.2 mm max height

6.5 x 4.4, 0.65 mm pitch

SMALL OUTLINE PACKAGE

This image is a representation of the package family, actual package may vary.
Refer to the product data sheet for package details.

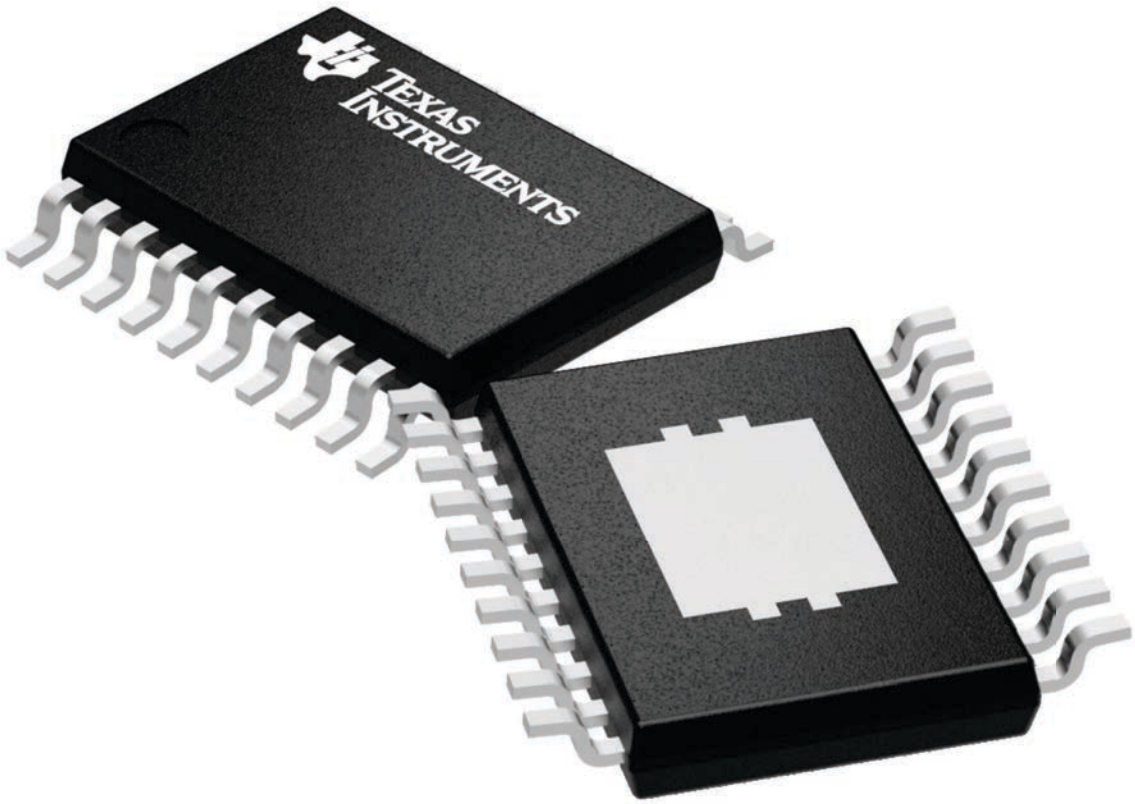

4224669/A

PWP (R-PDSO-G20) PowerPAD™ PLASTIC SMALL OUTLINE

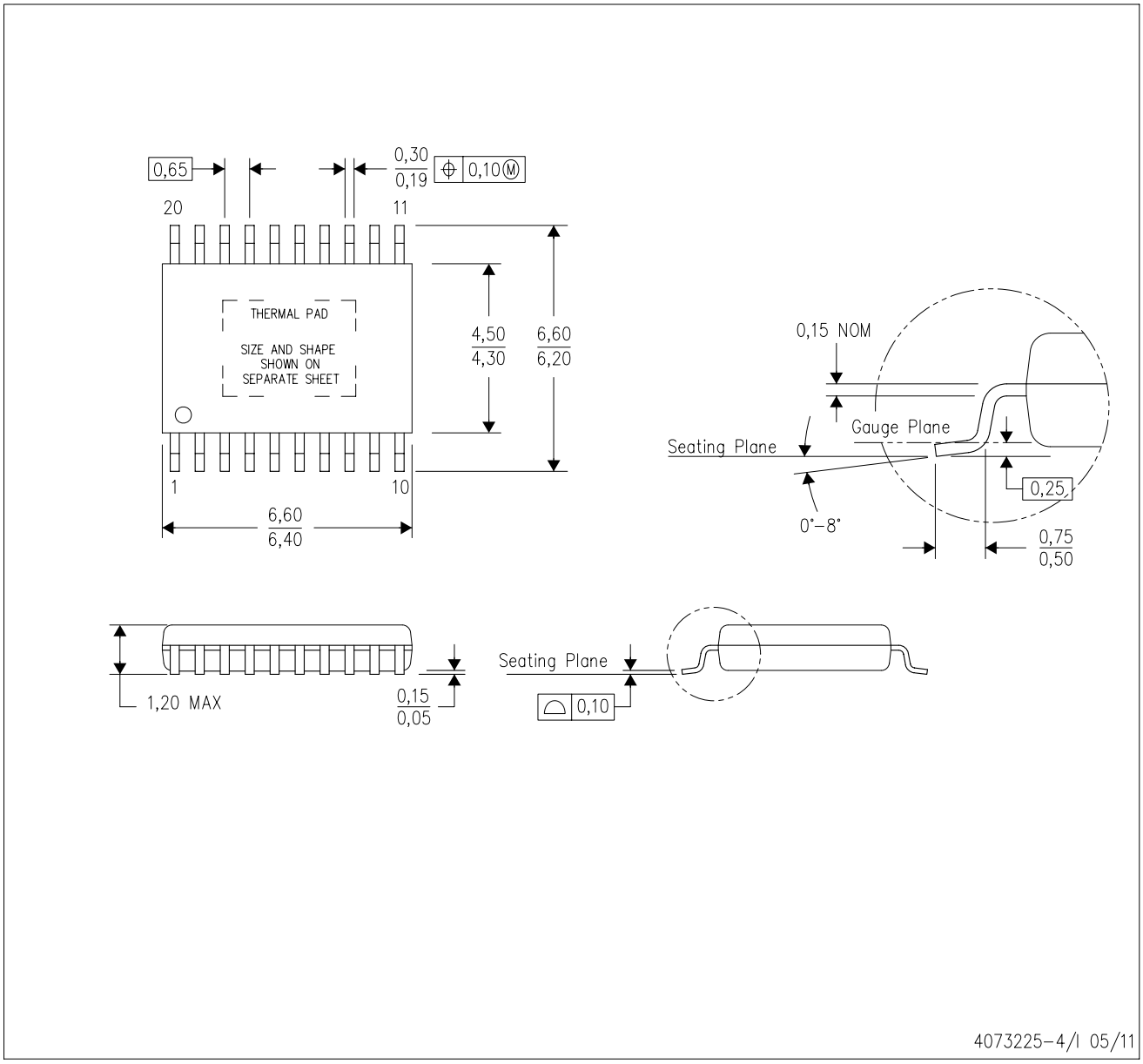

NOTES:
A. All linear dimensions are in millimeters.
B. This drawing is subject to change without notice.
C. Body dimensions do not include mold flash or protrusions. Mold flash and protrusion shall not exceed 0.15 per side.
D. This package is designed to be soldered to a thermal pad on the board. Refer to Technical Brief, PowerPad Thermally Enhanced Package, Texas Instruments Literature No. SLMA002 for information regarding recommended board layout. This document is available at www.ti.com <http://www.ti.com>.
E. See the additional figure in the Product Data Sheet for details regarding the exposed thermal pad features and dimensions.
E. Falls within JEDEC MO-153

PowerPAD is a trademark of Texas Instruments.

PWP (R-PDSO-G20) PowerPAD™ SMALL PLASTIC OUTLINE

THERMAL INFORMATION

This PowerPAD™ package incorporates an exposed thermal pad that is designed to be attached to a printed circuit board (PCB). The thermal pad must be soldered directly to the PCB. After soldering, the PCB can be used as a heatsink. In addition, through the use of thermal vias, the thermal pad can be attached directly to the appropriate copper plane shown in the electrical schematic for the device, or alternatively, can be attached to a special heatsink structure designed into the PCB. This design optimizes the heat transfer from the integrated circuit (IC).

For additional information on the PowerPAD package and how to take advantage of its heat dissipating abilities, refer to Technical Brief, PowerPAD Thermally Enhanced Package, Texas Instruments Literature No. SLMA002 and Application Brief, PowerPAD Made Easy, Texas Instruments Literature No. SLMA004. Both documents are available at www.ti.com.

The exposed thermal pad dimensions for this package are shown in the following illustration.

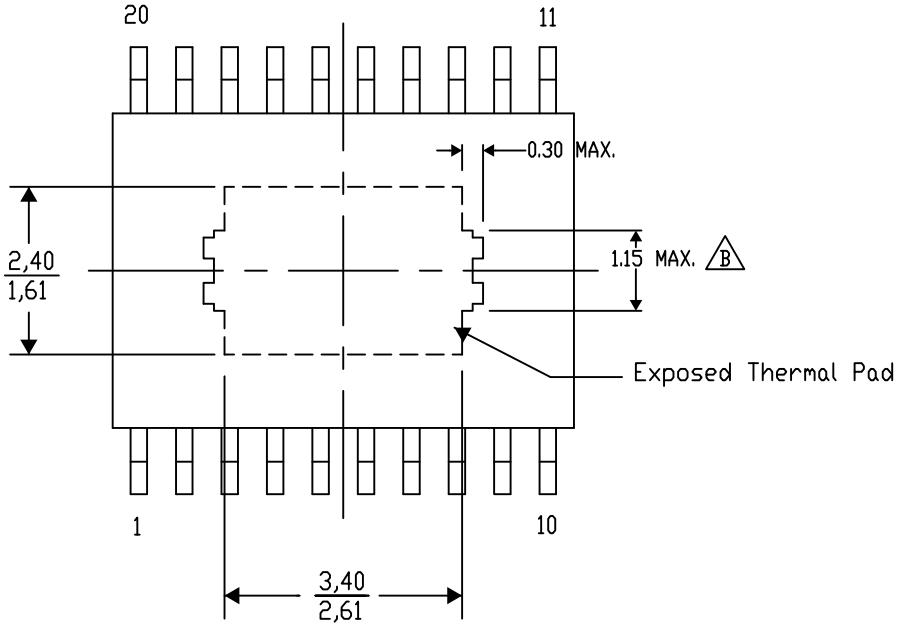

Top View

Exposed Thermal Pad Dimensions

4206332-15/AO 01/16

NOTE: A. All linear dimensions are in millimeters

B. Exposed tie strap features may not be present.

PowerPAD is a trademark of Texas Instruments

PWP (R–PDSO–G20) PowerPAD™ PLASTIC SMALL OUTLINE

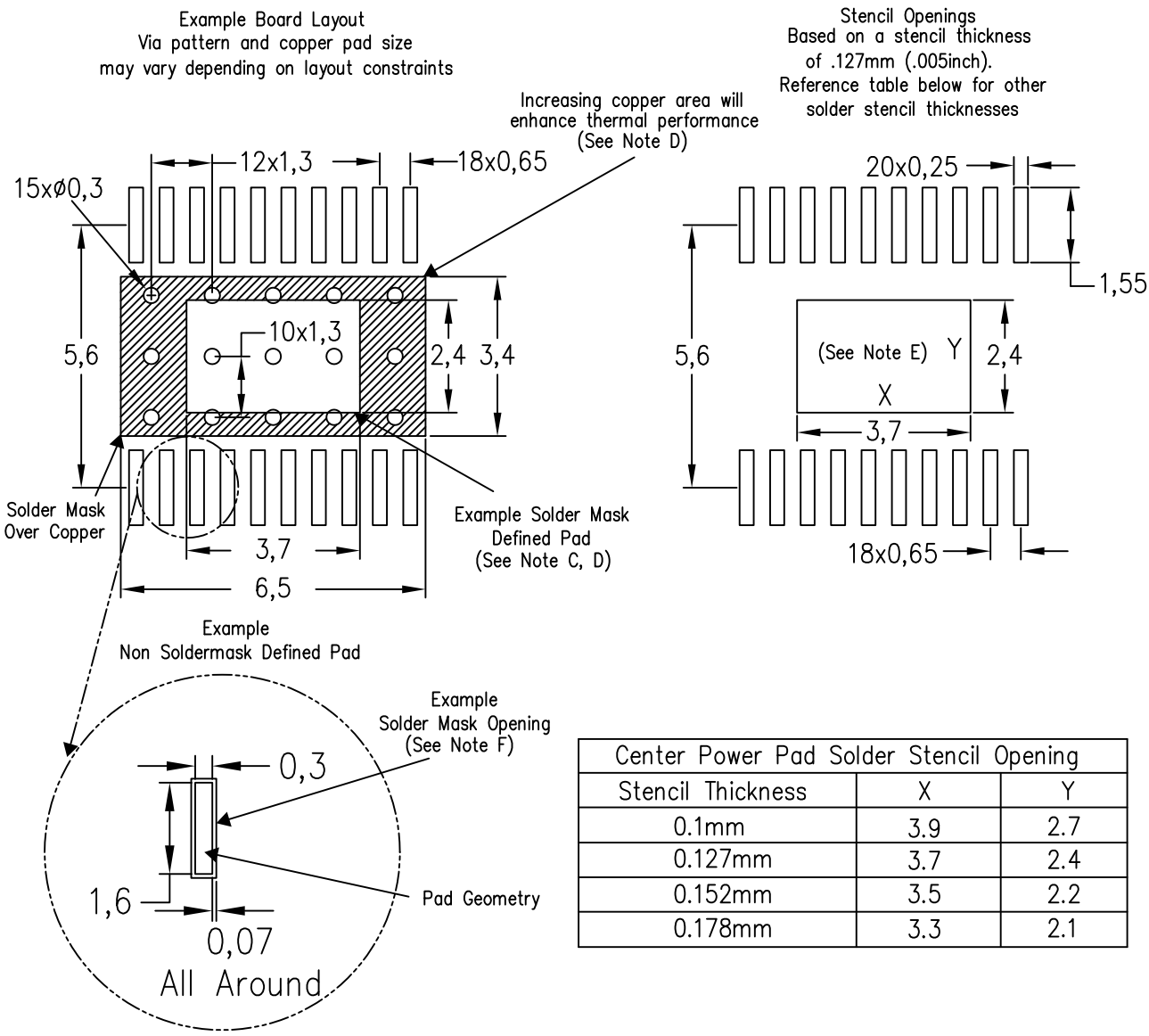

Center Power Pad Solder Stencil Opening		
Stencil Thickness	X	Y
0.1mm	3.9	2.7
0.127mm	3.7	2.4
0.152mm	3.5	2.2
0.178mm	3.3	2.1

4207609–8/W 09/15

NOTES:
A. All linear dimensions are in millimeters.
B. This drawing is subject to change without notice.
C. Customers should place a note on the circuit board fabrication drawing not to alter the center solder mask defined pad.
D. This package is designed to be soldered to a thermal pad on the board. Refer to Technical Brief, PowerPad Thermally Enhanced Package, Texas Instruments Literature No. SLMA002, SLMA004, and also the Product Data Sheets for specific thermal information, via requirements, and recommended board layout. These documents are available at www.ti.com <http://www.ti.com>. Publication IPC–7351 is recommended for alternate designs.
E. Laser cutting apertures with trapezoidal walls and also rounding corners will offer better paste release. Customers should contact their board assembly site for stencil design recommendations. Example stencil design based on a 50% volumetric metal load solder paste. Refer to IPC–7525 for other stencil recommendations.
F. Customers should contact their board fabrication site for solder mask tolerances between and around signal pads.

IMPORTANT NOTICE AND DISCLAIMER

TI PROVIDES TECHNICAL AND RELIABILITY DATA (INCLUDING DATA SHEETS), DESIGN RESOURCES (INCLUDING REFERENCE DESIGNS), APPLICATION OR OTHER DESIGN ADVICE, WEB TOOLS, SAFETY INFORMATION, AND OTHER RESOURCES “AS IS” AND WITH ALL FAULTS, AND DISCLAIMS ALL WARRANTIES, EXPRESS AND IMPLIED, INCLUDING WITHOUT LIMITATION ANY IMPLIED WARRANTIES OF MERCHANTABILITY, FITNESS FOR A PARTICULAR PURPOSE OR NON-INFRINGEMENT OF THIRD PARTY INTELLECTUAL PROPERTY RIGHTS.

These resources are intended for skilled developers designing with TI products. You are solely responsible for (1) selecting the appropriate TI products for your application, (2) designing, validating and testing your application, and (3) ensuring your application meets applicable standards, and any other safety, security, regulatory or other requirements.

These resources are subject to change without notice. TI grants you permission to use these resources only for development of an application that uses the TI products described in the resource. Other reproduction and display of these resources is prohibited. No license is granted to any other TI intellectual property right or to any third party intellectual property right. TI disclaims responsibility for, and you will fully indemnify TI and its representatives against, any claims, damages, costs, losses, and liabilities arising out of your use of these resources.

TI’s products are provided subject to TI’s Terms of Sale or other applicable terms available either on ti.com or provided in conjunction with such TI products. TI’s provision of these resources does not expand or otherwise alter TI’s applicable warranties or warranty disclaimers for TI products.

TI objects to and rejects any additional or different terms you may have proposed.

Mailing Address: Texas Instruments, Post Office Box 655303, Dallas, Texas 75265
Copyright © 2025, Texas Instruments Incorporated