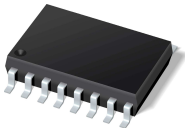

QUAD DIFFERENTIAL PECL RECEIVERS

FEATURES

- **Functional Replacements for the Agere BRF1A, BRF2A, BRS2A, and BRS2B**
- **Pin Equivalent to General Trade 26LS32**
- **High Input Impedance Approximately 8 kΩ**
- **4-ns Maximum Propagation Delay**
- **TB5R1 Provides 50-mV Hysteresis**
- **TB5R2 With -125-mV Threshold Offset for Preferred State Output**
- **-1.1-V to 7.1-V Common Mode Range**
- **Single 5-V 10% Supply**
- **Slew Rate Limited (1 ns min 80% to 20%)**
- **TB5R2 Output Defaults to Logic 1 When Inputs Left Open or Shorted to V_{CC} or GND**
- **ESD Protection HBM > 3 kV, CDM > 2 kV**
- **Operating Temperature Range: -40C to 85C**
- **Available in Gull-Wing SOIC (JEDEC MS-013, DW) and SOIC (D) Package**

APPLICATIONS

- **Digital Data or Clock Transmission Over Balanced Lines**

DESCRIPTION

These quad differential receivers accept digital data over balanced transmission lines. They translate differential input logic levels to TTL output logic levels.

The TB5R1 is a pin- and function-compatible replacement for the Agere systems BRF1A and BRF2A; it includes 3-kV HBM and 2-kV CDM ESD protection.

The TB5R2 is a pin- and function-compatible replacement for the Agere systems BRS2A and BRS2B and incorporates a 125-mV receiver input offset, preferred state output, 3-kV HBM and 2-kV CDM ESD protection. The TB5R2 preferred state feature places the high state when the inputs are open, shorted to ground, or shorted to the power supply.

The power-down loading characteristics of the receiver input circuit are approximately 8 kΩ relative to the power supplies; hence they do not load the transmission line when the circuit is powered down.

The packaging for these differential line receivers include a 16-pin gull wing SOIC (DW) and SOIC (D).

The enable inputs of this device include internal pullup resistors of approximately 40 kΩ that are connected to V_{CC} to ensure a logical high level input if the inputs are open circuited.

PIN ASSIGNMENTS

D PACKAGE
(TOP VIEW)

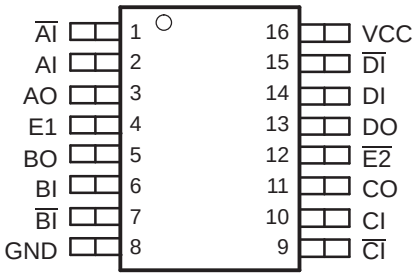

FUNCTIONAL BLOCK DIAGRAM

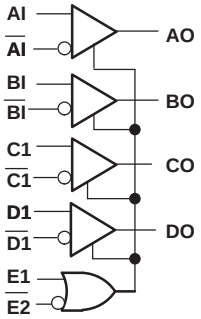

Enable Truth Table

E1	$\overline{E2}$	CONDITION
0	0	Active
1	0	Active
0	1	Disabled

Please be aware that an important notice concerning availability, standard warranty, and use in critical applications of Texas Instruments semiconductor products and disclaimers thereto appears at the end of this data sheet.

PRODUCTION DATA information is current as of publication date. Products conform to specifications per the terms of the Texas Instruments standard warranty. Production processing does not necessarily include testing of all parameters.

Copyright © 2003–2008, Texas Instruments Incorporated

Enable Truth Table (continued)

E1	$\overline{E2}$	CONDITION
1	1	Active

These devices have limited built-in ESD protection. The leads should be shorted together or the device placed in conductive foam during storage or handling to prevent electrostatic damage to the MOS gates.

ORDERING INFORMATION

PART NUMBER	PART MARKING	Package	LEAD FINISH	STATUS
TB5R1DW	TB5R1	Gull-Wing SOIC	NiPdAu	Production
TB5R1D	TB5R1	SOIC	NiPdAu	Production
TB5R2DW	TB5R2	Gull-Wing SOIC	NiPdAu	Production
TB5R2D	TB5R2	SOIC	NiPdAu	Production

POWER DISSIPATION RATINGS

PACKAGE	CIRCUIT BOARD MODEL	POWER RATING $T_A \leq 25°C$	THERMAL RESISTANCE, JUNCTION-TO-AMBIENT WITH NO AIR FLOW	DERATING FACTOR(1) $T_A \geq 25°C$	POWER RATING $T_A = 85°C$
D	Low-K(2)	763 mW	131.1°C/W	7.6 mW/°C	305 mW
	High-K(3)	1190 mW	84.1°C/W	11.9 mW/°C	475 mW
DW	Low-K(2)	831 mW	120.3°C/W	8.3 mW/°C	332 mW
	High-K(3)	1240 mW	80.8°C/W	12.4 mW/°C	494 mW

(1) This is the inverse of the junction-to-ambient thermal resistance when board-mounted with no air flow.
(2) In accordance with the low-K thermal metric definitions of EIA/JESD51-3.
(3) In accordance with the high-K thermal metric definitions of EIA/JESD51-7.

THERMAL CHARACTERISTICs

PARAMETER		PACKAGE	VALUE	UNIT
θ_{JB}	Junction-to-Board Thermal Resistance	D	47.5	°C/W
		DW	53.7	°C/W
θ_{JC}	Junction-to-Case Thermal Resistance	D	44.2	°C/W
		DW	47.1	°C/W

ABSOLUTE MAXIMUM RATINGS

over operating free-air temperature range unless otherwise noted(1)

			UNIT
Supply voltage, V_{CC}			0 V to 6 V
Magnitude of differential bus (input) voltage, $\lvert V_{AI} - V\rvert$, $\lvert V_{BI} - V\rvert$, $\lvert V_{CI} - V\rvert$, $\lvert V_{DI} - V\rvert$			8.4 V
ESD	Human Body Model(2)	All pins	3 kV
	Charged-Device Model(3)	All pins	2 kV
Continuous power dissipation			See Dissipation Rating Table
Storage temperature, T_{stg}			–65°C to 150°C

(1) Stresses beyond those listed under„ absolute maximum ratings” may cause permanent damage to the device. These are stress ratings only, and functional operation of the device at these or any other conditions beyond those indicated under„ recommended operating conditions” is not implied. Exposure to absolute-maximum-rated conditions for extended periods may affect device reliability.
(2) Tested in accordance with JEDEC Standard 22, Test Method A114-A.
(3) Tested in accordance with JEDEC Standard 22, Test Method C101.

Copyright © 2003–2008, Texas Instruments Incorporated

RECOMMENDED OPERATING CONDITIONS

	MIN	Nom	MAX	UNIT
Supply voltage, V_{CC}	4.5	5	5.5	V
Bus pin input voltage, V_{AI}, V, V_{BI}, V, V_{CI}, V, V_{DI}, V	–1.2 (1)		7.2	V
Magnitude of differential input voltage, $\|V_{AI}$ - V$\|$, $\|V_{BI}$ - V$\|$, $\|V_{CI}$ - V$\|$, $\|V_{DI}$ - V$\|$	0.1		6	V
Operating free-air temperature, T_A	-40		85	°C

(1) The algebraic convention, in which the least positive (most negative) limit is designated as minimum is used in this data sheet, unless otherwise noted.

DEVICE ELECTRICAL CHARACTERISTICS

over operating free-air temperature range unless otherwise noted

PARAMETER		TEST CONDITIONS	MIN	TYP	MAX	UNIT
I_{CC}	Supply current (1)	Outputs disabled			40	mA
		Outputs enabled			38	mA

(1) Current is dc power draw as measured through GND pin and does not include power delivered to load.

RECEIVER ELECTRICAL CHARACTERISTICS

over operating free-air temperature range unless otherwise noted

parameter		test conditions		min	typ	max	unit
V_{OL}	Output low voltage	V_{CC} = 4.5 V,	I_{OL} = 8 mA			0.4	V
V_{OH}	Output high voltage	V_{CC} = 4.5 V,	I_{OH} = -400 A	2.4			V
V_{IL}	Low level enable input voltage (1)	V_{CC} = 5.5 V				0.8	V
V_{IH}	High level enable input voltage (1)	V_{CC} = 5.5 V		2			V
V_{IK}	Enable input clamp voltage	V_{CC} = 4.5 V,	I_I = -5 mA			-1 (2)	V
V_{TH+}	Positive-going differential input threshold voltage (1), (V_{xI} - V)	x = A, B, C, or D	TB5R1			100	mV
			TB5R2 (3)			-50	mV
V_{TH-}	Negative-going differential input threshold voltage (1), (V_{xI} - V)	x = A, B, C, or D	TB5R1			-100 (2)	mV
			TB5R2 (3)			-200 (2)	mV
V_{HYST}	Differential input threshold voltage hysteresis, (V_{TH+} - $V_{TH_}$)	TB5R1			50		mV
I_{OZL}	Output off-state current, (High-Z)	V_{CC} = 5.5 V	V_O = 0.4 V			-20 (2)	A
I_{OZH}			V_O = 2.4 V			20	A
I_{OS}	Output short circuit current (4)	V_{CC} = 5.5 V				-100 (2)	mA
I_{IL}	Enable input low current	V_{CC} = 5.5 V,	V_{IN} = 0.4 V			-400 (2)	A
I_{IH}	Enable input high current	V_{CC} = 5.5 V	V_{IN} = 2.7 V			20	A
	Enable input reverse current		V_{IN} = 5.5 V			100	A
II_L	Differential input low current	V_{CC} = 5.5V,	V_{IN} = -1.2 V			-2 (2)	mA
I_{IH}	Differential input high current	V_{CC}= 5.5V,	V_{IN} = 7.2 V			1	mA
R_O	Output resistance				20		Ω

(1) The input levels and difference voltage provide no noise immunity and should be tested only in a static, noise-free environment.
(2) This parameter is listed using a magnitude and polarity/direction convention, rather than an algebraic convention, to match the original Agere data sheet.
(3) Outputs of unused receivers assume a logic 1 level when the inputs are left open. (It is recomended that all unused positive inputs be tied to the positive power supply. No external series resistor is required.)
(4) Test must be performed one lead at a time to prevent damage to the device.

Copyright © 2003–2008, Texas Instruments Incorporated

SWITCHING CHARACTERISTICS

over operating free-air temperature range unless otherwise noted

parameter		test conditions	min	typ	max	unit
t_{PLH}	Propagation delay time, low-to-high-level output	C_L = 0 pF(1), See Figure 2 and Figure 4		2.5	4	ns
t_{PHL}	Propagation delay time, high-to-low-level output			2.5	4	
t_{PLH}	Propagation delay time, low-to-high-level output	C_L = 15 pF, See Figure 2 and Figure 4		3	5	ns
t_{PHL}	Propagation delay time, high-to-low-level output			3	5	
t_{PHZ}	Output disable time, high-level-to-high-impedance output(2)	C_L = 5 pF, See Figure 3 and Figure 5		4.1	12	ns
t_{PLZ}	Output disable time, low-level-to-high-impedance output(2)			2.8	12	ns
t_{skew1}	Pulse width distortion, $\lvert t_{PHL} - t_{PLH} \rvert$	C_L = 10 pF, See Figure 2 and Figure 4			0.7	ns
		C_L = 150 pF, See Figure 2 and Figure 4			4	ns
$\Delta t_{skew1p-p}$	Part-to-part output waveform skew(3)	C_L = 10 pF, T_A = 75C, See Figure 2 and Figure 4		0.8	1.4	ns
		C_L = 10 pF, T_A = -40C to 85C, See Figure 2 and Figure 4			1.5	ns
Δt_{skew}	Same part output waveform skew(3)	C_L = 10 pF, See Figure 2 and Figure 4			0.3	ns
t_{PZH}	Output enable time, high-impedance-to-high-level output(2)	C_L = 10 pF, See Figure 3 and Figure 4		5	12	ns
t_{PZL}	Output enable time, high-impedance-to-low-level output(2)			4	12	ns
t_{TLH}	Rise time (20%-80%)	C_L = 10 pF, See Figure 2 and Figure 4	1		3.5	ns
t_{THL}	Fall time (80%-20%)		1		3.5	ns

(1) The propagation delay values with a 0 pF load are based on design and simulation.
(2) See Table 1.
(3) Output waveform skews are when devices operate with the same supply voltage at the same temperature and have the same packages and the same test circuits.

TYPICAL CHARACTERISTICS

TYPICAL PROPAGATION DELAY vs LOAD CAPACITANCE

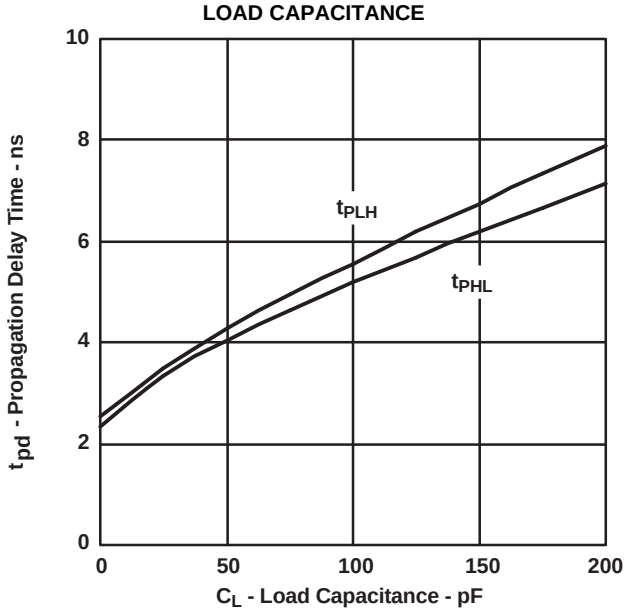

A. NOTE: This graph is included as an aid to the system designers. Total circuit delay varies with load capacitance. The total delay is the sum of the delay due to external capacitance and the intrinsic delay of the device. Intrinsic delay is listed in the table above as the 0 pF load condition. The incremental increase in delay between the 0 pF load condition and the actual total load capacitance represents the extrinsic, or external delay contributed by the load.

Figure 1. Typical Propagation Delay

Copyright © 2003–2008, Texas Instruments Incorporated

TYPICAL CHARACTERISTICS (continued)

vs
Load Capacitance at 25C

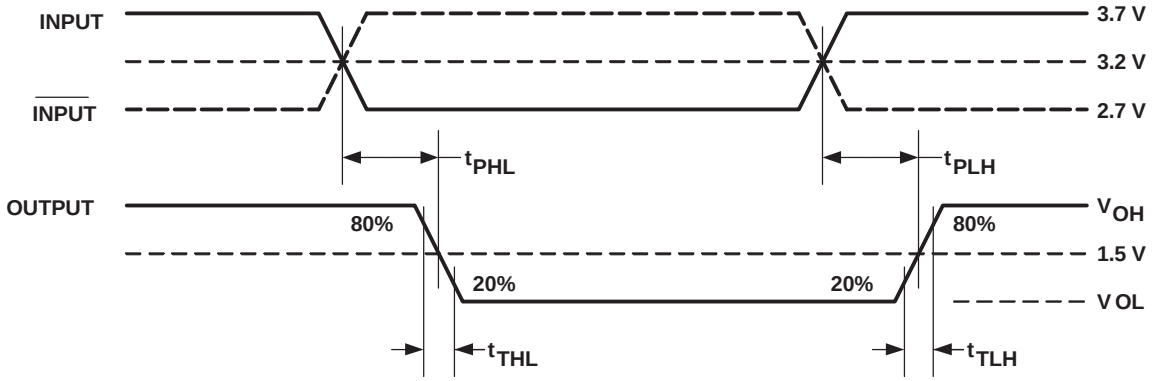

Figure 2. Receiver Propagation Delay Times

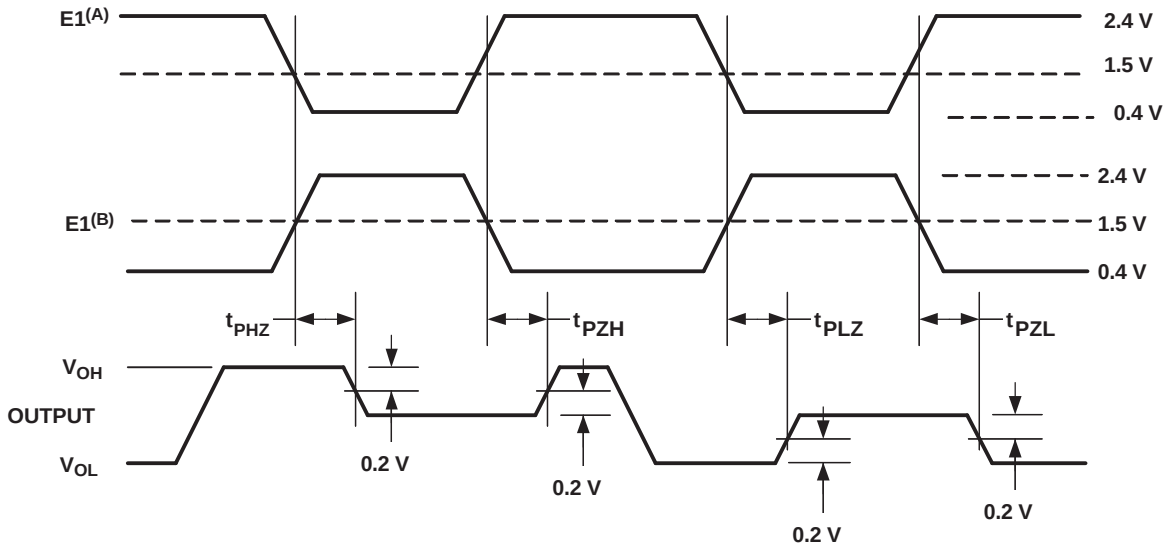

A. $\overline{E2}$ = 1 while E1 changes states.

B. E1 = 0 while $\overline{E2}$ changes states.

Figure 3. Receiver Enable and Disable Timing

Parametric values specified under the Electrical Characteristics and Timing Characteristics sections for the data transmission driver devices are measured with the following output load circuits.

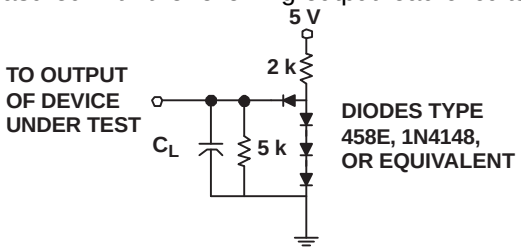

C_L includes test-fixture and probe capacitance.

Figure 4. Receiver Propagation Delay Time and Enable Time (t_{PZH}, t_{PZL}) Test Circuit

TYPICAL CHARACTERISTICS (continued)

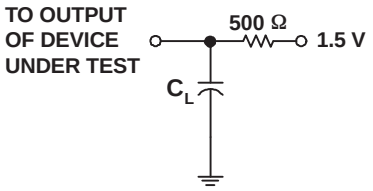

C_L includes test-fixture and probe capacitance.

Figure 5. Receiver Disable Time (t_{PHZ}, t_{PLZ}) Test Circuit

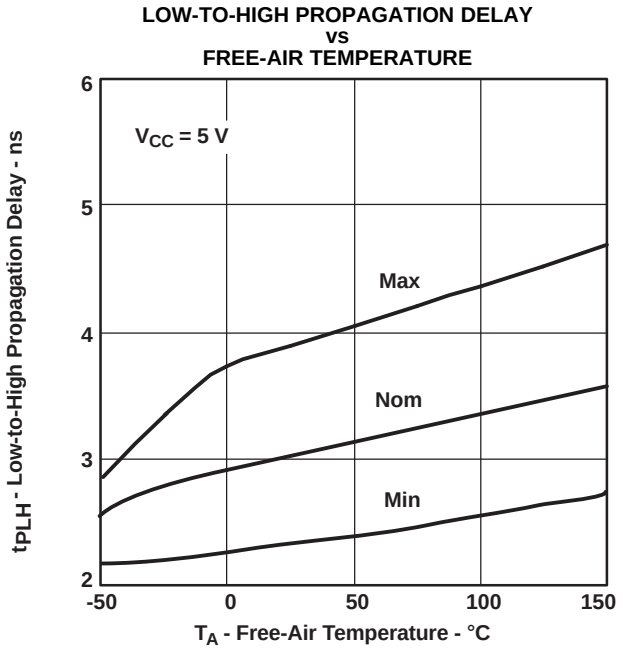

Figure 6.

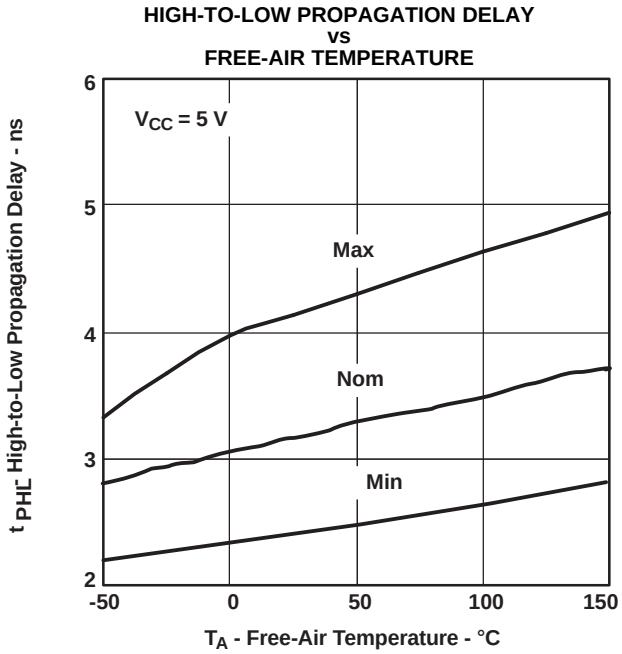

Figure 7.

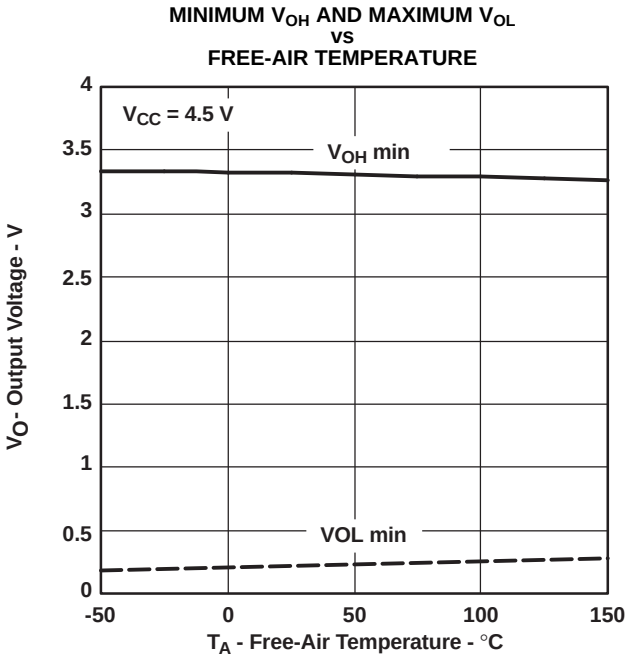

Figure 8.

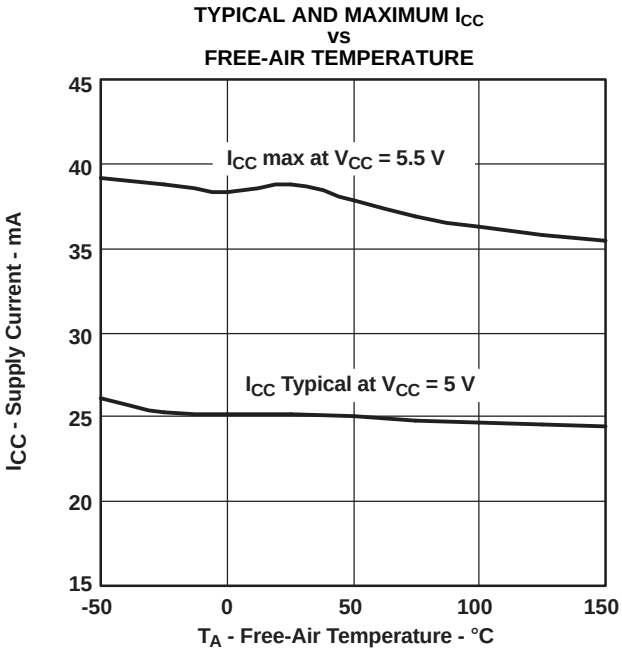

Figure 9.

Copyright © 2003–2008, Texas Instruments Incorporated

APPLICATION INFORMATION

Power Dissipation

The power dissipation rating, often listed as the package dissipation rating, is a function of the ambient temperature, T_A, and the airflow around the device. This rating correlates with the device's maximum junction temperature, sometimes listed in the absolute maximum ratings tables. The maximum junction temperature accounts for the processes and materials used to fabricate and package the device, in addition to the desired life expectancy.

There are two common approaches to estimating the internal die junction temperature, T_J. In both of these methods, the device internal power dissipation P_D needs to be calculated This is done by totaling the supply power(s) to arrive at the system power dissipation:

$$\sum (V_{Sn} \times I_{Sn}) \tag{1}$$

and then subtracting the total power dissipation of the external load(s):

$$\sum (V_{Ln} \times I_{Ln}) \tag{2}$$

The first T_J calculation uses the power dissipation and ambient temperature, along with one parameter: θ_{JA}, the junction-to-ambient thermal resistance, in degrees Celsius per watt.

The product of P_D and θ_{JA} is the junction temperature rise above the ambient temperature. Therefore:

$$T_J = T_A + (P_D \times \theta_{JA}) \tag{3}$$

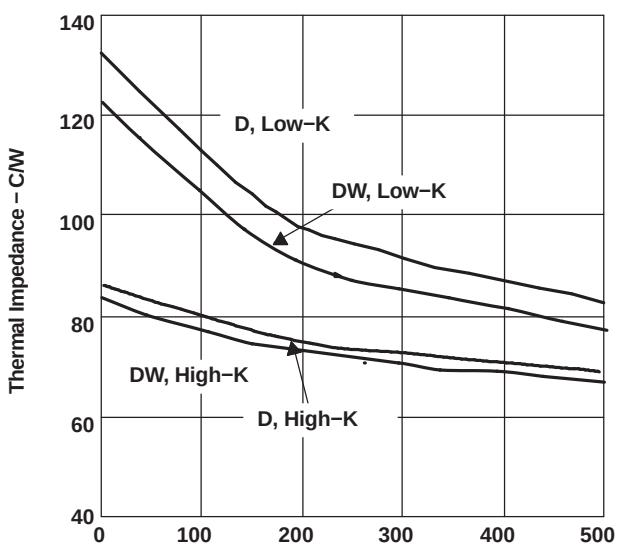

Figure 10. Thermal Impedance vs Air Flow

Note that θ_{JA} is highly dependent on the PCB on which the device is mounted and on the airflow over the device and PCB. JEDEC/EIA has defined standardized test conditions for measuring θ_{JA}. Two commonly used conditions are the low-K and the high-K boards, covered by EIA/JESD51-3 and EIA/JESD51-7 respectively. Figure 10 shows the low-K and high-K values of θ_{JA} versus air flow for this device and its package options.

The standardized θ_{JA} values may not accurately represent the conditions under which the device is used. This can be due to adjacent devices acting as heat sources or heat sinks, to nonuniform airflow, or to the system PCB having significantly different thermal characteristics than the standardized test PCBs. The second method of system thermal analysis is more accurate. This calculation uses the power dissipation and ambient temperature, along with two device and two system-level parameters:

- θ_{JC}, the junction-to-case thermal resistance, in degrees Celsius per watt
- θ_{JB}, the junction-to-board thermal resistance, in degrees Celsius per watt
- θ_{CA}, the case-to-ambient thermal resistance, in degrees Celsius per watt
- θ_{BA}, the board-to-ambient thermal resistance, in degrees Celsius per watt.

In this analysis, there are two parallel paths, one through the case (package) to the ambient, and another through the device to the PCB to the ambient. The system-level junction-to-ambient thermal impedance, $\theta_{JA(S)}$, is the equivalent parallel impedance of the two parallel paths:

$$T_J = T_A + \left(P_D \times \theta_{JA(S)}\right) \tag{4}$$

where

$$\theta_{JA(S)} = \frac{\left[\left(\theta_{JC} + \theta_{CA}\right) \times \left(\theta_{JB} + \theta_{BA}\right)\right]}{\left(\theta_{JC} + \theta_{CA} + \theta_{JB} + \theta_{BA}\right)} \tag{5}$$

The device parameters θ_{JC} and θ_{JB} account for the internal structure of the device. The system-level parameters θ_{CA} and θ_{BA} take into account details of the PCB construction, adjacent electrical and mechanical components, and the environmental conditions including airflow. Finite element (FE), finite difference (FD), or computational fluid dynamics (CFD) programs can determine θ_{CA} and θ_{BA}. Details on using these programs are beyond the scope of this data sheet, but are available from the software manufacturers.

Copyright © 2003–2008, Texas Instruments Incorporated

PACKAGING INFORMATION

Orderable part number	Status (1)	Material type (2)	Package | Pins	Package qty | Carrier	RoHS (3)	Lead finish/ Ball material (4)	MSL rating/ Peak reflow (5)	Op temp (°C)	Part marking (6)
TB5R1D	Last Time Buy	Production	SOIC (D) | 16	40 | TUBE	Yes	NIPDAU	Level-2-250C-1YEAR/ Level-1-220C-UNLIM	-40 to 85	TB5R1
TB5R1D.B	Last Time Buy	Production	SOIC (D) | 16	40 | TUBE	Yes	NIPDAU	Level-2-250C-1YEAR/ Level-1-220C-UNLIM	-40 to 85	TB5R1
TB5R1DW	Last Time Buy	Production	SOIC (DW) | 16	40 | TUBE	Yes	NIPDAU	Level-2-250C-1YEAR/ Level-1-220C-UNLIM	-40 to 85	TB5R1
TB5R1DW.B	Last Time Buy	Production	SOIC (DW) | 16	40 | TUBE	Yes	NIPDAU	Level-2-250C-1YEAR/ Level-1-220C-UNLIM	-40 to 85	TB5R1
TB5R2D	Active	Production	SOIC (D) | 16	40 | TUBE	Yes	NIPDAU	Level-2-250C-1YEAR/ Level-1-220C-UNLIM	-40 to 85	TB5R2
TB5R2D.B	Active	Production	SOIC (D) | 16	40 | TUBE	Yes	NIPDAU	Level-2-250C-1YEAR/ Level-1-220C-UNLIM	-40 to 85	TB5R2
TB5R2D1G4.B	Active	Production	SOIC (D) | 16	40 | TUBE	Yes	NIPDAU	Level-2-250C-1YEAR/ Level-1-220C-UNLIM	-40 to 85	TB5R2
TB5R2DWR	Active	Production	SOIC (DW) | 16	2000 | LARGE T&R	Yes	NIPDAU	Level-2-250C-1YEAR/ Level-1-220C-UNLIM	-40 to 85	TB5R2
TB5R2DWR.B	Active	Production	SOIC (DW) | 16	2000 | LARGE T&R	Yes	NIPDAU	Level-2-250C-1YEAR/ Level-1-220C-UNLIM	-40 to 85	TB5R2

(1) **Status:** For more details on status, see our product life cycle.

(2) **Material type:** When designated, preproduction parts are prototypes/experimental devices, and are not yet approved or released for full production. Testing and final process, including without limitation quality assurance, reliability performance testing, and/or process qualification, may not yet be complete, and this item is subject to further changes or possible discontinuation. If available for ordering, purchases will be subject to an additional waiver at checkout, and are intended for early internal evaluation purposes only. These items are sold without warranties of any kind.

(3) **RoHS values:** Yes, No, RoHS Exempt. See the TI RoHS Statement for additional information and value definition.

(4) **Lead finish/Ball material:** Parts may have multiple material finish options. Finish options are separated by a vertical ruled line. Lead finish/Ball material values may wrap to two lines if the finish value exceeds the maximum column width.

(5) **MSL rating/Peak reflow:** The moisture sensitivity level ratings and peak solder (reflow) temperatures. In the event that a part has multiple moisture sensitivity ratings, only the lowest level per JEDEC standards is shown. Refer to the shipping label for the actual reflow temperature that will be used to mount the part to the printed circuit board.

(6) **Part marking:** There may be an additional marking, which relates to the logo, the lot trace code information, or the environmental category of the part.

Multiple part markings will be inside parentheses. Only one part marking contained in parentheses and separated by a "~" will appear on a part. If a line is indented then it is a continuation of the previous line and the two combined represent the entire part marking for that device.

Important Information and Disclaimer: The information provided on this page represents TI's knowledge and belief as of the date that it is provided. TI bases its knowledge and belief on information provided by third parties, and makes no representation or warranty as to the accuracy of such information. Efforts are underway to better integrate information from third parties. TI has taken and continues to take reasonable steps to provide representative and accurate information but may not have conducted destructive testing or chemical analysis on incoming materials and chemicals. TI and TI suppliers consider certain information to be proprietary, and thus CAS numbers and other limited information may not be available for release.

In no event shall TI's liability arising out of such information exceed the total purchase price of the TI part(s) at issue in this document sold by TI to Customer on an annual basis.

TAPE AND REEL INFORMATION

REEL DIMENSIONS

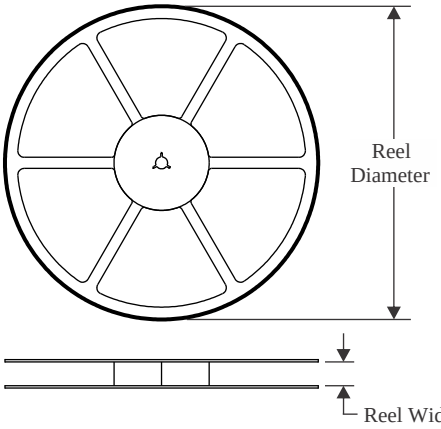

TAPE DIMENSIONS

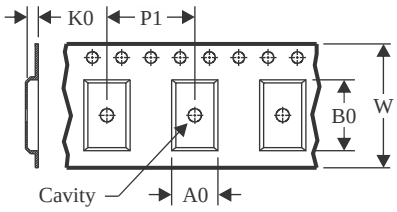

A0	Dimension designed to accommodate the component width
B0	Dimension designed to accommodate the component length
K0	Dimension designed to accommodate the component thickness
W	Overall width of the carrier tape
P1	Pitch between successive cavity centers

QUADRANT ASSIGNMENTS FOR PIN 1 ORIENTATION IN TAPE

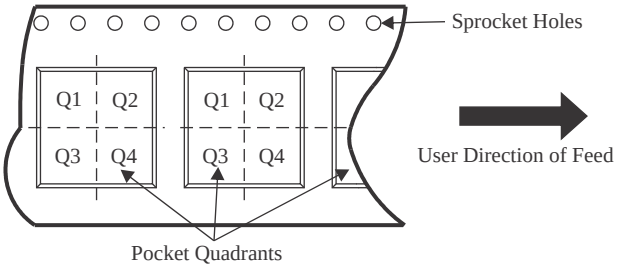

*All dimensions are nominal

Device	Package Type	Package Drawing	Pins	SPQ	Reel Diameter (mm)	Reel Width W1 (mm)	A0 (mm)	B0 (mm)	K0 (mm)	P1 (mm)	W (mm)	Pin1 Quadrant
TB5R2DWR	SOIC	DW	16	2000	330.0	16.4	10.75	10.7	2.7	12.0	16.0	Q1

TAPE AND REEL BOX DIMENSIONS

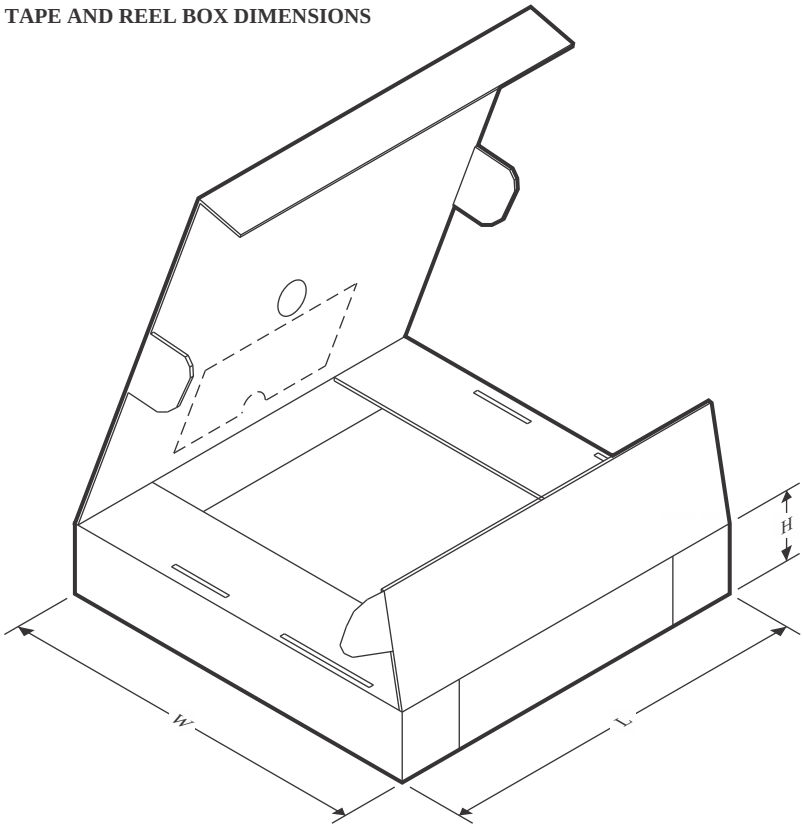

*All dimensions are nominal

Device	Package Type	Package Drawing	Pins	SPQ	Length (mm)	Width (mm)	Height (mm)
TB5R2DWR	SOIC	DW	16	2000	350.0	350.0	43.0

TUBE

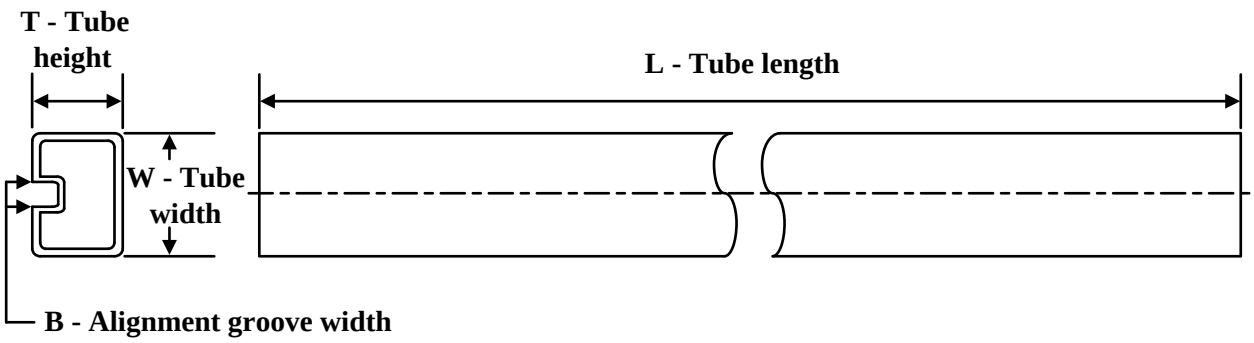

*All dimensions are nominal

Device	Package Name	Package Type	Pins	SPQ	L (mm)	W (mm)	T (µm)	B (mm)
TB5R1D	D	SOIC	16	40	505.46	6.76	3810	4
TB5R1D.B	D	SOIC	16	40	505.46	6.76	3810	4
TB5R1DW	DW	SOIC	16	40	506.98	12.7	4826	6.6
TB5R1DW.B	DW	SOIC	16	40	506.98	12.7	4826	6.6
TB5R2D	D	SOIC	16	40	505.46	6.76	3810	4
TB5R2D.B	D	SOIC	16	40	505.46	6.76	3810	4
TB5R2D1G4.B	D	SOIC	16	40	505.46	6.76	3810	4

D (R–PDSO–G16) PLASTIC SMALL OUTLINE

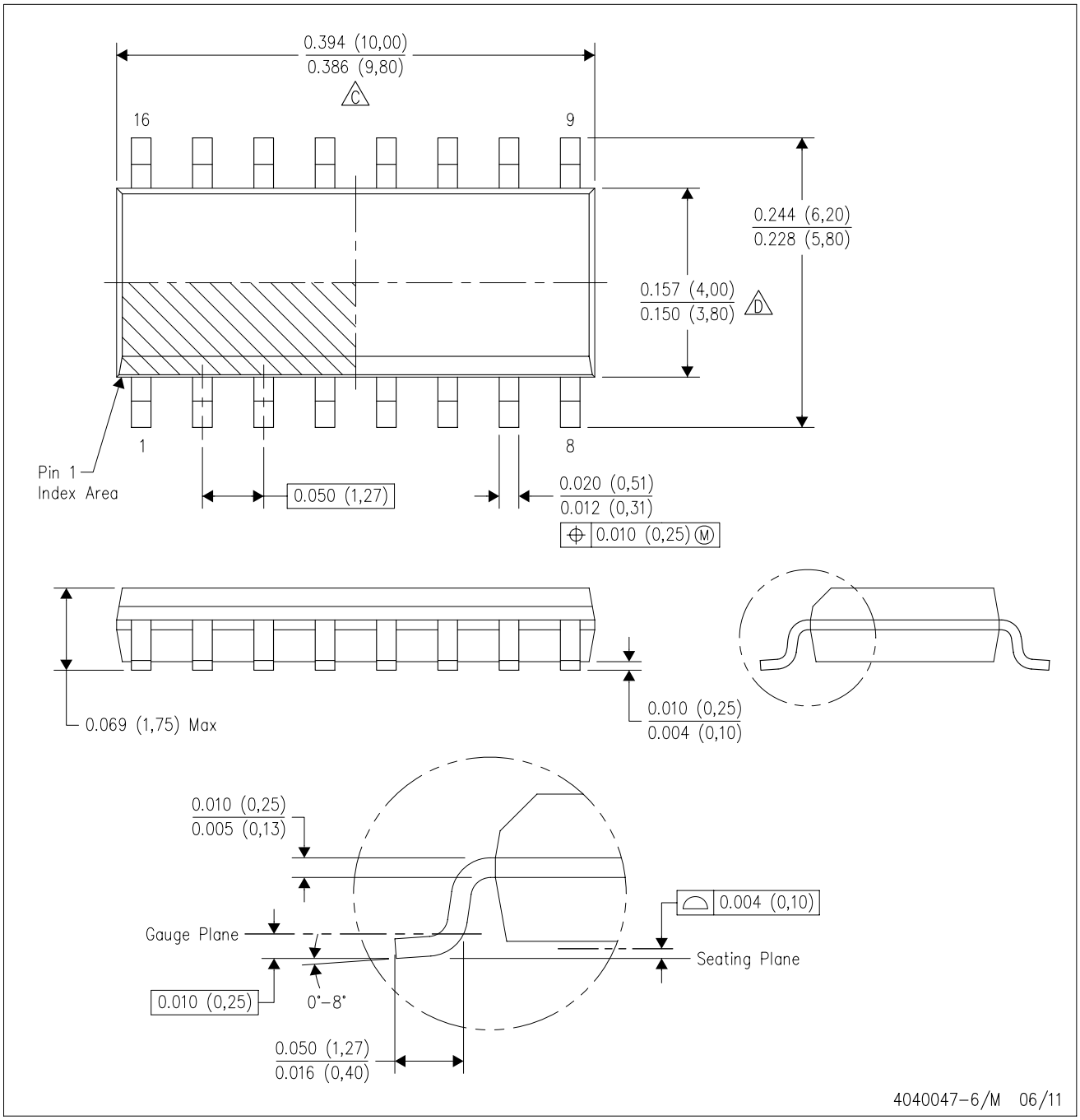

NOTES:
A. All linear dimensions are in inches (millimeters).
B. This drawing is subject to change without notice.
C. Body length does not include mold flash, protrusions, or gate burrs. Mold flash, protrusions, or gate burrs shall not exceed 0.006 (0,15) each side.
D. Body width does not include interlead flash. Interlead flash shall not exceed 0.017 (0,43) each side.
E. Reference JEDEC MS–012 variation AC.

GENERIC PACKAGE VIEW

DW 16

SOIC - 2.65 mm max height

7.5 x 10.3, 1.27 mm pitch

SMALL OUTLINE INTEGRATED CIRCUIT

This image is a representation of the package family, actual package may vary.
Refer to the product data sheet for package details.

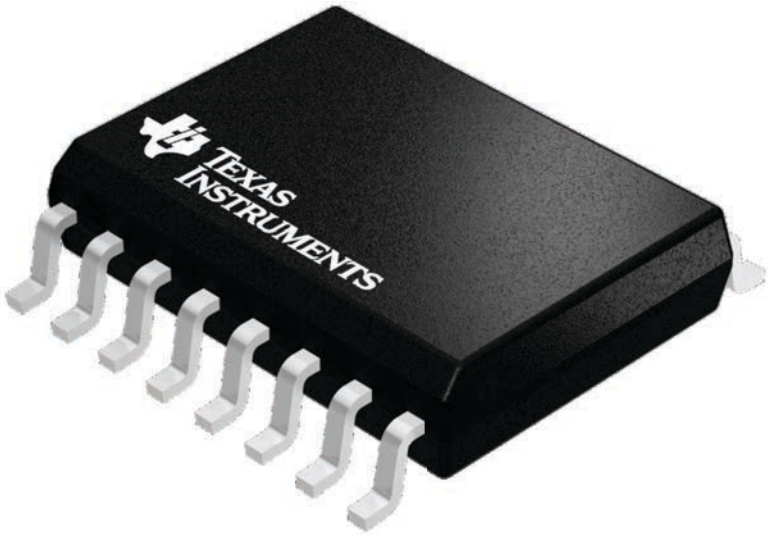

4224780/A

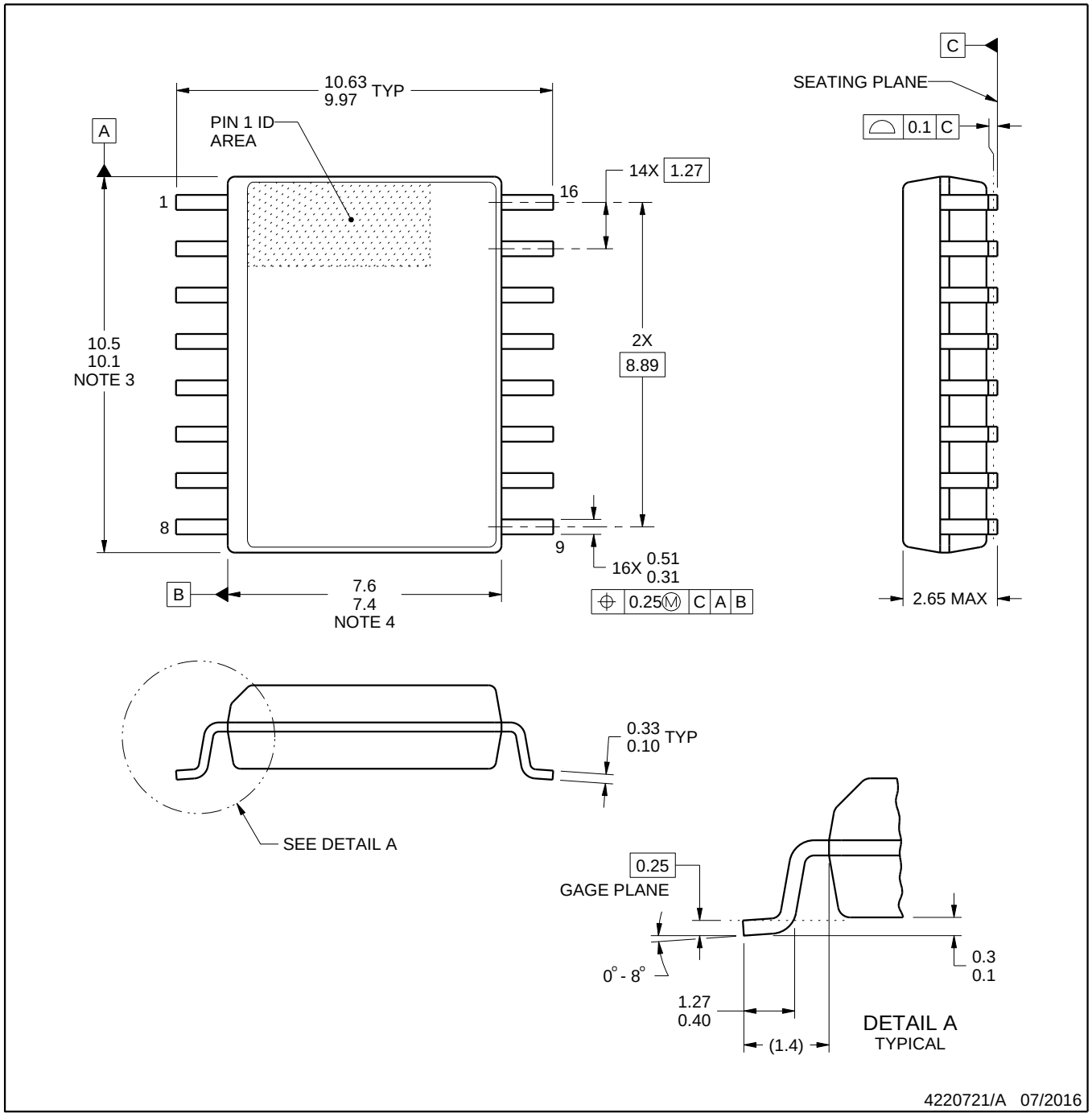

NOTES:

1. All linear dimensions are in millimeters. Dimensions in parenthesis are for reference only. Dimensioning and tolerancing per ASME Y14.5M.
2. This drawing is subject to change without notice.
3. This dimension does not include mold flash, protrusions, or gate burrs. Mold flash, protrusions, or gate burrs shall not exceed 0.15 mm, per side.
4. This dimension does not include interlead flash. Interlead flash shall not exceed 0.25 mm, per side.
5. Reference JEDEC registration MS-013.

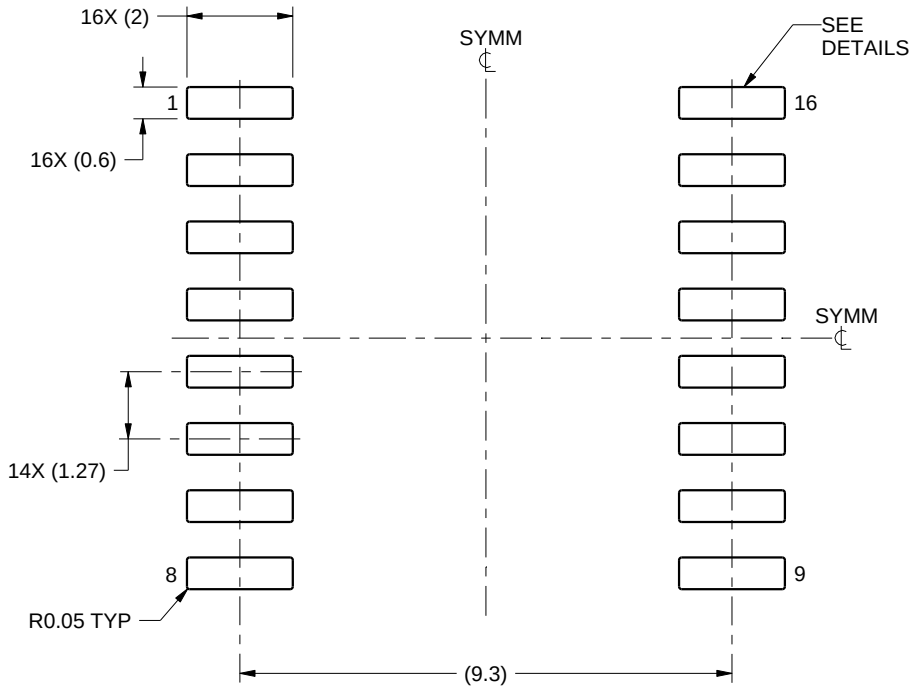

LAND PATTERN EXAMPLE
SCALE:7X

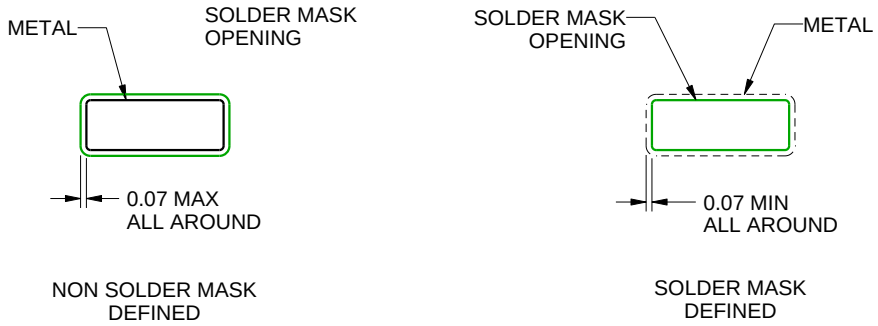

SOLDER MASK DETAILS

4220721/A 07/2016

NOTES: (continued)

6. Publication IPC-7351 may have alternate designs.
7. Solder mask tolerances between and around signal pads can vary based on board fabrication site.

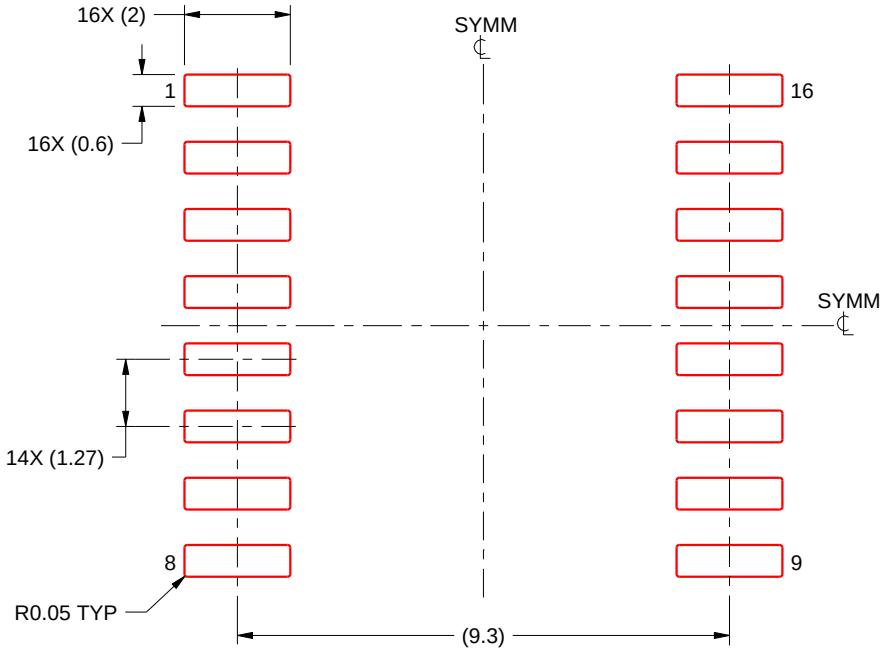

SOLDER PASTE EXAMPLE
BASED ON 0.125 mm THICK STENCIL
SCALE:7X

4220721/A 07/2016

NOTES: (continued)

8. Laser cutting apertures with trapezoidal walls and rounded corners may offer better paste release. IPC-7525 may have alternate design recommendations.
9. Board assembly site may have different recommendations for stencil design.

IMPORTANT NOTICE AND DISCLAIMER

TI PROVIDES TECHNICAL AND RELIABILITY DATA (INCLUDING DATA SHEETS), DESIGN RESOURCES (INCLUDING REFERENCE DESIGNS), APPLICATION OR OTHER DESIGN ADVICE, WEB TOOLS, SAFETY INFORMATION, AND OTHER RESOURCES “AS IS” AND WITH ALL FAULTS, AND DISCLAIMS ALL WARRANTIES, EXPRESS AND IMPLIED, INCLUDING WITHOUT LIMITATION ANY IMPLIED WARRANTIES OF MERCHANTABILITY, FITNESS FOR A PARTICULAR PURPOSE OR NON-INFRINGEMENT OF THIRD PARTY INTELLECTUAL PROPERTY RIGHTS.

These resources are intended for skilled developers designing with TI products. You are solely responsible for (1) selecting the appropriate TI products for your application, (2) designing, validating and testing your application, and (3) ensuring your application meets applicable standards, and any other safety, security, regulatory or other requirements.

These resources are subject to change without notice. TI grants you permission to use these resources only for development of an application that uses the TI products described in the resource. Other reproduction and display of these resources is prohibited. No license is granted to any other TI intellectual property right or to any third party intellectual property right. TI disclaims responsibility for, and you will fully indemnify TI and its representatives against, any claims, damages, costs, losses, and liabilities arising out of your use of these resources.

TI’s products are provided subject to TI’s Terms of Sale or other applicable terms available either on ti.com or provided in conjunction with such TI products. TI’s provision of these resources does not expand or otherwise alter TI’s applicable warranties or warranty disclaimers for TI products.

TI objects to and rejects any additional or different terms you may have proposed.

Mailing Address: Texas Instruments, Post Office Box 655303, Dallas, Texas 75265
Copyright © 2025, Texas Instruments Incorporated