AM26LV31 Low-Voltage High-Speed Quadruple Differential Line Drivers

1 Features

- Switching rates up to 32MHz
- Operate from a single 3.3V supply
- Propagation delay time: 8ns typical
- Pulse skew time: 500ps typical
- High output-drive current: ±30 mA
- Controlled rise and fall times: 3ns typical
- Differential output voltage with 100Ω load: 1.5V typical
- Ultra-low power dissipation
  - DC, 0.3mW maximum
  - 32MHz All channels (no load), 385mW typical
- Accept 5V logic inputs with 3.3V supply
- Low-voltage pin-to-pin compatible replacement for AM26C31, AM26LS31, MB571
- High output impedance in power-off condition
- Driver output short-protection circuit
- Package options include plastic small-outline (D, NS) packages

2 Applications

- Motor control: brushless DC and brushed DC
- Field transmitters: temperature sensors and pressure sensors
- Temperature sensors or controllers using Modbus

3 Description

The AM26LV31C and AM26LV31I are BiCMOS quadruple differential line drivers with 3-state outputs. They are designed to be similar to TIA/EIA-422-B and ITU Recommendation V.11 drivers with reduced supply-voltage range.

The devices are optimized for balanced-bus transmission at switching rates up to 32MHz. The outputs have very high current capability for driving balanced lines such as twisted-pair transmission lines and provide a high impedance in the power-off condition. The enable function is common to all four drivers and offers the choice of active-high or active-low enable inputs. The AM26LV31C and AM26LV31I are designed using Texas Instruments proprietary LinIMPACT-C60™ technology, facilitating ultra-low power consumption without sacrificing speed. These devices offer optimum performance when used with the AM26LV32 quadruple line receivers.

The AM26LV31C is characterized for operation from 0°C to 70°C. The AM26LV31I is characterized for operation from –45°C to 85°.C

Package Information

PART NUMBER	PACKAGE(1)	PACKAGE SIZE(2)
AM26LV31C	SOIC (D) 16	9.9mm x 6mm
AM26LV31I	SOIC (D) 16	9.9mm x 6mm
	SO (NS) 16	10.2mm x 7.8mm

(1) For more information, see Section 11.
(2) The package size (length × width) is a nominal value and includes pins, where applicable.

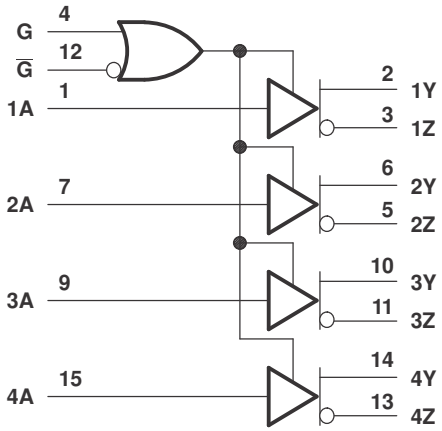

Logic Diagram (Positive Logic)

An IMPORTANT NOTICE at the end of this data sheet addresses availability, warranty, changes, use in safety-critical applications, intellectual property matters and other important disclaimers. PRODUCTION DATA.

Table of Contents

1 Features....1
2 Applications....1
3 Description....1
4 Pin Configuration and Functions....3
5 Specifications....4
5.1 Absolute Maximum Ratings....4
5.2 ESD Ratings....4
5.3 Recommended Operating Conditions....4
5.4 Thermal Information....4
5.5 Electrical Characteristics....5
5.6 Switching Characteristics....5
5.7 Typical Characteristics....6
6 Parameter Measurement Information....7
7 Detailed Description....10
7.1 Overview....10
7.2 Functional Block Diagram....10
7.3 Feature Description....10
7.4 Device Functional Modes....11
8 Application and Implementation....12
8.1 Application Information....12
8.2 Typical Application....12
8.3 Power Supply Recommendations....13
8.4 Layout....13
9 Device and Documentation Support....15
9.1 Device Support....15
9.2 Receiving Notification of Documentation Updates....15
9.3 Support Resources....15
9.4 Trademarks....15
9.5 Electrostatic Discharge Caution....15
9.6 Glossary....15
10 Revision History....15
11 Mechanical, Packaging, and Orderable Information....16

Copyright © 2024 Texas Instruments Incorporated

4 Pin Configuration and Functions

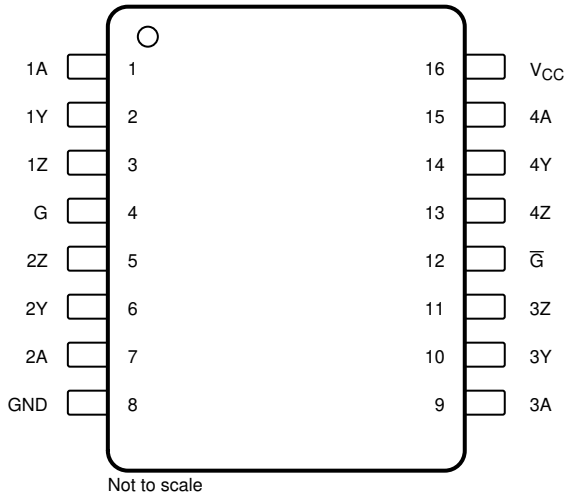

Figure 4-1. D or NS Package, SOIC 16 Pins (Top View)

Table 4-1. Pin Functions

PIN		I/O	DESCRIPTION
NO.	NAME		
1	1A	I	Driver 1 input
2	1Y	O	Driver 1 output
3	1Z	O	Driver 1 inverted output
4	G	I	Active high enable
5	2Z	O	Driver 2 inverted output
6	2Y	O	Driver 2 output
7	2A	I	Driver 2 input
8	GND	—	Ground pin
9	3A	I	Driver 3 input
10	3Y	O	Driver 3 output
11	3Z	O	Driver 3 inverted output
12	$\overline{G}$	I	Active low enable
13	4Z	O	Driver 4 inverted output
14	4Y	O	Driver 4 output
15	4A	I	Driver 4 input
16	V_{CC}	—	Power pin

Copyright © 2024 Texas Instruments Incorporated

5 Specifications

5.1 Absolute Maximum Ratings

over operating free-air temperature range (unless otherwise noted)[1]

	MIN	MAX	UNIT
Supply voltage range, V_{CC} [2]	–0.3	6	V
Input voltage range, V_I	–0.3	6	V
Output voltage range, V_O	–0.3	6	V
Storage temperature, T_{stg}	–65	150	°C

(1) Stresses beyond those listed under *Absolute Maximum Ratings* may cause permanent damage to the device. These are stress ratings only, which do not imply functional operation of the device at these or any other conditions beyond those indicated under *Recommended Operating Conditions*. Exposure to absolute-maximum-rated conditions for extended periods may affect device reliability.
(2) All voltage values are with respect to GND.

5.2 ESD Ratings

			VALUE	UNIT
$V_{(ESD)}$	Electrostatic discharge	Human-body model (HBM), per ANSI/ESDA/JEDEC JS-001[1]	±3000	V
		Charged-device model (CDM), per JEDEC specification JESD22-C101[2]	±250	

(1) JEDEC document JEP155 states that 500-V HBM allows safe manufacturing with a standard ESD control process. .
(2) JEDEC document JEP157 states that 250-V CDM allows safe manufacturing with a standard ESD control process.

5.3 Recommended Operating Conditions

			MIN	NOM	MAX	UNIT
V_{CC}	Supply voltage		3	3.3	3.6	V
V_{IH}	High-level input voltage		2			V
V_{IL}	Low-level input voltage				0.8	V
I_{OH}	High-level output current				–30	mA
I_{OL}	Low-level output current				30	mA
T_A	Operating free-air temperature	AM26LV31C	0		70	°C
		AM26LV31I	–45		85	°C

5.4 Thermal Information

THERMAL METRIC[1]		D (SOIC) 16 PINS	NS (SO) 16 PINS	UNIT
$R_{\theta JA}$	Junction-to-ambient thermal resistance	84.6	88.5	°C/W
$R_{\theta JC(top)}$	Junction-to-case (top) thermal resistance	43.5	46.2	°C/W
$R_{\theta JB}$	Junction-to-board thermal resistance	43.2	50.7	°C/W
ψ_{JT}	Junction-to-top characterization parameter	10.4	13.5	°C/W
ψ_{JB}	Junction-to-board characterization parameter	42.8	50.3	°C/W
$R_{\theta JC(bot)}$	Junction-to-case (bottom) thermal resistance	n/a	n/a	°C/W

(1) For more information about traditional and new thermal metrics, see the Semiconductor and IC Package Thermal Metrics application report.

Copyright © 2024 Texas Instruments Incorporated

5.5 Electrical Characteristics

over recommended operating supply-voltage and free-air temperature ranges (unless otherwise noted)

PARAMETER		TEST CONDITIONS		MIN	TYP[1]	MAX	UNIT
V_{IK}	Input clamp voltage	I_I = 18mA				–1.5	V
V_{OH}	High-level output voltage	V_{IH} = 2V,	I_{OH} = –12mA	1.85	2.3		V
V_{OL}	Low-level output voltage	V_{IL} = 0.8V,	I_{OH} = 12mA		0.8	1.05	V
$\|V_{OD}\|$	Differential output voltage[2]	R_L = 100Ω		0.95	1.5		V
V_{OC}	Common-mode output voltage			1.3	1.55	1.9	V
$\Delta\|V_{OC}\|$	Change in magnitude of common-mode output voltage[2]					±0.2	V
I_O	Output current with power off	V_O = –0.25V or 6V,	V_{CC} = 0			±100	μA
I_{OZ}	Off-state (high-impedance state) output current	V_O = –0.25V or 6V,	G = 0.8V or $\overline{G}$ = 2V			±100	μA
I_H	High-level input current	V_{CC} = 0 or 3V,	V_I = 5.5V			10	μA
I_L	Low-level input current	V_{CC} = 3.6V,	V_I = 0			–10	μA
I_{OS}	Short-circuit output current	V_{CC} = 3.6V,	V_O = 0			–200	mA
I_{CC}	Supply current (all drivers)	V_I = V_{CC} or GND,	No load			100	μA
C_{pd}	Power-dissipation capacitance (all drivers)[3]	No load			160		pF

(1) All typical values are at V_{CC} = 3.3V, T_A = 25°C.
(2) $\Delta|V_{OD}|$ and $\Delta|V_{OC}|$ are the changes in magnitude of V_{OD} and V_{OC}, respectively, that occur when the input is changed from a high level to a low level.
(3) C_{pd} determines the no-load dynamic current consumption. $I_S = C_{pd} \times V_{CC} \times f + I_{CC}$

5.6 Switching Characteristics

PARAMETER		TEST CONDITIONS		MIN	TYP[1]	MAX	UNIT
t_{PLH}	Propagation delay time, low- to high-level output	See Figure 6-2		4	8	20	ns
t_{PHL}	Propagation delay time, high- to low-level output			4	8	20	ns
t_t	Transition time (t_r or t_f)				3		ns
SR	Slew rate, single-ended output voltage	See Note [2] and Figure 6-2			0.3	1	V/ns
t_{PZH}	Output-enable time to high level	See Figure 6-3			10	20	ns
t_{PZL}	Output-enable time to low level	See Figure 6-4			10	20	ns
t_{PHZ}	Output-disable time from high level	See Figure 6-3			10	20	ns
t_{PLZ}	Output-disable time from low level	See Figure 6-4			10	20	ns
$t_{sk(p)}$	Pulse skew	f = 32MHz,	See Note [3]		0.5	3	ns
$t_{sk(o)}$	Skew limit	f = 32MHz				3	ns
$t_{sk(lim)}$	Skew limit (device to device)	f = 32 MHz,	See Note [4]			3	ns

(1) All typical values are at V_{CC} = 3.3V, T_A = 25°C
(2) Slew rate is defined by Equation 1
(3) Pulse skew is defined as the $|t_{PLH} - t_{PHL}|$ of each channel of the same device.
(4) Skew limit (device to device) is the maximum difference in propagation delay times between any two channels of any two devices.

$$SR = \frac{90\%\,(V_{OH} - V_{OL}) - 10\%\,(V_{OH} - V_{OL})}{t_f}$$, the differential slew rate of V_{CC} is 2 x SR. (1)

5.7 Typical Characteristics

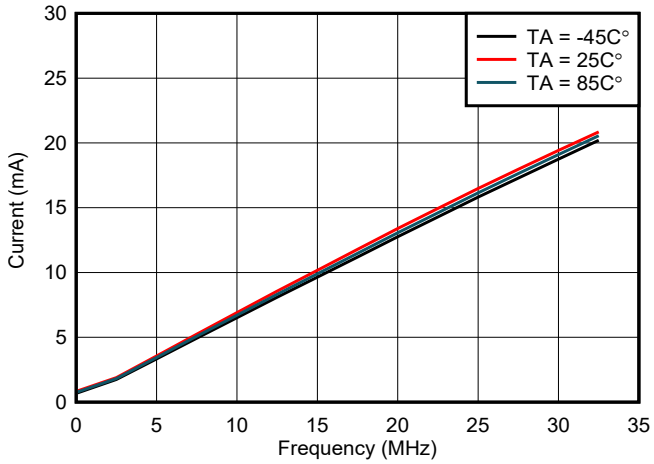

Figure 5-1. Current vs Frequency

Copyright © 2024 Texas Instruments Incorporated

6 Parameter Measurement Information

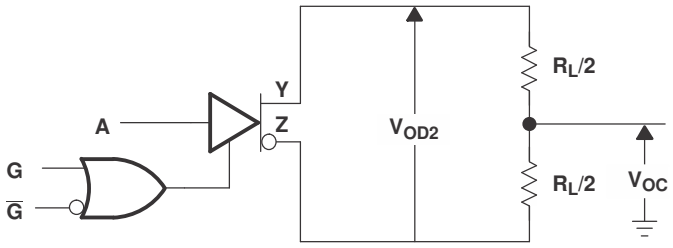

Figure 6-1. Differential and Common-Mode Output Voltages

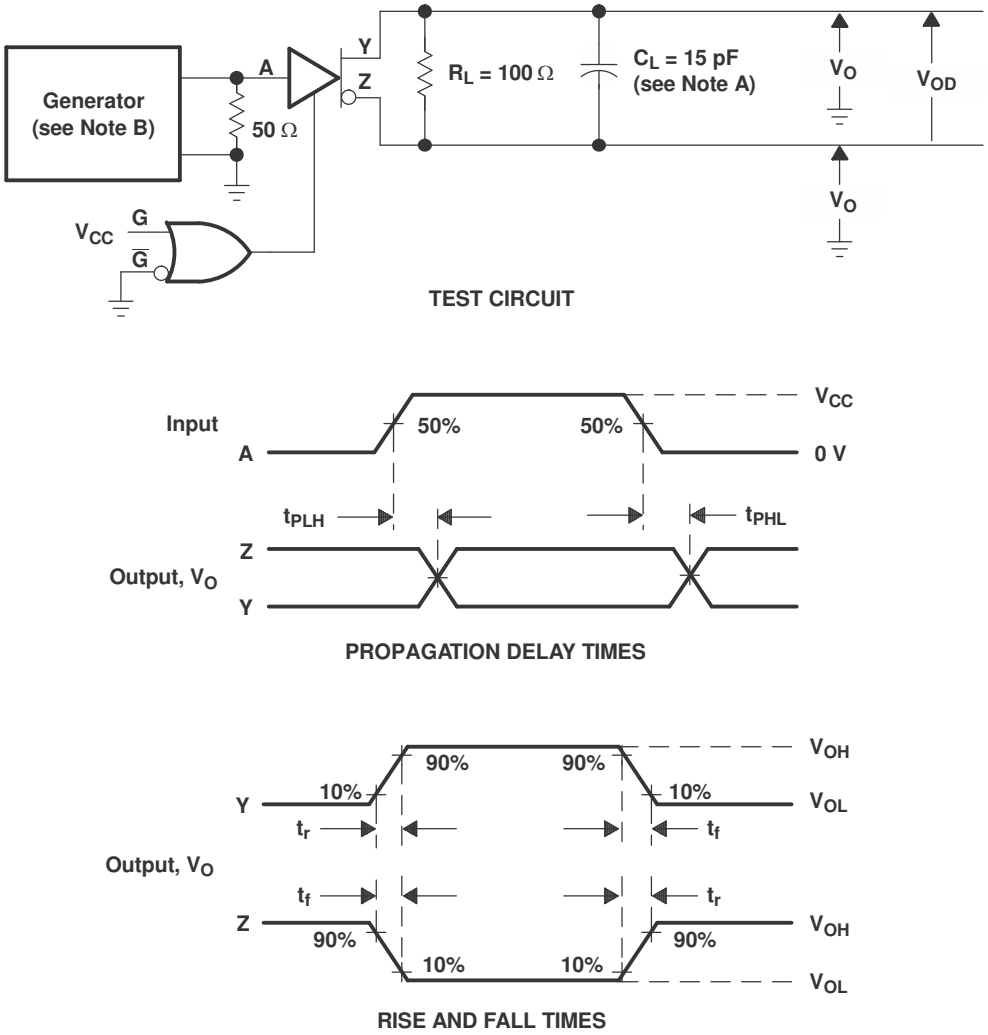

A. C_L includes probe and jig capacitance.

B. The input pulse is supplied by a generator having the following characteristics: PRR = 10MHz, Z_O = 50Ω, 50%v duty cycle, t_r and t_f ≤ 10ns.

Figure 6-2. Test Circuit and Voltage Waveforms, t_{PHL} and t_{PLH}

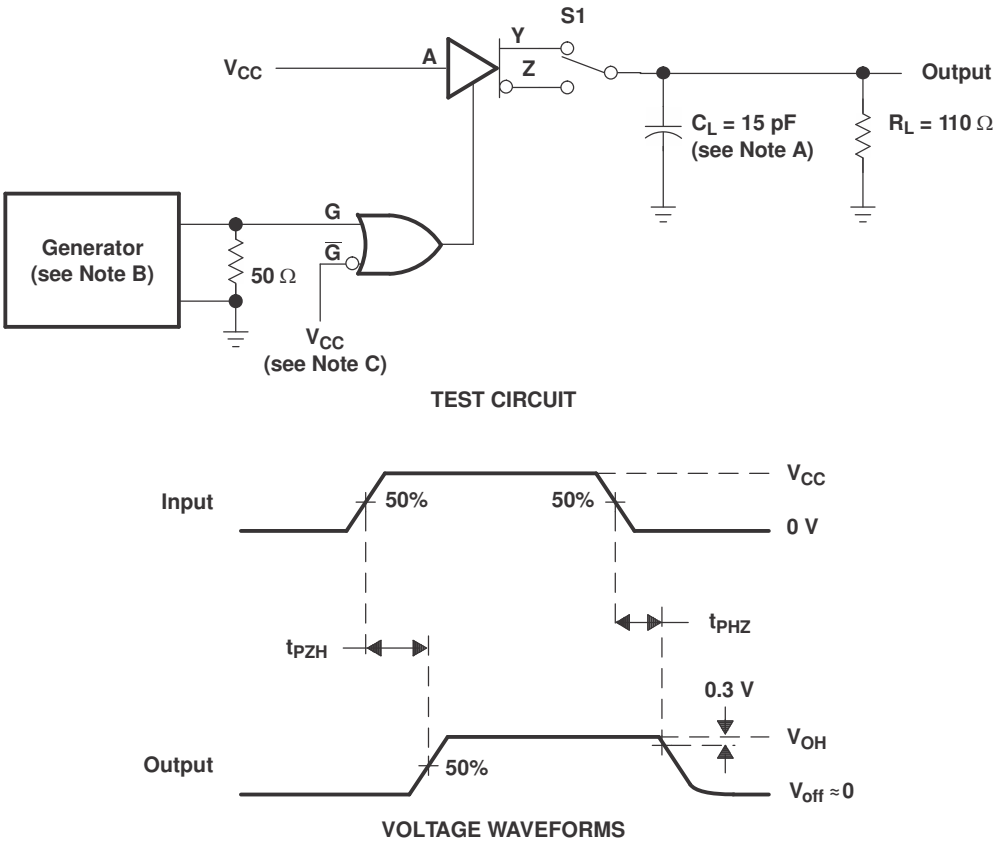

A. C_L includes probe and jig capacitance.

B. The input pulse is supplied by a generator having the following characteristics: PRR = 1MHz, Z_O = 50Ω, 50%v duty cycle, t_r and t_f (10% to 90%) ≤ 2ns.

C. To test the active-low enable $\overline{G}$, ground G and apply an inverted waveform to $\overline{G}$.

Figure 6-3. Test Circuit and Voltage Waveforms, t_{PZH} and t_{PHZ}

Copyright © 2024 Texas Instruments Incorporated

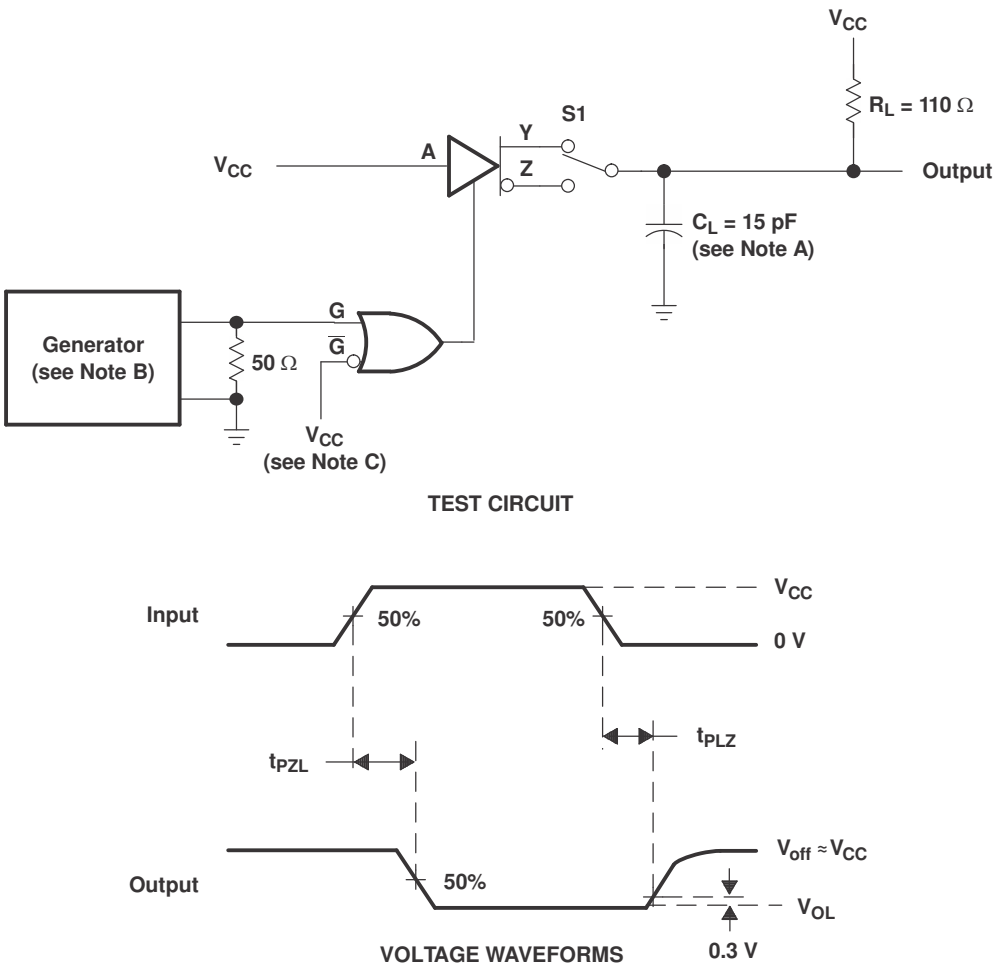

A. C_L includes probe and jig capacitance.

B. The input pulse is supplied by a generator having the following characteristics: PRR = 1MHz, Z_O = 50Ω, 50%v duty cycle, t_r and t_f (10% to 90%) ≤ 2ns.

C. To test the active-low enable $\overline{G}$, ground G and apply an inverted waveform to $\overline{G}$.

Figure 6-4. Test Circuit and Voltage Waveforms, t_{PZL} and t_{PLZ}

7 Detailed Description

7.1 Overview

The AM26LV31C and AM26LV31I are BiCMOS quadruple differential line drivers with 3-state outputs. The devices are designed to be similar to TIA/EIA-422-B and ITU Recommendation V.11 drivers with a single 3.3-V power supply. The drivers also integrate active-high and active-low enables for precise device control.

7.2 Functional Block Diagram

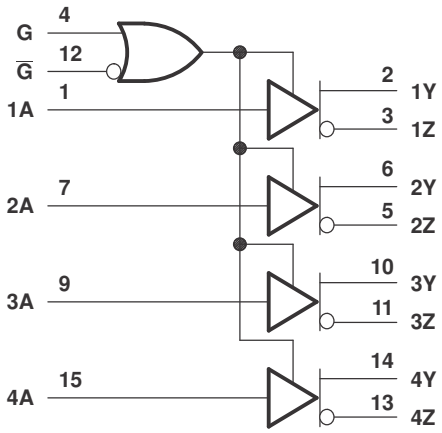

7.3 Feature Description

7.3.1 Active high and active low

The devices can be configured using the G and G logic inputs to select transmitter output. A logic high on the G pin or a logic low on the G pin enables the device to operate. These pins are simply a way to configure the logic to match that of the receiving or transmitting controller or microprocessor.

7.3.2 Operates from a 3.3-V Supply with up to 5-V Logic

While the transmitters operate from a single 3.3-V rail, the logic can operate off the same rail or another 5-V rail, making designs much more flexible to communicate to controllers.

7.3.3 High Speed Transmission

The AM26LV31C and AM26LV31I are optimized for balanced-bus transmission at switching rates up to 32 MHz. The devices are designed using Texas Instruments proprietary LinIMPACT-C60™ technology, facilitating ultra-low power consumption without sacrificing speed.

Copyright © 2024 Texas Instruments Incorporated

7.4 Device Functional Modes

Table 7-1. Function Table[1]

INPUT A	ENABLES G	ENABLES $\overline{G}$	OUTPUTS Y	OUTPUTS Z
H	H	X	H	L
L	H	X	L	H
H	X	L	H	L
L	X	L	L	H
X	L	H	Z	Z

(1) H = high level, L = low level, X = irrelevant, Z = high impedance (off)

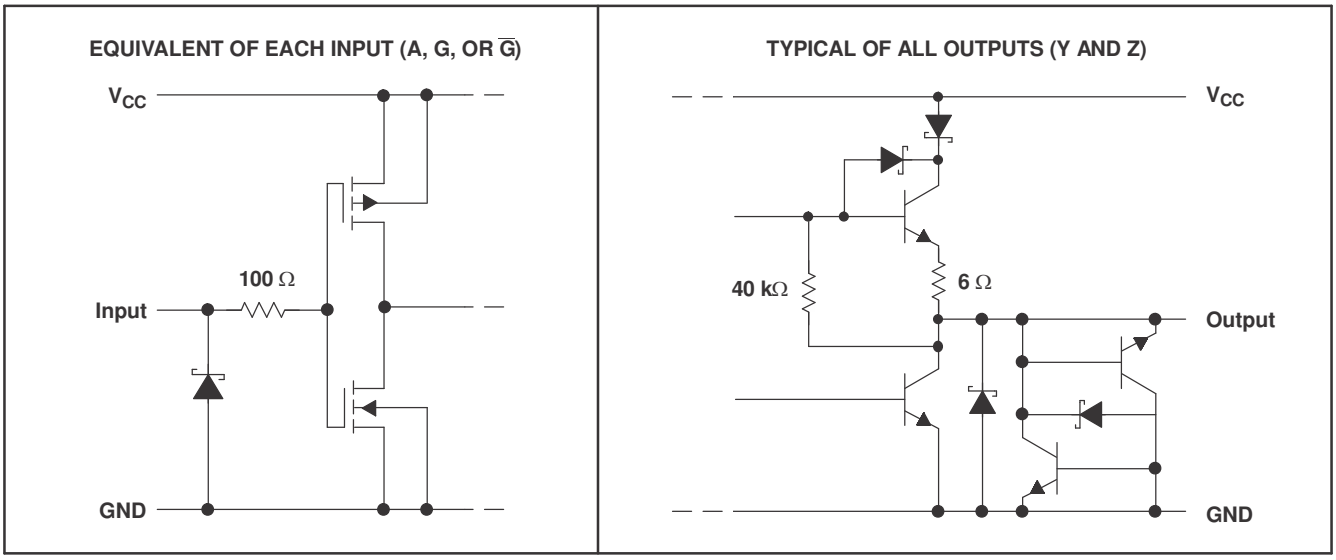

ll resistor values are nominal.

Figure 7-1. Schematic (Each Driver)

8 Application and Implementation

Note

Information in the following applications sections is not part of the TI component specification, and TI does not warrant its accuracy or completeness. TI's customers are responsible for determining suitability of components for their purposes, as well as validating and testing their design implementation to confirm system functionality.

8.1 Application Information

When designing a system that uses drivers, receivers, and transceivers, proper cable termination is essential for highly reliable applications with reduced reflections in the transmission line. If termination is used, it can be placed at the end of the cable near the last receiver. Factors to consider when determining the type of termination usually are performance requirements of the application and the ever-present factor, cost. The different types of termination techniques discussed are unterminated lines, parallel termination, AC termination, and multipoint termination. For laboratory experiments, 100 feet of 100-Ω, 24-AWG, twisted-pair cable (Bertek) was used. A single driver and receiver, TI AM26LV31C and AM26LV32C, respectively, were tested at room temperature with a 3.3-V supply voltage. The first plot shows output waveforms from the driver at the start of the cable (A/B); the second plot shows input waveforms to the receiver at the far end of the cable (Y).

8.2 Typical Application

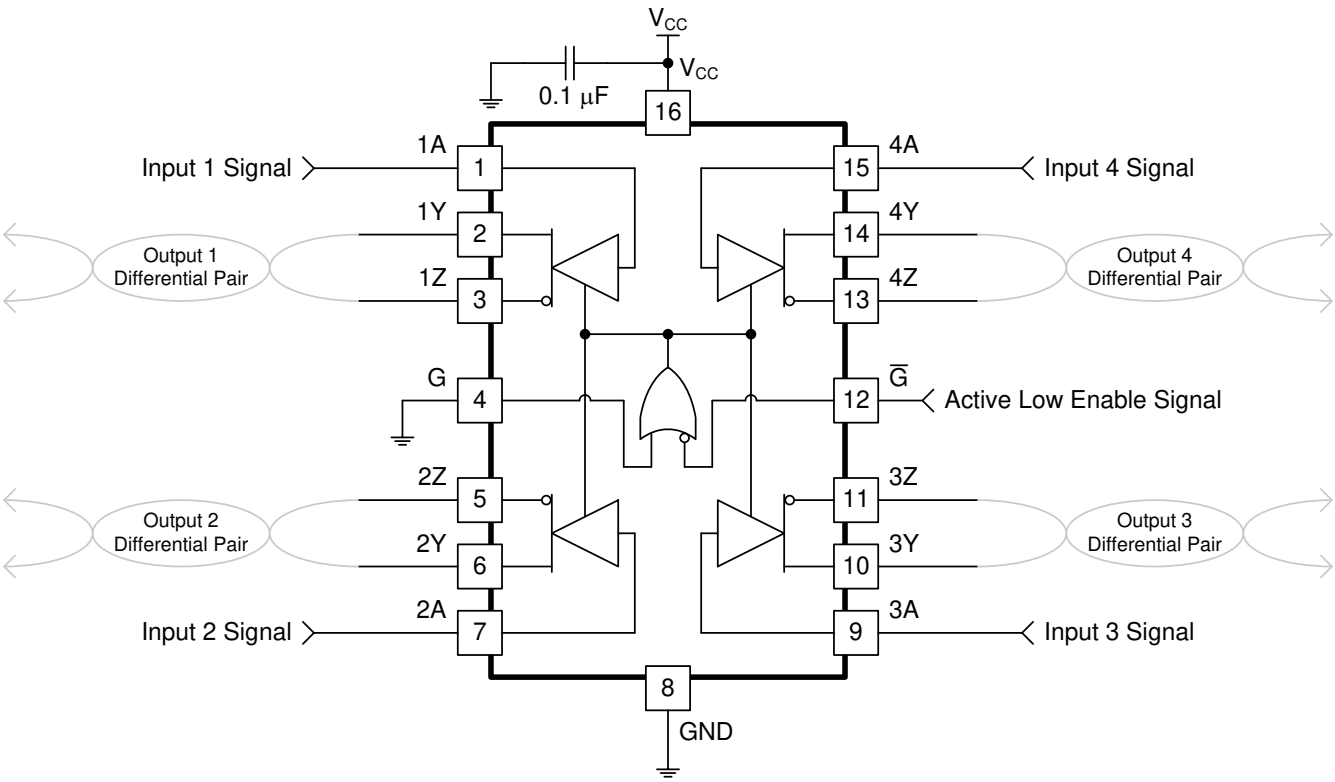

Figure 8-1. Differential Terminated Configuration With All Channels and Active Low Enable Used

Copyright © 2024 Texas Instruments Incorporated

8.2.1 Design Requirements

Resistor and capacitor (if used) termination values are shown for each laboratory experiment, but vary from system to system. For example, the termination resistor, RT, must be within 20% of the characteristic impedance, Zo, of the cable and can vary from about 80 Ω to 120 Ω.

This example requires the following:

- 3.3-V power source
- RS-485 bus operating at 32 MHz or less
- Connector that ensures the correct polarity for port pins

8.2.2 Detailed Design Procedure

Ensure values in Absolute Maximum Ratings are not exceeded. Supply voltage, V_{IH}, and V_{IL} must comply with Recommended Operating Conditions.

Place the device close to bus connector to keep traces (stub) short to prevent adding reflections to the bus line. If desired, add external fail-safe biasing to ensure 200 mV on the A-B port, if the drive is in high impedance state (see Failsafe in RS-485 data buses).

8.2.3 Application Curves

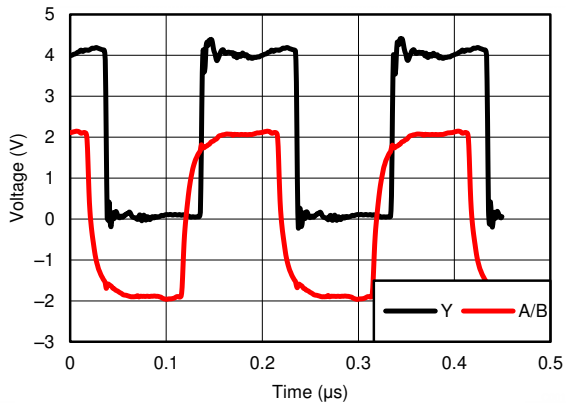

Figure 8-2. Differential 120-Ω Terminated Output Waveforms (Cat 5E Cable)

8.3 Power Supply Recommendations

Place a 0.1-µF bypass capacitors close to the power-supply pins to reduce errors coupling in from noisy or high impedance power supplies.

8.4 Layout

8.4.1 Layout Guidelines

For best operational performance of the device, use good PCB layout practices, including:

- Noise can propagate into analog circuitry through the power pins of the circuit as a whole, as well as the operational amplifier. Bypass capacitors are used to reduce the coupled noise by providing low impedance power sources local to the analog circuitry. Connect low-ESR, 0.1-µF ceramic bypass capacitors between supply pin and ground, placed as close to the device as possible.
- Separate grounding for analog and digital portions of circuitry is one of the simplest and most effective methods of noise suppression. One or more layers on multilayer PCBs are usually devoted to ground planes. A ground plane helps distribute heat and reduces EMI noise pickup. Make sure to physically separate digital and analog grounds, paying attention to the flow of the ground current.
- To reduce parasitic coupling, run the input traces as far away from the supply or output traces as possible. If it is not possible to keep them separate, it is much better to cross the sensitive trace perpendicular as opposed to in parallel with the noisy trace.

Copyright © 2024 Texas Instruments Incorporated

- Keep the length of input traces as short as possible. Always remember that the input traces are the most sensitive part of the circuit.
- Consider a driven, low-impedance guard ring around the critical traces. A guard ring can significantly reduce leakage currents from nearby traces that are at different potentials.

8.4.2 Layout Example

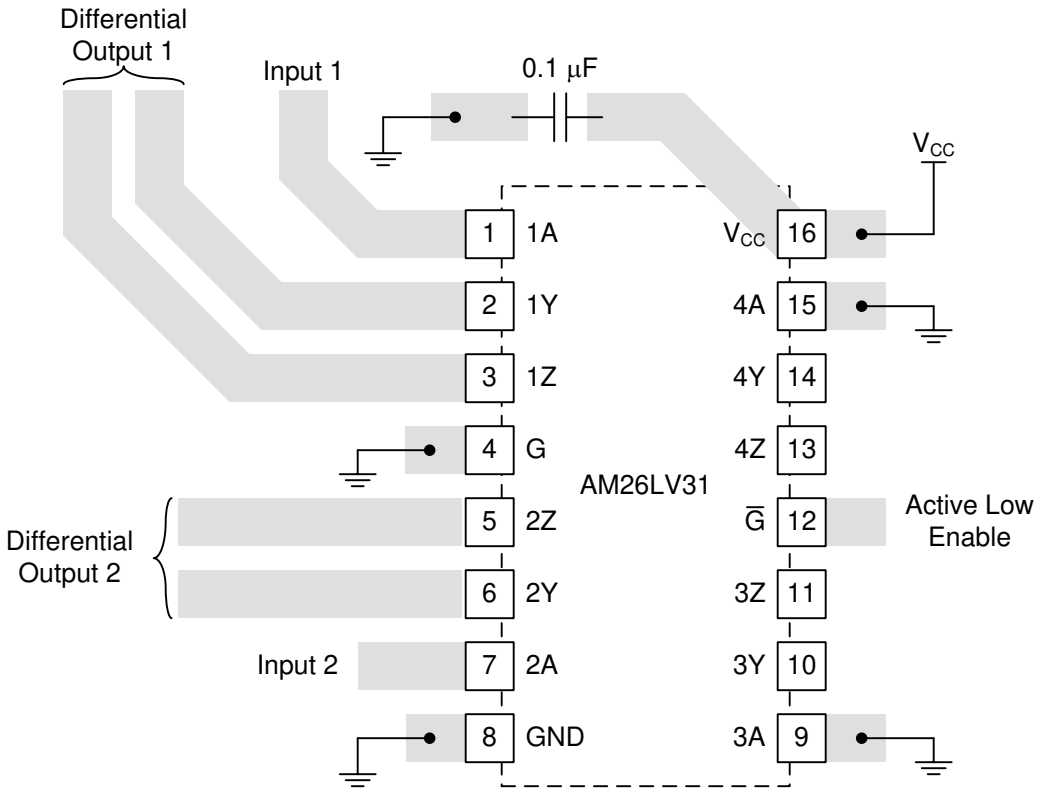

Figure 8-3. Trace Layout on PCB and Recommendations

Copyright © 2024 Texas Instruments Incorporated

9 Device and Documentation Support

9.1 Device Support

9.1.1 Development Support

9.2 Receiving Notification of Documentation Updates

To receive notification of documentation updates, navigate to the device product folder on ti.com. Click on *Subscribe to updates* to register and receive a weekly digest of any product information that has changed. For change details, review the revision history included in any revised document.

9.3 Support Resources

TI E2E™ support forums are an engineer's go-to source for fast, verified answers and design help — straight from the experts. Search existing answers or ask your own question to get the quick design help you need.

Linked content is provided "AS IS" by the respective contributors. They do not constitute TI specifications and do not necessarily reflect TI's views; see TI's Terms of Use.

9.4 Trademarks

LinIMPACT-C60™ is a trademark of Texas Instruments.
TI E2E™ is a trademark of Texas Instruments.
All trademarks are the property of their respective owners.

9.5 Electrostatic Discharge Caution

This integrated circuit can be damaged by ESD. Texas Instruments recommends that all integrated circuits be handled with appropriate precautions. Failure to observe proper handling and installation procedures can cause damage.

ESD damage can range from subtle performance degradation to complete device failure. Precision integrated circuits may be more susceptible to damage because very small parametric changes could cause the device not to meet its published specifications.

9.6 Glossary

TI Glossary	This glossary lists and explains terms, acronyms, and definitions.

10 Revision History

NOTE: Page numbers for previous revisions may differ from page numbers in the current version.

Changes from Revision H (April 2018) to Revision I (April 2024)	Page
• Changed the Device information to the *Package Information* table	1
• Changed the *Thermal Information* table values	4
• Changed Figure 5-1	6
• Changed the Note B in Figure 6-2	7

Changes from Revision G (May 2005) to Revision H (April 2018)	Page
• Added *Device Information* table, *ESD Ratings* table, *Feature Description* section, *Device Functional Modes*, *Application and Implementation* section, *Power Supply Recommendations* section, *Layout* section, *Device and Documentation Support* section, and *Mechanical, Packaging, and Orderable Information* section	1
• Changed the t_{PLH} and t_{PHL} MAX value From: 12 ns To: 20 ns in the *Switching Characteristics*	5
• Changed the $t_{sk(p)}$ and $t_{sk(o)}$ MAX value From: 1.5 ns To: 3 ns in the *Switching Characteristics*	5

11 Mechanical, Packaging, and Orderable Information

The following pages include mechanical, packaging, and orderable information. This information is the most current data available for the designated devices. This data is subject to change without notice and revision of this document. For browser-based versions of this data sheet, refer to the left-hand navigation.

Copyright © 2024 Texas Instruments Incorporated

PACKAGING INFORMATION

Orderable part number	Status (1)	Material type (2)	Package | Pins	Package qty | Carrier	RoHS (3)	Lead finish/ Ball material (4)	MSL rating/ Peak reflow (5)	Op temp (°C)	Part marking (6)
AM26LV31CD	Obsolete	Production	SOIC (D) | 16	-	-	Call TI	Call TI	0 to 70	AM26LV31C
AM26LV31CDR	Obsolete	Production	SOIC (D) | 16	-	-	Call TI	Call TI	0 to 70	AM26LV31C
AM26LV31CDRG4	Obsolete	Production	SOIC (D) | 16	-	-	Call TI	Call TI	0 to 70	AM26LV31C
AM26LV31CNSR	Obsolete	Production	SOP (NS) | 16	-	-	Call TI	Call TI	0 to 70	26LV31
AM26LV31ID	Obsolete	Production	SOIC (D) | 16	-	-	Call TI	Call TI	-45 to 85	AM26LV31I
AM26LV31IDR	Active	Production	SOIC (D) | 16	2500 | LARGE T&R	Yes	NIPDAU	Level-1-260C-UNLIM	-45 to 85	AM26LV31I
AM26LV31IDR.A	Active	Production	SOIC (D) | 16	2500 | LARGE T&R	Yes	NIPDAU	Level-1-260C-UNLIM	-45 to 85	AM26LV31I
AM26LV31INSR	Active	Production	SOP (NS) | 16	2000 | LARGE T&R	Yes	NIPDAU	Level-1-260C-UNLIM	-45 to 85	26LV31I
AM26LV31INSR.A	Active	Production	SOP (NS) | 16	2000 | LARGE T&R	Yes	NIPDAU	Level-1-260C-UNLIM	-45 to 85	26LV31I

(1) **Status:** For more details on status, see our product life cycle.

(2) **Material type:** When designated, preproduction parts are prototypes/experimental devices, and are not yet approved or released for full production. Testing and final process, including without limitation quality assurance, reliability performance testing, and/or process qualification, may not yet be complete, and this item is subject to further changes or possible discontinuation. If available for ordering, purchases will be subject to an additional waiver at checkout, and are intended for early internal evaluation purposes only. These items are sold without warranties of any kind.

(3) **RoHS values:** Yes, No, RoHS Exempt. See the TI RoHS Statement for additional information and value definition.

(4) **Lead finish/Ball material:** Parts may have multiple material finish options. Finish options are separated by a vertical ruled line. Lead finish/Ball material values may wrap to two lines if the finish value exceeds the maximum column width.

(5) **MSL rating/Peak reflow:** The moisture sensitivity level ratings and peak solder (reflow) temperatures. In the event that a part has multiple moisture sensitivity ratings, only the lowest level per JEDEC standards is shown. Refer to the shipping label for the actual reflow temperature that will be used to mount the part to the printed circuit board.

(6) **Part marking:** There may be an additional marking, which relates to the logo, the lot trace code information, or the environmental category of the part.

Multiple part markings will be inside parentheses. Only one part marking contained in parentheses and separated by a "~" will appear on a part. If a line is indented then it is a continuation of the previous line and the two combined represent the entire part marking for that device.

Important Information and Disclaimer: The information provided on this page represents TI's knowledge and belief as of the date that it is provided. TI bases its knowledge and belief on information provided by third parties, and makes no representation or warranty as to the accuracy of such information. Efforts are underway to better integrate information from third parties. TI has taken and continues to take reasonable steps to provide representative

and accurate information but may not have conducted destructive testing or chemical analysis on incoming materials and chemicals. TI and TI suppliers consider certain information to be proprietary, and thus CAS numbers and other limited information may not be available for release.

In no event shall TI's liability arising out of such information exceed the total purchase price of the TI part(s) at issue in this document sold by TI to Customer on an annual basis.

TAPE AND REEL INFORMATION

REEL DIMENSIONS

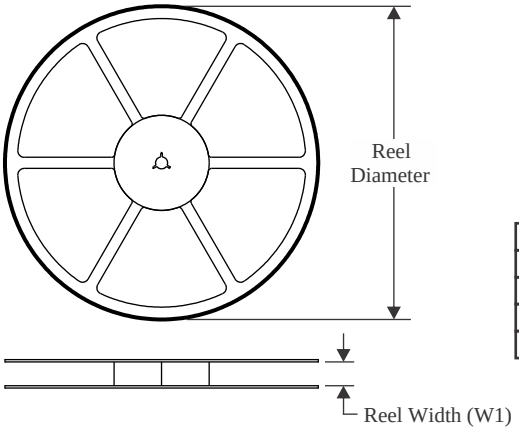

TAPE DIMENSIONS

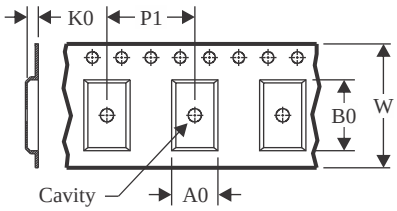

A0	Dimension designed to accommodate the component width
B0	Dimension designed to accommodate the component length
K0	Dimension designed to accommodate the component thickness
W	Overall width of the carrier tape
P1	Pitch between successive cavity centers

QUADRANT ASSIGNMENTS FOR PIN 1 ORIENTATION IN TAPE

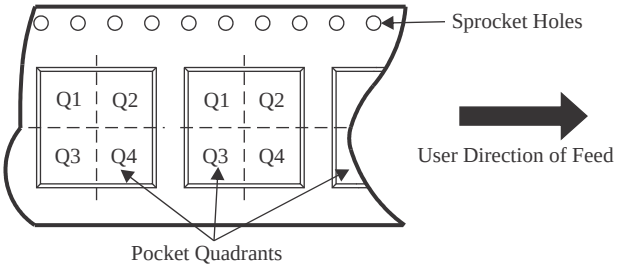

*All dimensions are nominal

Device	Package Type	Package Drawing	Pins	SPQ	Reel Diameter (mm)	Reel Width W1 (mm)	A0 (mm)	B0 (mm)	K0 (mm)	P1 (mm)	W (mm)	Pin1 Quadrant
AM26LV31IDR	SOIC	D	16	2500	330.0	16.4	6.5	10.3	2.1	8.0	16.0	Q1
AM26LV31IDR	SOIC	D	16	2500	330.0	16.4	6.5	10.3	2.1	8.0	16.0	Q1
AM26LV31INSR	SOP	NS	16	2000	330.0	16.4	8.2	10.5	2.5	12.0	16.0	Q1
AM26LV31INSR	SOP	NS	16	2000	330.0	16.4	8.2	10.5	2.5	12.0	16.0	Q1

TAPE AND REEL BOX DIMENSIONS

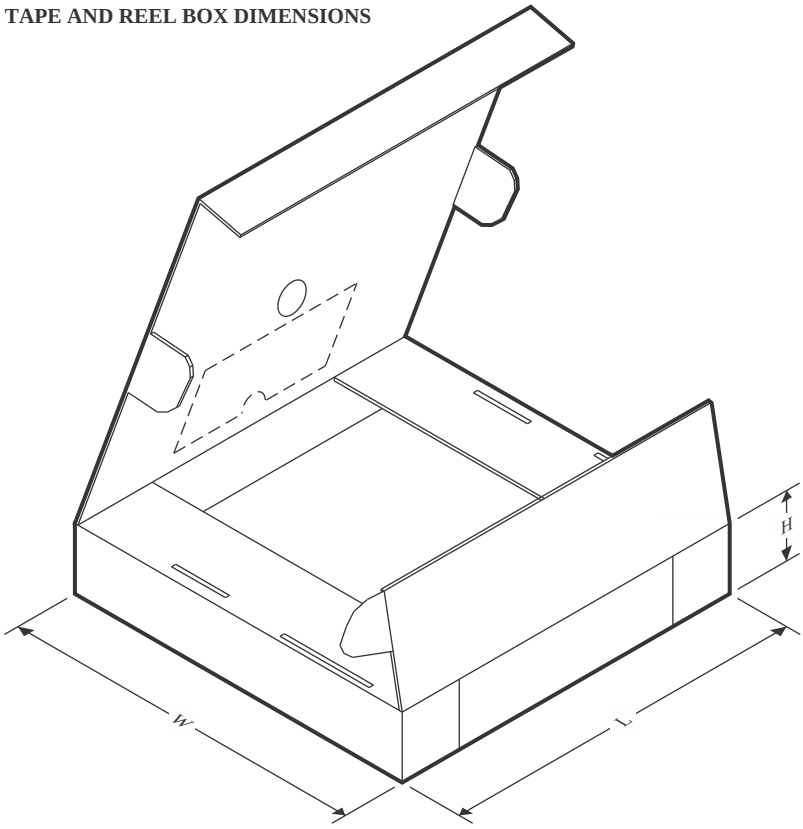

*All dimensions are nominal

Device	Package Type	Package Drawing	Pins	SPQ	Length (mm)	Width (mm)	Height (mm)
AM26LV31IDR	SOIC	D	16	2500	353.0	353.0	32.0
AM26LV31IDR	SOIC	D	16	2500	340.5	336.1	32.0
AM26LV31INSR	SOP	NS	16	2000	353.0	353.0	32.0
AM26LV31INSR	SOP	NS	16	2000	356.0	356.0	35.0

D (R–PDSO–G16) PLASTIC SMALL OUTLINE

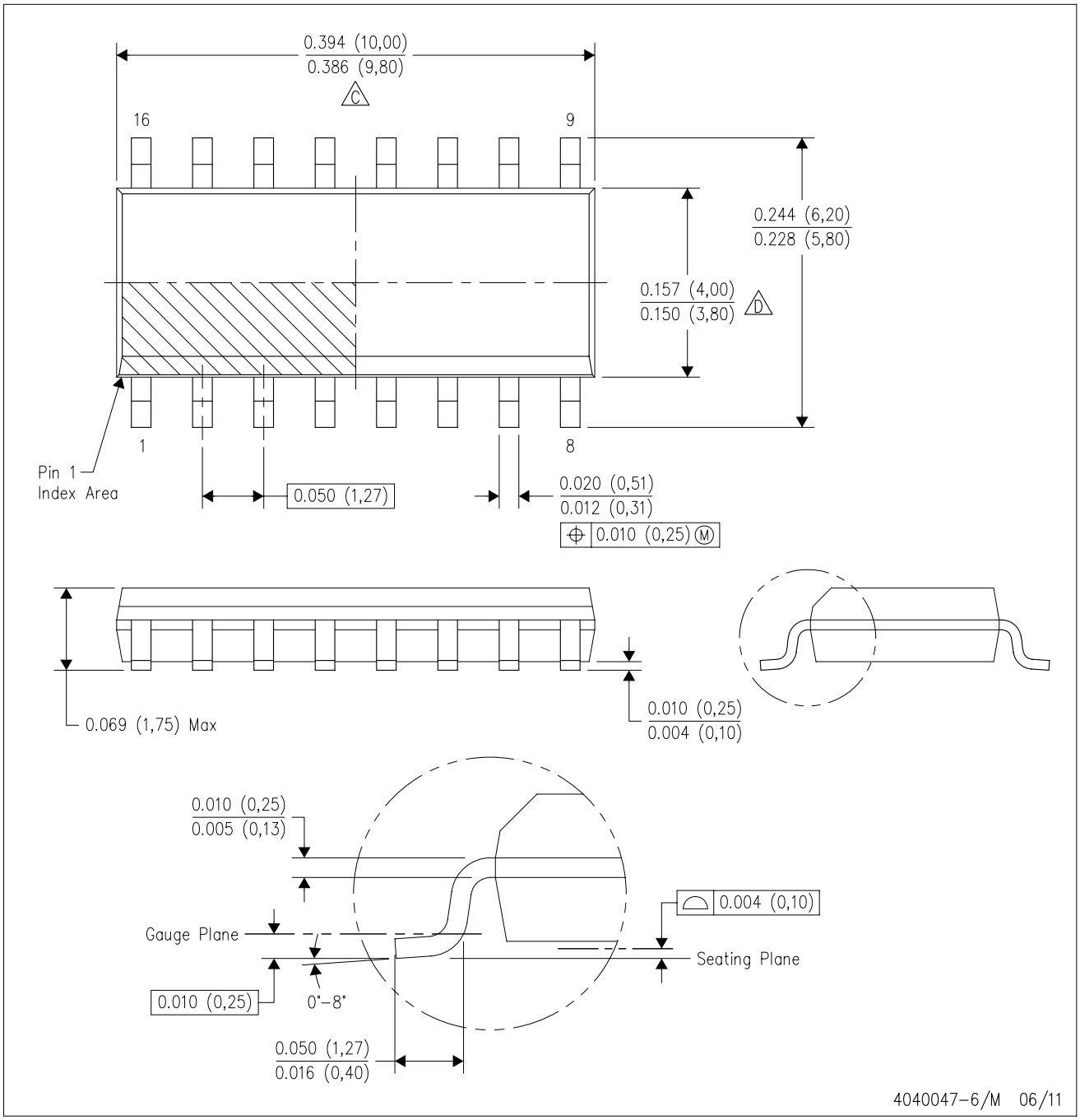

NOTES:
A. All linear dimensions are in inches (millimeters).
B. This drawing is subject to change without notice.
C. Body length does not include mold flash, protrusions, or gate burrs. Mold flash, protrusions, or gate burrs shall not exceed 0.006 (0,15) each side.
D. Body width does not include interlead flash. Interlead flash shall not exceed 0.017 (0,43) each side.
E. Reference JEDEC MS–012 variation AC.

MECHANICAL DATA

NS (R-PDSO-G)** **PLASTIC SMALL-OUTLINE PACKAGE**

14-PINS SHOWN

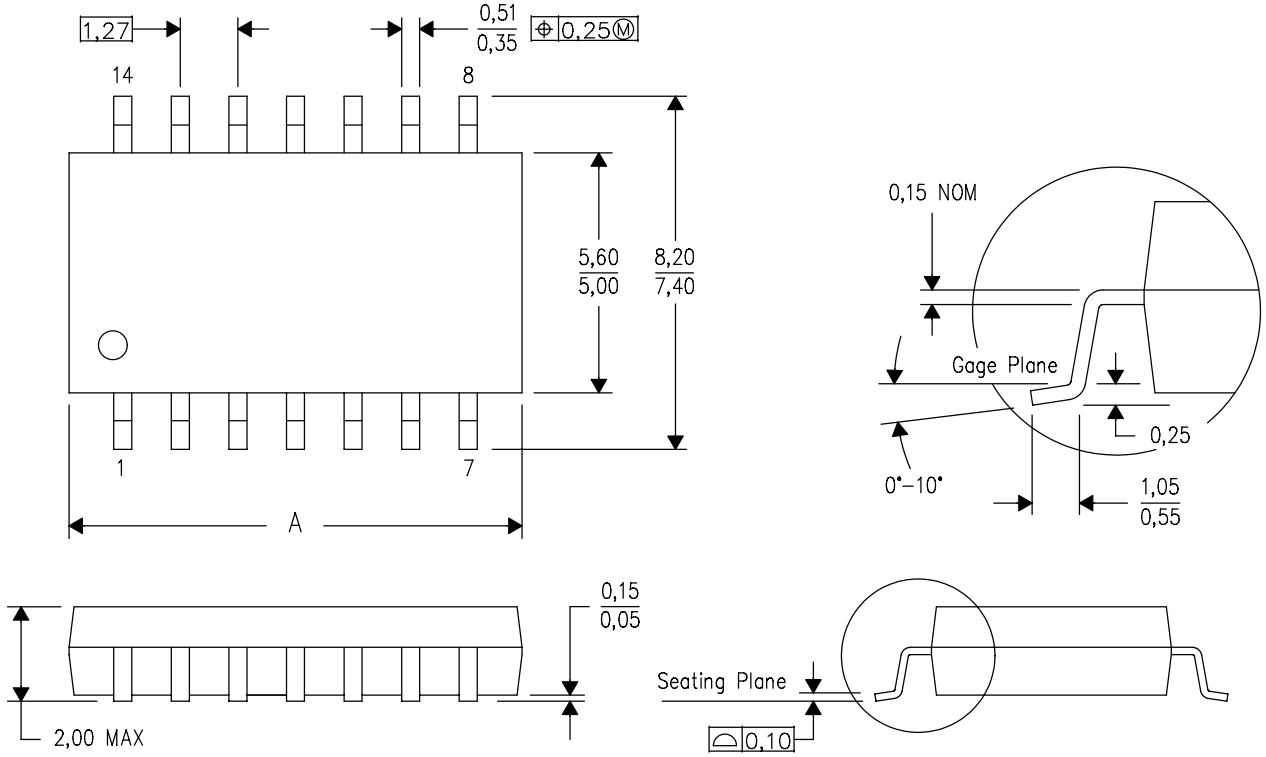

DIM \ PINS **	14	16	20	24
A MAX	10,50	10,50	12,90	15,30
A MIN	9,90	9,90	12,30	14,70

4040062/C 03/03

NOTES:
A. All linear dimensions are in millimeters.
B. This drawing is subject to change without notice.
C. Body dimensions do not include mold flash or protrusion, not to exceed 0,15.

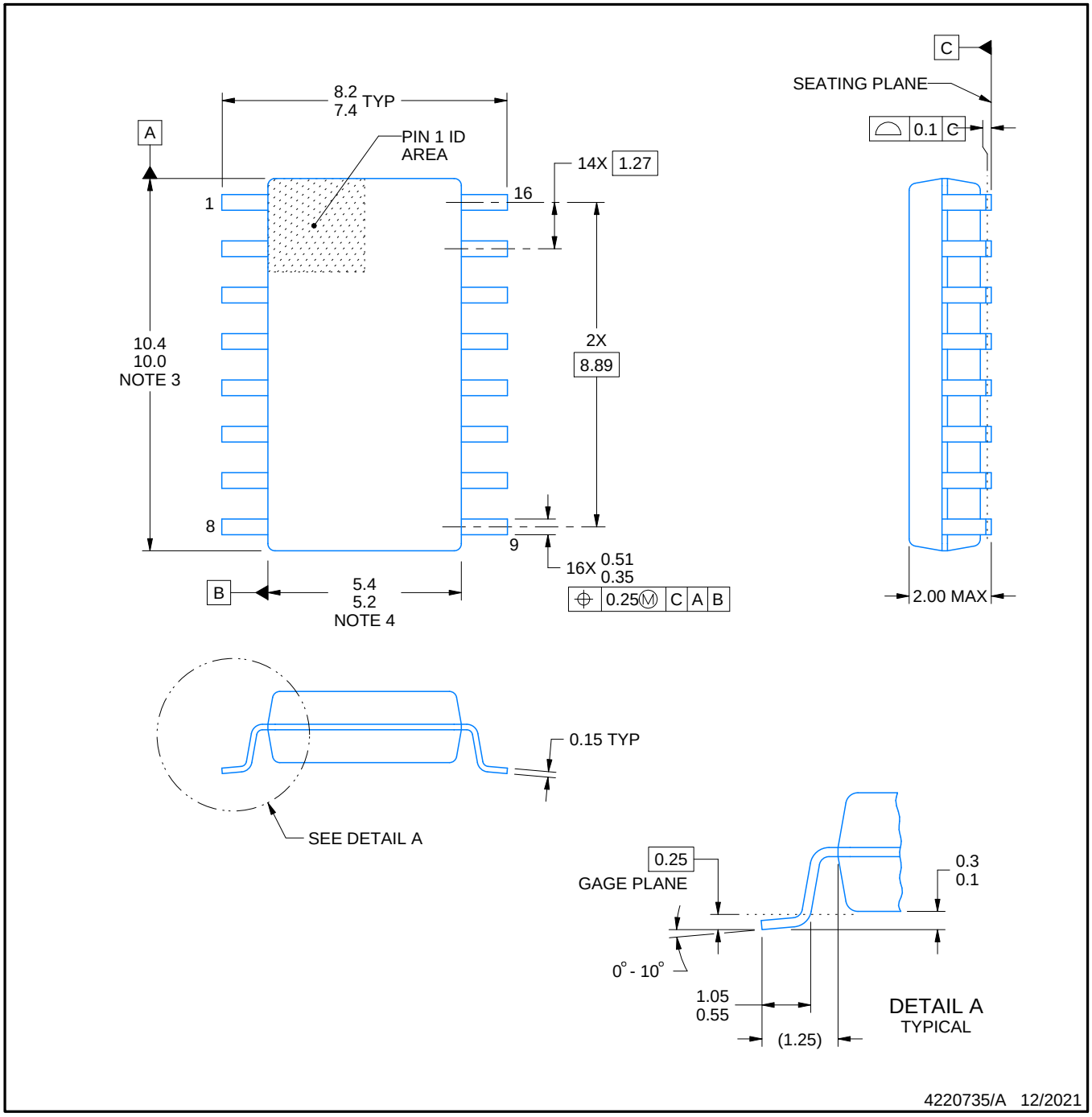

NOTES:

1. All linear dimensions are in millimeters. Dimensions in parenthesis are for reference only. Dimensioning and tolerancing per ASME Y14.5M.
2. This drawing is subject to change without notice.
3. This dimension does not include mold flash, protrusions, or gate burrs. Mold flash, protrusions, or gate burrs shall not exceed 0.15 mm, per side.
4. This dimension does not include interlead flash. Interlead flash shall not exceed 0.25 mm, per side.

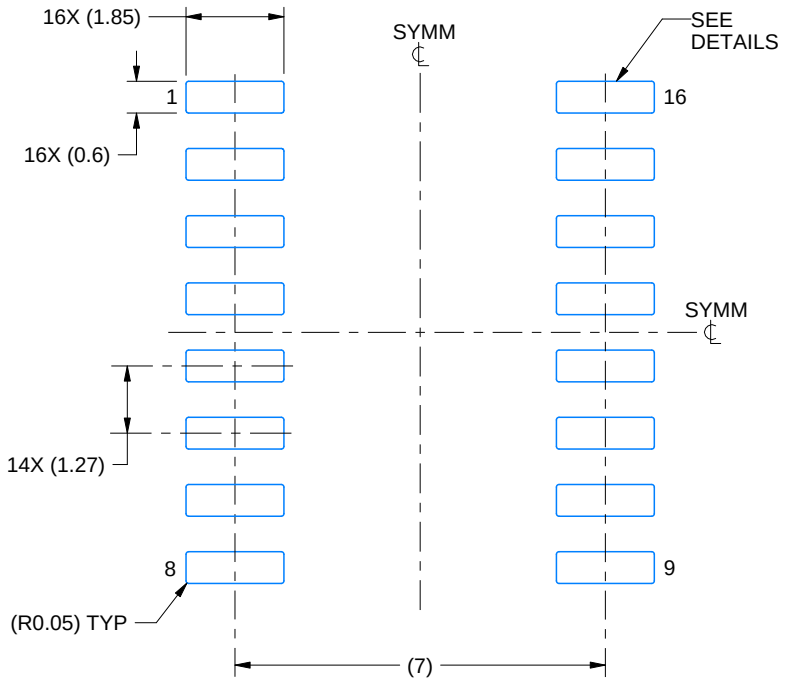

LAND PATTERN EXAMPLE
SCALE:7X

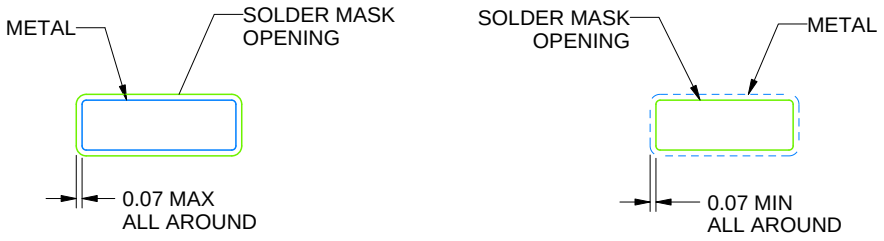

NON SOLDER MASK DEFINED

SOLDER MASK DEFINED

SOLDER MASK DETAILS

4220735/A 12/2021

NOTES: (continued)

5. Publication IPC-7351 may have alternate designs.
6. Solder mask tolerances between and around signal pads can vary based on board fabrication site.

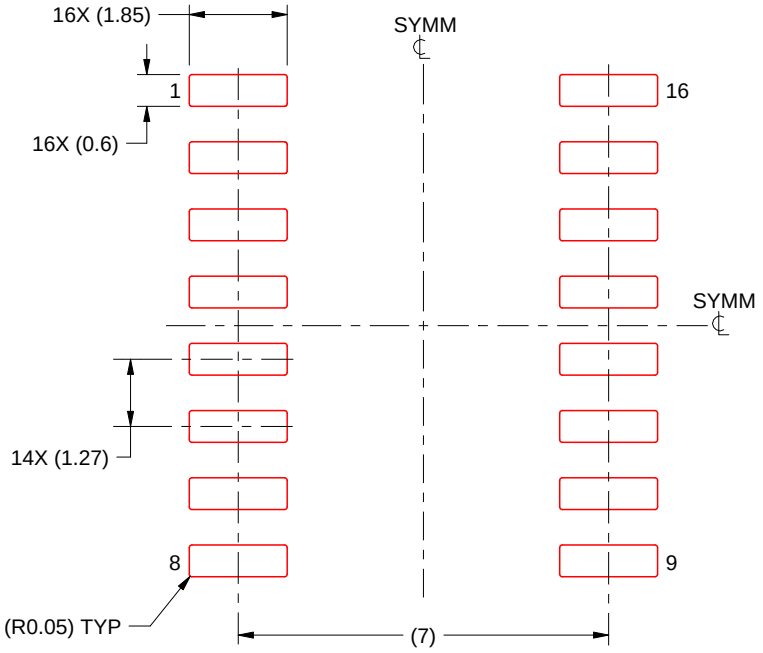

SOLDER PASTE EXAMPLE
BASED ON 0.125 mm THICK STENCIL
SCALE:7X

4220735/A 12/2021

NOTES: (continued)

7. Laser cutting apertures with trapezoidal walls and rounded corners may offer better paste release. IPC-7525 may have alternate design recommendations.
8. Board assembly site may have different recommendations for stencil design.

IMPORTANT NOTICE AND DISCLAIMER

TI PROVIDES TECHNICAL AND RELIABILITY DATA (INCLUDING DATA SHEETS), DESIGN RESOURCES (INCLUDING REFERENCE DESIGNS), APPLICATION OR OTHER DESIGN ADVICE, WEB TOOLS, SAFETY INFORMATION, AND OTHER RESOURCES “AS IS” AND WITH ALL FAULTS, AND DISCLAIMS ALL WARRANTIES, EXPRESS AND IMPLIED, INCLUDING WITHOUT LIMITATION ANY IMPLIED WARRANTIES OF MERCHANTABILITY, FITNESS FOR A PARTICULAR PURPOSE OR NON-INFRINGEMENT OF THIRD PARTY INTELLECTUAL PROPERTY RIGHTS.

These resources are intended for skilled developers designing with TI products. You are solely responsible for (1) selecting the appropriate TI products for your application, (2) designing, validating and testing your application, and (3) ensuring your application meets applicable standards, and any other safety, security, regulatory or other requirements.

These resources are subject to change without notice. TI grants you permission to use these resources only for development of an application that uses the TI products described in the resource. Other reproduction and display of these resources is prohibited. No license is granted to any other TI intellectual property right or to any third party intellectual property right. TI disclaims responsibility for, and you will fully indemnify TI and its representatives against, any claims, damages, costs, losses, and liabilities arising out of your use of these resources.

TI’s products are provided subject to TI’s Terms of Sale or other applicable terms available either on ti.com or provided in conjunction with such TI products. TI’s provision of these resources does not expand or otherwise alter TI’s applicable warranties or warranty disclaimers for TI products.

TI objects to and rejects any additional or different terms you may have proposed.

Mailing Address: Texas Instruments, Post Office Box 655303, Dallas, Texas 75265
Copyright © 2025, Texas Instruments Incorporated