SN74AXC8T245-Q1 Automotive 8-Bit Dual-Supply Bus Transceiver With Configurable Voltage Translation and Tri-State Outputs

1 Features

- AEC-Q100 qualified for automotive applications
- Available in wettable flank QFN (WRGY) package
- Qualified fully configurable dual-rail design allows each port to operate with a power supply range from 0.65V to 3.6V
- Operating temperature from –40°C to +125°C
- Multiple direction-control pins to allow simultaneous up and down translation
- Up to 380Mbps support when translating from 1.8V to 3.3V
- V_{CC} isolation feature to effectively Isolate both buses in a power-down scenario
- Partial power-down mode to limit backflow current in a power-down scenario
- Compatible with SN74AVC8T245-Q1 level shifter
- Latch-up performance exceeds 100mA per JESD 78, class II

2 Applications

- Infotainment head unit
- ADAS fusion
- ADAS front camera
- HEV battery management system

3 Description

The SN74AXC8T245-Q1 AEC-Q100 qualified device is an 8-bit non-inverting bus transceiver that resolves voltage level mismatch between devices operating at the latest voltage nodes (0.7V, 0.8V, and 0.9V) and devices operating at industry standard voltage nodes (1.8V, 2.5V, and 3.3V) and vice versa.

The device operates by using two independent power-supply rails (V_{CCA} and V_{CCB}) that operate as low as 0.65V. Data pins A1 through A8 are designed to track V_{CCA}, which accepts any supply voltage from 0.65V to 3.6V. Data pins B1 through B8 are designed to track V_{CCB}, which accepts any supply voltage from 0.65V to 3.6V.

The SN74AXC8T245-Q1 device is designed for asynchronous communication between data buses. The device transmits data from the A bus to the B bus or from the B bus to the A bus, depending on the logic level of the direction-control inputs (DIR1 and DIR2). The output-enable ($\overline{OE}$) input is used to disable the outputs so the buses are effectively isolated.

The SN74AXC8T245-Q1 device is designed so the control pins (DIR and $\overline{OE}$) are referenced to V_{CCA}.

This device is fully specified for partial-power-down applications using I_{off}. The I_{off} circuitry disables the outputs when the device is powered down. This inhibits current backflow into the device which prevents damage to the device.

The V_{CC} isolation feature is designed so that if either V_{CC} input supply is below 100mV, all level shifter outputs are disabled and placed into a high-impedance state.

To put the level shifter I/Os in the high-impedance state during power up or power down, tie $\overline{OE}$ to V_{CCA} through a pullup resistor; the current-sinking capability of the driver determines the minimum value of the resistor.

Package Information

PART NUMBER	PACKAGE(1)	PACKAGE SIZE(2)
SN74AXC8T245-Q1	PW (TSSOP, 24)	7.8mm × 6.4mm
	RHL (VQFN, 24)	5.5mm × 3.5mm
	RGY (VQFN, 24)	5.5mm × 3.5mm

(1) For more information, see Section 11
(2) The package size (length × width) is a nominal value and includes pins, where applicable.

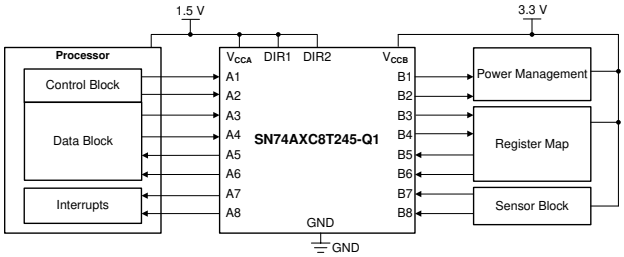

Typical Application Schematic

An IMPORTANT NOTICE at the end of this data sheet addresses availability, warranty, changes, use in safety-critical applications, intellectual property matters and other important disclaimers. PRODUCTION DATA.

Table of Contents

1 Features.....1
2 Applications.....1
3 Description.....1
4 Pin Configuration and Functions.....2
5 Specifications.....4
5.1 Absolute Maximum Ratings.....4
5.2 ESD Ratings.....4
5.3 Recommended Operating Conditions.....5
5.4 Thermal Information.....5
5.5 Electrical Characteristics.....6
5.6 Switching Characteristics, V_{CCA} = 0.7V.....7
5.7 Switching Characteristics, V_{CCA} = 0.8V.....8
5.8 Switching Characteristics, V_{CCA} = 0.9V.....9
5.9 Switching Characteristics, V_{CCA} = 1.2V.....10
5.10 Switching Characteristics, V_{CCA} = 1.5V.....11
5.11 Switching Characteristics, V_{CCA} = 1.8V.....12
5.12 Switching Characteristics, V_{CCA} = 2.5V.....13
5.13 Switching Characteristics, V_{CCA} = 3.3V.....14
5.14 Operating Characteristics: T_A = 25°C.....15
5.15 Typical Characteristics.....17
6 Parameter Measurement Information.....18
7 Detailed Description.....20
7.1 Overview.....20
7.2 Functional Block Diagram.....20
7.3 Feature Description.....21
7.4 Device Functional Modes.....22
8 Application and Implementation.....23
8.1 Application Information.....23
8.2 Typical Application.....23
8.3 Power Supply Recommendations.....25
8.4 Layout.....25
9 Device and Documentation Support.....26
9.1 Documentation Support.....26
9.2 Receiving Notification of Documentation Updates.....26
9.3 Support Resources.....26
9.4 Trademarks.....26
9.5 Electrostatic Discharge Caution.....26
9.6 Glossary.....26
10 Revision History.....26
11 Mechanical, Packaging, and Orderable Information.....27

4 Pin Configuration and Functions

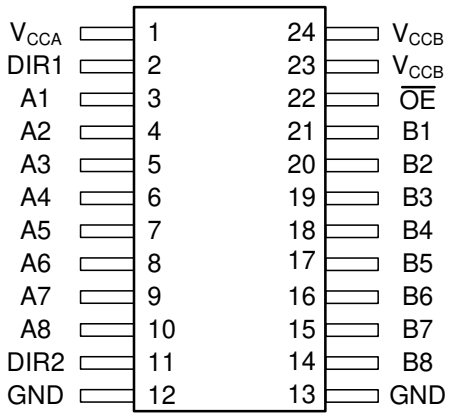

Figure 4-1. PW Package, 24-Pin TSSOP (Top View)

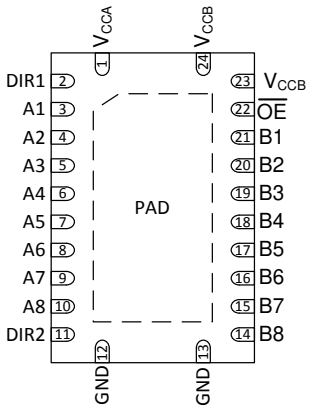

PAD — may be grounded (recommended) or left floating.

Figure 4-2. RHL and WRGY Package, 24-Pin VQFN (Top View)

Table 4-1. Pin Functions

PIN		TYPE[(1)]	DESCRIPTION
NAME	NO.		
A1	3	I/O	Input/output A1. Referenced to V_{CCA}.
A2	4	I/O	Input/output A2. Referenced to V_{CCA}.
A3	5	I/O	Input/output A3. Referenced to V_{CCA}.
A4	6	I/O	Input/output A4. Referenced to V_{CCA}.
A5	7	I/O	Input/output A5. Referenced to V_{CCA}.
A6	8	I/O	Input/output A6. Referenced to V_{CCA}.
A7	9	I/O	Input/output A7. Referenced to V_{CCA}.
A8	10	I/O	Input/output A8. Referenced to V_{CCA}.

Copyright © 2024 Texas Instruments Incorporated

Table 4-1. Pin Functions (continued)

PIN		TYPE[(1)]	DESCRIPTION
NAME	NO.		
B1	21	I/O	Input/output B1. Referenced to V_{CCB}.
B2	20	I/O	Input/output B2. Referenced to V_{CCB}.
B3	19	I/O	Input/output B3. Referenced to V_{CCB}.
B4	18	I/O	Input/output B4. Referenced to V_{CCB}.
B5	17	I/O	Input/output B5. Referenced to V_{CCB}.
B6	16	I/O	Input/output B6. Referenced to V_{CCB}.
B7	15	I/O	Input/output B7. Referenced to V_{CCB}.
B8	14	I/O	Input/output B8. Referenced to V_{CCB}.
DIR1	2	I	Direction-control signal 1. Referenced to V_{CCA}. Refer to Table 7-1.
DIR2	11	I	Direction-control signal 2. Refer to Table 7-1. Referenced to V_{CCA}. Tie to GND to maintain backward compatibility with SN74AVC8T245-Q1 device.
GND	12	—	Ground
	13	—	Ground
$\overline{OE}$	22	I	Output Enable. Pull to GND to enable all outputs. Pull to V_{CCA} to place all outputs in high-impedance mode. Referenced to V_{CCA}. Refer to Table 7-1.
V_{CCA}	1	—	A-port supply voltage. 0.65V ≤ V_{CCA} ≤ 3.6V
V_{CCB}	23	—	B-port supply voltage. 0.65V ≤ V_{CCB} ≤ 3.6V
	24	—	B-port supply voltage. 0.65V ≤ V_{CCB} ≤ 3.6V

(1) PAD - may be grounded (recommended) or left floating.

Copyright © 2024 Texas Instruments Incorporated

5 Specifications

5.1 Absolute Maximum Ratings

over operating free-air temperature range (unless otherwise noted)[1]

		MIN	MAX	UNIT
Supply voltage, V_{CCA}		–0.5	4.2	V
Supply voltage, V_{CCB}		–0.5	4.2	V
Input voltage, V_I [2]	I/O ports (A port)	–0.5	4.2	V
	I/O ports (B port)	–0.5	4.2	
	Control inputs	–0.5	4.2	
Voltage applied to any output in the high-impedance or power-off state, V_O [2]	A port	–0.5	4.2	V
	B port	–0.5	4.2	
Voltage applied to any output in the high or low state, V_O [2] [3]	A port	–0.5	V_{CCA} + 0.2	V
	B port	–0.5	V_{CCB} + 0.2	
Input clamp current, I_{IK}	V_I < 0	–50		mA
Output clamp current, I_{OK}	V_O < 0	–50		mA
Continuous output current, I_O		–50	50	mA
Continuous current through V_{CCA}, V_{CCB}, or GND		–100	100	mA
Junction Temperature, T_J			150	°C
Storage temperature, T_{stg}		–65	150	°C

(1) Stresses beyond those listed under *Absolute Maximum Ratings* may cause permanent damage to the device. These are stress ratings only, which do not imply functional operation of the device at these or any other conditions beyond those indicated under *Recommended Operating Conditions*. Exposure to absolute-maximum-rated conditions for extended periods may affect device reliability.
(2) The input voltage and output negative-voltage ratings may be exceeded if the input and output current ratings are observed.
(3) The output positive-voltage rating may be exceeded up to 4.2V maximum if the output current rating is observed.

5.2 ESD Ratings

			VALUE	UNIT
$V_{(ESD)}$	Electrostatic discharge	Human-body model (HBM), per AEC Q100-002[1]	±8000	V
		Charged-device model (CDM), per AEC Q100-011	±1000	

(1) AEC Q100-002 indicates that HBM stressing shall be in accordance with the ANSI/ESDA/JEDEC JS-001 specification

Copyright © 2024 Texas Instruments Incorporated

5.3 Recommended Operating Conditions

over operating free-air temperature range (unless otherwise noted) (1) (2) (3)

				MIN	MAX	UNIT
V_{CCA}	Supply voltage			0.65	3.6	V
V_{CCB}	Supply voltage			0.65	3.6	V
V_{IH}	High-level input voltage	Data inputs	V_{CCI} = 0.65V - 0.75V	V_{CCI} × 0.70		V
			V_{CCI} = 0.76V - 1V	V_{CCI} × 0.70		
			V_{CCI} = 1.1V - 1.95V	V_{CCI} × 0.65		
			V_{CCI} = 2.3V - 2.7V	1.6		
			V_{CCI} = 3V - 3.6V	2		
		Control inputs (DIR, $\overline{OE}$) Referenced to V_{CCA}	V_{CCA} = 0.65V - 0.75V	V_{CCA} × 0.70		
			V_{CCA} = 0.76V - 1V	V_{CCA} × 0.70		
			V_{CCA} = 1.1V - 1.95V	V_{CCA} × 0.65		
			V_{CCA} = 2.3V - 2.7V	1.6		
			V_{CCA} = 3V - 3.6V	2		
V_{IL}	Low-level input voltage	Data inputs	V_{CCI} = 0.65V - 0.75V		V_{CCI} × 0.30	V
			V_{CCI} = 0.76V - 1V		V_{CCI} × 0.30	
			V_{CCI} = 1.1V - 1.95V		V_{CCI} × 0.35	
			V_{CCI} = 2.3V - 2.7V		0.7	
			V_{CCI} = 3V - 3.6V		0.8	
		Control inputs (DIR, $\overline{OE}$) Referenced to V_{CCA}	V_{CCA} = 0.65V - 0.75V		V_{CCA} × 0.30	
			V_{CCA} = 0.76V - 1V		V_{CCA} × 0.30	
			V_{CCA} = 1.1V - 1.95V		V_{CCA} × 0.35	
			V_{CCA} = 2.3V - 2.7V		0.7	
			V_{CCA} = 3V - 3.6V		0.8	
V_I	Input voltage(3)			0	3.6	V
V_O	Output voltage	Active state		0	V_{CCO} (2)	V
		Tri-state		0	3.6	
Δt/Δv	Input transition rise or fall rate				10	ns/V
T_A	Operating free-air temperature			–40	125	°C

(1) V_{CCI} is the V_{CC} associated with the input port.
(2) V_{CCO} is the V_{CC} associated with the output port.
(3) All unused data inputs of the device must be held at V_{CCI} or GND for proper device operation. See the *Implications of Slow or Floating CMOS Inputs* application report.

5.4 Thermal Information

THERMAL METRIC(1)		SN74AXC8T245-Q1-Q1			UNIT
		PW (TSSOP)	RHL (VQFN)	WRGY (VQFN)	
		24 PINS	24 PINS	24 PINS	
$R_{\theta JA}$	Junction-to-ambient thermal resistance	92.0	35.0	48.1	°C/W
$R_{\theta JC(top)}$	Junction-to-case (top) thermal resistance	29.3	39.9	43.2	°C/W
$R_{\theta JB}$	Junction-to-board thermal resistance	46.7	13.8	26.1	°C/W
ψ_{JT}	Junction-to-top characterization parameter	1.5	0.3	2.9	°C/W
ψ_{JB}	Junction-to-board characterization parameter	46.2	13.8	26.0	°C/W
$R_{\theta JC(bot)}$	Junction-to-case (bottom) thermal resistance	N/A	1.4	15.8	°C/W

(1) For more information about traditional and new thermal metrics, see the *Semiconductor and IC Package Thermal Metrics* application report.

5.5 Electrical Characteristics

Over recommended operating free-air temperature range (unless otherwise noted)[1] [2]

PARAMETER		TEST CONDITIONS		V_{CCA}	V_{CCB}	–40°C to 85°C			–40°C to 125°C			UNIT
						MIN	TYP[4]	MAX	MIN	TYP[4]	MAX	
V_{OH}	High-level output voltage	$V_I = V_{IH}$	I_{OH} = –100µA	0.7V - 3.6V	0.7V - 3.6V	V_{CCO} – 0.1			V_{CCO} – 0.1			V
			I_{OH} = –50µA	0.65V	0.65V	0.55			0.55			
			I_{OH} = –200µA	0.76V	0.76V	0.58			0.58			
			I_{OH} = –500µA	0.85V	0.85V	0.65			0.65			
			I_{OH} = -3mA	1.1V	1.1V	0.85			0.85			
			I_{OH} = -6mA	1.4V	1.4V	1.05			1.05			
			I_{OH} = -8mA	1.65V	1.65V	1.2			1.2			
			I_{OH} = -9mA	2.3V	2.3V	1.75			1.75			
			I_{OH} = -12mA	3V	3V	2.3			2.3			
V_{OL}	Low-level output voltage	$V_I = V_{IL}$	I_{OL} = 100µA	0.7V - 3.6V	0.7V - 3.6V			0.1			0.1	V
			I_{OL} = 50µA	0.65V	0.65V			0.1			0.1	
			I_{OL} = 200µA	0.76V	0.76V			0.18			0.18	
			I_{OL} = 500µA	0.85V	0.85V			0.2			0.2	
			I_{OL} = 3mA	1.1V	1.1V			0.25			0.25	
			I_{OL} = 6mA	1.4V	1.4V			0.35			0.35	
			I_{OL} = 8mA	1.65V	1.65V			0.45			0.45	
			I_{OL} = 9mA	2.3V	2.3V			0.55			0.55	
			I_{OL} = 12mA	3V	3V			0.7			0.7	
I_I	Input leakage current	Control Inputs (DIR, $\overline{OE}$): $V_I = V_{CCA}$ or GND		0.65V - 3.6V	0.65V - 3.6V	-0.5		0.5	-1		1	µA
I_{off}	Partial power down current	A Port: V_I or V_O = 0V - 3.6V		0V	0V - 3.6V	-8		8	-12		12	µA
		B Port: V_I or V_O = 0V - 3.6V		0V - 3.6V	0V	-8		8	-12		12	
I_{OZ} [3]	High-impedance state output current	A Port: $V_O = V_{CCO}$ or GND, $V_I = V_{CCI}$ or GND, $\overline{OE} = V_{IH}$		3.6V	3.6V	-8		8	-12		12	µA
		B Port: $V_O = V_{CCO}$ or GND, $V_I = V_{CCI}$ or GND, $\overline{OE} = V_{IH}$		3.6V	3.6V	-8		8	-12		12	
I_{CCA}	V_{CCA} supply current	$V_I = V_{CCI}$ or GND, I_O = 0mA		0.65V - 3.6V	0.65V - 3.6V			20			40	µA
				0V	3.6V	-2			-12			
				3.6V	0V			12			25	
I_{CCB}	V_{CCB} supply current	$V_I = V_{CCI}$ or GND, I_O = 0mA		0.65V - 3.6V	0.65V - 3.6V			20			40	µA
				0V	3.6V			12			25	
				3.6V	0V	-2			-12			
I_{CCA} + I_{CCB}	Combined supply current	$V_I = V_{CCI}$ or GND, I_O = 0mA		0.65V - 3.6V	0.65V - 3.6V			30			60	µA
C_i	Input capacitance	Control Inputs (DIR, $\overline{OE}$): V_I = 3.3V or GND		3.3V	3.3V		4.5			4.5		pF
C_{io}	Data I/O capacitance	Ports A and B: $\overline{OE} = V_{CCA}$, V_O = 1.65V DC + 1MHz -16dBm sine wave		3.3V	3.3V		5.7			5.7		pF

(1) V_{CCO} is the V_{CC} associated with the output port.
(2) V_{CCI} is the V_{CC} associated with the input port.
(3) For I/O ports, the parameter I_{OZ} includes the input leakage current.
(4) All typical values are for T_A = 25°C

Copyright © 2024 Texas Instruments Incorporated

5.6 Switching Characteristics, V_{CCA} = 0.7V

See Figure 6-1 and Figure 6-2 for test circuit and loading conditions. See Figure 6-3 and Figure 6-4 for measurement waveforms.

PARAMETER		TEST CONDITIONS		B-PORT SUPPLY VOLTAGE (V_{CCB})								UNIT
				0.7V ± 0.05V		0.8V ± 0.04V		0.9V ± 0.045V		1.2V ± 0.1V		
				MIN	MAX	MIN	MAX	MIN	MAX	MIN	MAX	
t_{pd}	Propagation delay	From input A to output B	–40°C to 85°C	0.5	172	0.5	114	0.5	82	0.5	49	ns
			–40°C to 125°C	0.5	172	0.5	114	0.5	82	0.5	49	
		From input B to output A	–40°C to 85°C	0.5	172	0.5	153	0.5	126	0.5	88	
			–40°C to 125°C	0.5	172	0.5	153	0.5	126	0.5	88	
t_{dis}	Disable time	From input $\overline{OE}$ to output A	–40°C to 85°C	0.5	192	0.5	192	0.5	192	0.5	192	ns
			–40°C to 125°C	0.5	195	0.5	195	0.5	195	0.5	195	
		From input $\overline{OE}$ to output B	–40°C to 85°C	0.5	156	0.5	129	0.5	118	0.5	120	
			–40°C to 125°C	0.5	157	0.5	129	0.5	120	0.5	122	
t_{en}	Enable time	From input $\overline{OE}$ to output A	–40°C to 85°C	0.5	237	0.5	237	0.5	237	0.5	237	ns
			–40°C to 125°C	0.5	237	0.5	237	0.5	237	0.5	237	
		From input $\overline{OE}$ to output B	–40°C to 85°C	0.5	223	0.5	145	0.5	106	0.5	74	
			–40°C to 125°C	0.5	223	0.5	145	0.5	106	0.5	74	

Switching Characteristics, V_{CCA} = 0.7V

PARAMETER		TEST CONDITIONS		B-PORT SUPPLY VOLTAGE (V_{CCB})								UNIT
				1.5V ± 0.1V		1.8V ± 0.15V		2.5V ± 0.2V		3.3V ± 0.3V		
				MIN	MAX	MIN	MAX	MIN	MAX	MIN	MAX	
t_{pd}	Propagation delay	From input A to output B	–40°C to 85°C	0.5	46	0.5	49	0.5	61	0.5	142	ns
			–40°C to 125°C	0.5	46	0.5	49	0.5	61	0.5	142	
		From input B to output A	–40°C to 85°C	0.5	83	0.5	82	0.5	81	0.5	81	
			–40°C to 125°C	0.5	83	0.5	82	0.5	81	0.5	81	
t_{dis}	Disable time	From input $\overline{OE}$ to output A	–40°C to 85°C	0.5	192	0.5	192	0.5	192	0.5	192	ns
			–40°C to 125°C	0.5	195	0.5	195	0.5	195	0.5	195	
		From input $\overline{OE}$ to output B	–40°C to 85°C	0.5	69	0.5	66	0.5	67	0.5	150	
			–40°C to 125°C	0.5	70	0.5	67	0.5	67	0.5	150	
t_{en}	Enable time	From input $\overline{OE}$ to output A	–40°C to 85°C	0.5	237	0.5	237	0.5	237	0.5	237	ns
			–40°C to 125°C	0.5	237	0.5	237	0.5	237	0.5	237	
		From input $\overline{OE}$ to output B	–40°C to 85°C	0.5	68	0.5	69	0.5	84	0.5	552	
			–40°C to 125°C	0.5	68	0.5	69	0.5	84	0.5	552	

Copyright © 2024 Texas Instruments Incorporated

5.7 Switching Characteristics, V_{CCA} = 0.8V

See Figure 6-1 and Figure 6-2 for test circuit and loading conditions. See Figure 6-3 and Figure 6-4 for measurement waveforms.

PARAMETER		TEST CONDITIONS		B-PORT SUPPLY VOLTAGE (V_{CCB})								UNIT
				0.7V ± 0.05V		0.8V ± 0.04V		0.9V ± 0.045V		1.2V ± 0.1V		
				MIN	MAX	MIN	MAX	MIN	MAX	MIN	MAX	
t_{pd}	Propagation delay	From input A to output B	–40°C to 85°C	0.5	153	0.5	95	0.5	62	0.5	32	ns
			–40°C to 125°C	0.5	153	0.5	95	0.5	62	0.5	32	
		From input B to output A	–40°C to 85°C	0.5	114	0.5	95	0.5	78	0.5	52	
			–40°C to 125°C	0.5	114	0.5	95	0.5	78	0.5	52	
t_{dis}	Disable time	From input $\overline{OE}$ to output A	–40°C to 85°C	0.5	101	0.5	101	0.5	101	0.5	101	ns
			–40°C to 125°C	0.5	103	0.5	103	0.5	103	0.5	103	
		From input $\overline{OE}$ to output B	–40°C to 85°C	0.5	141	0.5	114	0.5	104	0.5	106	
			–40°C to 125°C	0.5	142	0.5	115	0.5	106	0.5	109	
t_{en}	Enable time	From input $\overline{OE}$ to output A	–40°C to 85°C	0.5	102	0.5	102	0.5	102	0.5	102	ns
			–40°C to 125°C	0.5	102	0.5	102	0.5	102	0.5	102	
		From input $\overline{OE}$ to output B	–40°C to 85°C	0.5	202	0.5	124	0.5	86	0.5	52	
			–40°C to 125°C	0.5	202	0.5	124	0.5	86	0.5	52	

Switching Characteristics, V_{CCA} = 0.8V

PARAMETER		TEST CONDITIONS		B-PORT SUPPLY VOLTAGE (V_{CCB})								UNIT
				1.5V ± 0.1V		1.8V ± 0.15V		2.5V ± 0.2V		3.3V ± 0.3V		
				MIN	MAX	MIN	MAX	MIN	MAX	MIN	MAX	
t_{pd}	Propagation delay	From input A to output B	–40°C to 85°C	0.5	26	0.5	25	0.5	25	0.5	35	ns
			–40°C to 125°C	0.5	26	0.5	25	0.5	25	0.5	35	
		From input B to output A	–40°C to 85°C	0.5	42	0.5	41	0.5	40	0.5	40	
			–40°C to 125°C	0.5	42	0.5	41	0.5	40	0.5	40	
t_{dis}	Disable time	From input $\overline{OE}$ to output A	–40°C to 85°C	0.5	101	0.5	101	0.5	101	0.5	101	ns
			–40°C to 125°C	0.5	103	0.5	103	0.5	103	0.5	103	
		From input $\overline{OE}$ to output B	–40°C to 85°C	0.5	55	0.5	51	0.5	49	0.5	51	
			–40°C to 125°C	0.5	57	0.5	53	0.5	50	0.5	52	
t_{en}	Enable time	From input $\overline{OE}$ to output A	–40°C to 85°C	0.5	102	0.5	102	0.5	102	0.5	102	ns
			–40°C to 125°C	0.5	102	0.5	102	0.5	102	0.5	102	
		From input $\overline{OE}$ to output B	–40°C to 85°C	0.5	44	0.5	43	0.5	45	0.5	58	
			–40°C to 125°C	0.5	44	0.5	43	0.5	45	0.5	58	

Copyright © 2024 Texas Instruments Incorporated

5.8 Switching Characteristics, V_{CCA} = 0.9V

See Figure 6-1 and Figure 6-2 for test circuit and loading conditions. See Figure 6-3 and Figure 6-4 for measurement waveforms.

PARAMETER		TEST CONDITIONS		B-PORT SUPPLY VOLTAGE (V_{CCB})								UNIT
				0.7V ± 0.05V		0.8V ± 0.04V		0.9V ± 0.045V		1.2V ± 0.1V		
				MIN	MAX	MIN	MAX	MIN	MAX	MIN	MAX	
t_{pd}	Propagation delay	From input A to output B	–40°C to 85°C	0.5	127	0.5	78	0.5	52	0.5	23	ns
			–40°C to 125°C	0.5	127	0.5	78	0.5	52	0.5	23	
		From input B to output A	–40°C to 85°C	0.5	82	0.5	63	0.5	52	0.5	39	
			–40°C to 125°C	0.5	82	0.5	63	0.5	52	0.5	39	
t_{dis}	Disable time	From input $\overline{OE}$ to output A	–40°C to 85°C	0.5	125	0.5	125	0.5	125	0.5	125	ns
			–40°C to 125°C	0.5	128	0.5	128	0.5	128	0.5	128	
		From input $\overline{OE}$ to output B	–40°C to 85°C	0.5	131	0.5	105	0.5	96	0.5	99	
			–40°C to 125°C	0.5	133	0.5	107	0.5	98	0.5	101	
t_{en}	Enable time	From input $\overline{OE}$ to output A	–40°C to 85°C	0.5	124	0.5	124	0.5	124	0.5	124	ns
			–40°C to 125°C	0.5	128	0.5	128	0.5	128	0.5	128	
		From input $\overline{OE}$ to output B	–40°C to 85°C	0.5	191	0.5	113	0.5	75	0.5	41	
			–40°C to 125°C	0.5	191	0.5	113	0.5	75	0.5	41	

Switching Characteristics, V_{CCA} = 0.9V

PARAMETER		TEST CONDITIONS		B-PORT SUPPLY VOLTAGE (V_{CCB})								UNIT
				1.5V ± 0.1V		1.8V ± 0.15V		2.5V ± 0.2V		3.3V ± 0.3V		
				MIN	MAX	MIN	MAX	MIN	MAX	MIN	MAX	
t_{pd}	Propagation delay	From input A to output B	–40°C to 85°C	0.5	17	0.5	15	0.5	14	0.5	17	ns
			–40°C to 125°C	0.5	17	0.5	15	0.5	14	0.5	17	
		From input B to output A	–40°C to 85°C	0.5	28	0.5	24	0.5	22	0.5	22	
			–40°C to 125°C	0.5	28	0.5	24	0.5	22	0.5	22	
t_{dis}	Disable time	From input $\overline{OE}$ to output A	–40°C to 85°C	0.5	125	0.5	125	0.5	125	0.5	125	ns
			–40°C to 125°C	0.5	128	0.5	128	0.5	128	0.5	128	
		From input $\overline{OE}$ to output B	–40°C to 85°C	0.5	47	0.5	44	0.5	40	0.5	73	
			–40°C to 125°C	0.5	50	0.5	46	0.5	42	0.5	73	
t_{en}	Enable time	From input $\overline{OE}$ to output A	–40°C to 85°C	0.5	124	0.5	124	0.5	124	0.5	124	ns
			–40°C to 125°C	0.5	128	0.5	128	0.5	128	0.5	128	
		From input $\overline{OE}$ to output B	–40°C to 85°C	0.5	34	0.5	32	0.5	31	0.5	35	
			–40°C to 125°C	0.5	34	0.5	32	0.5	31	0.5	35	

Copyright © 2024 Texas Instruments Incorporated

5.9 Switching Characteristics, V_{CCA} = 1.2V

See Figure 6-1 and Figure 6-2 for test circuit and loading conditions. See Figure 6-3 and Figure 6-4 for measurement waveforms.

PARAMETER		TEST CONDITIONS		B-PORT SUPPLY VOLTAGE (V_{CCB})								UNIT
				0.7V ± 0.05V		0.8V ± 0.04V		0.9V ± 0.045V		1.2V ± 0.1V		
				MIN	MAX	MIN	MAX	MIN	MAX	MIN	MAX	
t_{pd}	Propagation delay	From input A to output B	–40°C to 85°C	0.5	88	0.5	52	0.5	39	0.5	15	ns
			–40°C to 125°C	0.5	88	0.5	52	0.5	39	0.5	15	
		From input B to output A	–40°C to 85°C	0.5	49	0.5	32	0.5	23	0.5	15	
			–40°C to 125°C	0.5	49	0.5	32	0.5	23	0.5	15	
t_{dis}	Disable time	From input $\overline{OE}$ to output A	–40°C to 85°C	0.5	87	0.5	87	0.5	87	0.5	87	ns
			–40°C to 125°C	0.5	91	0.5	91	0.5	91	0.5	91	
		From input $\overline{OE}$ to output B	–40°C to 85°C	0.5	119	0.5	94	0.5	85	0.5	89	
			–40°C to 125°C	0.5	121	0.5	96	0.5	88	0.5	93	
t_{en}	Enable time	From input $\overline{OE}$ to output A	–40°C to 85°C	0.5	34	0.5	34	0.5	34	0.5	34	ns
			–40°C to 125°C	0.5	36	0.5	36	0.5	36	0.5	36	
		From input $\overline{OE}$ to output B	–40°C to 85°C	0.5	168	0.5	98	0.5	61	0.5	29	
			–40°C to 125°C	0.5	168	0.5	98	0.5	61	0.5	30	

Switching Characteristics, V_{CCA} = 1.2V

PARAMETER		TEST CONDITIONS		B-PORT SUPPLY VOLTAGE (V_{CCB})								UNIT
				1.5V ± 0.1V		1.8V ± 0.15V		2.5V ± 0.2V		3.3V ± 0.3V		
				MIN	MAX	MIN	MAX	MIN	MAX	MIN	MAX	
t_{pd}	Propagation delay	From input A to output B	–40°C to 85°C	0.5	10	0.5	9	0.5	7	0.5	7	ns
			–40°C to 125°C	0.5	10	0.5	9	0.5	7	0.5	8	
		From input B to output A	–40°C to 85°C	0.5	13	0.5	11	0.5	8	0.5	7	
			–40°C to 125°C	0.5	13	0.5	11	0.5	8	0.5	7	
t_{dis}	Disable time	From input $\overline{OE}$ to output A	–40°C to 85°C	0.5	87	0.5	87	0.5	87	0.5	87	ns
			–40°C to 125°C	0.5	91	0.5	91	0.5	91	0.5	91	
		From input $\overline{OE}$ to output B	–40°C to 85°C	0.5	38	0.5	35	0.5	31	0.5	29	
			–40°C to 125°C	0.5	41	0.5	38	0.5	33	0.5	31	
t_{en}	Enable time	From input $\overline{OE}$ to output A	–40°C to 85°C	0.5	34	0.5	34	0.5	34	0.5	34	ns
			–40°C to 125°C	0.5	36	0.5	36	0.5	36	0.5	36	
		From input $\overline{OE}$ to output B	–40°C to 85°C	0.5	22	0.5	19	0.5	17	0.5	17	
			–40°C to 125°C	0.5	23	0.5	20	0.5	18	0.5	18	

Copyright © 2024 Texas Instruments Incorporated

5.10 Switching Characteristics, V_{CCA} = 1.5V

See Figure 6-1 and Figure 6-2 for test circuit and loading conditions. See Figure 6-3 and Figure 6-4 for measurement waveforms.

PARAMETER		TEST CONDITIONS		B-PORT SUPPLY VOLTAGE (V_{CCB})								UNIT
				0.7V ± 0.05V		0.8V ± 0.04V		0.9V ± 0.045V		1.2V ± 0.1V		
				MIN	MAX	MIN	MAX	MIN	MAX	MIN	MAX	
t_{pd}	Propagation delay	From input A to output B	–40°C to 85°C	0.5	84	0.5	42	0.5	28	0.5	13	ns
			–40°C to 125°C	0.5	84	0.5	42	0.5	28	0.5	13	
		From input B to output A	–40°C to 85°C	0.5	46	0.5	26	0.5	17	0.5	10	
			–40°C to 125°C	0.5	46	0.5	26	0.5	17	0.5	10	
t_{dis}	Disable time	From input $\overline{OE}$ to output A	–40°C to 85°C	0.5	34	0.5	34	0.5	34	0.5	34	ns
			–40°C to 125°C	0.5	37	0.5	37	0.5	37	0.5	37	
		From input $\overline{OE}$ to output B	–40°C to 85°C	0.5	115	0.5	89	0.5	80	0.5	85	
			–40°C to 125°C	0.5	117	0.5	91	0.5	83	0.5	89	
t_{en}	Enable time	From input $\overline{OE}$ to output A	–40°C to 85°C	0.5	21	0.5	21	0.5	21	0.5	21	ns
			–40°C to 125°C	0.5	23	0.5	23	0.5	23	0.5	23	
		From input $\overline{OE}$ to output B	–40°C to 85°C	0.5	159	0.5	90	0.5	55	0.5	24	
			–40°C to 125°C	0.5	159	0.5	90	0.5	55	0.5	25	

Switching Characteristics, V_{CCA} = 1.5V

PARAMETER		TEST CONDITIONS		B-PORT SUPPLY VOLTAGE (V_{CCB})								UNIT
				1.5V ± 0.1V		1.8V ± 0.15V		2.5V ± 0.2V		3.3V ± 0.3V		
				MIN	MAX	MIN	MAX	MIN	MAX	MIN	MAX	
t_{pd}	Propagation delay	From input A to output B	–40°C to 85°C	0.5	9	0.5	7	0.5	6	0.5	5	ns
			–40°C to 125°C	0.5	9	0.5	7	0.5	6	0.5	6	
		From input B to output A	–40°C to 85°C	0.5	9	0.5	7	0.5	6	0.5	5	
			–40°C to 125°C	0.5	9	0.5	8	0.5	6	0.5	5	
t_{dis}	Disable time	From input $\overline{OE}$ to output A	–40°C to 85°C	0.5	34	0.5	34	0.5	34	0.5	34	ns
			–40°C to 125°C	0.5	37	0.5	37	0.5	37	0.5	37	
		From input $\overline{OE}$ to output B	–40°C to 85°C	0.5	35	0.5	31	0.5	28	0.5	25	
			–40°C to 125°C	0.5	38	0.5	34	0.5	31	0.5	27	
t_{en}	Enable time	From input $\overline{OE}$ to output A	–40°C to 85°C	0.5	21	0.5	21	0.5	21	0.5	21	ns
			–40°C to 125°C	0.5	23	0.5	23	0.5	23	0.5	23	
		From input $\overline{OE}$ to output B	–40°C to 85°C	0.5	17	0.5	15	0.5	12	0.5	11	
			–40°C to 125°C	0.5	18	0.5	15	0.5	13	0.5	12	

Copyright © 2024 Texas Instruments Incorporated

5.11 Switching Characteristics, V_{CCA} = 1.8V

See Figure 6-1 and Figure 6-2 for test circuit and loading conditions. See Figure 6-3 and Figure 6-4 for measurement waveforms.

PARAMETER		TEST CONDITIONS		B-PORT SUPPLY VOLTAGE (V_{CCB})								UNIT
				0.7V ± 0.05V		0.8V ± 0.04V		0.9V ± 0.045V		1.2V ± 0.1V		
				MIN	MAX	MIN	MAX	MIN	MAX	MIN	MAX	
t_{pd}	Propagation delay	From input A to output B	–40°C to 85°C	0.5	82	0.5	41	0.5	24	0.5	11	ns
			–40°C to 125°C	0.5	82	0.5	41	0.5	24	0.5	11	
		From input B to output A	–40°C to 85°C	0.5	49	0.5	25	0.5	15	0.5	9	
			–40°C to 125°C	0.5	49	0.5	25	0.5	15	0.5	9	
t_{dis}	Disable time	From input $\overline{OE}$ to output A	–40°C to 85°C	0.5	37	0.5	37	0.5	37	0.5	37	ns
			–40°C to 125°C	0.5	40	0.5	40	0.5	40	0.5	40	
		From input $\overline{OE}$ to output B	–40°C to 85°C	0.5	113	0.5	87	0.5	78	0.5	83	
			–40°C to 125°C	0.5	115	0.5	89	0.5	81	0.5	87	
t_{en}	Enable time	From input $\overline{OE}$ to output A	–40°C to 85°C	0.5	17	0.5	17	0.5	17	0.5	17	ns
			–40°C to 125°C	0.5	19	0.5	19	0.5	19	0.5	19	
		From input $\overline{OE}$ to output B	–40°C to 85°C	0.5	157	0.5	88	0.5	54	0.5	23	
			–40°C to 125°C	0.5	157	0.5	88	0.5	54	0.5	23	

Switching Characteristics, V_{CCA} = 1.8V

PARAMETER		TEST CONDITIONS		B-PORT SUPPLY VOLTAGE (V_{CCB})								UNIT
				1.5V ± 0.1V		1.8V ± 0.15V		2.5V ± 0.2V		3.3V ± 0.3V		
				MIN	MAX	MIN	MAX	MIN	MAX	MIN	MAX	
t_{pd}	Propagation delay	From input A to output B	–40°C to 85°C	0.5	8	0.5	6	0.5	5	0.5	5	ns
			–40°C to 125°C	0.5	8	0.5	7	0.5	6	0.5	5	
		From input B to output A	–40°C to 85°C	0.5	7	0.5	6	0.5	5	0.5	4	
			–40°C to 125°C	0.5	7	0.5	7	0.5	5	0.5	4	
t_{dis}	Disable time	From input $\overline{OE}$ to output A	–40°C to 85°C	0.5	37	0.5	37	0.5	37	0.5	37	ns
			–40°C to 125°C	0.5	40	0.5	40	0.5	40	0.5	40	
		From input $\overline{OE}$ to output B	–40°C to 85°C	0.5	33	0.5	30	0.5	27	0.5	57	
			–40°C to 125°C	0.5	36	0.5	33	0.5	29	0.5	60	
t_{en}	Enable time	From input $\overline{OE}$ to output A	–40°C to 85°C	0.5	17	0.5	17	0.5	17	0.5	17	ns
			–40°C to 125°C	0.5	19	0.5	19	0.5	19	0.5	19	
		From input $\overline{OE}$ to output B	–40°C to 85°C	0.5	15	0.5	13	0.5	10	0.5	9	
			–40°C to 125°C	0.5	16	0.5	14	0.5	11	0.5	10	

Copyright © 2024 Texas Instruments Incorporated

5.12 Switching Characteristics, V_{CCA} = 2.5V

See Figure 6-1 and Figure 6-2 for test circuit and loading conditions. See Figure 6-3 and Figure 6-4 for measurement waveforms.

PARAMETER		TEST CONDITIONS		B-PORT SUPPLY VOLTAGE (V_{CCB})								UNIT
				0.7V ± 0.05V		0.8V ± 0.04V		0.9V ± 0.045V		1.2V ± 0.1V		
				MIN	MAX	MIN	MAX	MIN	MAX	MIN	MAX	
t_{pd}	Propagation delay	From input A to output B	–40°C to 85°C	0.5	81	0.5	40	0.5	22	0.5	8	ns
			–40°C to 125°C	0.5	81	0.5	40	0.5	22	0.5	8	
		From input B to output A	–40°C to 85°C	0.5	61	0.5	25	0.5	14	0.5	7	
			–40°C to 125°C	0.5	61	0.5	25	0.5	14	0.5	7	
t_{dis}	Disable time	From input $\overline{OE}$ to output A	–40°C to 85°C	0.5	25	0.5	25	0.5	25	0.5	25	ns
			–40°C to 125°C	0.5	28	0.5	28	0.5	28	0.5	28	
		From input $\overline{OE}$ to output B	–40°C to 85°C	0.5	111	0.5	85	0.5	76	0.5	81	
			–40°C to 125°C	0.5	113	0.5	87	0.5	78	0.5	84	
t_{en}	Enable time	From input $\overline{OE}$ to output A	–40°C to 85°C	0.5	11	0.5	11	0.5	11	0.5	11	ns
			–40°C to 125°C	0.5	12	0.5	12	0.5	12	0.5	12	
		From input $\overline{OE}$ to output B	–40°C to 85°C	0.5	155	0.5	86	0.5	52	0.5	21	
			–40°C to 125°C	0.5	155	0.5	86	0.5	52	0.5	21	

Switching Characteristics, V_{CCA} = 2.5V

PARAMETER		TEST CONDITIONS		B-PORT SUPPLY VOLTAGE (V_{CCB})								UNIT
				1.5V ± 0.1V		1.8V ± 0.15V		2.5V ± 0.2V		3.3V ± 0.3V		
				MIN	MAX	MIN	MAX	MIN	MAX	MIN	MAX	
t_{pd}	Propagation delay	From input A to output B	–40°C to 85°C	0.5	6	0.5	5	0.5	4	0.5	4	ns
			–40°C to 125°C	0.5	6	0.5	5	0.5	5	0.5	4	
		From input B to output A	–40°C to 85°C	0.5	6	0.5	5	0.5	4	0.5	4	
			–40°C to 125°C	0.5	6	0.5	5	0.5	5	0.5	4	
t_{dis}	Disable time	From input $\overline{OE}$ to output A	–40°C to 85°C	0.5	25	0.5	25	0.5	25	0.5	25	ns
			–40°C to 125°C	0.5	28	0.5	28	0.5	28	0.5	28	
		From input $\overline{OE}$ to output B	–40°C to 85°C	0.5	31	0.5	28	0.5	25	0.5	23	
			–40°C to 125°C	0.5	34	0.5	31	0.5	28	0.5	25	
t_{en}	Enable time	From input $\overline{OE}$ to output A	–40°C to 85°C	0.5	11	0.5	11	0.5	11	0.5	11	ns
			–40°C to 125°C	0.5	12	0.5	12	0.5	12	0.5	12	
		From input $\overline{OE}$ to output B	–40°C to 85°C	0.5	14	0.5	11	0.5	9	0.5	7	
			–40°C to 125°C	0.5	14	0.5	12	0.5	9	0.5	8	

Copyright © 2024 Texas Instruments Incorporated

5.13 Switching Characteristics, V_{CCA} = 3.3V

See Figure 6-1 and Figure 6-2 for test circuit and loading conditions. See Figure 6-3 and Figure 6-4 for measurement waveforms.

PARAMETER		TEST CONDITIONS		B-PORT SUPPLY VOLTAGE (V_{CCB})								UNIT
				0.7V ± 0.05V		0.8V ± 0.04V		0.9V ± 0.045V		1.2V ± 0.1V		
				MIN	MAX	MIN	MAX	MIN	MAX	MIN	MAX	
t_{pd}	Propagation delay	From input A to output B	–40°C to 85°C	0.5	81	0.5	40	0.5	22	0.5	7	ns
			–40°C to 125°C	0.5	81	0.5	40	0.5	22	0.5	7	
		From input B to output A	–40°C to 85°C	0.5	142	0.5	35	0.5	17	0.5	7	
			–40°C to 125°C	0.5	142	0.5	35	0.5	17	0.5	8	
t_{dis}	Disable time	From input $\overline{OE}$ to output A	–40°C to 85°C	0.5	22	0.5	22	0.5	22	0.5	22	ns
			–40°C to 125°C	0.5	24	0.5	24	0.5	24	0.5	24	
		From input $\overline{OE}$ to output B	–40°C to 85°C	0.5	111	0.5	84	0.5	75	0.5	80	
			–40°C to 125°C	0.5	113	0.5	86	0.5	78	0.5	83	
t_{en}	Enable time	From input $\overline{OE}$ to output A	–40°C to 85°C	0.5	9	0.5	9	0.5	9	0.5	9	ns
			–40°C to 125°C	0.5	10	0.5	10	0.5	10	0.5	10	
		From input $\overline{OE}$ to output B	–40°C to 85°C	0.5	154	0.5	86	0.5	51	0.5	20	
			–40°C to 125°C	0.5	154	0.5	86	0.5	51	0.5	20	

Switching Characteristics, V_{CCA} = 3.3V

PARAMETER		TEST CONDITIONS		B-PORT SUPPLY VOLTAGE (V_{CCB})								UNIT
				1.5V ± 0.1V		1.8V ± 0.15V		2.5V ± 0.2V		3.3V ± 0.3V		
				MIN	MAX	MIN	MAX	MIN	MAX	MIN	MAX	
t_{pd}	Propagation delay	From input A to output B	–40°C to 85°C	0.5	5	0.5	4	0.5	4	0.5	4	ns
			–40°C to 125°C	0.5	5	0.5	4	0.5	4	0.5	4	
		From input B to output A	–40°C to 85°C	0.5	5	0.5	5	0.5	4	0.5	4	
			–40°C to 125°C	0.5	6	0.5	5	0.5	4	0.5	4	
t_{dis}	Disable time	From input $\overline{OE}$ to output A	–40°C to 85°C	0.5	22	0.5	22	0.5	22	0.5	22	ns
			–40°C to 125°C	0.5	24	0.5	24	0.5	24	0.5	24	
		From input $\overline{OE}$ to output B	–40°C to 85°C	0.5	30	0.5	27	0.5	25	0.5	23	
			–40°C to 125°C	0.5	33	0.5	30	0.5	27	0.5	25	
t_{en}	Enable time	From input $\overline{OE}$ to output A	–40°C to 85°C	0.5	9	0.5	9	0.5	9	0.5	9	ns
			–40°C to 125°C	0.5	10	0.5	10	0.5	10	0.5	10	
		From input $\overline{OE}$ to output B	–40°C to 85°C	0.5	13	0.5	10	0.5	8	0.5	7	
			–40°C to 125°C	0.5	14	0.5	11	0.5	8	0.5	7	

Copyright © 2024 Texas Instruments Incorporated

5.14 Operating Characteristics: T_A = 25°C

PARAMETER		TEST CONDITIONS		MIN	TYP	MAX	UNIT
C_{pdA}	Power dissipation capacitance per transceiver (A to B: outputs enabled)	C_L = 0, R_L = Open f = 1MHz, t_r = t_f = 1 ns	V_{CCA} = V_{CCB} = 0.7V		1.2		pF
			V_{CCA} = V_{CCB} = 0.8V		1.8		
			V_{CCA} = V_{CCB} = 0.9V		1.8		
			V_{CCA} = V_{CCB} = 1.2V		1.7		
			V_{CCA} = V_{CCB} = 1.5V		1.7		
			V_{CCA} = V_{CCB} = 1.8V		1.7		
			V_{CCA} = V_{CCB} = 2.5V		2		
			V_{CCA} = V_{CCB} = 3.3V		2.5		
C_{pdA}	Power dissipation capacitance per transceiver (A to B: outputs disabled)	C_L = 0, R_L = Open f = 1MHz, t_r = t_f = 1 ns	V_{CCA} = V_{CCB} = 0.7V		1.1		pF
			V_{CCA} = V_{CCB} = 0.8V		1.8		
			V_{CCA} = V_{CCB} = 0.9V		1.8		
			V_{CCA} = V_{CCB} = 1.2V		1.7		
			V_{CCA} = V_{CCB} = 1.5V		1.7		
			V_{CCA} = V_{CCB} = 1.8V		1.7		
			V_{CCA} = V_{CCB} = 2.5V		2		
			V_{CCA} = V_{CCB} = 3.3V		2.1		
C_{pdA}	Power dissipation capacitance per transceiver (B to A: outputs enabled)	C_L = 0, R_L = Open f = 1MHz, t_r = t_f = 1 ns	V_{CCA} = V_{CCB} = 0.7V		9.3		pF
			V_{CCA} = V_{CCB} = 0.8V		11.8		
			V_{CCA} = V_{CCB} = 0.9V		11.8		
			V_{CCA} = V_{CCB} = 1.2V		12		
			V_{CCA} = V_{CCB} = 1.5V		12.2		
			V_{CCA} = V_{CCB} = 1.8V		13		
			V_{CCA} = V_{CCB} = 2.5V		16.4		
			V_{CCA} = V_{CCB} = 3.3V		18.1		
C_{pdA}	Power dissipation capacitance per transceiver (B to A: outputs disabled)	C_L = 0, R_L = Open f = 1MHz, t_r = t_f = 1 ns	V_{CCA} = V_{CCB} = 0.7V		2.6		pF
			V_{CCA} = V_{CCB} = 0.8V		1.2		
			V_{CCA} = V_{CCB} = 0.9V		1.1		
			V_{CCA} = V_{CCB} = 1.2V		1.2		
			V_{CCA} = V_{CCB} = 1.5V		1.2		
			V_{CCA} = V_{CCB} = 1.8V		1.3		
			V_{CCA} = V_{CCB} = 2.5V		1.6		
			V_{CCA} = V_{CCB} = 3.3V		3.9		

Copyright © 2024 Texas Instruments Incorporated

5.14 Operating Characteristics: T_A = 25°C (continued)

PARAMETER		TEST CONDITIONS		MIN	TYP	MAX	UNIT
C_{pdB}	Power dissipation capacitance per transceiver (A to B: outputs enabled)	C_L = 0, R_L = Open f = 1MHz, t_r = t_f = 1 ns	V_{CCA} = V_{CCB} = 0.7V		9.3		pF
			V_{CCA} = V_{CCB} = 0.8V		11.7		
			V_{CCA} = V_{CCB} = 0.9V		11.8		
			V_{CCA} = V_{CCB} = 1.2V		11.9		
			V_{CCA} = V_{CCB} = 1.5V		12.2		
			V_{CCA} = V_{CCB} = 1.8V		12.9		
			V_{CCA} = V_{CCB} = 2.5V		16.3		
			V_{CCA} = V_{CCB} = 3.3V		18		
C_{pdB}	Power dissipation capacitance per transceiver (A to B: outputs disabled)	C_L = 0, R_L = Open f = 1MHz, t_r = t_f = 1 ns	V_{CCA} = V_{CCB} = 0.7V		2.6		
			V_{CCA} = V_{CCB} = 0.8V		11.7		pF
			V_{CCA} = V_{CCB} = 0.9V		11.8		
			V_{CCA} = V_{CCB} = 1.2V		11.9		
			V_{CCA} = V_{CCB} = 1.5V		12.2		
			V_{CCA} = V_{CCB} = 1.8V		12.9		
			V_{CCA} = V_{CCB} = 2.5V		16.3		
			V_{CCA} = V_{CCB} = 3.3V		3.9		
C_{pdB}	Power dissipation capacitance per transceiver (B to A: outputs enabled)	C_L = 0, R_L = Open f = 1MHz, t_r = t_f = 1 ns	V_{CCA} = V_{CCB} = 0.7V		1.2		pF
			V_{CCA} = V_{CCB} = 0.8V		1.8		
			V_{CCA} = V_{CCB} = 0.9V		1.8		
			V_{CCA} = V_{CCB} = 1.2V		1.7		
			V_{CCA} = V_{CCB} = 1.5V		1.7		
			V_{CCA} = V_{CCB} = 1.8V		1.7		
			V_{CCA} = V_{CCB} = 2.5V		2		
			V_{CCA} = V_{CCB} = 3.3V		2.5		
C_{pdB}	Power dissipation capacitance per transceiver (B to A: outputs disabled)	C_L = 0, R_L = Open f = 1MHz, t_r = t_f = 1 ns	V_{CCA} = V_{CCB} = 0.7V		1.1		
			V_{CCA} = V_{CCB} = 0.8V		1.8		pF
			V_{CCA} = V_{CCB} = 0.9V		1.8		
			V_{CCA} = V_{CCB} = 1.2V		1.7		
			V_{CCA} = V_{CCB} = 1.5V		1.7		
			V_{CCA} = V_{CCB} = 1.8V		1.7		
			V_{CCA} = V_{CCB} = 2.5V		2		
			V_{CCA} = V_{CCB} = 3.3V		2.1		

Copyright © 2024 Texas Instruments Incorporated

5.15 Typical Characteristics

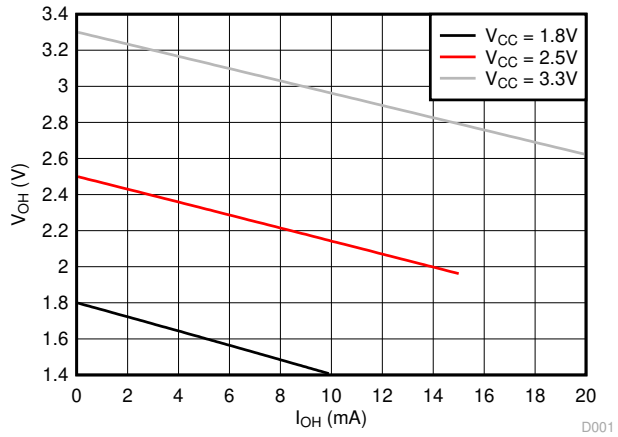

Figure 5-1. Typical (T_A=25°C) Output High Voltage (V_{OH}) vs Source Current (I_{OH})

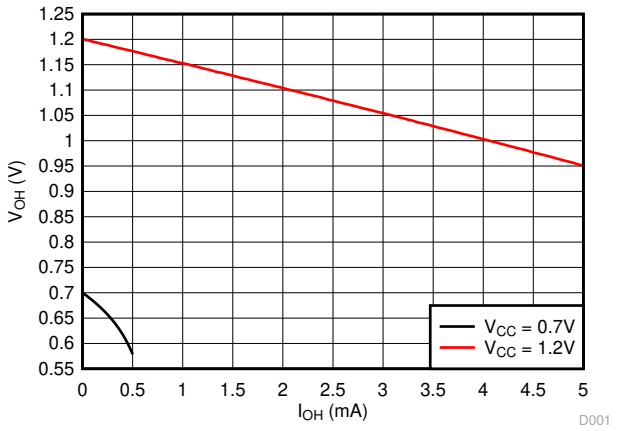

Figure 5-2. Typical (T_A=25°C) Output High Voltage (V_{OH}) vs Source Current (I_{OH})

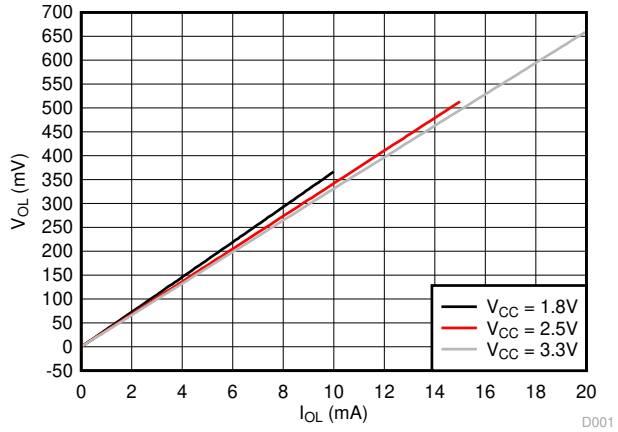

Figure 5-3. Typical (T_A=25°C) Output High Voltage (V_{OL}) vs Sink Current (I_{OL})

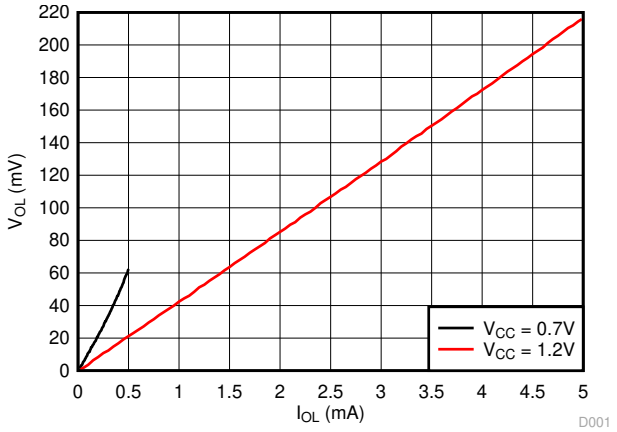

Figure 5-4. Typical (T_A=25°C) Output High Voltage (V_{OL}) vs Sink Current (I_{OL})

6 Parameter Measurement Information

Unless otherwise noted, all input pulses are supplied by generators having the following characteristics:

- f =1MHz
- Z_0 = 50 Ω
- dv / dt ≤ 1 ns/V

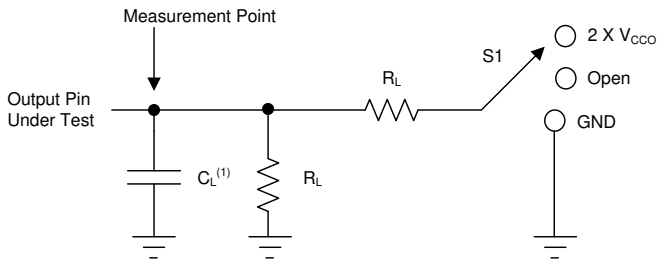

A. C_L includes probe and jig capacitance.

Figure 6-1. Load Circuit

Parameter	V_{CCO}	R_L	C_L	S1	V_{TP}
t_{pd}	1.1 V - 3.6 V	2 kΩ	15 pF	Open	N/A
	0.65 V - 0.95 V	20 kΩ	15 pF	Open	N/A
t_{en}(1), t_{dis}(1)	3 V - 3.6 V	2 kΩ	15 pF	2 X V_{CCO}	0.3 V
	1.65 V - 2.7 V	2 kΩ	15 pF	2 X V_{CCO}	0.15 V
	1.1 V - 1.6 V	2 kΩ	15 pF	2 X V_{CCO}	0.1 V
	0.65 V - 0.95 V	20 kΩ	15 pF	2 X V_{CCO}	0.1 V
t_{en}(2), t_{dis}(2)	3 V - 3.6 V	2 kΩ	15 pF	GND	0.3 V
	1.65V - 2.7 V	2 kΩ	15 pF	GND	0.15 V
	1.1 V - 1.6 V	2 kΩ	15 pF	GND	0.1 V
	0.65 V - 0.95 V	20 kΩ	15 pF	GND	0.1 V

A. Output waveform on the conditions that input is driven to a valid Logic Low.
B. Output waveform on the condition that input is driven to a valid Logic High.

Figure 6-2. Load Circuit Conditions

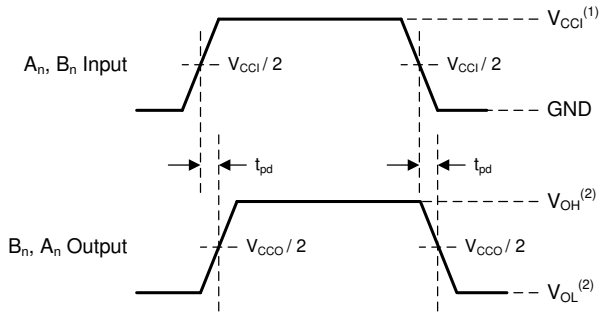

A. V_{CCI} is the supply pin associated with the input port.
B. V_{OH} and V_{OL} are typical output voltage levels with specified R_L, C_L, and S_1.

Figure 6-3. Propagation Delay

Copyright © 2024 Texas Instruments Incorporated

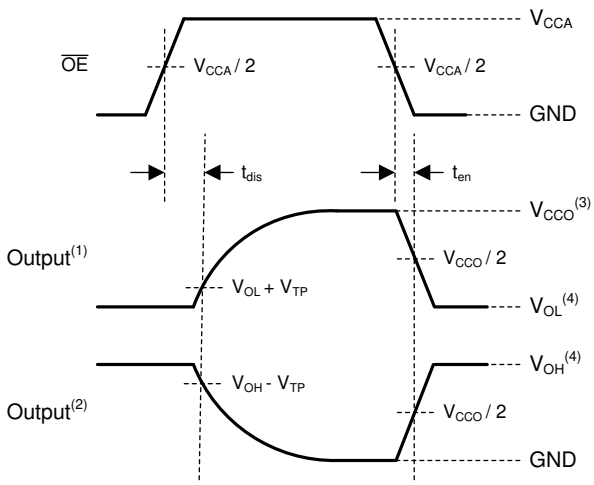

A. Output waveform on the condition that input is driven to a valid Logic Low.
B. Output waveform on the condition that input is driven to a valid Logic High.
C. V_{CCO} is the supply pin associated with the output port.
D. V_{OH} and V_{OL} are typical output voltage levels with specified R_L, C_L, and S_1.

Figure 6-4. Enable Time And Disable Time

7 Detailed Description

7.1 Overview

The SN74AXC8T245-Q1 device is an 8-bit, dual-supply non-inverting transceiver with bidirectional voltage level translation. The I/O pins labeled with A and the control pins (DIR1, DIR2, and $\overline{OE}$) are supported by V_{CCA}, and the I/O pins labeled with B are supported by V_{CCB}. The A port and the B port are able to accept I/O voltages ranging from 0.65V to 3.6V.

7.2 Functional Block Diagram

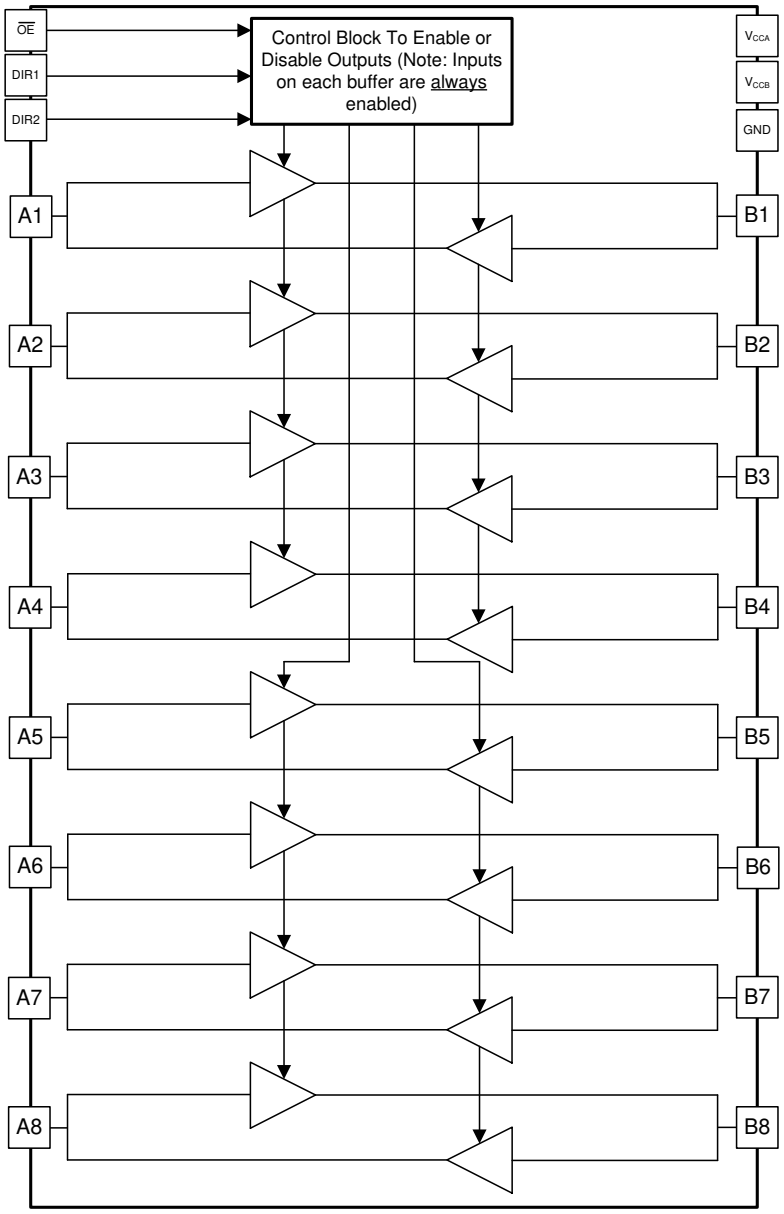

Copyright © 2024 Texas Instruments Incorporated

7.3 Feature Description

7.3.1 Up-Translation and Down-Translation From 0.65V to 3.6V

Both supply pins are configured from 0.65V to 3.6V, which makes the device suitable for translating between any of the low voltage nodes (0.7V, 0.8V, 0.9V, 1.2V, 1.8V, 2.5V, and 3.3V).

7.3.2 Multiple Direction Control Pins

Two control pins are used to configure the 8 data I/Os. I/O channels 1 through 4 are grouped together and I/O channels 5 through 8 are banked together. The benefit of this is to permit simultaneous up-translation and down-translation within one device. This eliminates the need for multiple devices, where each device can only provide up-translation or down-translation sequentially. Simultaneous up and down translation is supported when both V_{CCA} and V_{CCB} are at least 1.40V.

7.3.3 I_{off} Supports Partial-Power-Down Mode Operation

This feature is to limit the leakage current of an I/O pin being driven to a voltage as large as 3.6V while having its corresponding power supply rail powered down. This is represented by the I_{off} parameter in the *Electrical Characteristics* table.

7.3.4 Wettable Flanks

This device includes wettable flanks for at least one package. See the *Features* section on the front page of the data sheet for which packages include this feature.

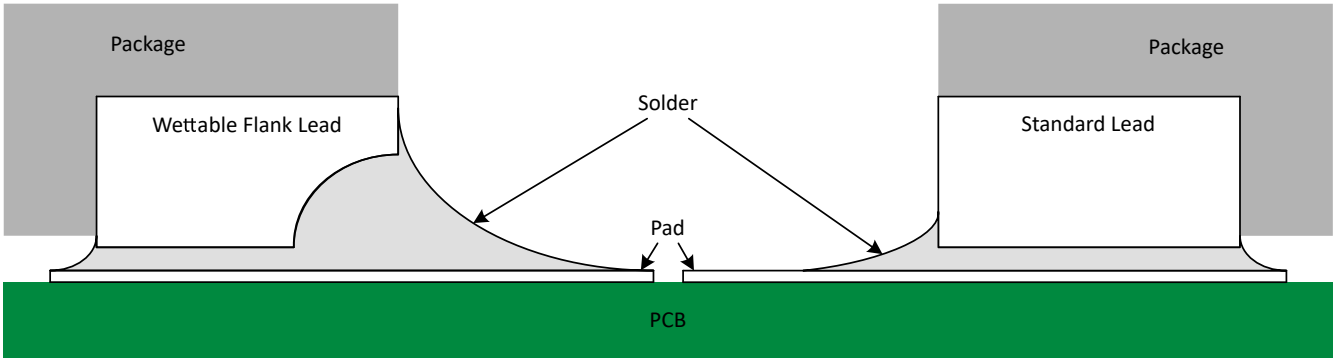

Figure 7-1. Simplified Cutaway View of Wettable-Flank QFN Package and Standard QFN Package After Soldering

Wettable flanks help improve side wetting after soldering, which makes QFN packages easier to inspect with automatic optical inspection (AOI). As shown in Figure 7-1, a wettable flank can be dimpled or step-cut to provide additional surface area for solder adhesion which assists in reliably creating a side fillet. See the mechanical drawing for additional details.

7.3.5 I/Os with Integrated Static Pull-Down Resistors

To help avoid floating inputs on the I/Os, this device has 288kΩ typical integrated weak pull-downs on all data I/Os. This feature allows all inputs to be left floating without the concern for unstable outputs or increased current consumption. This also helps to reduce external component count for applications where not all channels are used or need to be fixed low. If an external pull-up is required, it should be no larger than 30kΩ to avoid contention with the 288kΩ internal pull-down.

7.4 Device Functional Modes

All control inputs are referenced to V_{CCA} and must be driven to a valid Logic High or Logic Low (that is, not floating) to assure proper device operation and to prevent excessive power consumption. Table 7-1 summarizes the possible modes of device operation based on the configuration of the control inputs.

Table 7-1. Function Table

CONTROL INPUTS[1]			Signal Direction	
$\overline{OE}$	DIR1	DIR2	Bits 1:4	Bits 5:8
H	X	X	Disabled (Hi-Z)	
L	L	L	B to A	
L	L	H	B to A	A to B
L	H	L	A to B	
L	H	H	A to B	B to A

(1) Input circuits of the data I/Os are always active and must be driven to a valid logic level.

Copyright © 2024 Texas Instruments Incorporated

8 Application and Implementation

Note

Information in the following applications sections is not part of the TI component specification, and TI does not warrant its accuracy or completeness. TI's customers are responsible for determining suitability of components for their purposes, as well as validating and testing their design implementation to confirm system functionality.

8.1 Application Information

The SN74AXC8T245-Q1 AEC-Q100 qualified SN74AXC8T245-Q1-Q1 device can be used in level-translation applications for interfacing devices or systems operating at different voltage nodes. Figure 9-1 depicts an application in which the SN74AXC8T245-Q1 device is up-translating a 0.7V input to a 3.3V output to interface between a system controller and a peripheral device.

8.2 Typical Application

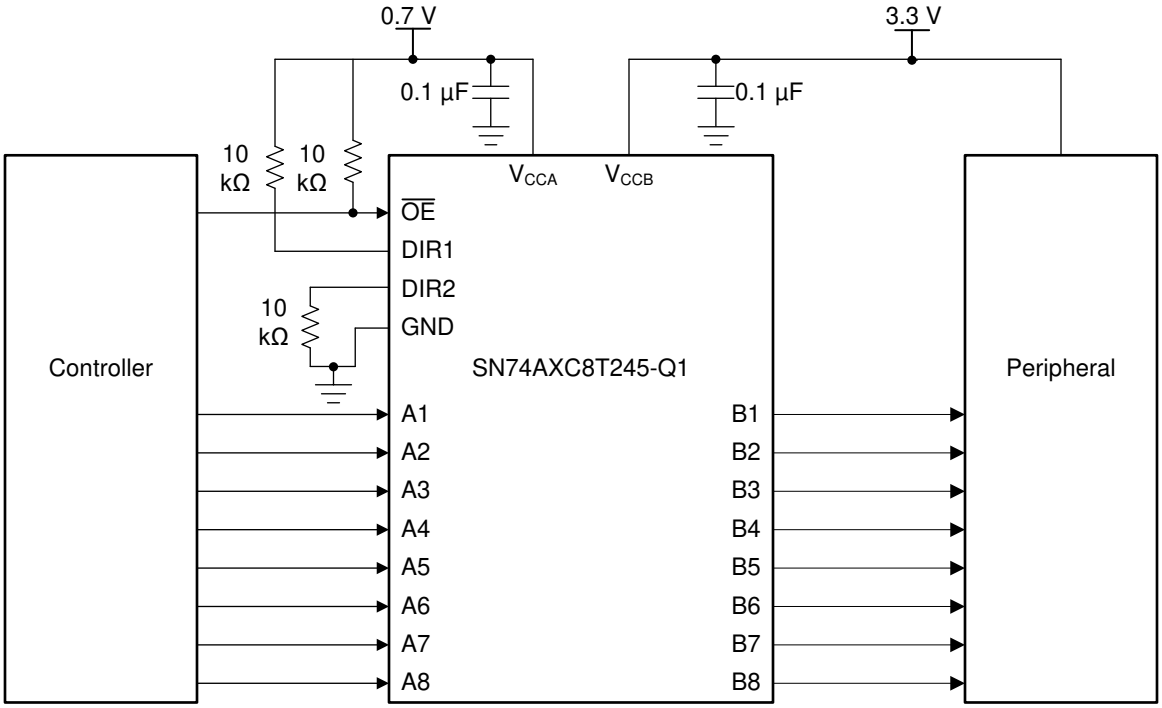

Figure 8-1. Typical Application Schematic

8.2.1 Design Requirements

For this design example, use the parameters listed in Table 8-1.

Table 8-1. Design Parameters

DESIGN PARAMETERS	EXAMPLE VALUE
Input voltage range	0.65V to 3.6V
Output voltage range	0.65V to 3.6V

8.2.2 Detailed Design Procedure

To begin the design process, determine the following:

- Input voltage range
  - Use the supply voltage of the device that is driving the SN74AXC8T245-Q1 device to determine the input voltage range. For a valid logic high the value must exceed the V_{IH} of the input port. For a valid logic low the value must be less than the V_{IL} of the input port.
- Output voltage range
  - Use the supply voltage of the device that the SN74AXC8T245-Q1 device is driving to determine the output voltage range.

8.2.3 Application Curve

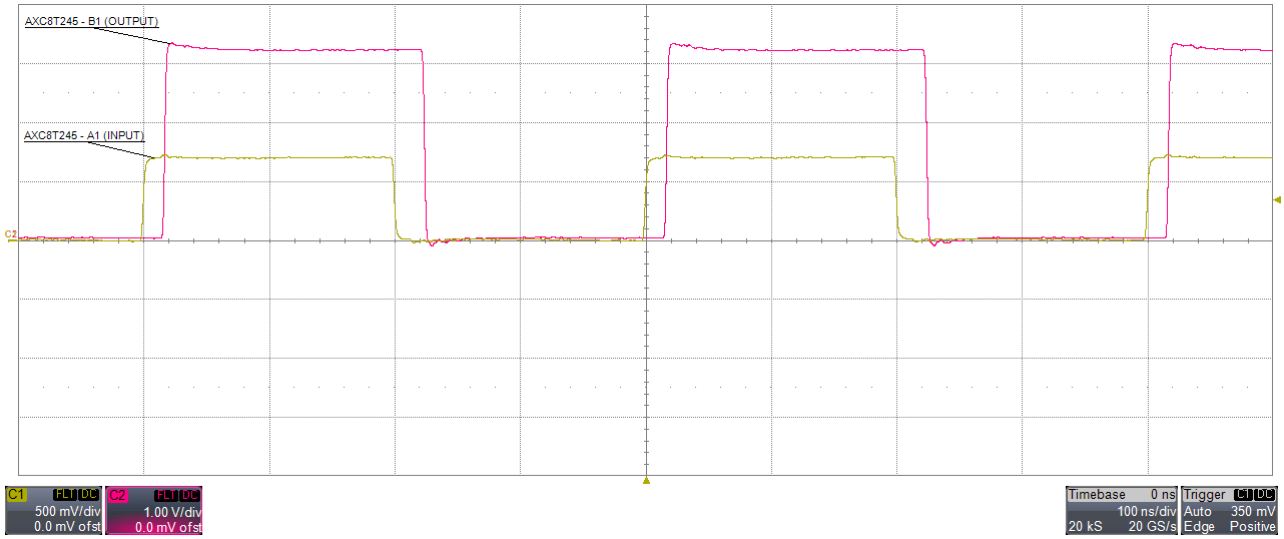

Figure 8-2. Translation Up (0.7V to 3.3V) at 2.5MHz

Copyright © 2024 Texas Instruments Incorporated

8.3 Power Supply Recommendations

Always apply a ground reference to the GND pins first. There are no additional requirements for power supply sequencing.

This device was designed with various power supply sequencing methods in mind to help prevent unintended triggering of downstream devices. For more information regarding the power up glitch performance of the AXC family of level translators, see the *Power Sequencing for AXC Family of Devices* application report.

8.4 Layout

8.4.1 Layout Guidelines

For device reliability, follow common printed-circuit board layout guidelines.

- Use bypass capacitors on power supplies.
- Use short trace lengths to avoid excessive loading.
- Place pads on the signal paths for loading capacitors or pullup resistors to help adjust rise and fall times of signals depending on the system requirements.

8.4.2 Layout Example

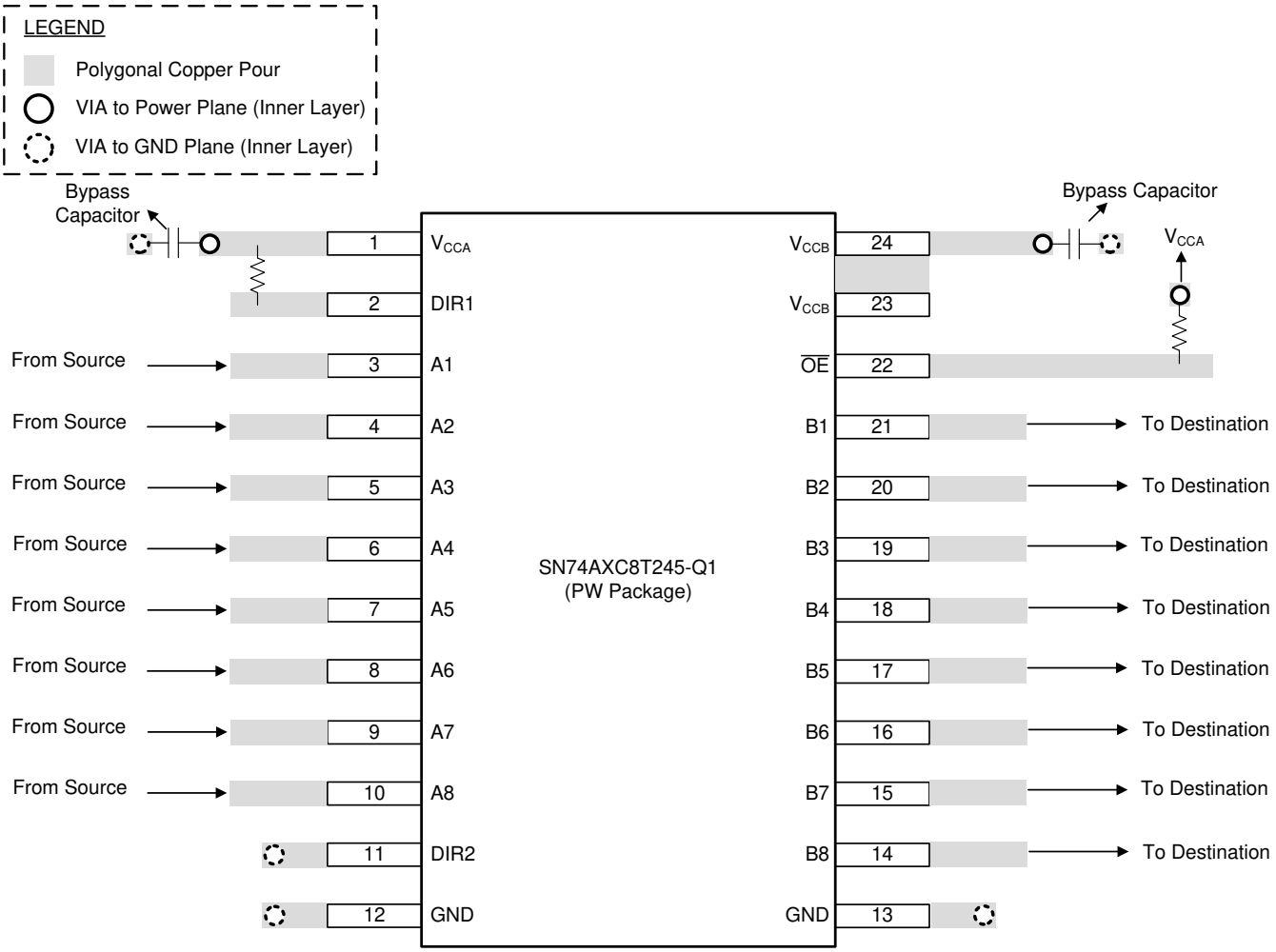

Figure 8-3. SN74AXC8T245-Q1-Q1 Device Layout Example

9 Device and Documentation Support

9.1 Documentation Support

9.1.1 Related Documentation

For related documentation, see the following:

- Texas Instruments, *SN74AXC8245-Q1 Evaluation Module* user's guide
- Texas Instruments, *Implications of Slow or Floating CMOS Inputs* application report
- Texas Instruments, *Power Sequencing for AXC Family of Devices* application report

9.2 Receiving Notification of Documentation Updates

To receive notification of documentation updates, navigate to the device product folder on ti.com. Click on *Notifications* to register and receive a weekly digest of any product information that has changed. For change details, review the revision history included in any revised document.

9.3 Support Resources

TI E2E™ support forums are an engineer's go-to source for fast, verified answers and design help — straight from the experts. Search existing answers or ask your own question to get the quick design help you need.

Linked content is provided "AS IS" by the respective contributors. They do not constitute TI specifications and do not necessarily reflect TI's views; see TI's Terms of Use.

9.4 Trademarks

TI E2E™ is a trademark of Texas Instruments.
All trademarks are the property of their respective owners.

9.5 Electrostatic Discharge Caution

This integrated circuit can be damaged by ESD. Texas Instruments recommends that all integrated circuits be handled with appropriate precautions. Failure to observe proper handling and installation procedures can cause damage.

ESD damage can range from subtle performance degradation to complete device failure. Precision integrated circuits may be more susceptible to damage because very small parametric changes could cause the device not to meet its published specifications.

9.6 Glossary

TI Glossary	This glossary lists and explains terms, acronyms, and definitions.

10 Revision History

NOTE: Page numbers for previous revisions may differ from page numbers in the current version.

Changes from Revision C (October 2021) to Revision D (January 2024)	Page
• Added the I_{off} *Supports Partial-Power-Down Mode Operation* section	21

Changes from Revision B (May 2021) to Revision C (October 2021)	Page
• Reformatted the *Device Information* table	1
• Added wettable flank information in *Features*	1
• Added wettable flank information in *Feature Description*	21

Changes from Revision A (July 2019) to Revision B (May 2021)	Page
• Added the SN74AXC8T245-Q1QRGYQ1 part number to the *Device Information* table	1
• Updated the numbering format for tables, figures, and cross-references throughout the document	1
• Added the *RGY Package,* to the *Pin Configuration and Functions* section	2

Copyright © 2024 Texas Instruments Incorporated

- Added the *RGY Package* to the *Thermal Information* section.....5

Changes from Revision * (November 2018) to Revision A (July 2019)	Page
• Changed status to production data	1
• Added Typical Characteristics graphs for Production Data release.	17

11 Mechanical, Packaging, and Orderable Information

The following pages include mechanical, packaging, and orderable information. This information is the most current data available for the designated devices. This data is subject to change without notice and revision of this document. For browser-based versions of this data sheet, refer to the left-hand navigation.

PACKAGING INFORMATION

Orderable part number	Status (1)	Material type (2)	Package | Pins	Package qty | Carrier	RoHS (3)	Lead finish/ Ball material (4)	MSL rating/ Peak reflow (5)	Op temp (°C)	Part marking (6)
CAXC8T245QRHLRQ1	Active	Production	VQFN (RHL) | 24	1000 | LARGE T&R	Yes	NIPDAU	Level-1-260C-UNLIM	-40 to 125	AX8T245Q
CAXC8T245QRHLRQ1.B	Active	Production	VQFN (RHL) | 24	1000 | LARGE T&R	Yes	NIPDAU	Level-1-260C-UNLIM	-40 to 125	AX8T245Q
CAXC8T245QWRGYRQ1	Active	Production	VQFN (RGY) | 24	3000 | LARGE T&R	Yes	NIPDAU	Level-2-260C-1 YEAR	-40 to 125	AX8T245Q
CAXC8T245QWRGYRQ1.B	Active	Production	VQFN (RGY) | 24	3000 | LARGE T&R	Yes	NIPDAU	Level-2-260C-1 YEAR	-40 to 125	AX8T245Q
SN74AXC8T245QPWRQ1	Active	Production	TSSOP (PW) | 24	2000 | LARGE T&R	Yes	NIPDAU	Level-1-260C-UNLIM	-40 to 125	AX8T245Q
SN74AXC8T245QPWRQ1.B	Active	Production	TSSOP (PW) | 24	2000 | LARGE T&R	Yes	NIPDAU	Level-1-260C-UNLIM	-40 to 125	AX8T245Q

(1) **Status:** For more details on status, see our product life cycle.

(2) **Material type:** When designated, preproduction parts are prototypes/experimental devices, and are not yet approved or released for full production. Testing and final process, including without limitation quality assurance, reliability performance testing, and/or process qualification, may not yet be complete, and this item is subject to further changes or possible discontinuation. If available for ordering, purchases will be subject to an additional waiver at checkout, and are intended for early internal evaluation purposes only. These items are sold without warranties of any kind.

(3) **RoHS values:** Yes, No, RoHS Exempt. See the TI RoHS Statement for additional information and value definition.

(4) **Lead finish/Ball material:** Parts may have multiple material finish options. Finish options are separated by a vertical ruled line. Lead finish/Ball material values may wrap to two lines if the finish value exceeds the maximum column width.

(5) **MSL rating/Peak reflow:** The moisture sensitivity level ratings and peak solder (reflow) temperatures. In the event that a part has multiple moisture sensitivity ratings, only the lowest level per JEDEC standards is shown. Refer to the shipping label for the actual reflow temperature that will be used to mount the part to the printed circuit board.

(6) **Part marking:** There may be an additional marking, which relates to the logo, the lot trace code information, or the environmental category of the part.

Multiple part markings will be inside parentheses. Only one part marking contained in parentheses and separated by a "~" will appear on a part. If a line is indented then it is a continuation of the previous line and the two combined represent the entire part marking for that device.

Important Information and Disclaimer: The information provided on this page represents TI's knowledge and belief as of the date that it is provided. TI bases its knowledge and belief on information provided by third parties, and makes no representation or warranty as to the accuracy of such information. Efforts are underway to better integrate information from third parties. TI has taken and continues to take reasonable steps to provide representative and accurate information but may not have conducted destructive testing or chemical analysis on incoming materials and chemicals. TI and TI suppliers consider certain information to be proprietary, and thus CAS numbers and other limited information may not be available for release.

In no event shall TI's liability arising out of such information exceed the total purchase price of the TI part(s) at issue in this document sold by TI to Customer on an annual basis.

OTHER QUALIFIED VERSIONS OF SN74AXC8T245-Q1 :

- Catalog : SN74AXC8T245

NOTE: Qualified Version Definitions:

- Catalog - TI's standard catalog product

TAPE AND REEL INFORMATION

REEL DIMENSIONS

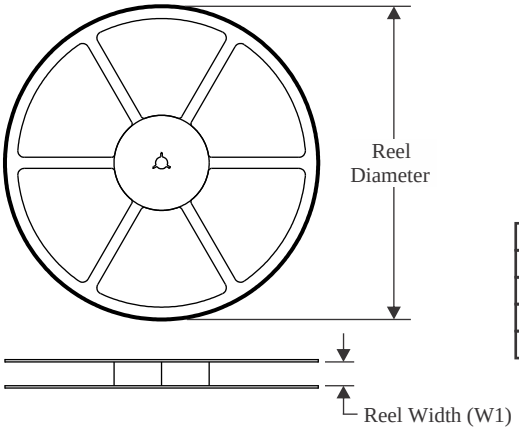

TAPE DIMENSIONS

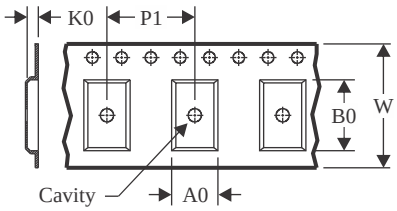

A0	Dimension designed to accommodate the component width
B0	Dimension designed to accommodate the component length
K0	Dimension designed to accommodate the component thickness
W	Overall width of the carrier tape
P1	Pitch between successive cavity centers

QUADRANT ASSIGNMENTS FOR PIN 1 ORIENTATION IN TAPE

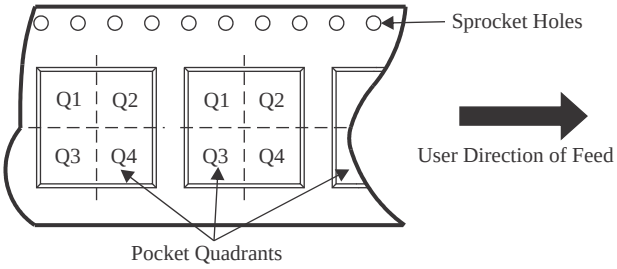

*All dimensions are nominal

Device	Package Type	Package Drawing	Pins	SPQ	Reel Diameter (mm)	Reel Width W1 (mm)	A0 (mm)	B0 (mm)	K0 (mm)	P1 (mm)	W (mm)	Pin1 Quadrant
CAXC8T245QRHLRQ1	VQFN	RHL	24	1000	330.0	12.4	3.8	5.8	1.2	8.0	12.0	Q1
CAXC8T245QWRGYRQ1	VQFN	RGY	24	3000	330.0	12.4	3.8	5.8	1.2	8.0	12.0	Q1
SN74AXC8T245QPWRQ1	TSSOP	PW	24	2000	330.0	16.4	6.95	8.3	1.6	8.0	16.0	Q1

TAPE AND REEL BOX DIMENSIONS

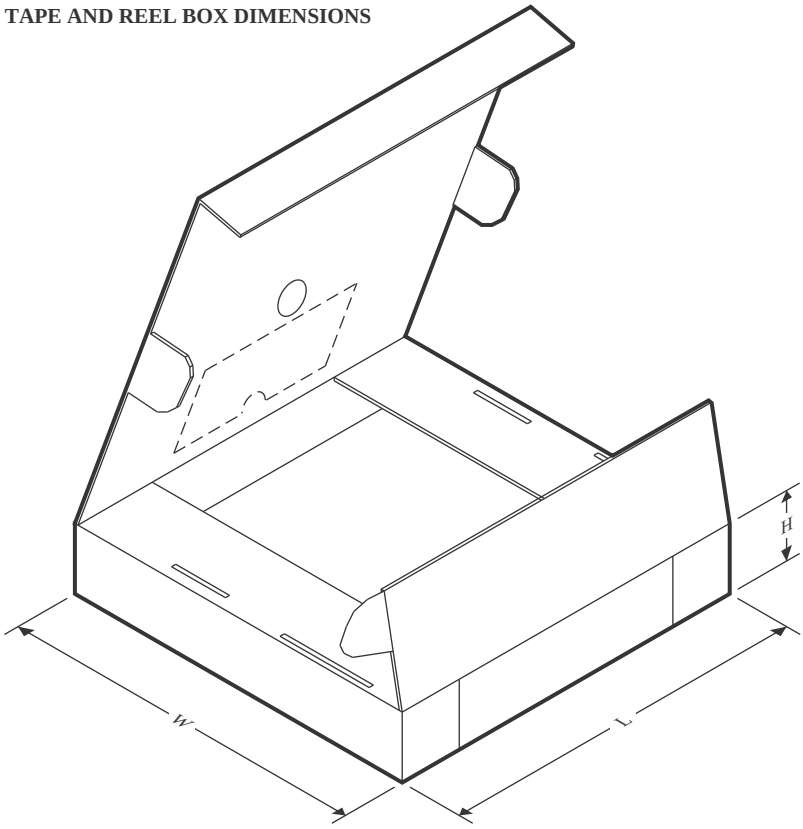

*All dimensions are nominal

Device	Package Type	Package Drawing	Pins	SPQ	Length (mm)	Width (mm)	Height (mm)
CAXC8T245QRHLRQ1	VQFN	RHL	24	1000	367.0	367.0	35.0
CAXC8T245QWRGYRQ1	VQFN	RGY	24	3000	367.0	367.0	35.0
SN74AXC8T245QPWRQ1	TSSOP	PW	24	2000	356.0	356.0	35.0

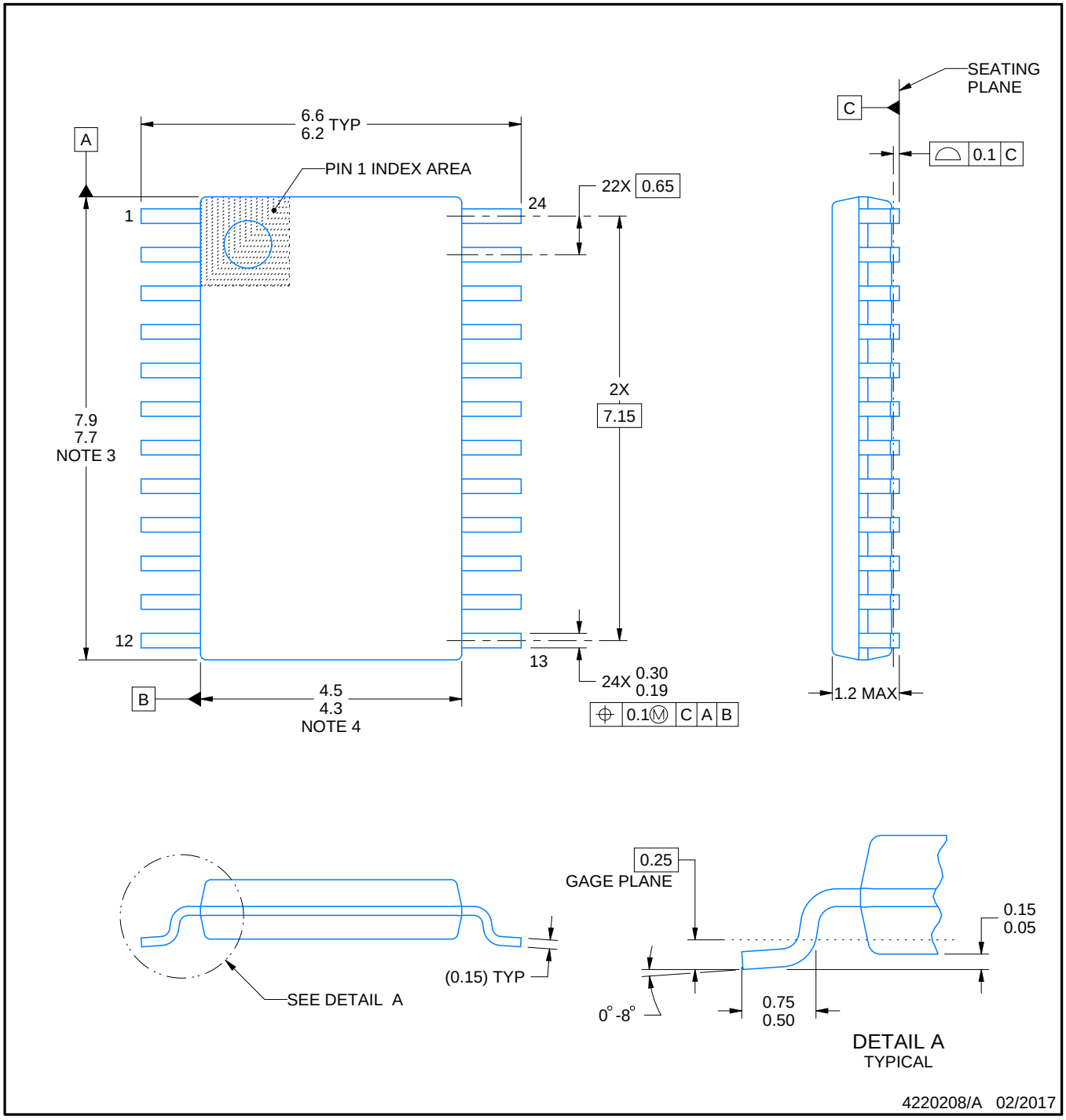

NOTES:

1. All linear dimensions are in millimeters. Any dimensions in parenthesis are for reference only. Dimensioning and tolerancing per ASME Y14.5M.
2. This drawing is subject to change without notice.
3. This dimension does not include mold flash, protrusions, or gate burrs. Mold flash, protrusions, or gate burrs shall not exceed 0.15 mm per side.
4. This dimension does not include interlead flash. Interlead flash shall not exceed 0.25 mm per side.
5. Reference JEDEC registration MO-153.

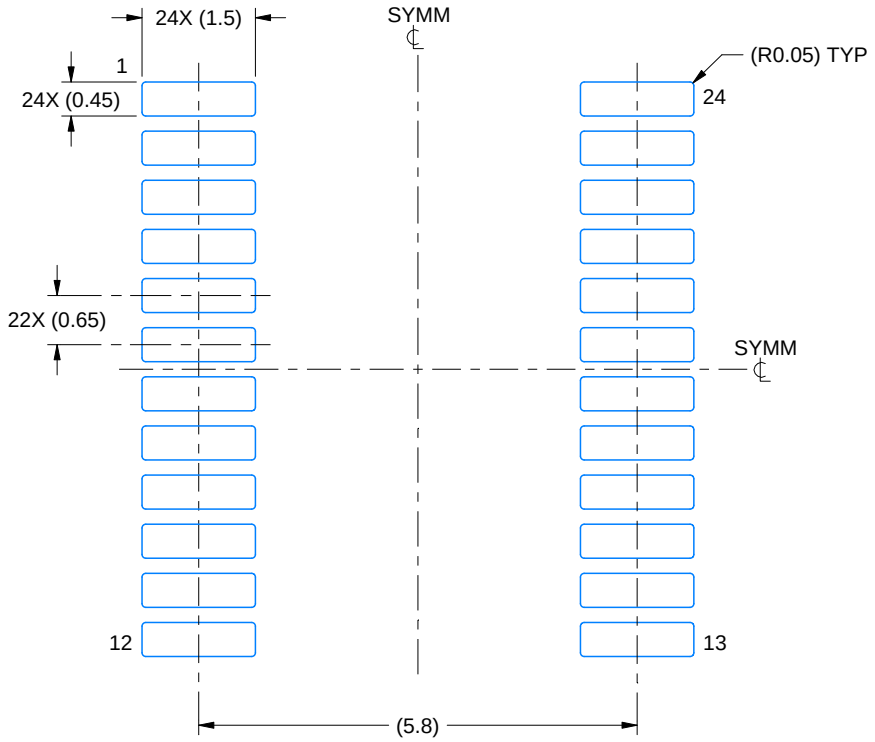

LAND PATTERN EXAMPLE
EXPOSED METAL SHOWN
SCALE: 10X

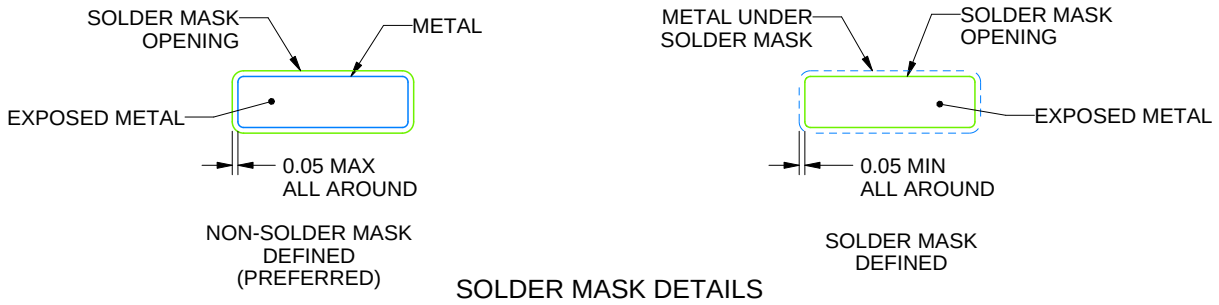

SOLDER MASK DETAILS

4220208/A 02/2017

NOTES: (continued)

6. Publication IPC-7351 may have alternate designs.
7. Solder mask tolerances between and around signal pads can vary based on board fabrication site.

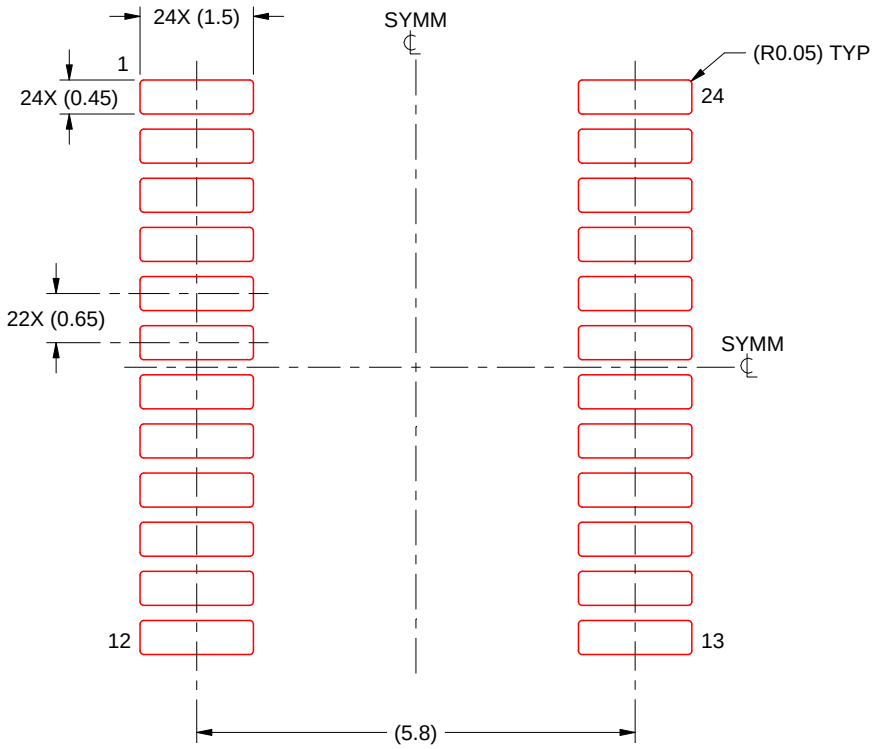

SOLDER PASTE EXAMPLE
BASED ON 0.125 mm THICK STENCIL
SCALE: 10X

4220208/A 02/2017

NOTES: (continued)

8. Laser cutting apertures with trapezoidal walls and rounded corners may offer better paste release. IPC-7525 may have alternate design recommendations.
9. Board assembly site may have different recommendations for stencil design.

RGY 24

VQFN - 1 mm max height

5.5 x 3.5 mm, 0.5 mm pitch

PLASTIC QUAD FLATPACK - NO LEAD

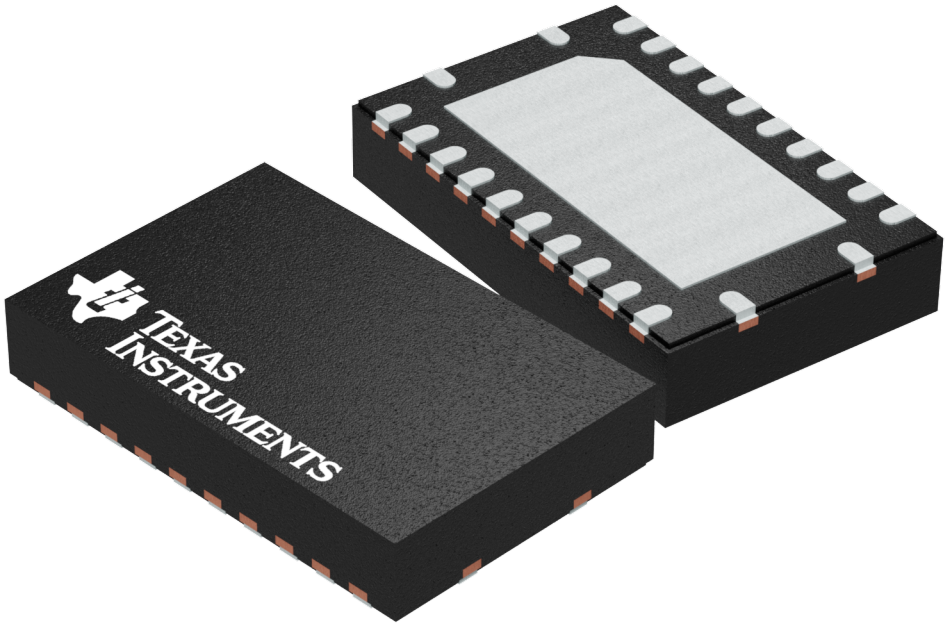

Images above are just a representation of the package family, actual package may vary.
Refer to the product data sheet for package details.

TEXAS INSTRUMENTS

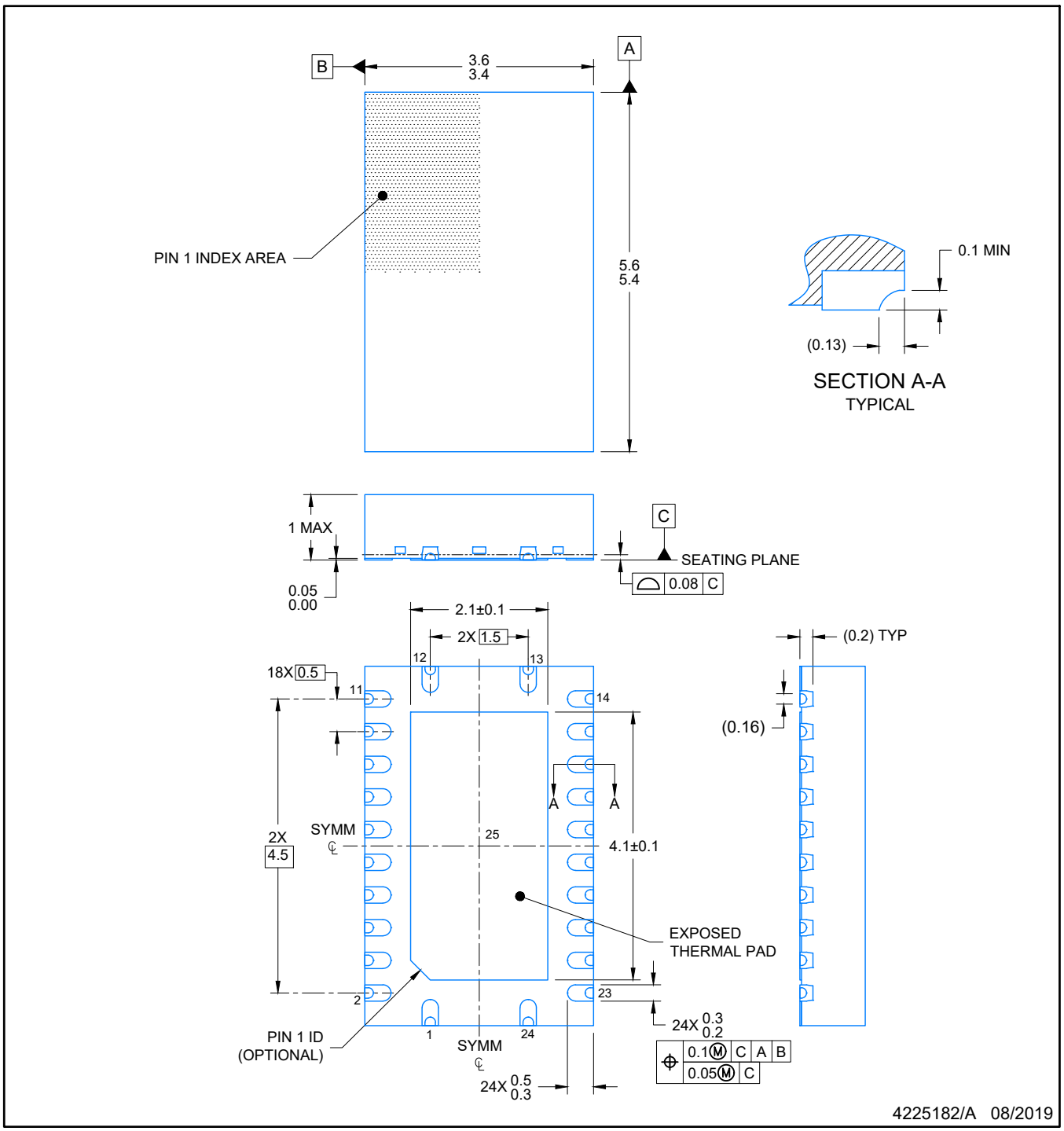

NOTES:

1. All linear dimensions are in millimeters. Any dimensions in parenthesis are for reference only. Dimensioning and tolerancing per ASME Y14.5M.
2. This drawing is subject to change without notice.
3. The package thermal pad must be soldered to the printed circuit board for optimal thermal and mechanical performance.

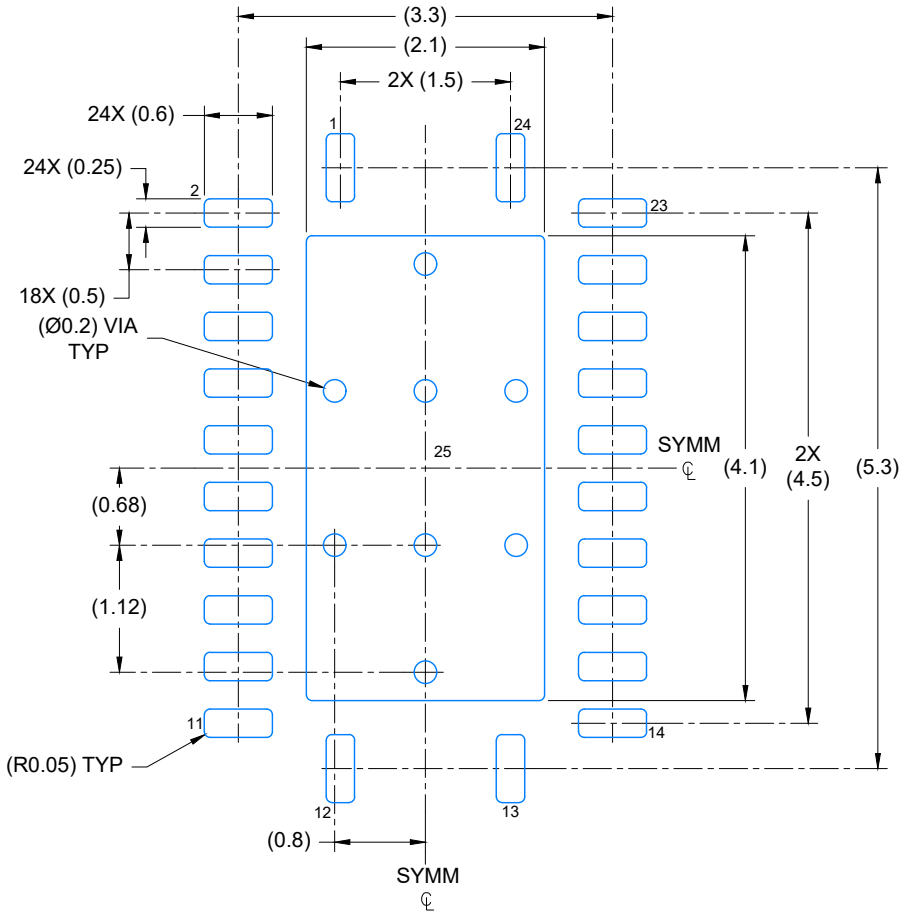

LAND PATTERN EXAMPLE
EXPOSED METAL SHOWN
SCALE: 15X

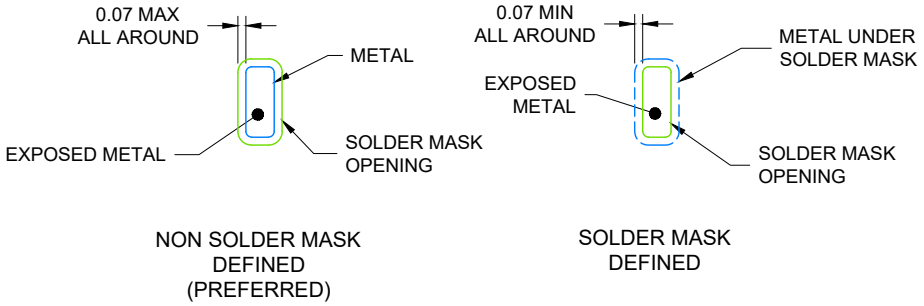

NON SOLDER MASK DEFINED (PREFERRED)

SOLDER MASK DEFINED

SOLDER MASK DETAILS

4225182/A 08/2019

NOTES: (continued)

4. This package is designed to be soldered to a thermal pad on the board. For more information, see Texas Instruments literature number SLUA271 (www.ti.com/lit/slua271).
5. Vias are optional depending on application, refer to device data sheet. If any vias are implemented, refer to their locations shown on this view. It is recommended that vias under paste be filled, plugged or tented.

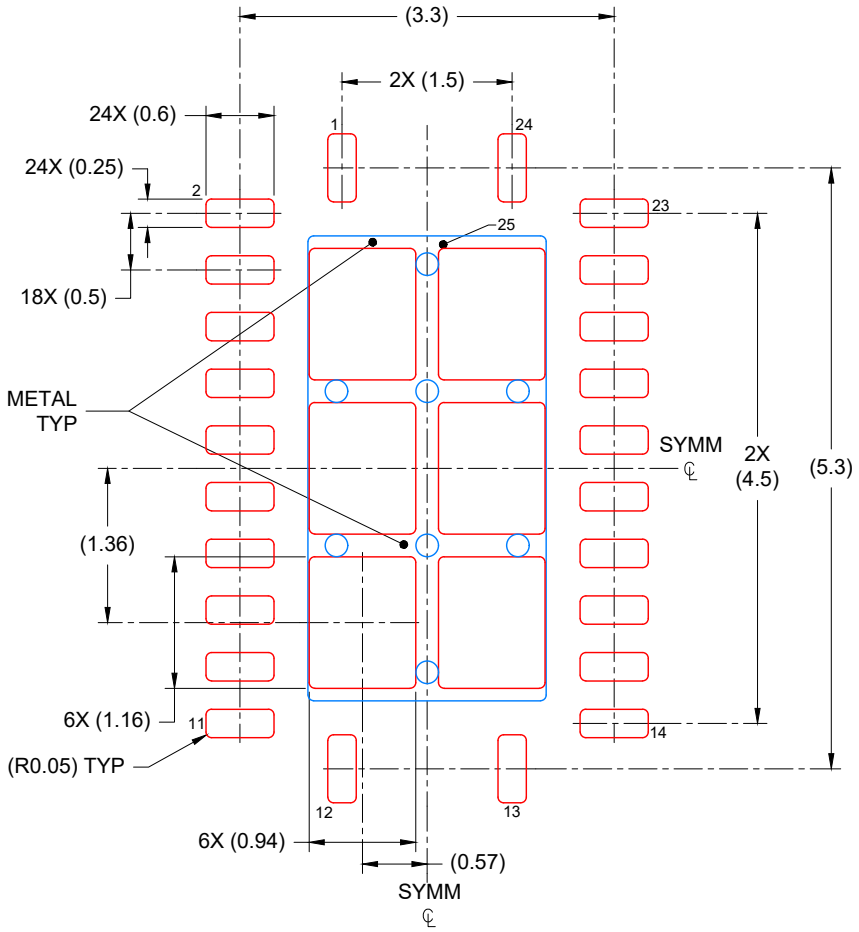

SOLDER PASTE EXAMPLE
BASED ON 0.125 mm THICK STENCIL

EXPOSED PAD
76% PRINTED COVERAGE BY AREA
SCALE: 15X

4225182/A 08/2019

NOTES: (continued)

6. Laser cutting apertures with trapezoidal walls and rounded corners may offer better paste release. IPC-7525 may have alternate design recommendations.

PLASTIC QUAD FLATPACK- NO LEAD

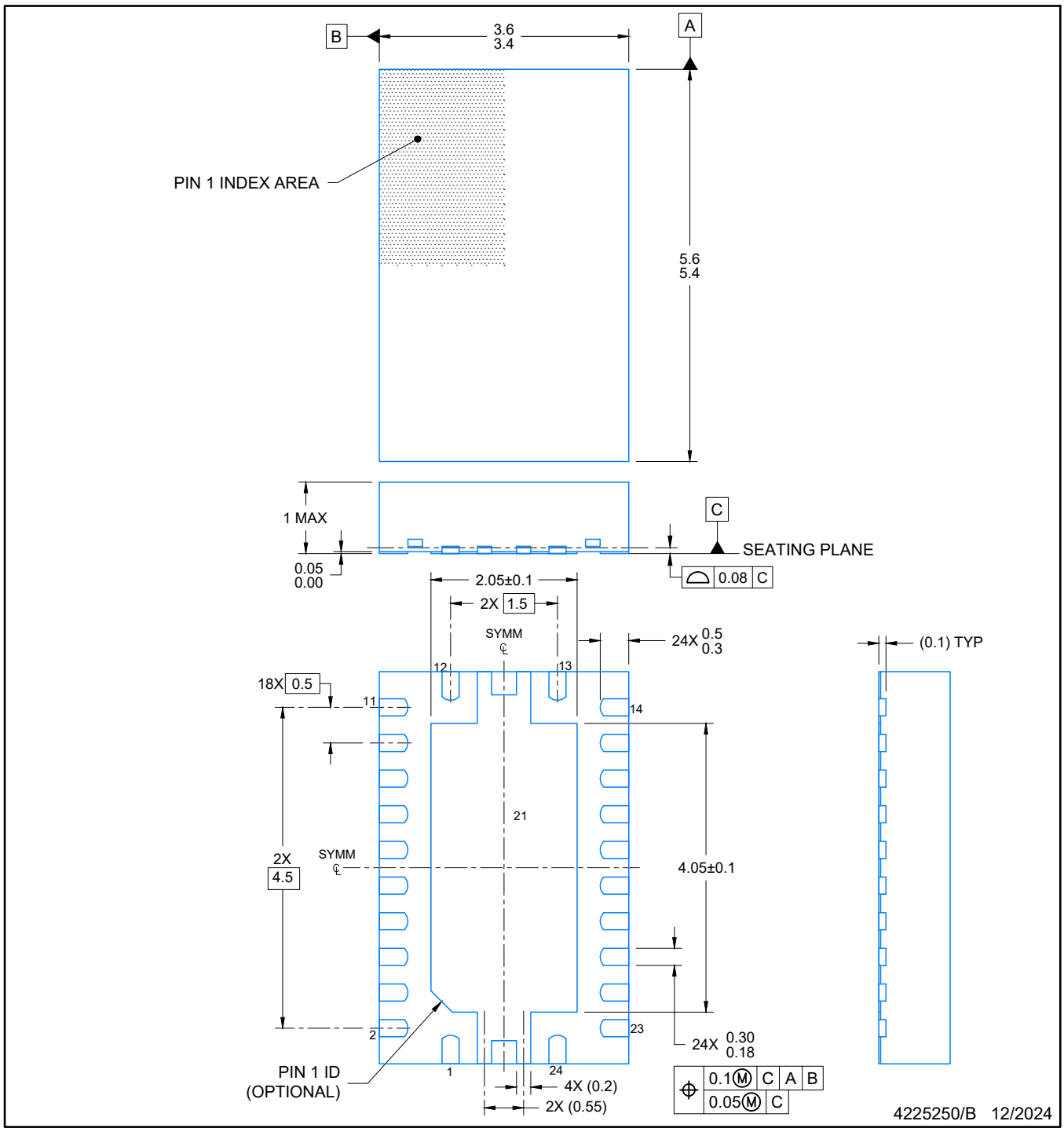

NOTES:

1. All linear dimensions are in millimeters. Any dimensions in parenthesis are for reference only. Dimensioning and tolerancing per ASME Y14.5M.
2. This drawing is subject to change without notice.
3. The package thermal pad must be soldered to the printed circuit board for optimal thermal and mechanical performance.

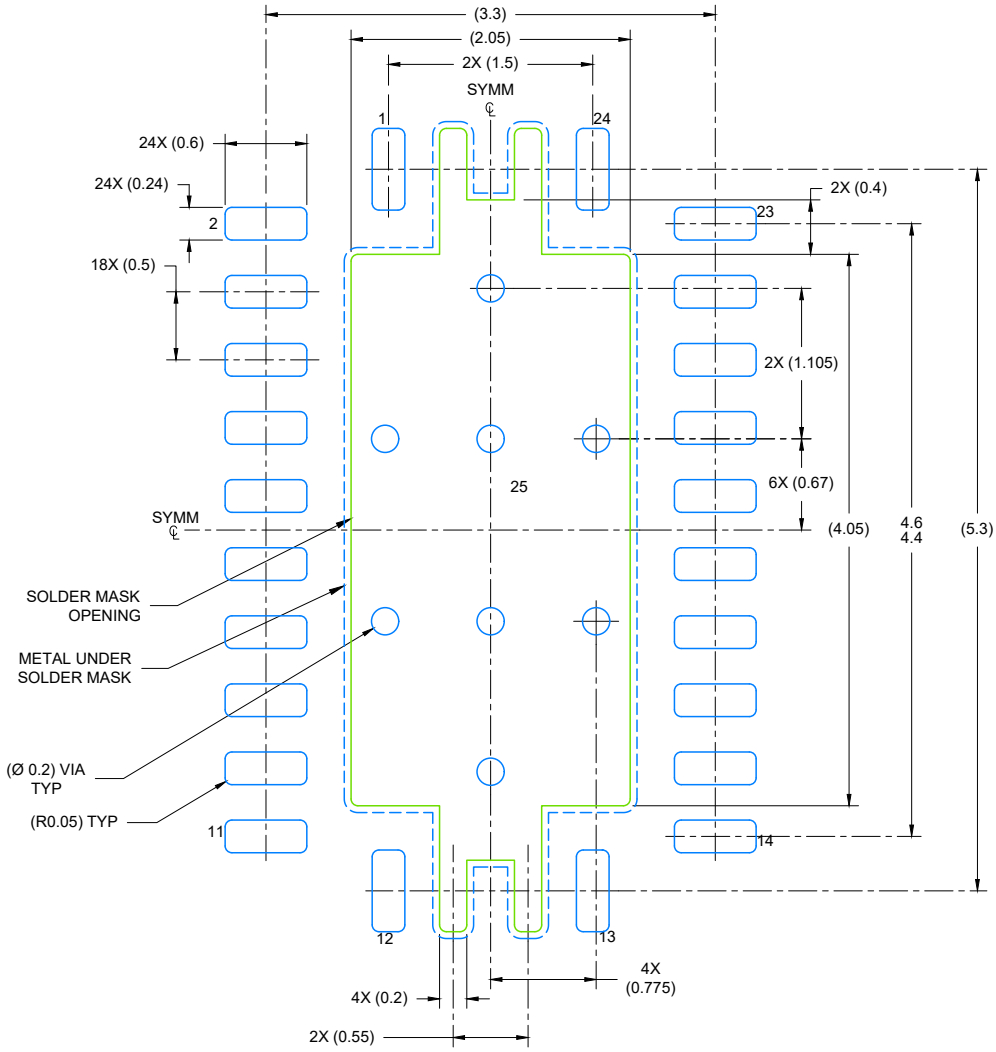

LAND PATTERN EXAMPLE
EXPOSED METAL SHOWN
SCALE: 18X

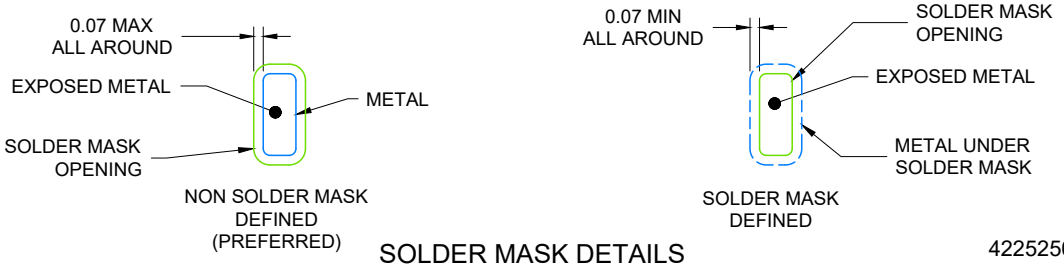

SOLDER MASK DETAILS

4225250/B 12/2024

NOTES: (continued)

4. This package is designed to be soldered to a thermal pad on the board. For more information, see Texas Instruments literature number SLUA271 (www.ti.com/lit/slua271).
5. Vias are optional depending on application, refer to device data sheet. If any vias are implemented, refer to their locations shown on this view. It is recommended that vias under paste be filled, plugged or tented.

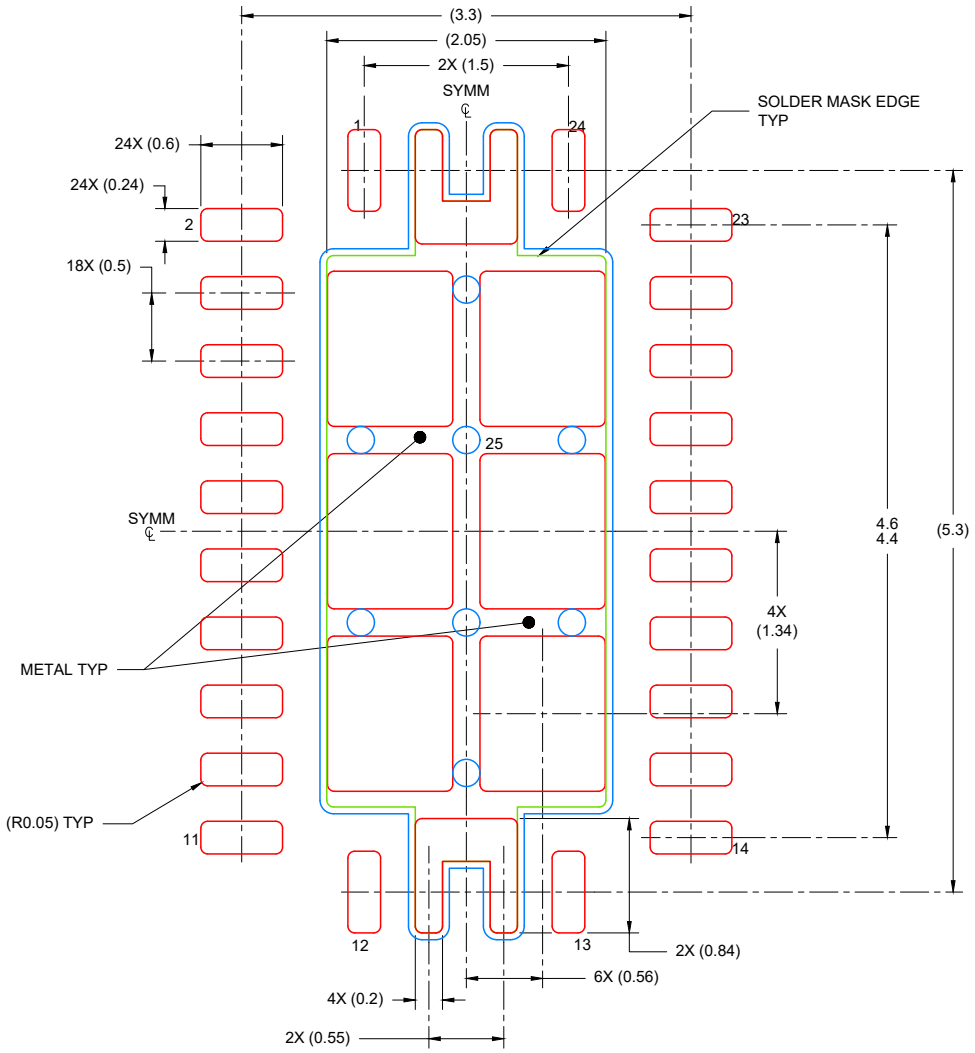

SOLDER PASTE EXAMPLE
BASED ON 0.125 mm THICK STENCIL

EXPOSED PAD
80% PRINTED COVERAGE BY AREA
SCALE: 18X

4225250/B 12/2024

NOTES: (continued)

6. Laser cutting apertures with trapezoidal walls and rounded corners may offer better paste release. IPC-7525 may have alternate design recommendations.

IMPORTANT NOTICE AND DISCLAIMER

TI PROVIDES TECHNICAL AND RELIABILITY DATA (INCLUDING DATA SHEETS), DESIGN RESOURCES (INCLUDING REFERENCE DESIGNS), APPLICATION OR OTHER DESIGN ADVICE, WEB TOOLS, SAFETY INFORMATION, AND OTHER RESOURCES “AS IS” AND WITH ALL FAULTS, AND DISCLAIMS ALL WARRANTIES, EXPRESS AND IMPLIED, INCLUDING WITHOUT LIMITATION ANY IMPLIED WARRANTIES OF MERCHANTABILITY, FITNESS FOR A PARTICULAR PURPOSE OR NON-INFRINGEMENT OF THIRD PARTY INTELLECTUAL PROPERTY RIGHTS.

These resources are intended for skilled developers designing with TI products. You are solely responsible for (1) selecting the appropriate TI products for your application, (2) designing, validating and testing your application, and (3) ensuring your application meets applicable standards, and any other safety, security, regulatory or other requirements.

These resources are subject to change without notice. TI grants you permission to use these resources only for development of an application that uses the TI products described in the resource. Other reproduction and display of these resources is prohibited. No license is granted to any other TI intellectual property right or to any third party intellectual property right. TI disclaims responsibility for, and you will fully indemnify TI and its representatives against, any claims, damages, costs, losses, and liabilities arising out of your use of these resources.

TI’s products are provided subject to TI’s Terms of Sale or other applicable terms available either on ti.com or provided in conjunction with such TI products. TI’s provision of these resources does not expand or otherwise alter TI’s applicable warranties or warranty disclaimers for TI products.

TI objects to and rejects any additional or different terms you may have proposed.

Mailing Address: Texas Instruments, Post Office Box 655303, Dallas, Texas 75265
Copyright © 2025, Texas Instruments Incorporated