TEXAS INSTRUMENTS
Data sheet acquired from Harris Semiconductor
SCHS066C– Revised October 2003

CD4099B Types

CMOS
8-Bit Addressable Latch

High-Voltage Types (20-Volt Rating)

■ CD4099B 8-bit addressable latch is a serial-input, parallel-output storage register that can perform a variety of functions.

Data are inputted to a particular bit in the latch when that bit is addressed (by means of inputs A0, A1, A2) and when WRITE DISABLE is at a low level. When WRITE DISABLE is high, data entry is inhibited; however, all 8 outputs can be continuously read independent of WRITE DISABLE and address inputs.

A master RESET input is available, which resets all bits to a logic "0" level when RESET and WRITE DISABLE are at a high level. When RESET is at a high level, and WRITE DISABLE is at a low level, the latch acts as a 1-of-8 demultiplexer; the bit that is addressed has an active output which follows the data input, while all unaddressed bits are held to a logic "0" level.

The CD4099B types are supplied in 16-lead hermetic ceramic dual-in-line packages (F3A suffix), 16-lead plastic dual-in-line packages (E suffix), 16-lead small-outline packages (M, M96, MT, and NSR suffixes), and 16-lead thin shrink small-outline packages (PW and PWR suffixes).

Features:

- Serial data input
- Active parallel output
- Storage register capability
- Master clear
- Can function as demultiplexer
- Standardized, symmetrical output characteristics
- 100% tested for quiescent current at 20 V
- Maximum input current of 1 μA at 18 V (full package-temperature range), 100 nA at 18 V and 25°C
- Noise margin (full package-temperature range) = 1 V at V_{DD} = 5 V, 2 V at V_{DD} = 10 V, 2.5 V at V_{DD} = 15 V
- 5-V, 10-V, and 15-V parametric ratings
- Meets all requirements of JEDEC Tentative Standard No. 13B, "Standard Specifications for Description of 'B' Series CMOS Devices"

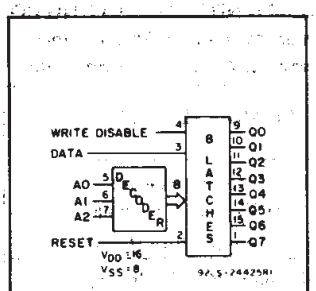

Functional Diagram

Applications:

- Multi-line decoders
- A/D converters

MAXIMUM RATINGS, *Absolute-Maximum Values:*

DC SUPPLY-VOLTAGE RANGE, (V_{DD})
Voltages referenced to V_{SS} Terminal) ..... -0.5V to +20V
INPUT VOLTAGE RANGE, ALL INPUTS ..... -0.5V to V_{DD} +0.5V
DC INPUT CURRENT, ANY ONE INPUT ..... ±10mA
POWER DISSIPATION PER PACKAGE (P_D):
For T_A = -55°C to +100°C 500mW
For T_A = +100°C to +125°C ..... Derate Linearity at 12mW/°C to 200mW
DEVICE DISSIPATION PER OUTPUT TRANSISTOR
FOR T_A = FULL PACKAGE-TEMPERATURE RANGE (All Package Types) 100mW
OPERATING-TEMPERATURE RANGE (T_A) ..... -55°C to +125°C
STORAGE TEMPERATURE RANGE (T_{stg}) ..... -65°C to +150°C
LEAD TEMPERATURE (DURING SOLDERING):
At distance 1/16 ± 1/32 inch (1.59 ± 0.79mm) from case for 10s max ..... +265°C

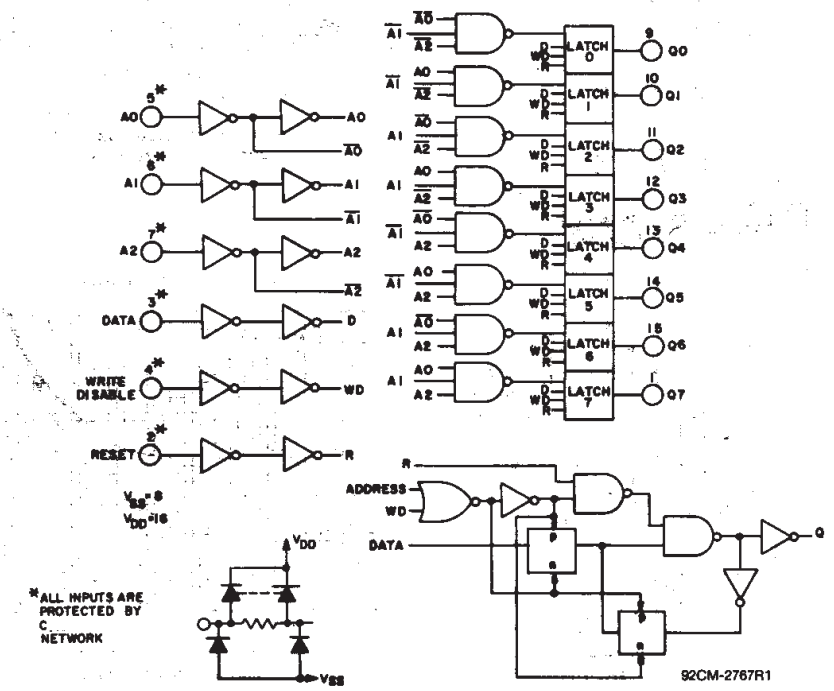

Fig. 1 — Logic diagram of CD4099B and detail of 1 of 8 latches.

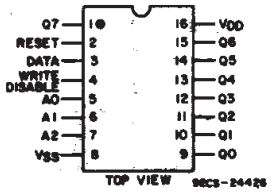

TERMINAL ASSIGNMENT

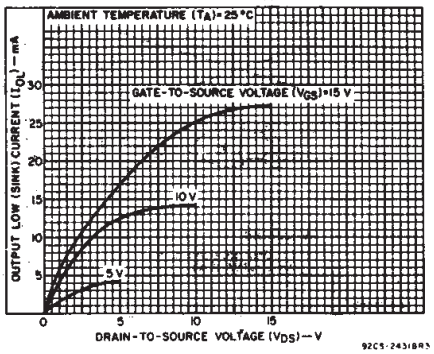

Fig. 2 — Typical output low (sink) current characteristics.

Copyright © 2003, Texas Instruments Incorporated

RECOMMENDED OPERATING CONDITIONS *at T_A = 25° C (Unless otherwise specified)*
For maximum reliability, nominal operating conditions should be selected so that operation is always within the following ranges.

CHARACTERISTIC	SEE FIG. 15*	V_{DD} (V)	LIMITS MIN.	LIMITS MAX.	UNITS
Supply Voltage Range: (At T_A = Full Package Temperature Range)			3	18	V
Minimum Pulse Width, t_W Data	4	5	200	–	ns
		10	100	–	
		15	80		
Address	8	5	400	–	
		10	200	–	
		15	125	–	
Reset	5	5	150	–	
		10	75	–	
		15	50	–	
Setup Time, t_S Data to WRITE DISABLE	6	5	100	–	ns
		10	50	–	
		15	35	–	
Hold Time, t_H Data to WRITE DISABLE	7	5	150	–	ns
		10	75	–	
		15	50	–	

* Circled numbers refer to times indicated on master timing diagram.

Note: In addition to the above characteristics, a WRITE DISABLE ON time (the time that WRITE DISABLE is at a high level) must be observed during an address change for the total time that the external address lines A0, A1, and A2 are settling to a stable level, to prevent a wrong cell from being addressed (see Fig. 3).

MODE SELECTION			
WD	R	ADDRESSED LATCH	UNADDRESSED LATCH
0	0	Follows Data	Holds Previous State
0	1	Follows Data (Active High 8-Channel Demultiplexer)	Reset to "0"
1	0	Holds Previous State	
1	1	Reset to "0"	Reset to "0"

WD = WRITE DISABLE R = RESET

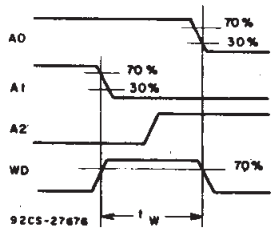

Fig. 3 — Definition of WRITE DISABLE ON time.

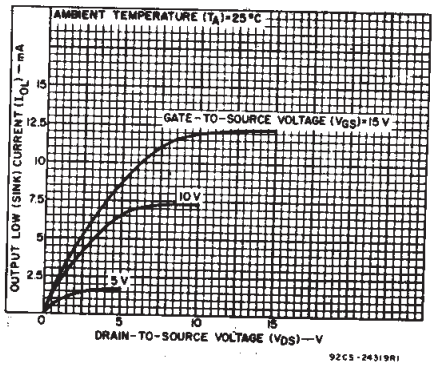

Fig. 4 — Minimum output low (sink) current characteristics.

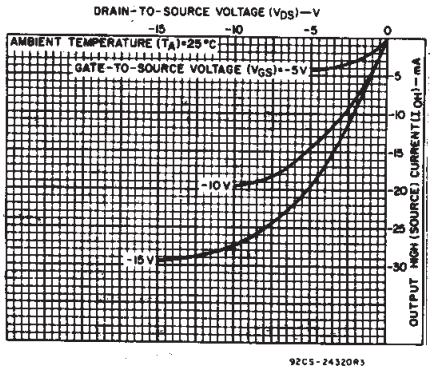

Fig. 6 — Typical output high (source) current characteristics.

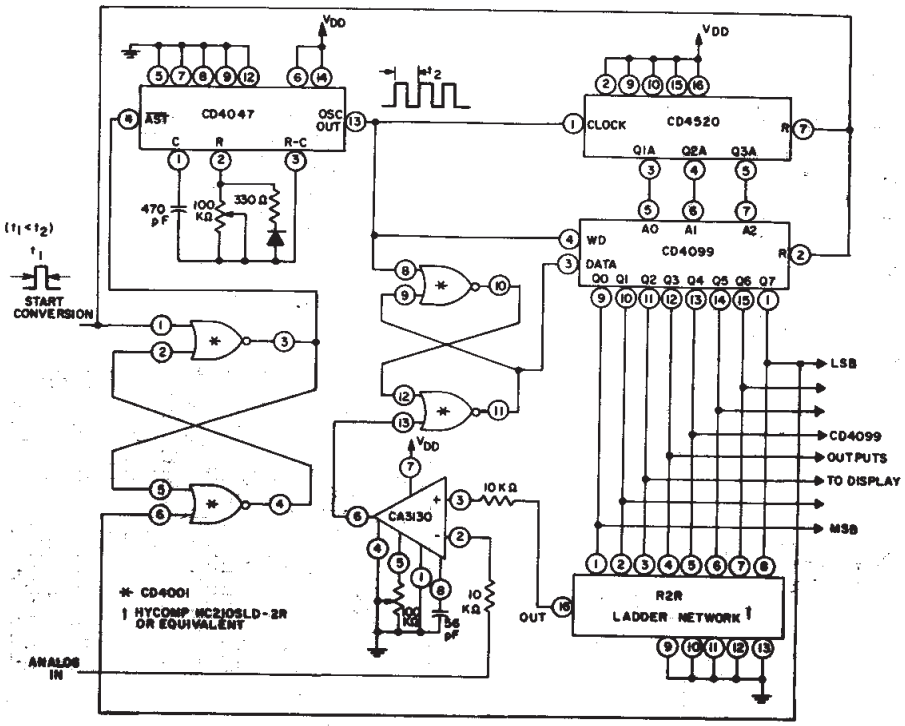

Fig. 5 — A/D converter

STATIC ELECTRICAL CHARACTERISTICS

CHARACTERISTIC	CONDITIONS			LIMITS AT INDICATED TEMPERATURES (°C)							UNITS
								+25			
	V_O (V)	V_{IN} (V)	V_{DD} (V)	−55	−40	+85	+125	Min.	Typ.	Max.	
Quiescent Device Current, I_{DD} Max.	–	0,5	5	5	5	150	150	–	0.04	5	μA
	–	0,10	10	10	10	300	300	–	0.04	10	
	–	0,15	15	20	20	600	600	–	0.04	20	
	–	0,20	20	100	100	3000	3000	–	0.08	100	
Output Low (Sink) Current I_{OL} Min.	0.4	0,5	5	0.64	0.61	0.42	0.36	0.51	1	–	mA
	0.5	0,10	10	1.6	1.5	1.1	0.9	1.3	2.6	–	
	1.5	0,15	15	4.2	4	2.8	2.4	3.4	6.8	–	
Output High (Source) Current, I_{OH} Min.	4.6	0,5	5	−0.64	−0.61	−0.42	−0.36	−0.51	−1	–	
	2.5	0,5	5	−2	−1.8	−1.3	−1.15	−1.6	−3.2	–	
	9.5	0,10	10	−1.6	−1.5	−1.1	−0.9	−1.3	−2.6	–	
	13.5	0,15	15	−4.2	−4	−2.8	−2.4	−3.4	−6.8	–	
Output Voltage: Low-Level, V_{OL} Max.	–	0,5	5	0.05				–	0	0.05	V
	–	0,10	10	0.05				–	0	0.05	
	–	0,15	15	0.05				–	0	0.05	
Output Voltage: High-Level, V_{OH} Min.	–	0,5	5	4.95				4.95	5	–	
	–	0,10	10	9.95				9.95	10	–	
	–	0,15	15	14.95				14.95	15	–	
Input Low Voltage, V_{IL} Max.	0.5, 4.5	–	5	1.5				–	–	1.5	V
	1, 9	–	10	3				–	–	3	
	1.5,13.5	–	15	4				–	–	4	
Input High Voltage, V_{IH} Min.	0.5, 4.5	–	5	3.5				3.5	–	–	
	1, 9	–	10	7				7	–	–	
	1.5,13.5	–	15	11				11	–	–	
Input Current I_{IN} Max.	–	0,18	18	±0.1	±0.1	±1	±1	–	$\pm10^{-5}$	±0.1	μA

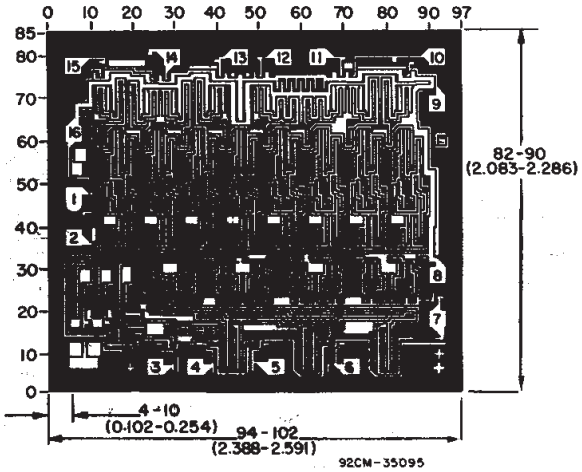

CD4099BH
DIMENSIONS AND PAD LAYOUT

Dimensions in parentheses are in millimeters and are derived from the basic inch dimensions as indicated. Grid graduations are in mils (10^{-3} inch).

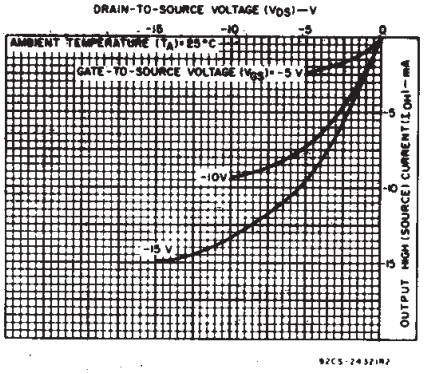

Fig.7 – Minimum output high (source) current characteristics.

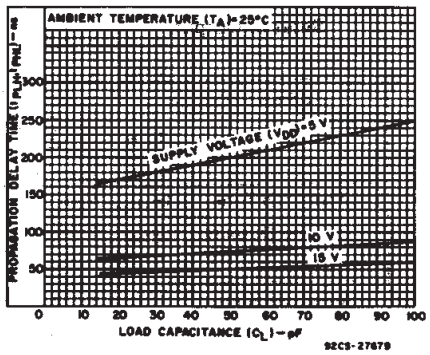

Fig. 8 – Typical propagation delay time (data to Qn) vs. load capacitance.

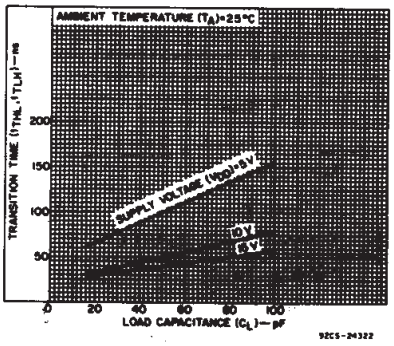

Fig. 9 – Typical transition time vs. load capacitance.

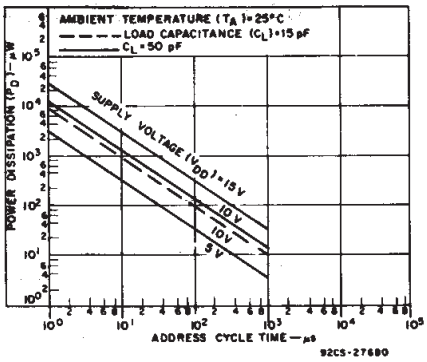

Fig.10 – Typical dynamic power dissipation vs. address cycle time.

DYNAMIC ELECTRICAL CHARACTERISTICS *at $T_A = 25°$ C, $C_L = 50$ pF, Input t_r, $t_f = 20$ ns, $R_L = 200$ KΩ*

CHARACTERISTIC	CONDITIONS SEE FIG.15*	V_{DD} (V)	LIMITS ALL PACKAGE TYPES TYP.	MAX.	UNITS
Propagation Delay: t_{PLH}, t_{PHL} Data to Output,	1	5	200	400	ns
		10	75	150	
		15	50	100	
WRITE DISABLE to Output, t_{PLH}, t_{PHL}	2	5	200	400	
		10	80	160	
		15	60	120	
Reset to Output, t_{PHL}	3	5	175	350	
		10	80	160	
		15	65	130	
Address to Output, t_{PLH}, t_{PHL}	9	5	225	450	
		10	100	200	
		15	75	150	
Transition Time, t_{THL}, t_{TLH} (Any Output)		5	100	200	ns
		10	50	100	
		15	40	80	
Minimum Pulse Width, t_W Data	4	5	100	200	ns
		10	50	100	
		15	40	80	
Address	8	5	200	400	ns
		10	100	200	
		15	65	125	
Reset	5	5	75	150	ns
		10	40	75	
		15	25	50	
Minimum Setup Time, t_S Data to WRITE DISABLE	6	5	50	100	ns
		10	25	50	
		15	20	35	
Minimum Hold Time, t_H Data to WRITE DISABLE	7	5	75	150	ns
		10	40	75	
		15	25	50	
Input Capacitance, C_{IN}	Any Input		5	7.5	pF

*Circled numbers refer to times indicated on master timing diagram.

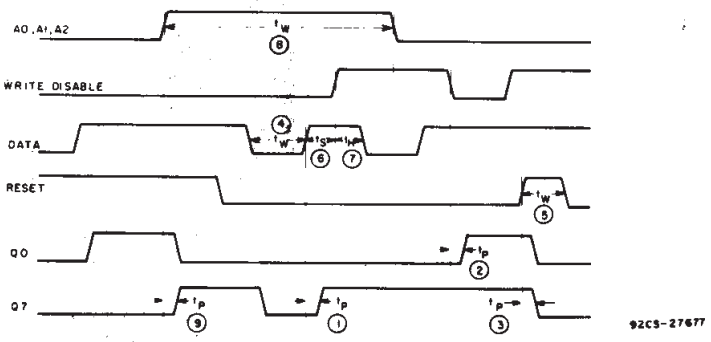

Fig. 15 — Master timing diagram.

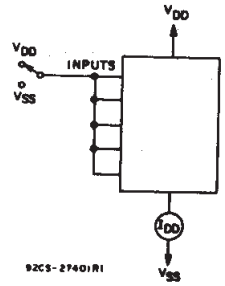

Fig. 11 — Quiescent device current test circuit.

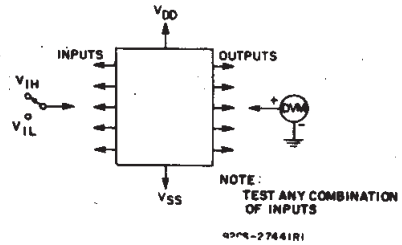

Fig. 12 — Input voltage test circuit.

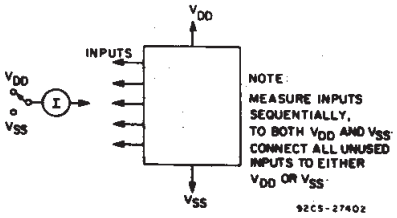

Fig. 13 — Input current test circuit.

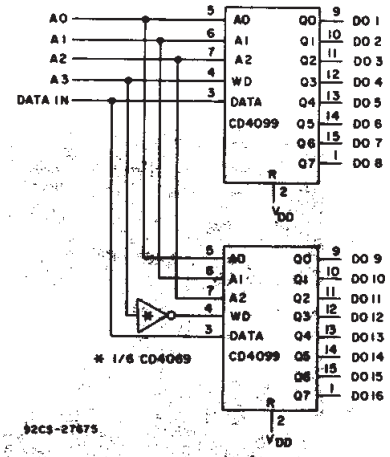

Fig. 14 — 1 of 16 decoder/demultiplexer.

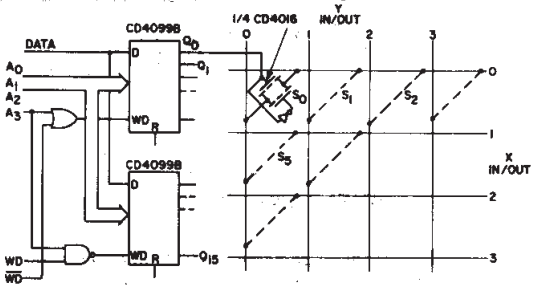

Fig. 16 — Multiple selection decoding — 4 x 4 crosspoint switch.

PACKAGING INFORMATION

Orderable part number	Status (1)	Material type (2)	Package | Pins	Package qty | Carrier	RoHS (3)	Lead finish/ Ball material (4)	MSL rating/ Peak reflow (5)	Op temp (°C)	Part marking (6)
CD4099BE	Active	Production	PDIP (N) | 16	25 | TUBE	Yes	NIPDAU	N/A for Pkg Type	-55 to 125	CD4099BE
CD4099BE.A	Active	Production	PDIP (N) | 16	25 | TUBE	Yes	NIPDAU	N/A for Pkg Type	-55 to 125	CD4099BE
CD4099BF	Active	Production	CDIP (J) | 16	25 | TUBE	No	SNPB	N/A for Pkg Type	-55 to 125	CD4099BF
CD4099BF.A	Active	Production	CDIP (J) | 16	25 | TUBE	No	SNPB	N/A for Pkg Type	-55 to 125	CD4099BF
CD4099BF3A	Active	Production	CDIP (J) | 16	25 | TUBE	No	SNPB	N/A for Pkg Type	-55 to 125	CD4099BF3A
CD4099BF3A.A	Active	Production	CDIP (J) | 16	25 | TUBE	No	SNPB	N/A for Pkg Type	-55 to 125	CD4099BF3A
CD4099BM	Obsolete	Production	SOIC (D) | 16	-	-	Call TI	Call TI	-55 to 125	CD4099BM
CD4099BM96	Active	Production	SOIC (D) | 16	2500 | LARGE T&R	Yes	NIPDAU	Level-1-260C-UNLIM	-55 to 125	CD4099BM
CD4099BM96.A	Active	Production	SOIC (D) | 16	2500 | LARGE T&R	Yes	NIPDAU	Level-1-260C-UNLIM	-55 to 125	CD4099BM
CD4099BNSR	Active	Production	SOP (NS) | 16	2000 | LARGE T&R	Yes	NIPDAU	Level-1-260C-UNLIM	-55 to 125	CD4099B
CD4099BNSR.A	Active	Production	SOP (NS) | 16	2000 | LARGE T&R	Yes	NIPDAU	Level-1-260C-UNLIM	-55 to 125	CD4099B
CD4099BPWR	Active	Production	TSSOP (PW) | 16	2000 | LARGE T&R	Yes	NIPDAU	Level-1-260C-UNLIM	-55 to 125	CM099B
CD4099BPWR.A	Active	Production	TSSOP (PW) | 16	2000 | LARGE T&R	Yes	NIPDAU	Level-1-260C-UNLIM	-55 to 125	CM099B
JM38510/17601BEA	Active	Production	CDIP (J) | 16	25 | TUBE	No	SNPB	N/A for Pkg Type	-55 to 125	JM38510/ 17601BEA
JM38510/17601BEA.A	Active	Production	CDIP (J) | 16	25 | TUBE	No	SNPB	N/A for Pkg Type	-55 to 125	JM38510/ 17601BEA
M38510/17601BEA	Active	Production	CDIP (J) | 16	25 | TUBE	No	SNPB	N/A for Pkg Type	-55 to 125	JM38510/ 17601BEA

(1) **Status:** For more details on status, see our product life cycle.

(2) **Material type:** When designated, preproduction parts are prototypes/experimental devices, and are not yet approved or released for full production. Testing and final process, including without limitation quality assurance, reliability performance testing, and/or process qualification, may not yet be complete, and this item is subject to further changes or possible discontinuation. If available for ordering, purchases will be subject to an additional waiver at checkout, and are intended for early internal evaluation purposes only. These items are sold without warranties of any kind.

(3) **RoHS values:** Yes, No, RoHS Exempt. See the TI RoHS Statement for additional information and value definition.

(4) **Lead finish/Ball material:** Parts may have multiple material finish options. Finish options are separated by a vertical ruled line. Lead finish/Ball material values may wrap to two lines if the finish value exceeds the maximum column width.

(5) **MSL rating/Peak reflow:** The moisture sensitivity level ratings and peak solder (reflow) temperatures. In the event that a part has multiple moisture sensitivity ratings, only the lowest level per JEDEC standards is shown. Refer to the shipping label for the actual reflow temperature that will be used to mount the part to the printed circuit board.

(6) **Part marking:** There may be an additional marking, which relates to the logo, the lot trace code information, or the environmental category of the part.

Multiple part markings will be inside parentheses. Only one part marking contained in parentheses and separated by a "~" will appear on a part. If a line is indented then it is a continuation of the previous line and the two combined represent the entire part marking for that device.

Important Information and Disclaimer: The information provided on this page represents TI's knowledge and belief as of the date that it is provided. TI bases its knowledge and belief on information provided by third parties, and makes no representation or warranty as to the accuracy of such information. Efforts are underway to better integrate information from third parties. TI has taken and continues to take reasonable steps to provide representative and accurate information but may not have conducted destructive testing or chemical analysis on incoming materials and chemicals. TI and TI suppliers consider certain information to be proprietary, and thus CAS numbers and other limited information may not be available for release.

In no event shall TI's liability arising out of such information exceed the total purchase price of the TI part(s) at issue in this document sold by TI to Customer on an annual basis.

OTHER QUALIFIED VERSIONS OF CD4099B, CD4099B-MIL :

- Catalog : CD4099B
- Military : CD4099B-MIL

NOTE: Qualified Version Definitions:

- Catalog - TI's standard catalog product
- Military - QML certified for Military and Defense Applications

TAPE AND REEL INFORMATION

REEL DIMENSIONS

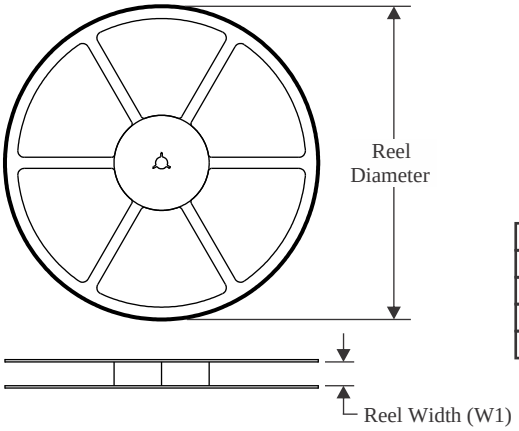

TAPE DIMENSIONS

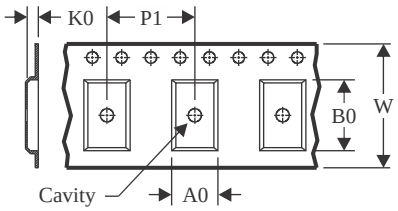

A0	Dimension designed to accommodate the component width
B0	Dimension designed to accommodate the component length
K0	Dimension designed to accommodate the component thickness
W	Overall width of the carrier tape
P1	Pitch between successive cavity centers

QUADRANT ASSIGNMENTS FOR PIN 1 ORIENTATION IN TAPE

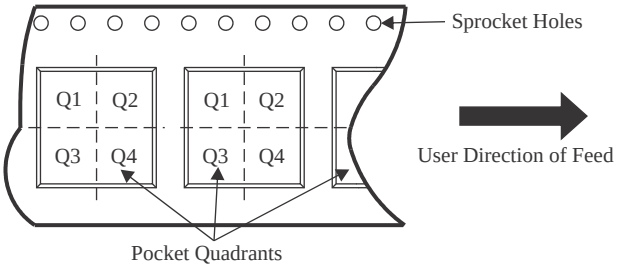

*All dimensions are nominal

Device	Package Type	Package Drawing	Pins	SPQ	Reel Diameter (mm)	Reel Width W1 (mm)	A0 (mm)	B0 (mm)	K0 (mm)	P1 (mm)	W (mm)	Pin1 Quadrant
CD4099BM96	SOIC	D	16	2500	330.0	16.4	6.5	10.3	2.1	8.0	16.0	Q1
CD4099BNSR	SOP	NS	16	2000	330.0	16.4	8.2	10.5	2.5	12.0	16.0	Q1
CD4099BPWR	TSSOP	PW	16	2000	330.0	12.4	6.9	5.6	1.6	8.0	12.0	Q1

TAPE AND REEL BOX DIMENSIONS

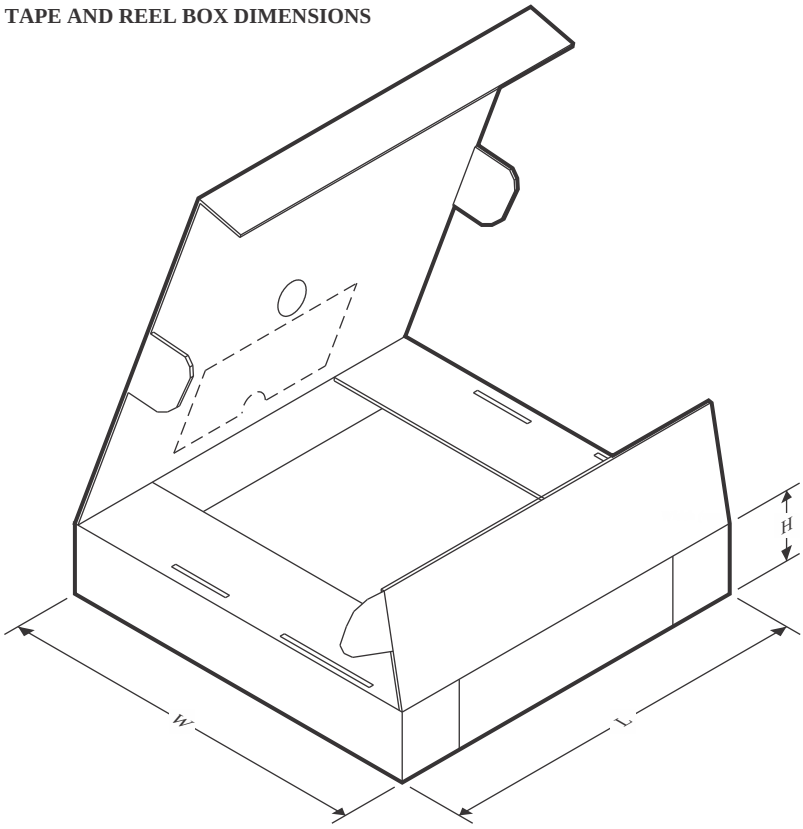

*All dimensions are nominal

Device	Package Type	Package Drawing	Pins	SPQ	Length (mm)	Width (mm)	Height (mm)
CD4099BM96	SOIC	D	16	2500	353.0	353.0	32.0
CD4099BNSR	SOP	NS	16	2000	356.0	356.0	35.0
CD4099BPWR	TSSOP	PW	16	2000	356.0	356.0	35.0

TUBE

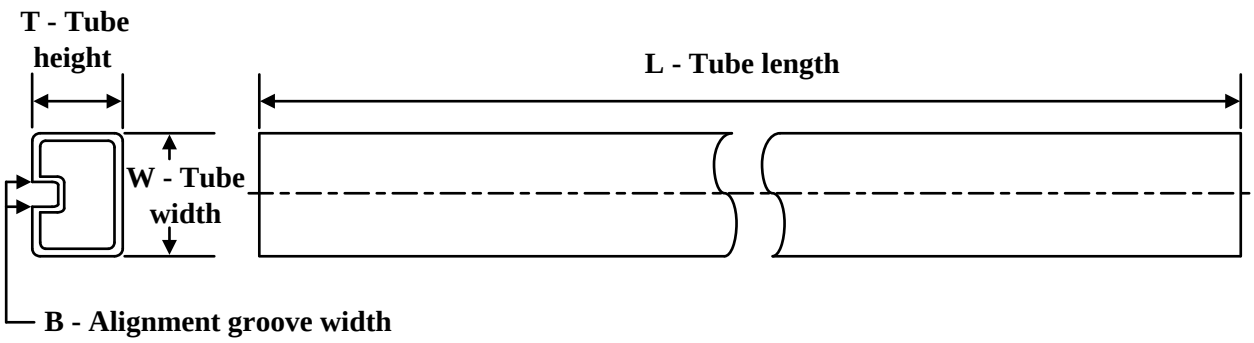

*All dimensions are nominal

Device	Package Name	Package Type	Pins	SPQ	L (mm)	W (mm)	T (µm)	B (mm)
CD4099BE	N	PDIP	16	25	506	13.97	11230	4.32
CD4099BE	N	PDIP	16	25	506	13.97	11230	4.32
CD4099BE.A	N	PDIP	16	25	506	13.97	11230	4.32
CD4099BE.A	N	PDIP	16	25	506	13.97	11230	4.32

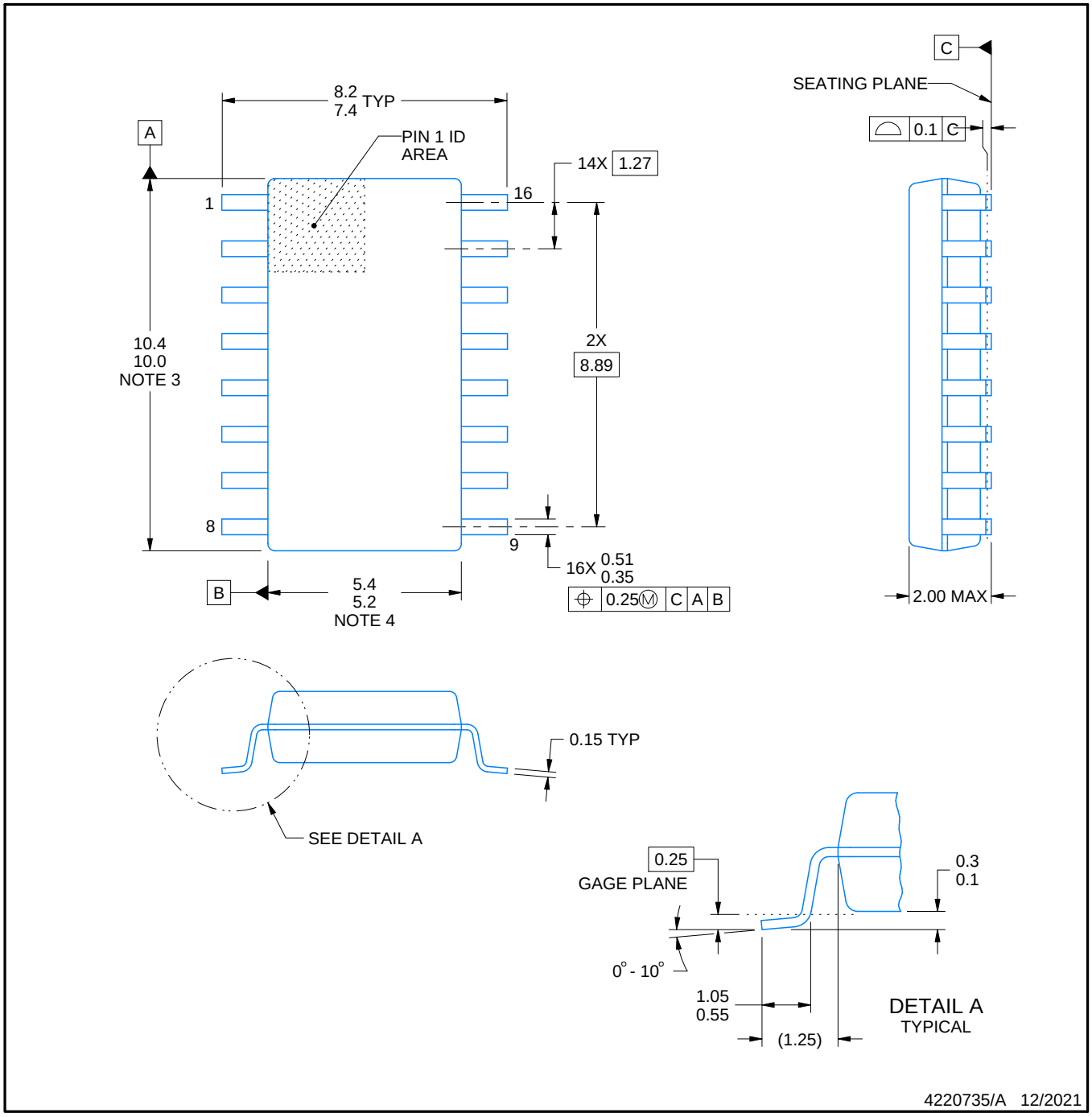

NOTES:

1. All linear dimensions are in millimeters. Dimensions in parenthesis are for reference only. Dimensioning and tolerancing per ASME Y14.5M.
2. This drawing is subject to change without notice.
3. This dimension does not include mold flash, protrusions, or gate burrs. Mold flash, protrusions, or gate burrs shall not exceed 0.15 mm, per side.
4. This dimension does not include interlead flash. Interlead flash shall not exceed 0.25 mm, per side.

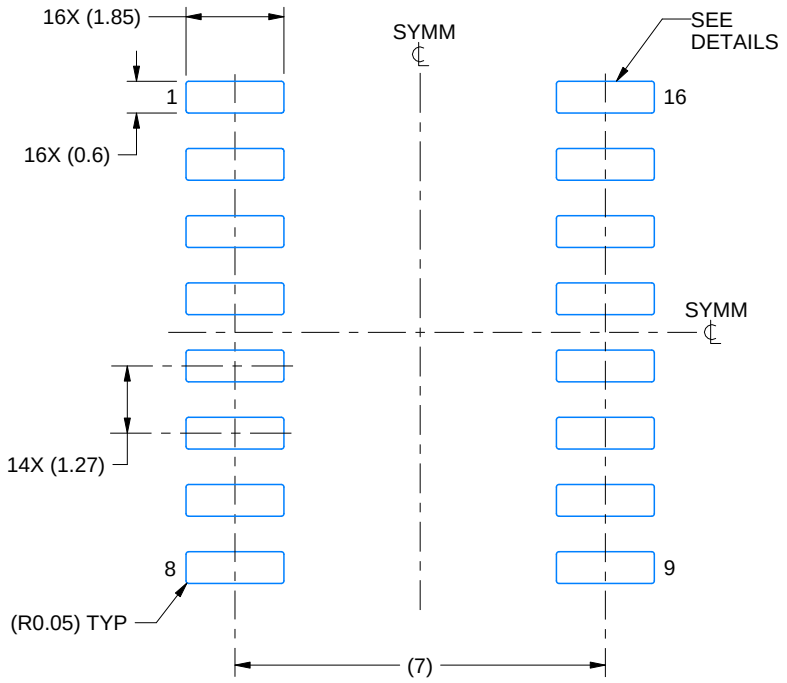

LAND PATTERN EXAMPLE
SCALE:7X

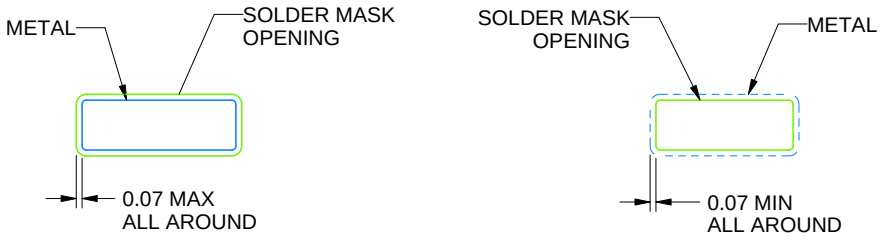

NON SOLDER MASK DEFINED

SOLDER MASK DEFINED

SOLDER MASK DETAILS

4220735/A 12/2021

NOTES: (continued)

5. Publication IPC-7351 may have alternate designs.
6. Solder mask tolerances between and around signal pads can vary based on board fabrication site.

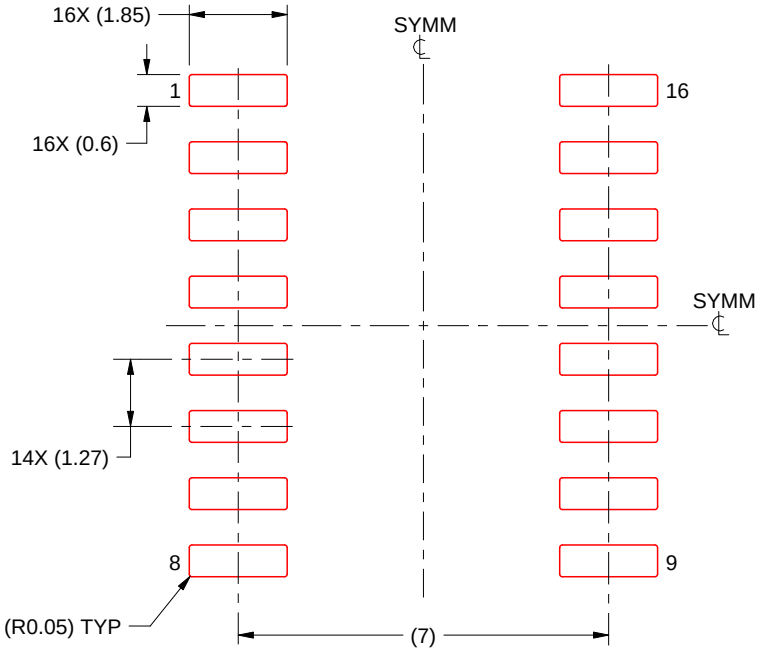

SOLDER PASTE EXAMPLE
BASED ON 0.125 mm THICK STENCIL
SCALE:7X

4220735/A 12/2021

NOTES: (continued)

7. Laser cutting apertures with trapezoidal walls and rounded corners may offer better paste release. IPC-7525 may have alternate design recommendations.
8. Board assembly site may have different recommendations for stencil design.

D (R–PDSO–G16) PLASTIC SMALL OUTLINE

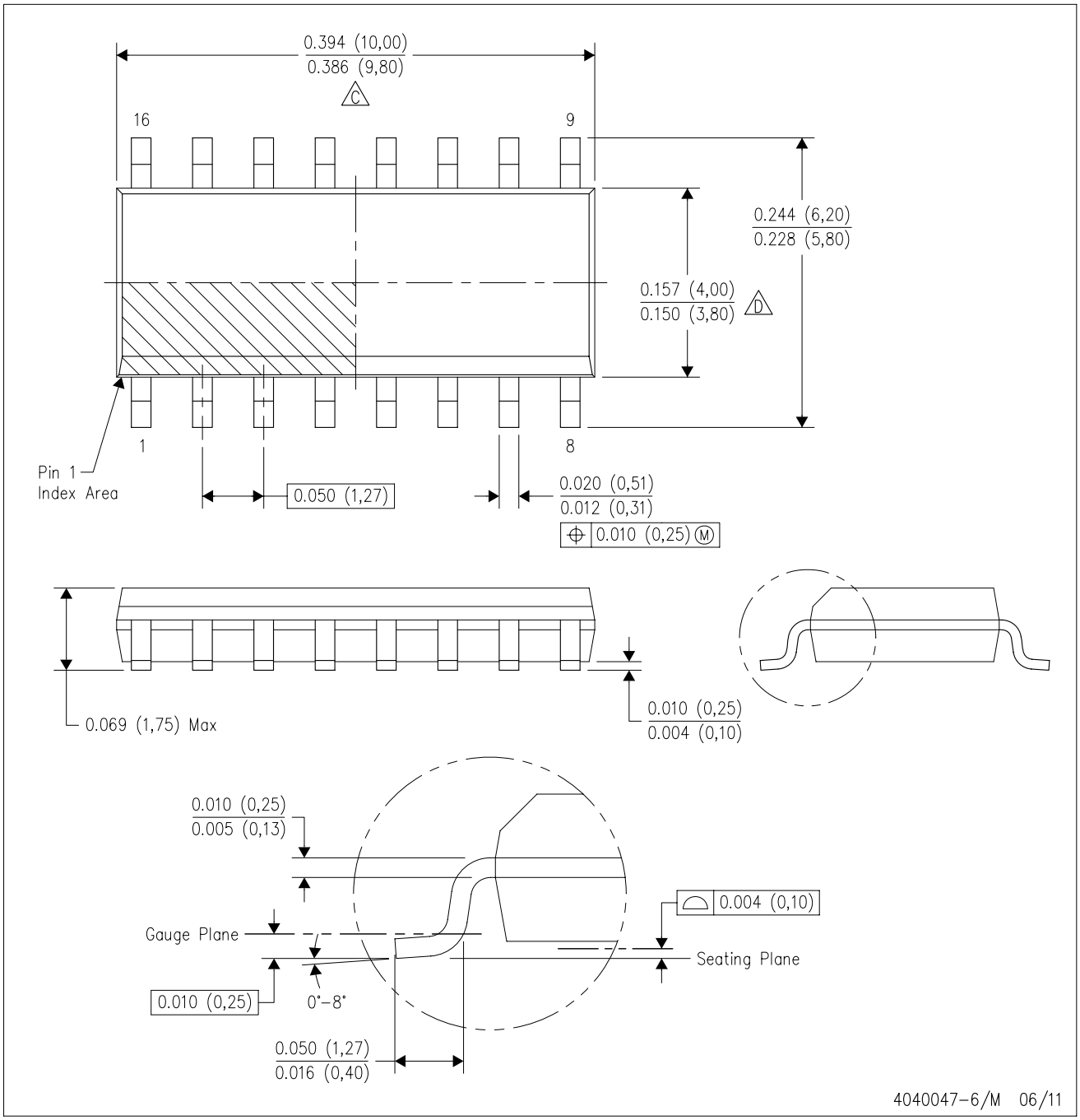

NOTES:
A. All linear dimensions are in inches (millimeters).
B. This drawing is subject to change without notice.
C. Body length does not include mold flash, protrusions, or gate burrs. Mold flash, protrusions, or gate burrs shall not exceed 0.006 (0,15) each side.
D. Body width does not include interlead flash. Interlead flash shall not exceed 0.017 (0,43) each side.
E. Reference JEDEC MS–012 variation AC.

PW0016A

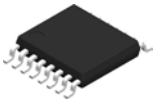

PACKAGE OUTLINE

TSSOP - 1.2 mm max height

SMALL OUTLINE PACKAGE

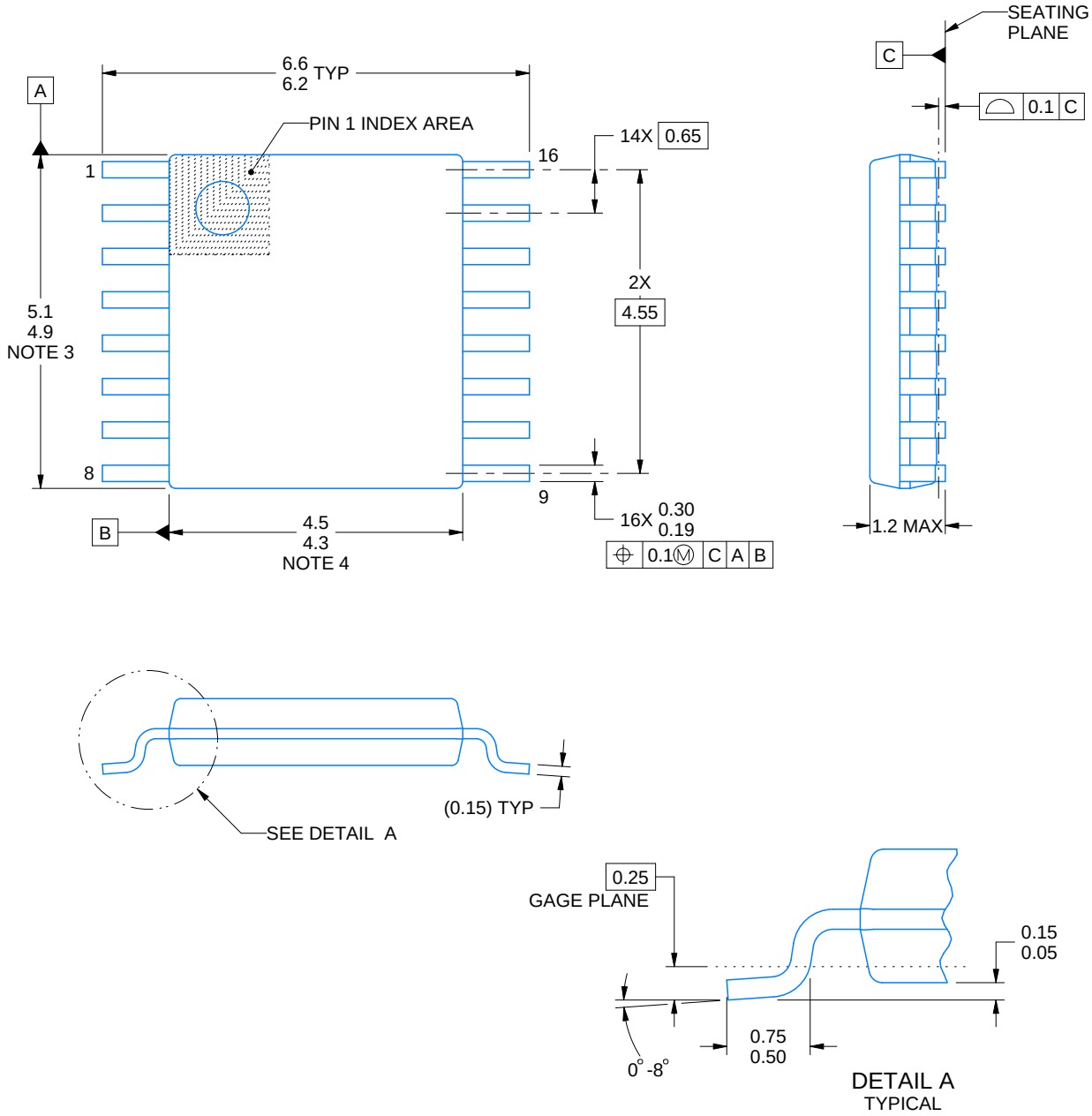

NOTES:

1. All linear dimensions are in millimeters. Any dimensions in parenthesis are for reference only. Dimensioning and tolerancing per ASME Y14.5M.
2. This drawing is subject to change without notice.
3. This dimension does not include mold flash, protrusions, or gate burrs. Mold flash, protrusions, or gate burrs shall not exceed 0.15 mm per side.
4. This dimension does not include interlead flash. Interlead flash shall not exceed 0.25 mm per side.
5. Reference JEDEC registration MO-153.

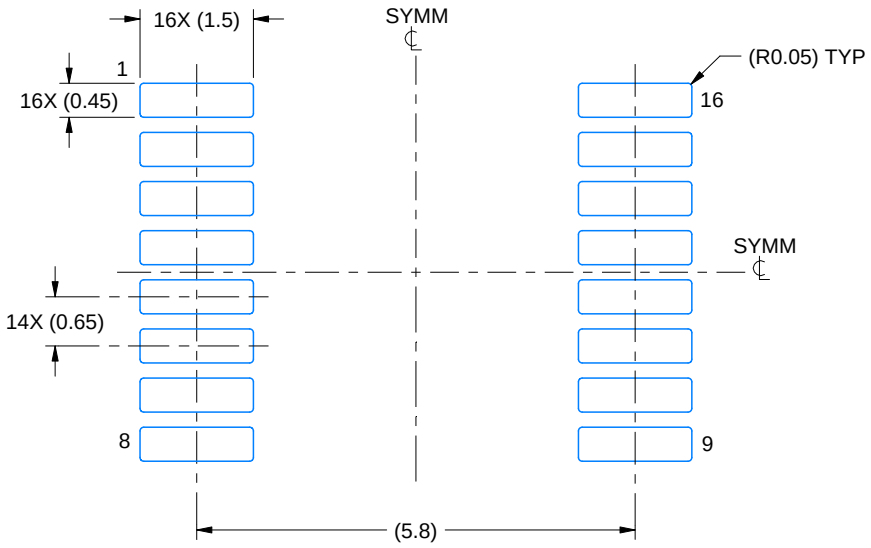

LAND PATTERN EXAMPLE
EXPOSED METAL SHOWN
SCALE: 10X

NON-SOLDER MASK DEFINED (PREFERRED)

SOLDER MASK DEFINED

SOLDER MASK DETAILS

4220204/A 02/2017

NOTES: (continued)

6. Publication IPC-7351 may have alternate designs.
7. Solder mask tolerances between and around signal pads can vary based on board fabrication site.

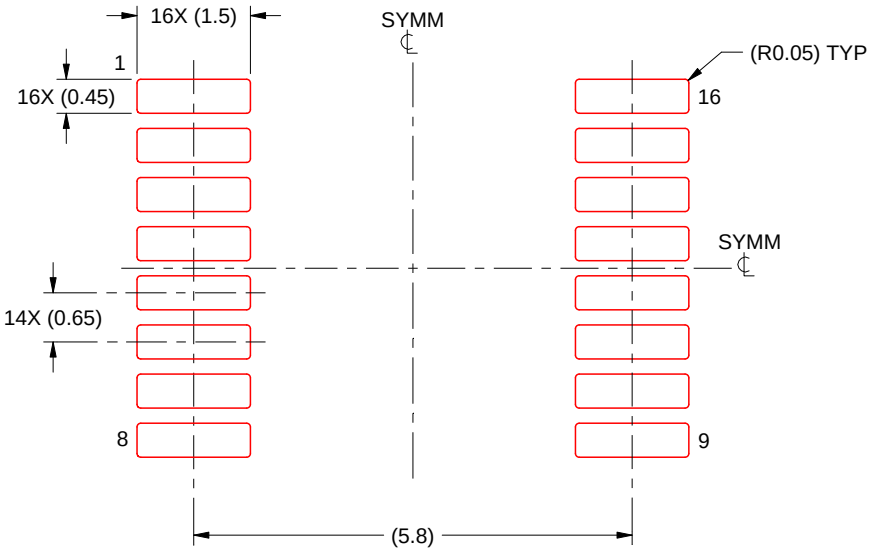

SOLDER PASTE EXAMPLE
BASED ON 0.125 mm THICK STENCIL
SCALE: 10X

4220204/A 02/2017

NOTES: (continued)

8. Laser cutting apertures with trapezoidal walls and rounded corners may offer better paste release. IPC-7525 may have alternate design recommendations.
9. Board assembly site may have different recommendations for stencil design.

MECHANICAL DATA

NS (R-PDSO-G)** **PLASTIC SMALL-OUTLINE PACKAGE**

14-PINS SHOWN

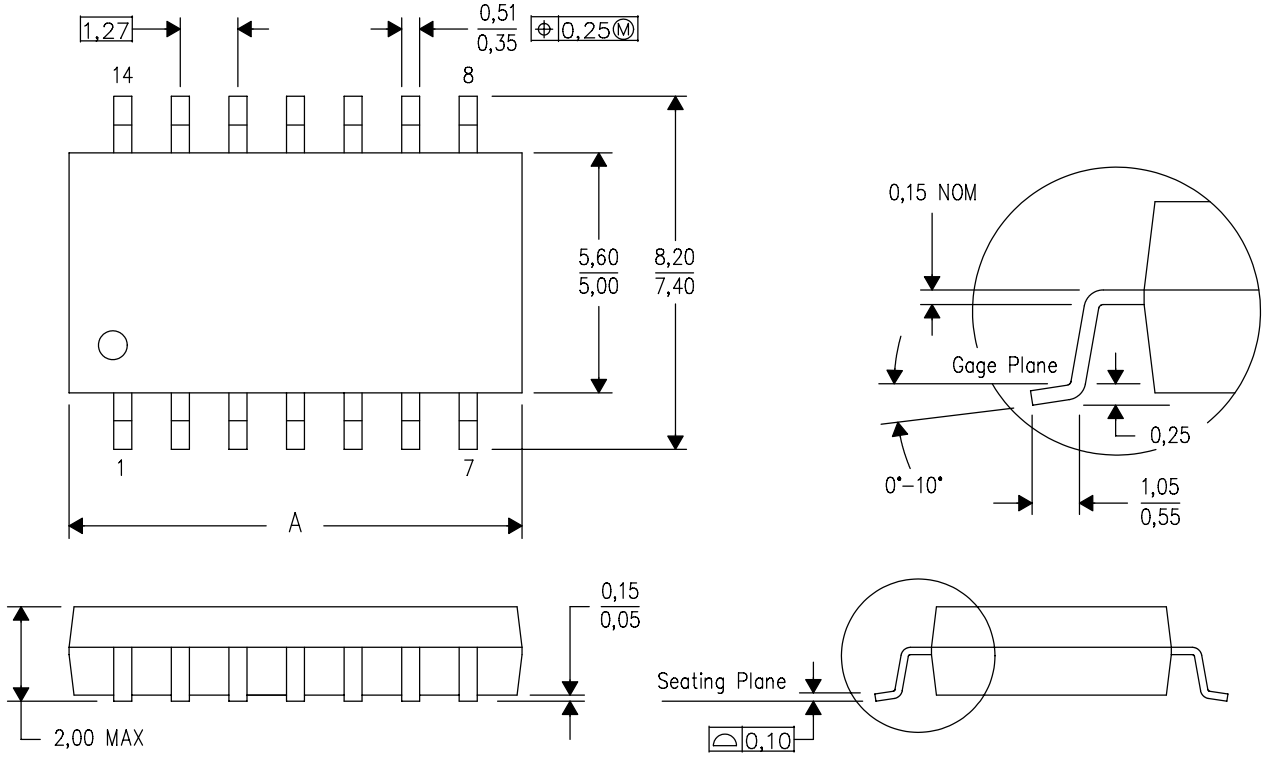

DIM \ PINS **	14	16	20	24
A MAX	10,50	10,50	12,90	15,30
A MIN	9,90	9,90	12,30	14,70

4040062/C 03/03

NOTES:
A. All linear dimensions are in millimeters.
B. This drawing is subject to change without notice.
C. Body dimensions do not include mold flash or protrusion, not to exceed 0,15.

J (R–GDIP–T**) CERAMIC DUAL IN–LINE PACKAGE

14 LEADS SHOWN

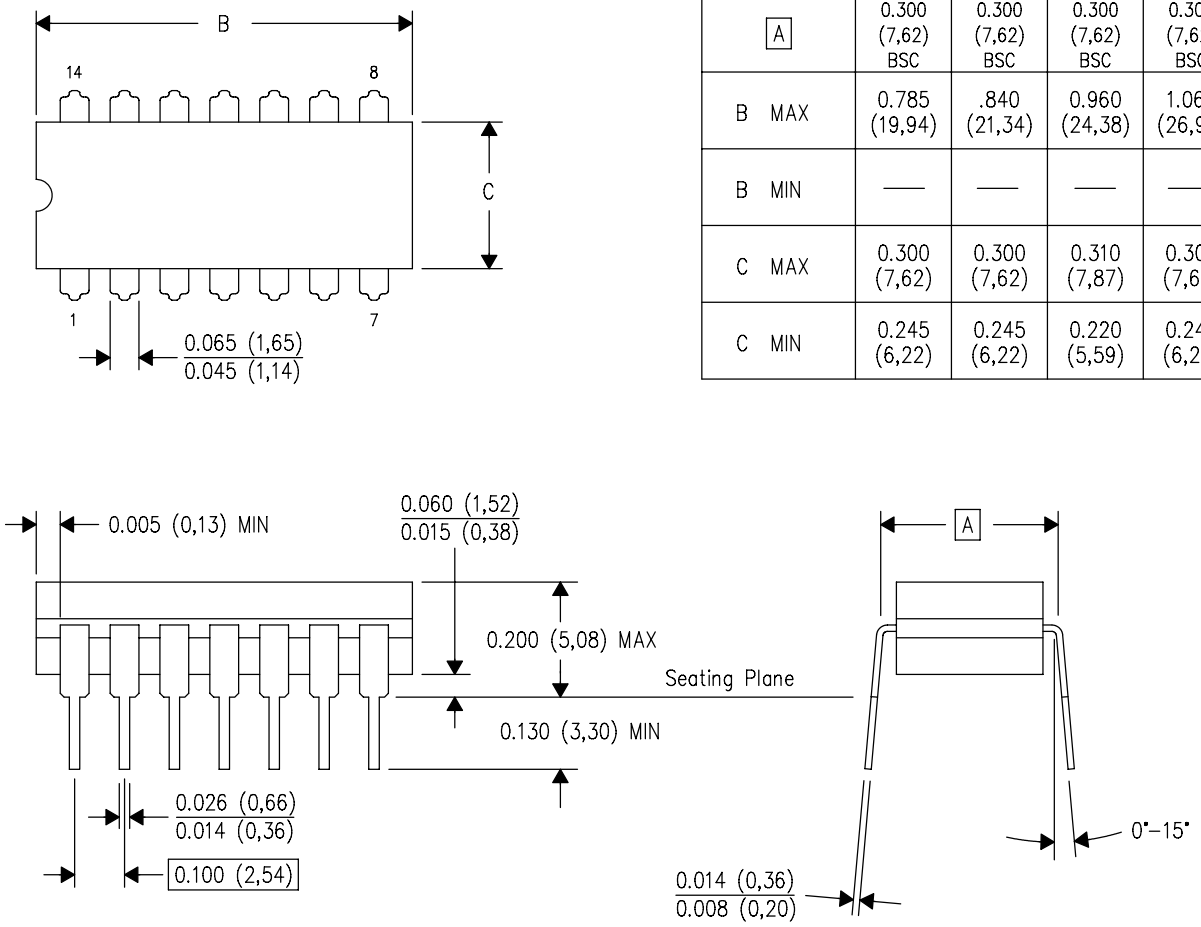

DIM \ PINS **	14	16	18	20
A	0.300 (7,62) BSC	0.300 (7,62) BSC	0.300 (7,62) BSC	0.300 (7,62) BSC
B MAX	0.785 (19,94)	.840 (21,34)	0.960 (24,38)	1.060 (26,92)
B MIN	—	—	—	—
C MAX	0.300 (7,62)	0.300 (7,62)	0.310 (7,87)	0.300 (7,62)
C MIN	0.245 (6,22)	0.245 (6,22)	0.220 (5,59)	0.245 (6,22)

4040083/F 03/03

NOTES:
- A. All linear dimensions are in inches (millimeters).
- B. This drawing is subject to change without notice.
- C. This package is hermetically sealed with a ceramic lid using glass frit.
- D. Index point is provided on cap for terminal identification only on press ceramic glass frit seal only.
- E. Falls within MIL STD 1835 GDIP1–T14, GDIP1–T16, GDIP1–T18 and GDIP1–T20.

N (R–PDIP–T**) PLASTIC DUAL–IN–LINE PACKAGE

16 PINS SHOWN

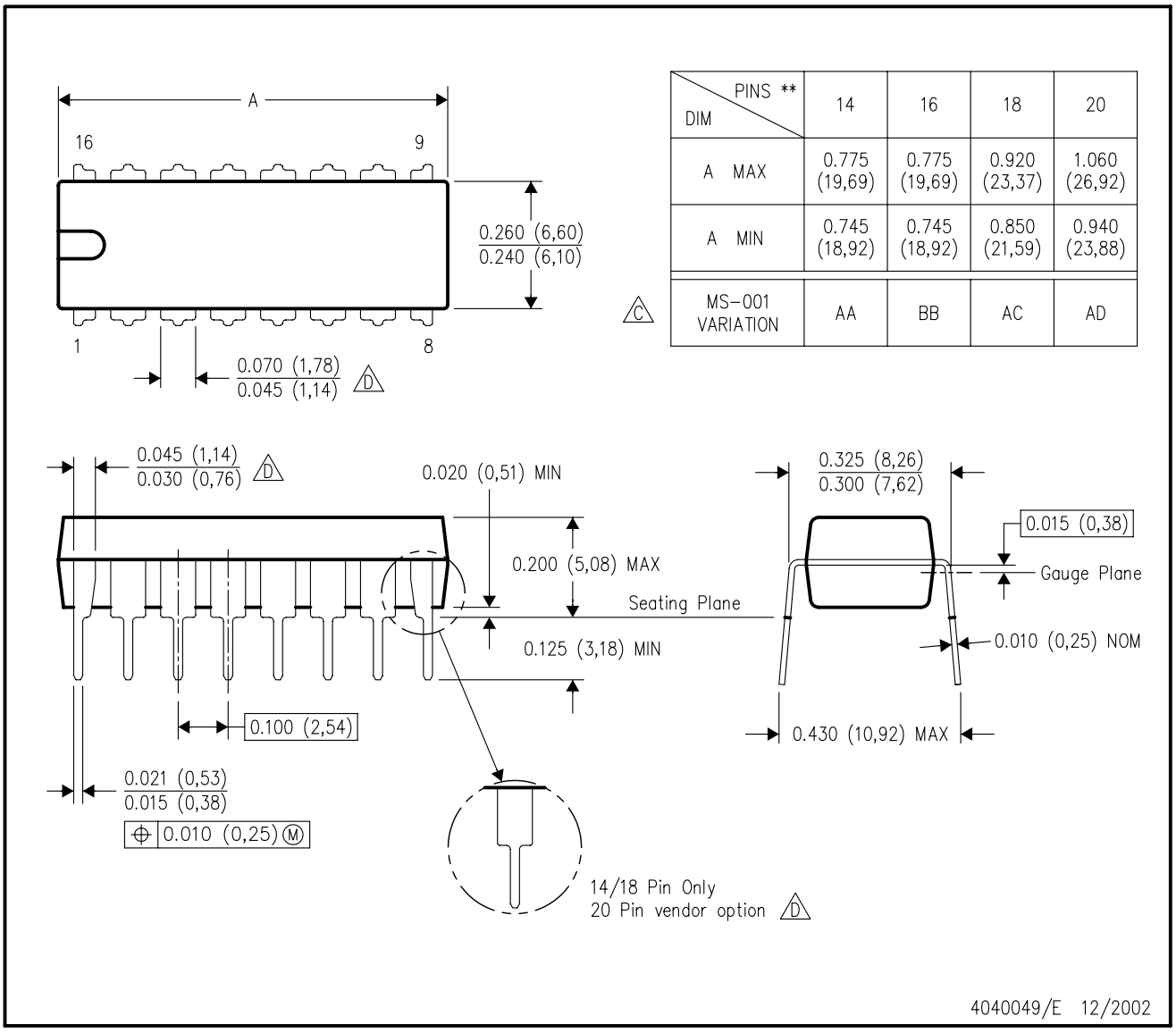

DIM \ PINS **	14	16	18	20
A MAX	0.775 (19,69)	0.775 (19,69)	0.920 (23,37)	1.060 (26,92)
A MIN	0.745 (18,92)	0.745 (18,92)	0.850 (21,59)	0.940 (23,88)
MS–001 VARIATION (C)	AA	BB	AC	AD

NOTES:
A. All linear dimensions are in inches (millimeters).
B. This drawing is subject to change without notice.
C. Falls within JEDEC MS–001, except 18 and 20 pin minimum body length (Dim A).
D. The 20 pin end lead shoulder width is a vendor option, either half or full width.

IMPORTANT NOTICE AND DISCLAIMER

TI PROVIDES TECHNICAL AND RELIABILITY DATA (INCLUDING DATA SHEETS), DESIGN RESOURCES (INCLUDING REFERENCE DESIGNS), APPLICATION OR OTHER DESIGN ADVICE, WEB TOOLS, SAFETY INFORMATION, AND OTHER RESOURCES “AS IS” AND WITH ALL FAULTS, AND DISCLAIMS ALL WARRANTIES, EXPRESS AND IMPLIED, INCLUDING WITHOUT LIMITATION ANY IMPLIED WARRANTIES OF MERCHANTABILITY, FITNESS FOR A PARTICULAR PURPOSE OR NON-INFRINGEMENT OF THIRD PARTY INTELLECTUAL PROPERTY RIGHTS.

These resources are intended for skilled developers designing with TI products. You are solely responsible for (1) selecting the appropriate TI products for your application, (2) designing, validating and testing your application, and (3) ensuring your application meets applicable standards, and any other safety, security, regulatory or other requirements.

These resources are subject to change without notice. TI grants you permission to use these resources only for development of an application that uses the TI products described in the resource. Other reproduction and display of these resources is prohibited. No license is granted to any other TI intellectual property right or to any third party intellectual property right. TI disclaims responsibility for, and you will fully indemnify TI and its representatives against, any claims, damages, costs, losses, and liabilities arising out of your use of these resources.

TI’s products are provided subject to TI’s Terms of Sale or other applicable terms available either on ti.com or provided in conjunction with such TI products. TI’s provision of these resources does not expand or otherwise alter TI’s applicable warranties or warranty disclaimers for TI products.

TI objects to and rejects any additional or different terms you may have proposed.

Mailing Address: Texas Instruments, Post Office Box 655303, Dallas, Texas 75265
Copyright © 2025, Texas Instruments Incorporated