CC3100MOD SimpleLink™ Wi-Fi CERTIFIED™ Network Processor Internet-of-Things Module Solution for MCU Applications

1 Features

- The CC3100MOD is a Wi-Fi® module consisting of the CC3100R11MRGC Wi-Fi network processor and power management subsystems. This fully integrated module includes all required clocks, serial peripheral interface (SPI) flash, and passives.
- Modular FCC, IC, TELEC, and CE certifications save customer effort, time, and money
- Wi-Fi CERTIFIED™ modules, with ability to request certificate transfer for Wi-Fi Alliance members
- Wi-Fi network processor subsystem
  - Featuring Wi-Fi Internet-on-a chip™ circuits
  - Dedicated Arm® microcontroller (MCU)

    Completely offloads Wi-Fi and Internet protocols from the external MCU
  - Wi-Fi driver and multiple Internet protocols in ROM
  - 802.11 b/g/n radio, baseband, and medium access control (MAC), Wi-Fi driver, and supplicant
  - TCP/IP stack
    - Industry-standard BSD socket application programming interfaces (APIs)
    - 8 simultaneous TCP or UDP sockets
    - 2 of the 8 sockets can be TLS and SSL sockets
  - Powerful crypto engine for fast, secure Wi-Fi and Internet connections with 256-bit AES encryption for TLS and SSL connections
  - Station, AP, and Wi-Fi Direct® modes
  - WPA2 Personal and Enterprise Security
  - SimpleLink™ connection manager for autonomous and fast Wi-Fi connections
  - SmartConfig™ technology, AP mode, and WPS2 for easy and flexible Wi-Fi provisioning
  - TX power
    - 17 dBm at 1 DSSS
    - 17.25 dBm at 11 CCK
    - 13.5 dBm at 54 OFDM
  - RX sensitivity
    - –94.7 dBm at 1 DSSS
    - –87 dBm at 11 CCK
    - –73 dBm at 54 OFDM
  - Application throughput
    - UDP: 16 Mbps
    - TCP: 13 Mbps
- Host interface
  - Wide range of power supply (2.3 to 3.6 V)
  - Interfaces with 8-, 16-, and 32-bit MCU or ASICs over a SPI or UART interface
  - Low footprint host driver: less than 6KB
  - Supports RTOS and no-OS applications
- Power-management subsystem
  - Integrated DC-DC converter suports a wide range of supply voltage:
    - Direct battery mode: 2.3 V to 3.6 V
  - Low power consumption at 3.6 V
    - Hibernate with real-time clock (RTC): 7 µA
    - Standby: 140 µA
    - RX traffic: 54 mA at 54 OFDM
    - TX traffic: 223 mA at 54 OFDM
- Integrated components on module
  - 40.0-MHz crystal with internal oscillator
  - 32.768-kHz crystal (RTC)
  - 8-Mbit SPI serial flash
  - RF filter and passive components
- 1.27-mm pitch, 63-pin, 20.5-mm × 17.5-mm LGA package for easy assembly and low-cost PCB design
- Operating temperature range: –20°C to +70°C
- Module supports SimpleLink Developers Ecosystem

An IMPORTANT NOTICE at the end of this data sheet addresses availability, warranty, changes, use in safety-critical applications, intellectual property matters and other important disclaimers. PRODUCTION DATA.

2 Applications

For Internet-of-Things (IoT) applications, such as:

- Cloud connectivity
- Internet gateway
- Home automation
- Home appliances
- Access control
- Security systems
- Smart energy
- Industrial control
- Smart plug and metering
- Wireless audio
- IP network sensor nodes
- Wearables

3 Description

Add Wi-Fi® to low-cost, low-power MCU for IoT applications. The CC3100MOD is an FCC, IC, CE, and Wi-Fi CERTIFIED™ module that is part of the SimpleLink™ Wi-Fi family, which dramatically simplifies the implementation of Internet connectivity. The CC3100MOD integrates all protocols for Wi-Fi and Internet, which greatly minimize host MCU software requirements. With built-in security protocols, the CC3100MOD solution provides a robust and simple security experience. Additionally, the CC3100MOD is a complete platform solution including various tools and software, sample applications, user and programming guides, reference designs, and the TI E2E™ support community. The CC3100MOD is available in an LGA package that is easy to lay out with all required components including serial Flash, RF filter, crystal, and passive components that are fully integrated.

The Wi-Fi network processor subsystem features Wi-Fi Internet-on-a chip™ circuitry and contains an additional dedicated Arm® MCU that off-loads the host MCU. This subsystem includes an 802.11b/g/n radio, baseband, and MAC with a powerful crypto engine for fast, secure Internet connections with 256-bit encryption. The CC3100MOD module supports station, access point, and Wi-Fi direct modes. The module supports WPA2 personal and enterprise security and also WPS 2.0. This subsystem includes embedded TCP/IP, TLS/SSL stacks, an HTTP server, and multiple Internet protocols.

The power-management subsystem includes an integrated DC-DC converter with support for a wide range of supply voltages. This subsystem enables low-power consumption modes such as hibernate with RTC , which requires approximately 7 µA. The CC3100MOD module can connect to any 8-, 16-, or 32-bit MCU over the SPI or UART Interface. The device driver minimizes the host memory footprint requirements of less than 7KB of code memory and 700B of RAM for a TCP client application.

Table 3-1. Module Information

PART NUMBER(1)	PACKAGE	BODY SIZE
CC3100MODR11MAMOB	MOB (63)	20.5 mm × 17.5 mm

(1) For more information, see Section 13.

Copyright © 2020 Texas Instruments Incorporated

4 Functional Block Diagrams

Figure 4-1 shows the functional block diagram of the CC3100MOD module.

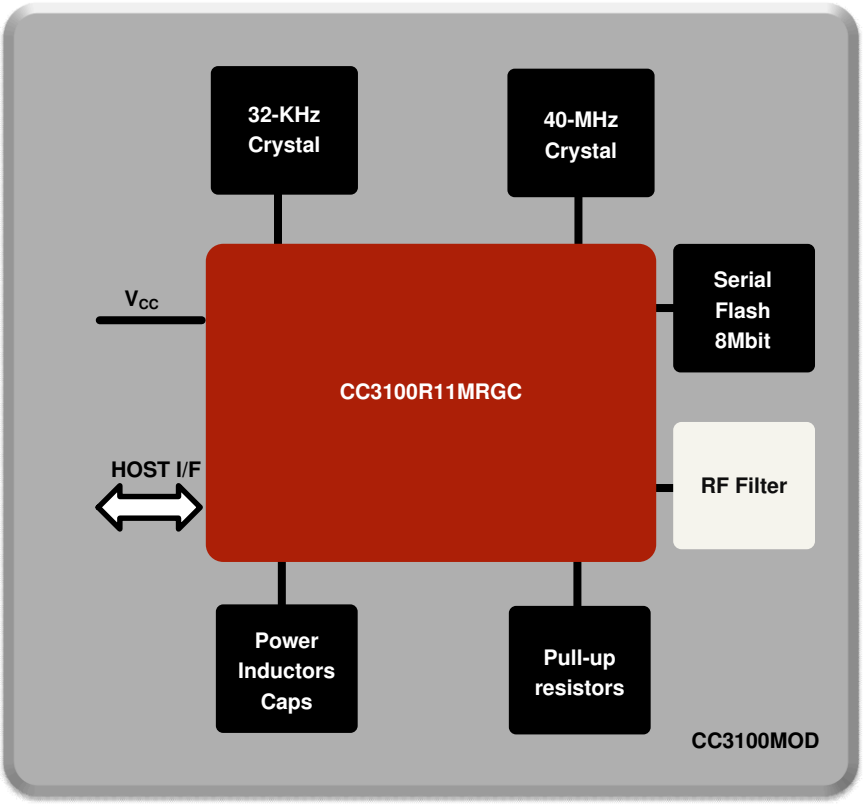

Figure 4-1. CC3100MOD Functional Block Diagram

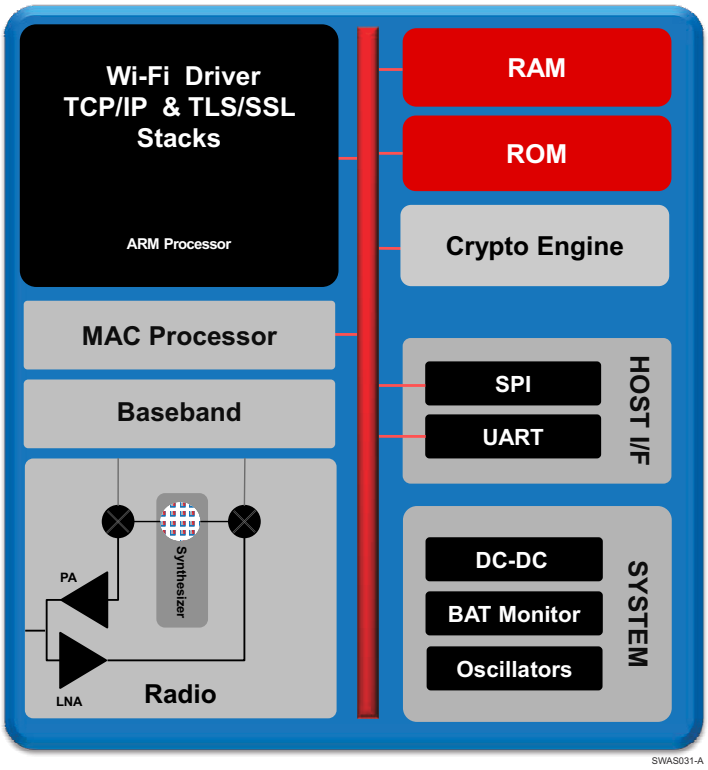

Figure 4-2. CC3100 Hardware Overview

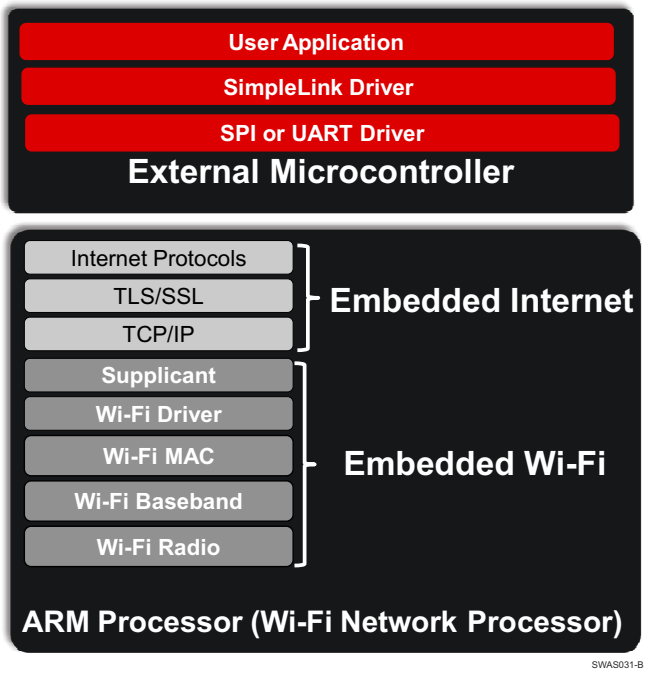

Figure 4-3. CC3100 Software Overview

Copyright © 2020 Texas Instruments Incorporated

5 Functional Block Diagrams

Figure 5-1 shows the functional block diagram of the CC3100MOD module.

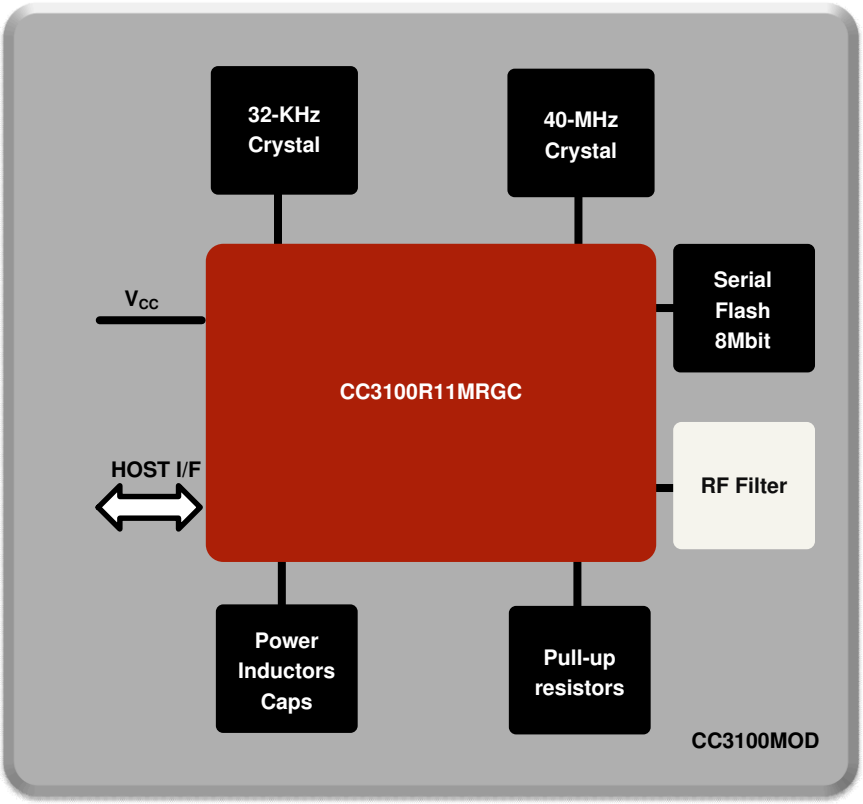

Figure 5-1. CC3100MOD Functional Block Diagram

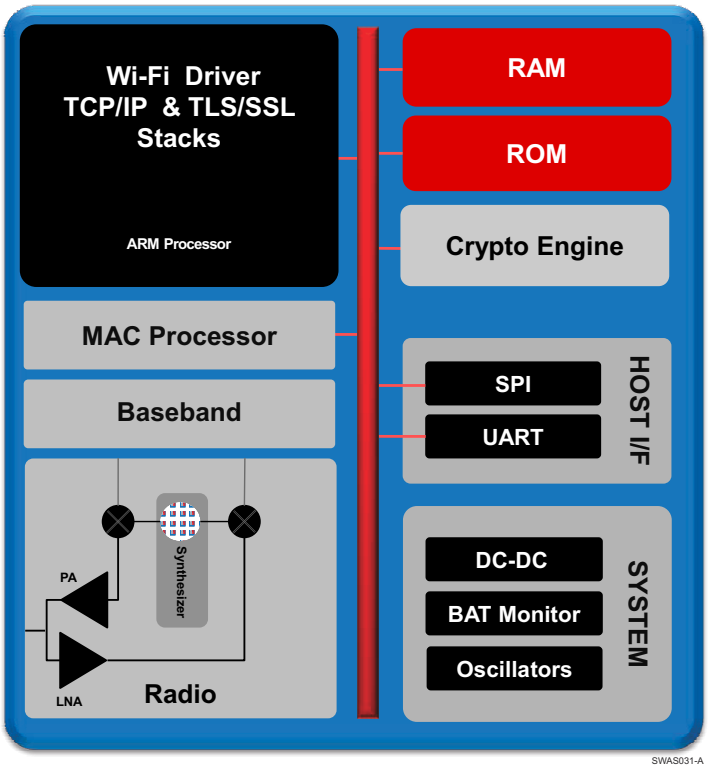

Figure 5-2. CC3100 Hardware Overview

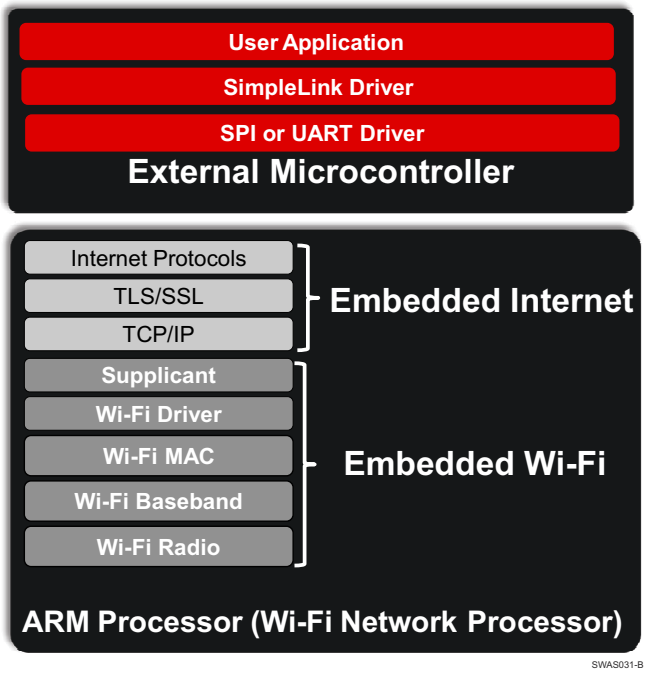

Figure 5-3. CC3100 Software Overview

Copyright © 2020 Texas Instruments Incorporated

Table of Contents

1 Features....1
2 Applications....2
3 Description....2
4 Functional Block Diagrams....3
5 Functional Block Diagrams....5
6 Revision History....7
7 Terminal Configuration and Functions....9
7.1 CC3100MOD Pin Diagram....9
7.2 Pin Attributes....10
8 Specifications....12
8.1 Absolute Maximum Ratings....12
8.2 ESD Ratings....12
8.3 Power-On Hours (POH)....12
8.4 Recommended Operating Conditions....12
8.5 Power Consumption Summary....13
8.6 TX Power and IBAT versus TX Power Level Settings....13
8.7 Brownout and Blackout Conditions....15
8.8 Electrical Characteristics (3.3 V, 25°C)....16
8.9 WLAN RF Characteristics....16
8.10 Reset Requirement....17
8.11 Thermal Resistance Characteristics for MOB Package....17
8.12 Timing and Switching Characteristics....18
8.13 Host UART....21
9 Detailed Description....23
9.1 Overview....23
9.2 Module Features....23
9.3 Functional Block Diagram....23
9.4 Wi-Fi Network Processor Subsystem....24
9.5 Power-Management Subsystem....25
9.6 Low-Power Operating Modes....25
10 Applications, Implementation, and Layout....27
10.1 Reference Schematics....28
10.2 Design Requirements....29
10.3 Layout Recommendations....30
11 Environmental Requirements and Specifications....34
11.1 Temperature....34
11.2 Handling Environment....34
11.3 Storage Condition....34
11.4 Baking Conditions....34
11.5 Soldering and Reflow Condition....35
12 Device and Documentation Support....36
12.1 Device Support....36
12.2 Documentation Support....36
12.3 Trademarks....37
12.4 Electrostatic Discharge Caution....37
12.5 Glossary....37
13 Mechanical, Packaging, and Orderable Information....38
13.1 Mechanical Drawing....38
13.2 Package Option....40

6 Revision History

NOTE: Page numbers for previous revisions may differ from page numbers in the current version.

Changes from December 6, 2014 to September 22, 2020 (from Revision A () to Revision B ())	Page
• Updated the numbering format for tables, figures, and cross-references throughout the document	1
• Updated and changed VBAT or Wide Voltage Mode to Direct Battery	1
• Updated and changed featured VBAT range from "2.3 to 3.63 V" to "2.3 to 3.6 V"	1
• Changed TX current from 150 mA at 54OFDM to 223 mA at 54 OFDM	1
• Changed MODULE PIN DESCRIPTION for PIN NO. 47	10
• Changed from *Handling Ratings* table to *ESD Ratings* table	12
• Deleted Reset Requirements table	13
• Added graphs representing TX Power and IBAT vs TX Power Level Settings (1 DSSS, 6 OFDM, and 54 OFDM)	13
• Changed *Brownout and Blackout Conditions* section	15
• Added *Electrical Characteristics*	16
• Changed V_{OH} in *Electrical Characteristics (3.3 V, 25°C)*	16
• Changed V_{OL} in *Electrical Characteristics (3.3 V, 25°C)*	16
• Changed the Low-level sink current V_{OH} value from: 0.4 to: 0.6 in Section 8.8	16
• Deleted V_{OH} and V_{OL} from the pullup and pulldown current entries in Section 8.8	16
• Changed Figure 8-8	19
• Changed minimum clock period to 50 ns, maximum clock low period to 25 ns, and maximum clock high period to 25 ns in *Host SPI Interface Timing Parameters*	19
• Changed minimum clock period to 50 ns, maximum clock low period to 25 ns, and maximum clock high period to 25 ns in *Host SPI Interface Timing Parameters*	19

- Added clock frequency at VBAT = 3.3 V and VBAT ≤ 2.1 V in *Host SPI Interface Timing Parameters* 19
- Added description for nHIB pin in Table 8-3 20
- Changed HOST_SPI_CLK from 24 MHz to 20 MHz in Table 8-3 20
- Added Section 8.13, *Host UART* 21
- Added Section 9.1, *Overview* 23
- Changed Figure 9-1 23
- Added Section 9.4, *Wi-Fi Network Processor Subsystem* 24
- Added Table 9-1 24
- Changed in Section 9.5, *Power Management Architecture* 25
- Added Section 9.6, *Low-Power Operating Modes* 25
- Changed LPDS wakeup time from 10 ms to < 3 ms in Section 9.6.1, *Low-Power Deep Sleep* 25
- Added Note 1 for Figure 10-1 28
- Changed the new *Device and Documentation Support* section..... 36
- Added NOTE to *Mechanical Drawing* 38
- Updated reel quantities in Section 13.2 40
- Changed Package Qty value for CC3100MODR11MAMOBR in Section 13.2.1 41
- Changed SPQ value for CC3100MODR11MAMOBR throughout Section 13.2.2 42
- Changed Pin1 Quadrant values in Section 13.2.2 42

Copyright © 2020 Texas Instruments Incorporated

7 Terminal Configuration and Functions

7.1 CC3100MOD Pin Diagram

Figure 7-1 shows the pin diagram for the CC3100MOD device.

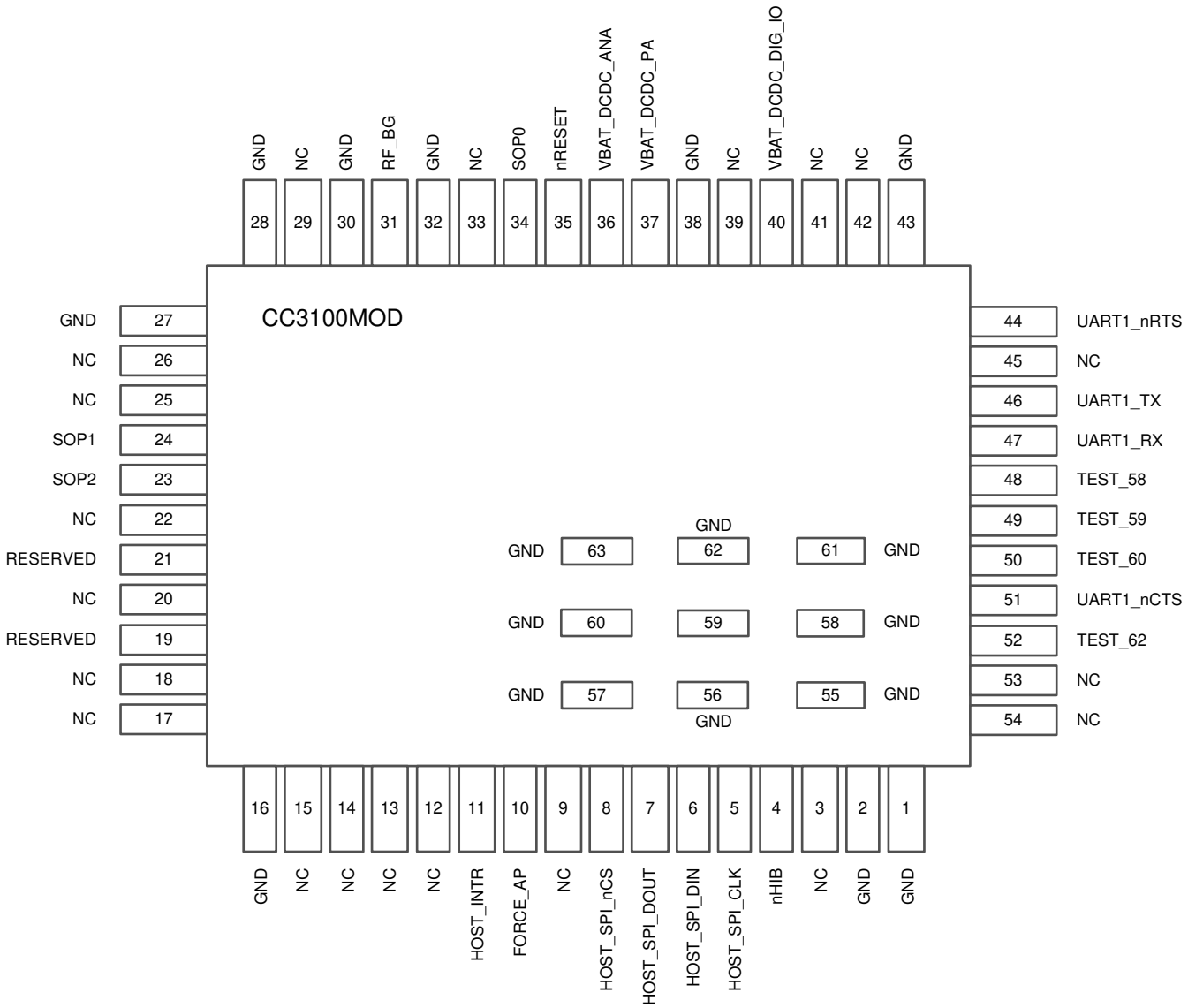

Figure 7-1 shows the approximate location of pins on the module. For the actual mechanical diagram, refer to Section 13.

Figure 7-1. CC3100MOD Pin Diagram Bottom View

7.2 Pin Attributes

Table 7-1 lists the pin descriptions of the CC3100MOD module.

Note

If an external device drives a positive voltage to signal pads when the CC3100MOD is not powered, DC current is drawn from the other device. If the drive strength of the external device is adequate, an unintentional wakeup and boot of the CC3100MOD can occur. To prevent current draw, TI recommends one of the following:

- All devices interfaced to the CC3100MOD must be powered from the same power rail as the CC3100MOD.
- Use level-shifters between the CC3100MOD and any external devices fed from other independent rails.
- The nRESET pin of the CC3100MOD must be held low until the V_{BAT} supply to the device is driven and stable. Leaving the nRESET pin unconnected ensures **this (_____)** automatically due to the internal RC circuit.

Table 7-1. Module Pin Attributes

PIN[(1)]	DEFAULT FUNCTION	TYPE	DESCRIPTION
1	GND	–	Ground
2	GND	–	Ground
3	NC	–	Reserved. Do not connect.
4	nHIB	I	Hibernate signal, active low. Refer to Figure 8-7.
5	HOST_SPI_CLK	I	Host interface SPI clock
6	HOST_SPI_DIN	I	Host interface SPI data input
7	HOST_SPI_DOUT	O	Host interface SPI data output
8	HOST_SPI_nCS	I	Host interface SPI chip select (active low)
9	NC	–	Reserved. Do not connect.
10	NC	–	Reserved. Do not connect.
11	HOST_INTR	O	Interrupt output
12	NC	–	Reserved. Do not connect.
13	FLASH_SPI_MISO	I	Serial flash interface: SPI data in (active high)
14	FLASH_SPI_nCS_IN	O	Serial flash interface: SPI chip select (active low)
15	FLASH_SPI_CLK	O	Serial flash interface: SPI clock
16	GND	–	Ground
17	FLASH_SPI_MOSI	O	Serial flash interface: SPI data out
18	NC	–	Reserved. Do not connect.
19	RESERVED	–	Reserved. Do not connect.
20	NC	–	Unused. Do not connect.
21	RESERVED	–	Add 100-kΩ external pulldown resistor. Not adding this resistor can lead to higher current in LPDS mode.
22			
23	SOP2/TCXO_EN	–	Add 10-kΩ pulldown to ground.
24	SOP1	–	Add 100k pulldown to ground.
25	NC	–	Reserved. Do not connect.
26	NC	–	Reserved. Do not connect.
27, 28	GND	–	Ground
29	NC	–	Do not connect.
30	GND	–	Ground. Reference for RF signal.

Copyright © 2020 Texas Instruments Incorporated

Table 7-1. Module Pin Attributes (continued)

PIN[(1)]	DEFAULT FUNCTION	TYPE	DESCRIPTION
31	RF_BG	I/O	2.4-GHz RF input/output
32	GND	–	Ground. Reference for RF signal.
33	NC	–	Reserved. Do not connect.
34	SOP0	–	Add 100k pulldown to ground.
35	nRESET	I	Power on reset. Does not require external RC circuit.
36	VBAT_RESET	–	Power supply to internal pull-up resistor on nRESET pin (2.3 V to 3.6 V)
37	VBAT1	–	Power supply for the module, can be connected to battery (2.3 V to 3.6 V).
38	GND	–	Ground
39	NC	–	To be left unconnected. Used for prototype samples only.
40	VBAT2	–	Power supply for the module, can be connected to battery (2.3 V to 3.6 V).
41, 42	NC	–	Reserved. Do not connect.
43	GND	–	Ground
44	UART1_nRTS	O	UART request to send, connect to external test point. Used for on-module flash reprogramming. Add 100-kΩ pulldown to ground when using UART for host interface.
45	NC	–	Reserved. Do not connect.
46	UART1_TX	O	UART transmit, connect to external test point. Used for on-module flash reprogramming.
47	UART1_RX	I	UART receive, connect to external test point. Used for on-module flash reprogramming. TI recommends using a 100-kΩ pullup resistor to save a few tens of µA in hibernate state.
48	TEST_58	O	Connect to external test point.
49	TEST_59	I	Connect to external test point.
50	TEST_60	O	Connect to external test point.
51	UART1_nCTS	I	UART clear to send, connect to external test point. Used for on-module flash reprogramming.
52	TEST_62	O	Connect to external test point.
53, 54	NC	–	Reserved. Do not connect.
55, 56, 57, 58, 59, 60, 61, 62, 63	GND	–	Thermal Ground

(1) Using a configuration file stored on flash, the vendor can optionally block any possibility of bringing up AP using the FORCE_AP pin.

Copyright © 2020 Texas Instruments Incorporated

8 Specifications

8.1 Absolute Maximum Ratings

These specifications indicate levels where permanent damage to the module can occur. Functional operation is not ensured under these conditions. Operation at absolute maximum conditions for extended periods can adversely affect long-term reliability of the module (1) (2).

		MIN	TYP	MAX	UNIT
V_{BAT} and VIO	Respect to GND	–0.5	3.3	3.8	V
Digital I/O		–0.5		V_{BAT} + 0.5	V
RF pin (Pin 31)		–0.5		2.1	V
Analog pins		–0.5		2.1	V
Operating temperature, T_A		–40		85	°C
Storage temperature, T_{stg}		–55		125	°C
Junction temperature, T_j				104	°C

(1) Stresses beyond those listed under *Absolute Maximum Ratings* may cause permanent damage to the device. These are stress ratings only, and functional operation of the device at these or any other conditions beyond those indicated under *Recommended Operating Conditions* is not implied. Exposure to absolute-maximum-rated conditions for extended periods may affect device reliability.
(2) All voltage values are with respect to V_{SS}, unless otherwise noted.

8.2 ESD Ratings

				VALUE	UNIT
V_{ESD}	Electrostatic discharge (ESD) performance	Human body model (HBM), per ANSI/ESDA/JEDEC JS001(1)		±1000	V
		Charged device model (CDM), per JESD22-C101(2)	All pins	±250	

(1) JEDEC document JEP155 states that 500-V HBM allows safe manufacturing with a standard ESD control process.
(2) JEDEC document JEP157 states that 250-V CDM allows safe manufacturing with a standard ESD control process.

8.3 Power-On Hours (POH)

This information is provided solely for your convenience and does not extend or modify the warranty provided under TI's standard terms and conditions for TI semiconductor products.

OPERATING CONDITION	JUNCTION TEMPERATURE (T_j)	POH
20% active mode 80% sleep mode	$T_{Ambient}$ up to 85°C(2)	17500(1)

(1) The CC3100MOD device can be operated reliably for 10 years.
(2) The TX duty cycle (power amplifier ON time) is assumed to be 10% of the device POH. Of the remaining 90% of the time, the device can be in any other state.

8.4 Recommended Operating Conditions

Function operation is not ensured outside this limit, and operation outside this limit for extended periods can adversely affect long-term reliability of the module(1) (2).

	MIN	TYP	MAX	UNIT
V_{BAT} and VIO	2.3	3.3	3.6	V
Operating temperature	–20	25	70	°C
Ambient thermal slew	–20		20	°C/minute

(1) Operating temperature is limited by crystal frequency variation.
(2) To ensure WLAN performance, the ripple on the power supply must be less than ±300 mV. The ripple should not cause the supply to fall below the brown-out voltage.

Copyright © 2020 Texas Instruments Incorporated

8.5 Power Consumption Summary

T_A = 25°C, V_{BAT} = 3.6 V

PARAMETER	TEST CONDITIONS(1) (2)		MIN	TYP	MAX	UNIT
TX	1 DSSS	TX power level = 0		272		mA
		TX power level = 4		188		
	6 OFDM	TX power level = 0		248		
		TX power level = 4		179		
	54 OFDM	TX power level = 0		223		
		TX power level = 4		160		
RX(3)	1 DSSS			53		mA
	54 OFDM			53		
Idle connected(4)				0.715		mA
LPDS				0.140		mA
Hibernate				7		µA
Peak calibration current(3) (5)	V_{BAT} = 3.3 V			450		mA
	V_{BAT} = 2.3 V			620		

(1) TX power level = 0 implies maximum power (see Figure 8-1, Figure 8-2, and Figure 8-3). TX power level = 4 implies output power backed off approximately 4 dB.
(2) The CC3100 system is a constant power-source system. The active current numbers scale inversely on the V_{BAT} voltage supplied.
(3) The RX current is measured with a 1-Mbps throughput rate.
(4) DTIM = 1
(5) The complete calibration can take up to 17 mJ of energy from the battery over a time of 24 ms. In default mode, calibration is performed sparingly, typically when coming out of Hibernate and only if the temperature has changed by more than 20°C, or the time elapsed from prior calibration is greater than 24 hours.

8.6 TX Power and IBAT versus TX Power Level Settings

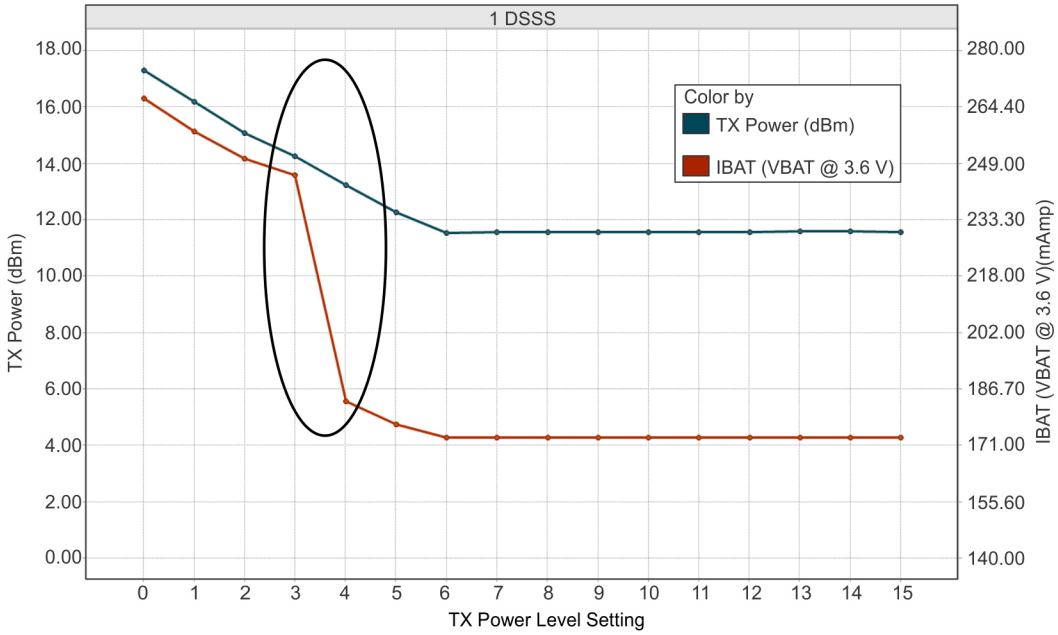

Note: The area enclosed in the circle represents a significant reduction in current during transition from TX power level 3 to 4. In the case of lower range requirements (13-dBm output power), TI recommends using TX power level 4 to reduce the current.

Figure 8-1. TX Power and IBAT vs TX Power Level Settings (1 DSSS)

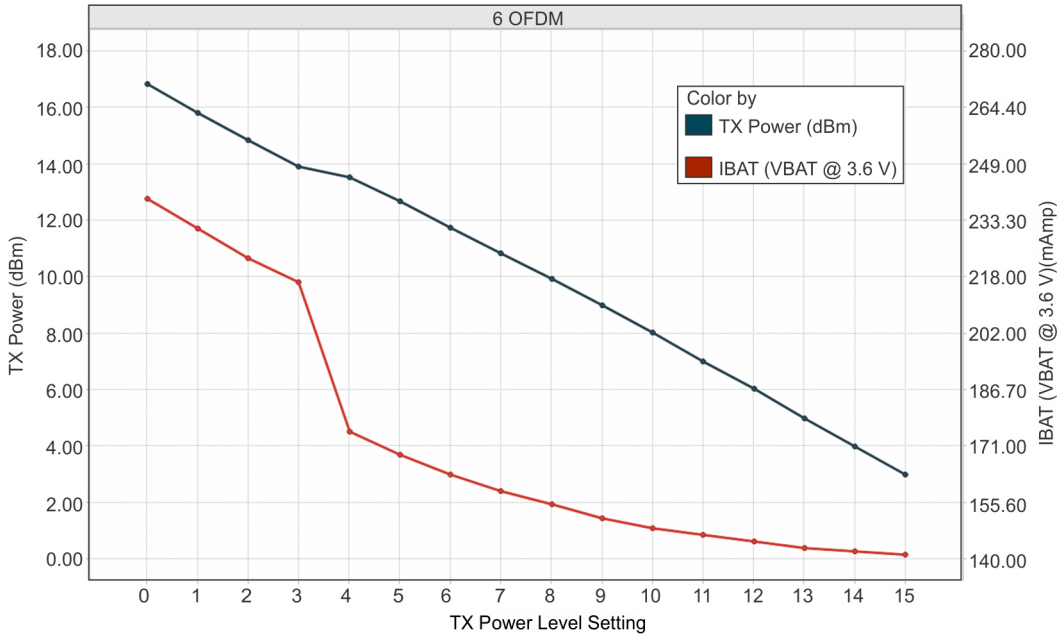

Figure 8-2. TX Power and IBAT vs TX Power Level Settings (6 OFDM)

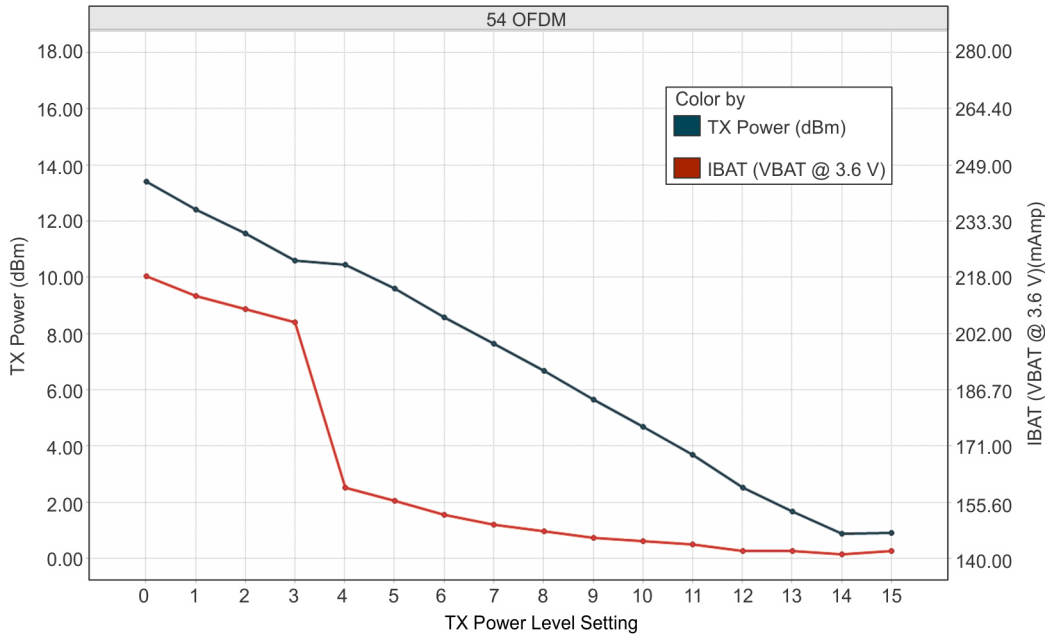

Figure 8-3. TX Power and IBAT vs TX Power Level Settings (54 OFDM)

Copyright © 2020 Texas Instruments Incorporated

8.7 Brownout and Blackout Conditions

The module enters a brownout condition when the input voltage dips below $V_{BROWNOUT}$ (see Figure 8-4 and Figure 8-5). This condition must be considered during design of the power supply routing, especially if operating from a battery. High-current operations, such as a TX packet or any external activity (not necessarily related directly to networking) can cause a drop in the supply voltage, potentially triggering a brownout condition. The resistance includes the internal resistance of the battery, contact resistance of the battery holder (four contacts for a 2× AA battery), and the wiring and PCB routing resistance.

Note

When the device is in the Hibernate state, brownout is not detected; only blackout is in effect during the Hibernate state.

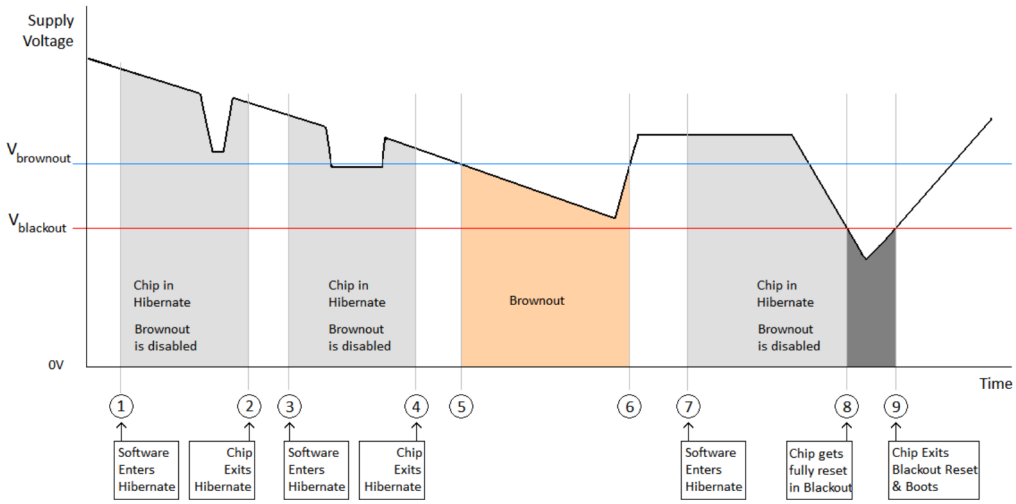

Figure 8-4. Brownout and Blackout Levels (1 of 2)

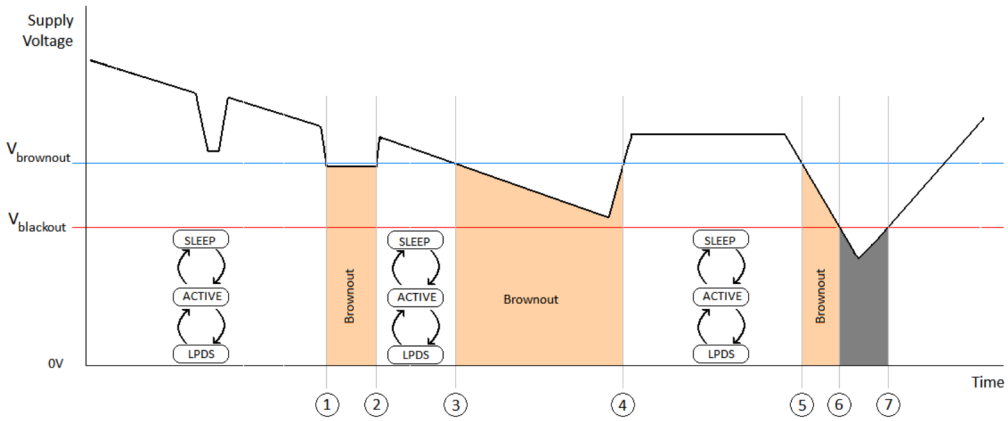

Figure 8-5. Brownout and Blackout Levels (2 of 2)

In the brownout condition, all sections of the CC3100MOD (including the 32-kHz RTC) shut down except for the Hibernate module, which remains on. The current in this state can reach approximately 400 µA. The blackout condition is equivalent to a hardware reset event in which all states within the module are lost. $V_{brownout}$ = 2.1 V and $V_{blackout}$ = 1.67 V

8.8 Electrical Characteristics (3.3 V, 25°C)

over operating free-air temperature range (unless otherwise noted)

PARAMETER		TEST CONDITIONS	DRIVE SETTING STRENGTH	MIN	TYP	MAX	UNIT
C_{IN}	Pin capacitance				4		pF
V_{IH}	High-level input voltage			0.65 × VDD		VDD + 0.5 V	V
V_{IL}	Low-level input voltage			–0.5		0.35 × VDD	V
I_{IH}	High-level input current				5		nA
I_{IL}	Low-level input current				5		nA
V_{OH}	High-level output voltage (V_{DD} = 3.0 V)	V_{CC} = 3 V, I_{OL} = 2 mA	2 mA	2.4			V
V_{OL}	Low-level output voltage (V_{DD} = 3.0 V)	V_{CC} = 3 V, I_{OL} = 2 mA	2 mA			0.4	V
I_{OH}	High-level source current, V_{OH} = 2.4			6			mA
I_{OL}	Low-level sink current, V_{OH} = 0.6			6			mA
PIN INTERNAL PULLUP and PULLDOWN (25°C)							
I_{OH}	Pullup current, (V_{DD} = 3.0 V)			5		10	µA
I_{OL}	Pulldown current, (V_{DD} = 3.0 V)			5			µA
V_{IL}	nRESET(1)				0.6		V

(1) The nRESET pin must be held below 0.6 V for the module to register a reset.

8.9 WLAN RF Characteristics

8.9.1 WLAN Receiver Characteristics

T_A = 25°C, V_{BAT} = 2.3 to 3.6 V. Parameters measured at module pin on channel 7 (2442 MHz).

PARAMETER	RATE	MIN	TYP	MAX	UNIT
Sensitivity (8% PER for 11b rates, 10% PER for 11g or 11n rates) (10% PER)(1)	1 DSSS		–94.7		dBm
	2 DSSS		–92.6		
	11 CCK		–87.0		
	6 OFDM		–89.0		
	9 OFDM		–88.0		
	18 OFDM		–85.0		
	36 OFDM		–79.5		
	54 OFDM		–73.0		
	MCS7 (Mixed Mode)		–69.0		
Maximum input level (10% PER)	802.11b		–3.0		dBm
	802.11g		–9.0		

(1) Sensitivity is 1-dB worse on channel 13 (2472 MHz).

8.9.2 WLAN Transmitter Characteristics

T_A = 25°C, V_{BAT} = 2.3 to 3.6 V. Parameters measured at module pin on channel 7 (2442 MHz)(1).

PARAMETER	RATE	MIN	TYP	MAX	UNIT
Max RMS Output Power measured at 1 dB from IEEE spectral mask or EVM	1 DSSS		17		dBm
	2 DSSS		17		
	11 CCK		17.25		

Copyright © 2020 Texas Instruments Incorporated

T_A = 25°C, V_{BAT} = 2.3 to 3.6 V. Parameters measured at module pin on channel 7 (2442 MHz)[(1)].

PARAMETER	RATE	MIN	TYP	MAX	UNIT
	6 OFDM		16.25		
	9 OFDM		16.25		
	18 OFDM		16		
	36 OFDM		15		
	54 OFDM		13.5		
	MCS7 (Mixed Mode)		12		
Transmit center frequency accuracy		–20		20	ppm

(1) Channel-to-channel variation is up to 2 dB. The edge channels (2412 MHz and 2462 MHz) have reduced TX power to meet FCC emission limits.

8.10 Reset Requirement

PARAMETER		MIN	TYP	MAX	UNIT
V_{IH}	Operation mode level		0.65 × V_{BAT}		V
V_{IL}	Shutdown mode level[(1)]	0	0.6		V
	Minimum time for nReset low for resetting the module	5			ms
T_r and T_f	Rise and fall times		20		µs

(1) The nRESET pin must be held below 0.6 V for the module to register a reset.

8.11 Thermal Resistance Characteristics for MOB Package

NAME	DESCRIPTION	°C/W	AIR FLOW (m/s)
$R\Theta_{JC}$	Junction-to-case	9.08	0.00
$R\Theta_{JB}$	Junction-to-board	10.34	0.00
$R\Theta_{JA}$	Junction-to-free air	11.60	0.00
$R\Theta_{JMA}$	Junction-to-moving air	5.05	<1.00
Psi_{JT}	Junction-to-package top	9.08	0.00
Psi_{JB}	Junction-to-board	10.19	0.00

Copyright © 2020 Texas Instruments Incorporated

8.12 Timing and Switching Characteristics

8.12.1 Wake-Up Sequence

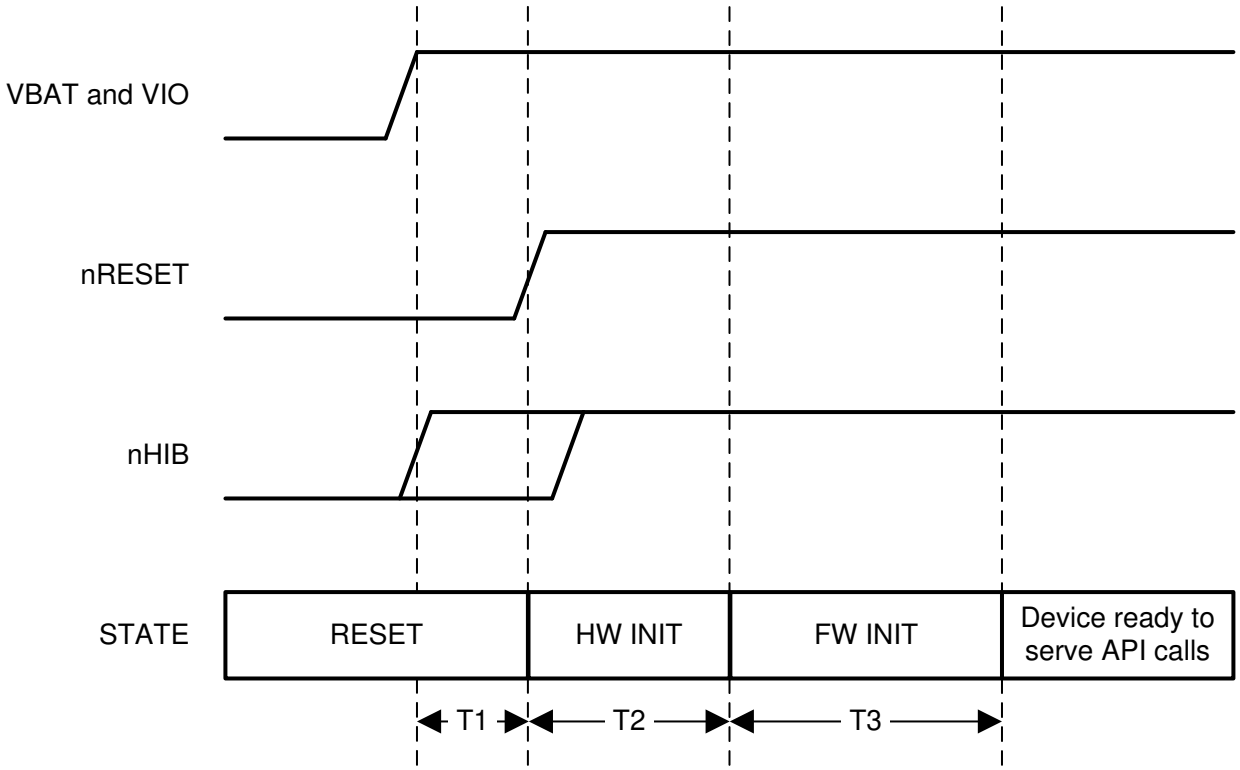

Figure 8-6. Wake-Up Sequence

Table 8-1. First-Time Power-Up and Reset Removal Timing Requirements (32-kHz XTAL)

ITEM	NAME	DESCRIPTION	MIN	TYP	MAX	UNIT
T1	Supply settling time	Depends on application board power supply, decap, and so on		3		ms
T2	Hardware wake-up time	—		25		ms
T3	Initialization time	32-kHz XTAL settling + firmware initialization time + radio calibration		1.35		s

Copyright © 2020 Texas Instruments Incorporated

8.12.2 Wake Up From Hibernate

Figure 8-7 shows the timing diagram for wake up from the hibernate state.

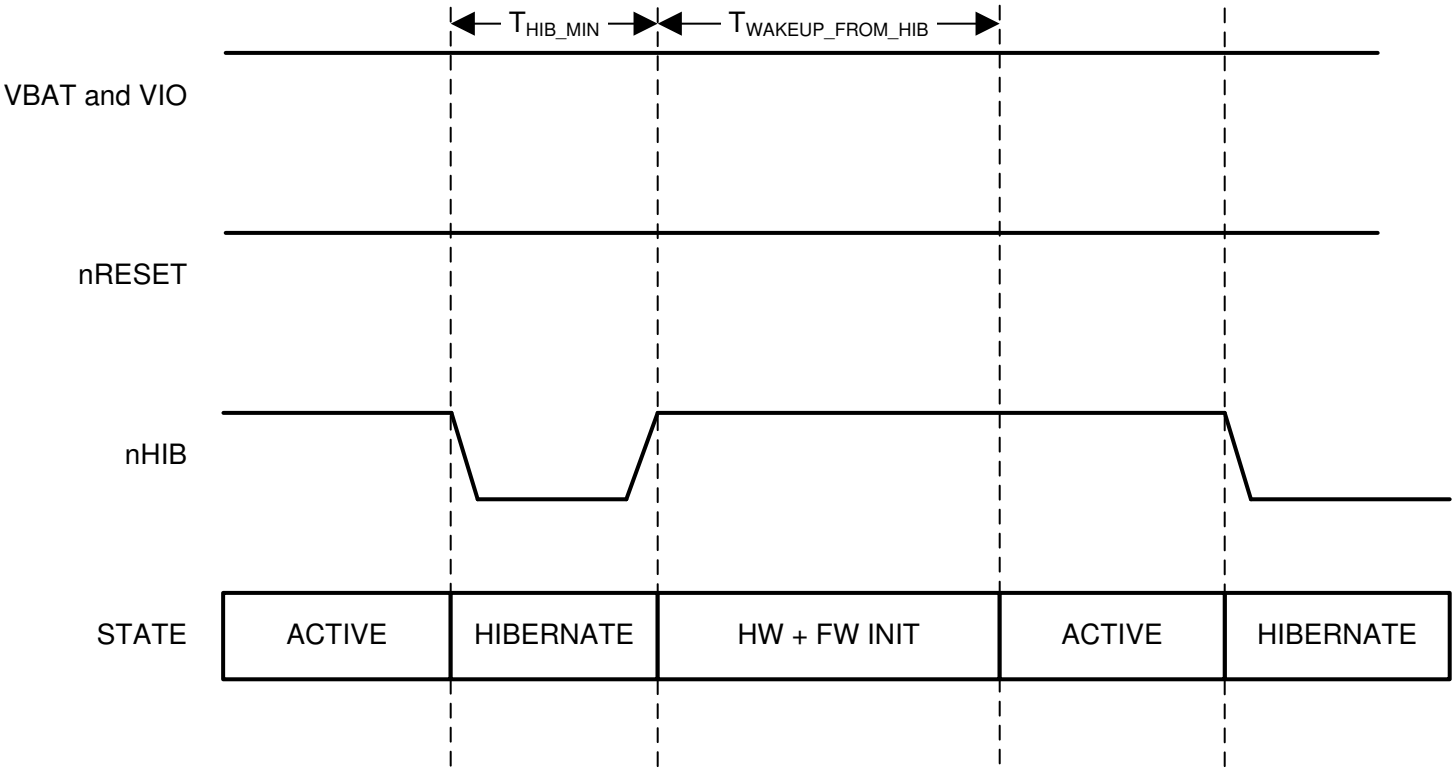

Figure 8-7. nHIB Timing Diagram

Note

The internal 32.768-kHz crystal oscillator is kept enabled by default when the chip goes to hibernate in response to nHIB being pulled low.

Section 8.12.2.1 describes the timing requirements for nHIB.

8.12.2.1 nHIB Timing Requirements (1)

ITEM	NAME	DESCRIPTION	MIN	TYP	MAX	UNIT
T_{hib_min}	Minimum hibernate time	Minimum LOW pulse width of nHIB	10			ms
$T_{wake_from_hib}$	Hardware wake-up time plus firmware initialization time	See(2)		50		ms

(1) Ensure that the nHIB low duration is not less than the specified width under all conditions, including power-ON, MCU hibernation, and so forth.

(2) If temperature changes by more than 20°C, initialization time from HIB can increase by 200 ms due to radio calibration.

8.12.3 Interfaces

This section describes the interfaces that are supported by the CC3100 module:

- Host SPI
- Host UART

8.12.3.1 Host SPI Interface Timing

Figure 8-8 shows the host SPI timing diagram.

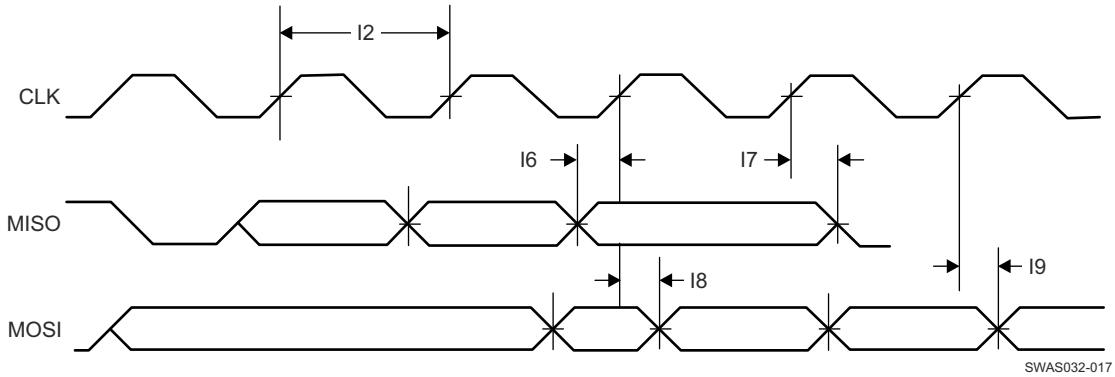

Figure 8-8. Host SPI Timing

Table 8-2. Host SPI Interface Timing Parameters

PARAMETER NUMBER	DESCRIPTION		MIN	MAX	UNIT
I1	F(1)	Clock frequency at V_{BAT} = 3.3 V		20	MHz
		Clock frequency at V_{BAT} ≤ 2.1 V		12	
I2	t_{clk} (1) (2)	Clock period	50		ns
I5	D(1)	Duty cycle	45%	55%	
I6	t_{IS} (1)	RX data setup time	4		ns
I7	t_{IH} (1)	RX data hold time	4		ns
I8	t_{OD} (1)	TX data output delay		20	ns
I9	t_{OH} (1)	TX data hold time		24	ns

(1) The timing parameter has a maximum load of 20 pf at 3.3 V.
(2) Ensure that nCS (active-low signal) is asserted 10 ns before the clock is toggled. The nCS signal can be deasserted 10 ns after the clock edge.

8.12.3.2 SPI Host Interface

The device interfaces to an external host using the SPI. The CC3100 device can interrupt the host using the HOST_INTR line to initiate the data transfer over the interface. The SPI host interface can work up to a speed of 20 MHz.

Figure 8-9 shows the SPI host interface.

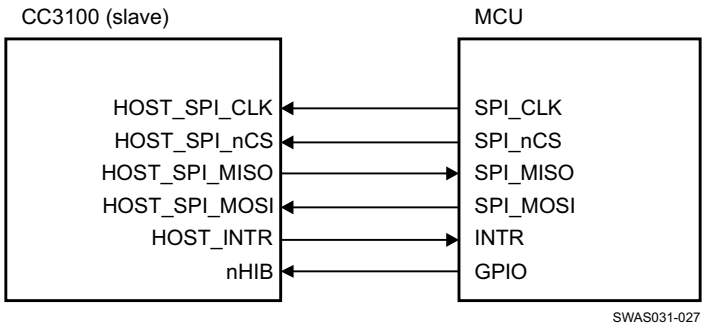

Figure 8-9. SPI Host Interface

Table 8-3 lists the SPI host interface pins.

Table 8-3. SPI Host Interface

PIN NAME	DESCRIPTION
HOST_SPI_CLK	Clock (up to 20 MHz) from MCU host to CC3100 device
HOST_SPI_nCS	CS (active low) signal from MCU host to CC3100 device

Copyright © 2020 Texas Instruments Incorporated

Table 8-3. SPI Host Interface (continued)

PIN NAME	DESCRIPTION
HOST_SPI_MOSI	Data from MCU host to CC3100 device
HOST_INTR	Interrupt from CC3100 device to MCU host
HOST_SPI_MISO	Data from CC3100 device to MCU host
nHIB	Active-low signal that commands the CC3100 device to enter hibernate mode (lowest power state)

8.13 Host UART

The SimpleLink device requires the UART configuration described in Table 8-4.

Table 8-4. SimpleLink™ UART Configuration

PROPERTY	SUPPORTED CC3100 CONFIGURATION
Baud rate	115200 bps, no auto-baud rate detection, can be changed by the host up to 3 Mbps using a special command
Data bits	8 bits
Flow control	CTS/RTS
Parity	None
Stop bits	1
Bit order	Least significant bit (LSB) first
Host interrupt polarity	Active high
Host interrupt mode	Rising edge or level 1
Endianness	Little-endian only(1)

(1) The SimpleLink device does not support automatic detection of the host length while using the UART interface.

8.13.1 5-Wire UART Topology

Figure 8-10 shows the typical 5-wire UART topology comprised of four standard UART lines plus one IRQ line from the device to the host controller to allow efficient low power mode.

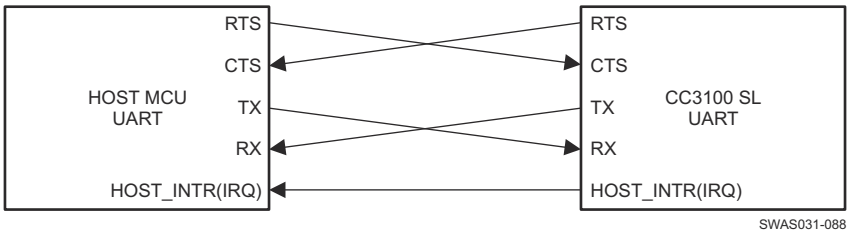

Figure 8-10. Typical 5-Wire UART Topology

Figure 8-10 shows the typical and recommended UART topology because it offers the maximum communication reliability and flexibility between the host and the SimpleLink device.

8.13.2 4-Wire UART Topology

The 4-wire UART topology eliminates the host IRQ line (see Figure 8-11). Using this topology requires one of the following conditions to be met:

- Host is always awake or active.
- Host goes to sleep, but the UART module has receiver start-edge detection for automatic wake up and does not lose data.

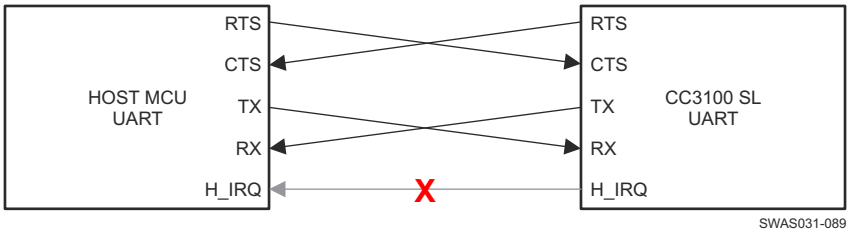

Figure 8-11. 4-Wire UART Configuration

8.13.3 3-Wire UART Topology

The 3-wire UART topology requires only the following lines (see Figure 8-12).

- RX
- TX
- nCTS

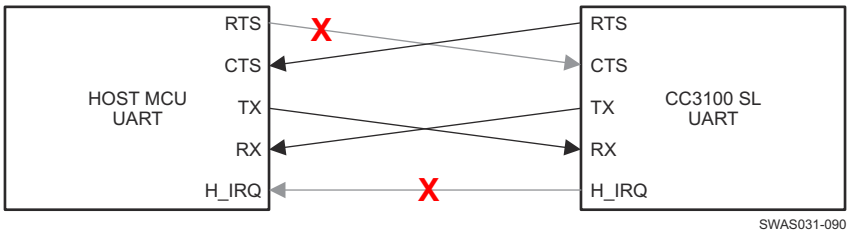

Figure 8-12. 3-Wire UART Topology

Using 3-wire topology requires one of the following conditions to be met:

- Host always stays awake or active.
- Host goes to sleep, but the UART module has receiver start-edge detection for auto wake up and does not lose data.
- Host can always receive any amount of data transmitted by the SimpleLink device because there is no flow control in this direction.

Because there is no full flow control, the host cannot stop the SimpleLink device to send its data; thus, the following parameters must be carefully considered:

- Maximum baud rate
- RX character interrupt latency and low-level driver jitter buffer
- Time consumed by the user's application

Copyright © 2020 Texas Instruments Incorporated

9 Detailed Description

9.1 Overview

The CC3100MOD is a Wi-Fi Module that consists of the CC3100R11MRGC Wi-Fi network processor and power-management subsystems. This fully integrated Module includes all required clocks, SPI flash, and passives.

9.2 Module Features

9.2.1 WLAN

The WLAN features are as follows:

- 802.11 b/g/n integrated radio, modem, and MAC supporting WLAN communication as a BSS station with CCK and OFDM rates in the 2.4-GHz ISM band.
- Autocalibrated radio with a single-ended 50-Ω interface enables easy connection to the antenna without requiring expertise in radio circuit design.
- Advanced connection manager with multiple user-configurable profiles stored in an NVMEM allows automatic, fast connection to an access point without user or host intervention.
- Supports all common Wi-Fi security modes for personal and enterprise networks, with on-chip security accelerators.
- SmartConfig technology: A 1-step, 1-time process to connect a CC3100MOD-enabled device to the home wireless network, removing dependency on the I/O capabilities of the host MCU; thus, it is usable by deeply embedded applications.
- 802.11 transceiver mode transmits and receives proprietary data through a socket without adding MAC or PHY headers, and provides the option to select the working channel, rate, and transmitted power. The receiver mode works together with the filtering options.

9.2.2 Network Stack

The network stack features are as follows:

- Integrated IPv4, IPv6, and TCP/IP stack with BSD socket APIs for simple Internet connectivity with any MCU, microprocessor, or ASIC
- Support of 8 simultaneous TCP, UDP, or RAW sockets
- Built-in network protocols: ARP, ICMP, DHCP client, and DNS client for easy connection to the local network and the Internet
- Service discovery: Multicast DNS service discovery allows a client to advertise its service without a centralized server. After connecting to the access point, the CC3100MOD provides critical information, such as device name, IP, vendor, and port number.

9.2.3 Host Interface and Driver

- Interfaces over a 4-wire SPI with any MCU or a processor at a clock speed of 20 MHz
- Interfaces over UART with any MCU with a baud rate up to 3 Mbps. A low footprint driver is provided for TI MCUs and is easily ported to any processor or ASIC.
- Simple APIs enable easy integration with any single-threaded or multithreaded application.

9.2.4 System

- Works from one preregulated power supply or connects directly to a battery
- Ultra-low leakage when disabled (hibernate mode) with a current of less than 7 µA with the RTC running
- Integrated clock sources

9.3 Functional Block Diagram

Figure 9-1 shows the functional block diagram of the CC3100MOD SimpleLink Wi-Fi solution.

Copyright © 2020 Texas Instruments Incorporated

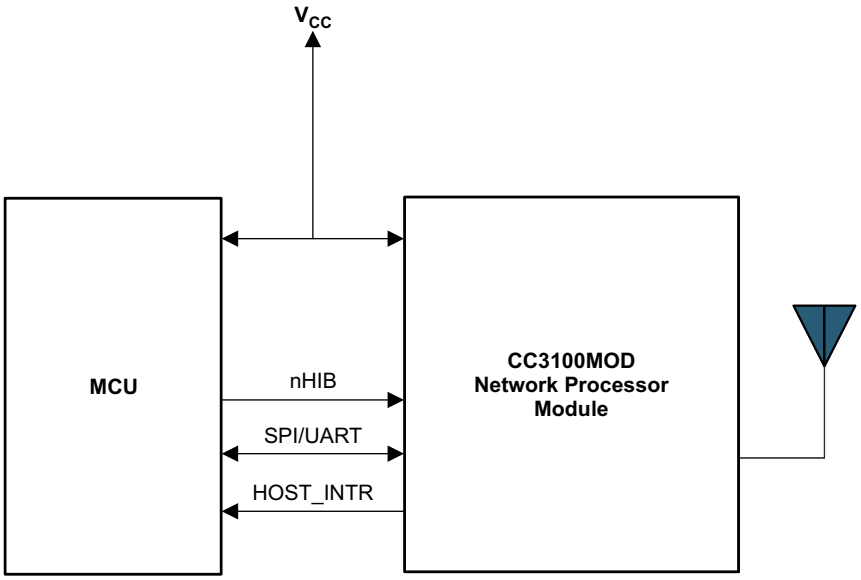

Figure 9-1. Functional Block Diagram

9.4 Wi-Fi Network Processor Subsystem

The Wi-Fi network processor subsystem includes a dedicated ARM MCU to completely offload the host MCU along with an 802.11 b/g/n radio, baseband, and MAC with a powerful crypto engine for a fast, secure WLAN and Internet connections with 256-bit encryption. The CC3100MOD supports station, AP, and Wi-Fi Direct modes. The module also supports WPA2 personal and enterprise security and WPS 2.0. The Wi-Fi network processor includes an embedded IPv4 TCP/IP stack.

Table 9-1 summarizes the NWP features.

Table 9-1. Summary of Features Supported by the NWP Subsystem

ITEM	DOMAIN	CATEGORY	FEATURE	DETAILS
1	TCP/IP	Network Stack	IPv4	Baseline IPv4 stack
2	TCP/IP	Network Stack	TCP/UDP	Base protocols
3	TCP/IP	Protocols	DHCP	Client and server mode
4	TCP/IP	Protocols	ARP	Support ARP protocol
5	TCP/IP	Protocols	DNS/mDNS	DNS Address resolution and local server
6	TCP/IP	Protocols	IGMP	Up to IGMPv3 for multicast management
7	TCP/IP	Applications	mDNS	Support multicast DNS for service publishing over IP
8	TCP/IP	Applications	mDNS-SD	Service discovery protocol over IP in local network
9	TCP/IP	Applications	Web Sever/HTTP Server	URL static and dynamic response with template
10	TCP/IP	Security	TLS/SSL	TLS v1.2 (client/server) / SSL v3.0
11	TCP/IP	Security	TLS/SSL	For the supported Cipher Suite, go to SimpleLink Wi-Fi CC3100 SDK.
12	TCP/IP	Sockets	RAW Sockets	User-defined encapsulation at WLAN MAC/PHY or IP layers
13	WLAN	Connection	Policies	Allows management of connection and reconnection policy
14	WLAN	MAC	Promiscuous mode	Filter-based Promiscuous mode frame receiver
15	WLAN	Performance	Initialization time	From enable to first connection to open AP less than 50 ms
16	WLAN	Performance	Throughput	UDP = 16 Mbps
17	WLAN	Performance	Throughput	TCP = 13 Mbps
18	WLAN	Provisioning	WPS2	Enrollee using push button or PIN method.

Copyright © 2020 Texas Instruments Incorporated

Table 9-1. Summary of Features Supported by the NWP Subsystem (continued)

ITEM	DOMAIN	CATEGORY	FEATURE	DETAILS
19	WLAN	Provisioning	AP Config	AP mode for initial product configuration (with configurable Web page and beacon Info element)
20	WLAN	Provisioning	SmartConfig	Alternate method for initial product configuration
21	WLAN	Role	Station	802.11bgn Station with legacy 802.11 power save
22	WLAN	Role	Soft AP	802.11 bg single station with legacy 802.11 power save
23	WLAN	Role	P2P	P2P operation as GO
24	WLAN	Role	P2P	P2P operation as CLIENT
25	WLAN	Security	STA-Personal	WPA2 personal security
26	WLAN	Security	STA-Enterprise	WPA2 enterprise security
27	WLAN	Security	STA-Enterprise	EAP-TLS
28	WLAN	Security	STA-Enterprise	EAP-PEAPv0/TLS
29	WLAN	Security	STA-Enterprise	EAP-PEAPv1/TLS
30	WLAN	Security	STA-Enterprise	EAP-PEAPv0/MSCHAPv2
31	WLAN	Security	STA-Enterprise	EAP-PEAPv1/MSCHAPv2
32	WLAN	Security	STA-Enterprise	EAP-TTLS/EAP-TLS
33	WLAN	Security	STA-Enterprise	EAP-TTLS/MSCHAPv2
34	WLAN	Security	AP-Personal	WPA2 personal security

9.5 Power-Management Subsystem

The CC3100 power-management subsystem contains DC-DC converters to accommodate the differing voltage or current requirements of the system. The module can operate from an input voltage ranging from 2.3 V to 3.6 V and can be directly connected to 2× AA Alkaline batteries.

The CC3100MOD is a fully integrated module-based WLAN radio solution used on an embedded system with a wide-voltage supply range. The internal power management, including DC-DC converters and LDOs, generates all of the voltages required for the module to operate from a wide variety of input sources. For maximum flexibility, the module can operate in the modes described in the following sections.

9.5.1 V_{BAT} Wide-Voltage Connection

In the wide-voltage battery connection, the module is powered directly by the battery. All other voltages required to operate the device are generated internally by the DC-DC converters. This scheme is the most common mode for the device because it supports wide-voltage operation from 2.3 to 3.6 V.

9.6 Low-Power Operating Modes

This section describes the low-power modes supported by the module to optimize battery life.

9.6.1 Low-Power Deep Sleep

The low-power deep-sleep (LPDS) mode is an energy-efficient and transparent sleep mode that is entered automatically during periods of inactivity based on internal power optimization algorithms. The module draws about 7 µA from the supply in this low-power mode. The module can wake up in less than 3 ms from the internal timer or from any incoming host command. Typical battery drain in this mode is 140 µA. During LPDS mode, the module retains the software state and certain configuration information. The operation is transparent to the external host; thus, no additional handshake is required to enter or exit this sleep mode.

9.6.2 Hibernate

The hibernate mode is the lowest power mode in which all of the digital logic is power-gated. Only a small section of the logic powered directly by the main input supply is retained. The real-time clock (RTC) is kept running and the module wakes up when the n_HIB line is asserted by the host driver. The wake-up time is longer than LPDS mode at about 50 ms.

Copyright © 2020 Texas Instruments Incorporated

Note

Wake-up time can be extended to 75 ms if a patch is loaded from the serial flash.

Copyright © 2020 Texas Instruments Incorporated

10 Applications, Implementation, and Layout

Note

Information in the following applications sections is not part of the TI component specification, and TI does not warrant its accuracy or completeness. TI's customers are responsible for determining suitability of components for their purposes. Customers should validate and test their design implementation to confirm system functionality.

10.1 Reference Schematics

Figure 10-1 shows the reference schematic for the CC3100MOD module. The complete schematic can be downloaded from http://www.ti.com/lit/zip/swrc293.

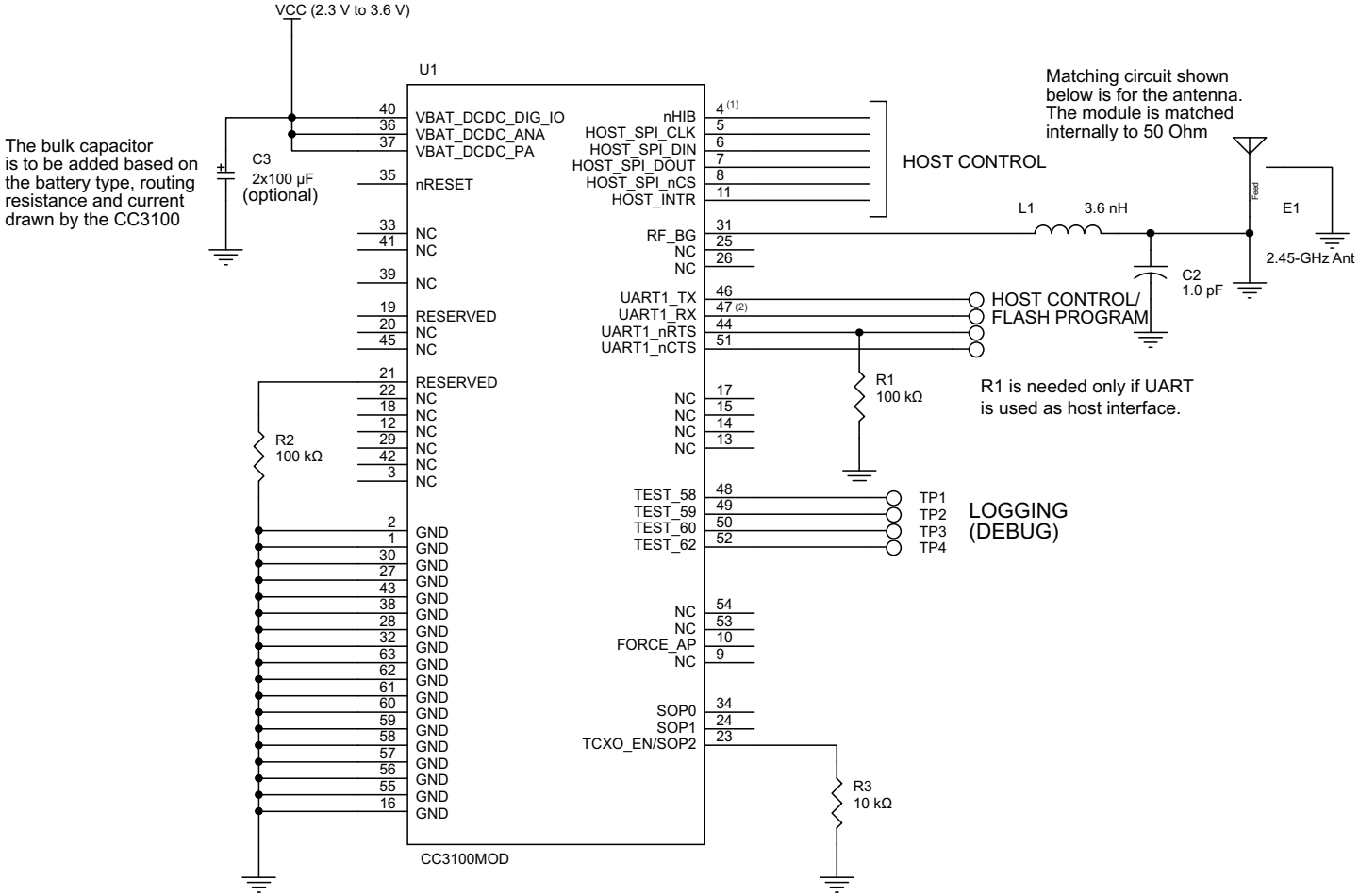

A. If the GPIO from the MCU can float while the MCU enters low power, consider adding a pulldown resistor on the board to avoid floating.
B. TI recommends using a 100-kΩ pullup resistor to save a few tens of µA in hibernate state.
This is the reference schematic and not an actual board design. For the board files, refer to the CC3100MODBOOST in the CC3100MOD Tools Folder .

Figure 10-1. CC3100MOD Module Reference Schematic

Copyright © 2020 Texas Instruments Incorporated

10.2 Design Requirements

Table 10-1 lists the bill of materials for a typical application using the CC3100 device.

Table 10-1. Bill of Materials

QUANTITY	PART REFERENCE	VALUE	MANUFACTURER	PART NUMBER	DESCRIPTION
1	U1	CC3100MOD	Texas Instruments	CC3100MODR11MAMOB	SimpleLink Wi-Fi MCU Module
1	E1	2.45-GHz Ant	Taiyo Yuden	AH316M245001-T	ANT *Bluetooth* WLAN ZigBee® WIMAX
1	C2	1.0 pF	Murata Electronics North America	GJM1555C1H1R0BB01D	CAP CER 1 pF 50 V NP0 0402
1	L1	3.6 nH	Murata Electronics North America	LQP15MN3N6B02D	INDUCTOR 3.6 nH 0.1 NH 0402

Copyright © 2020 Texas Instruments Incorporated

10.3 Layout Recommendations

10.3.1 RF Section (Placement and Routing)

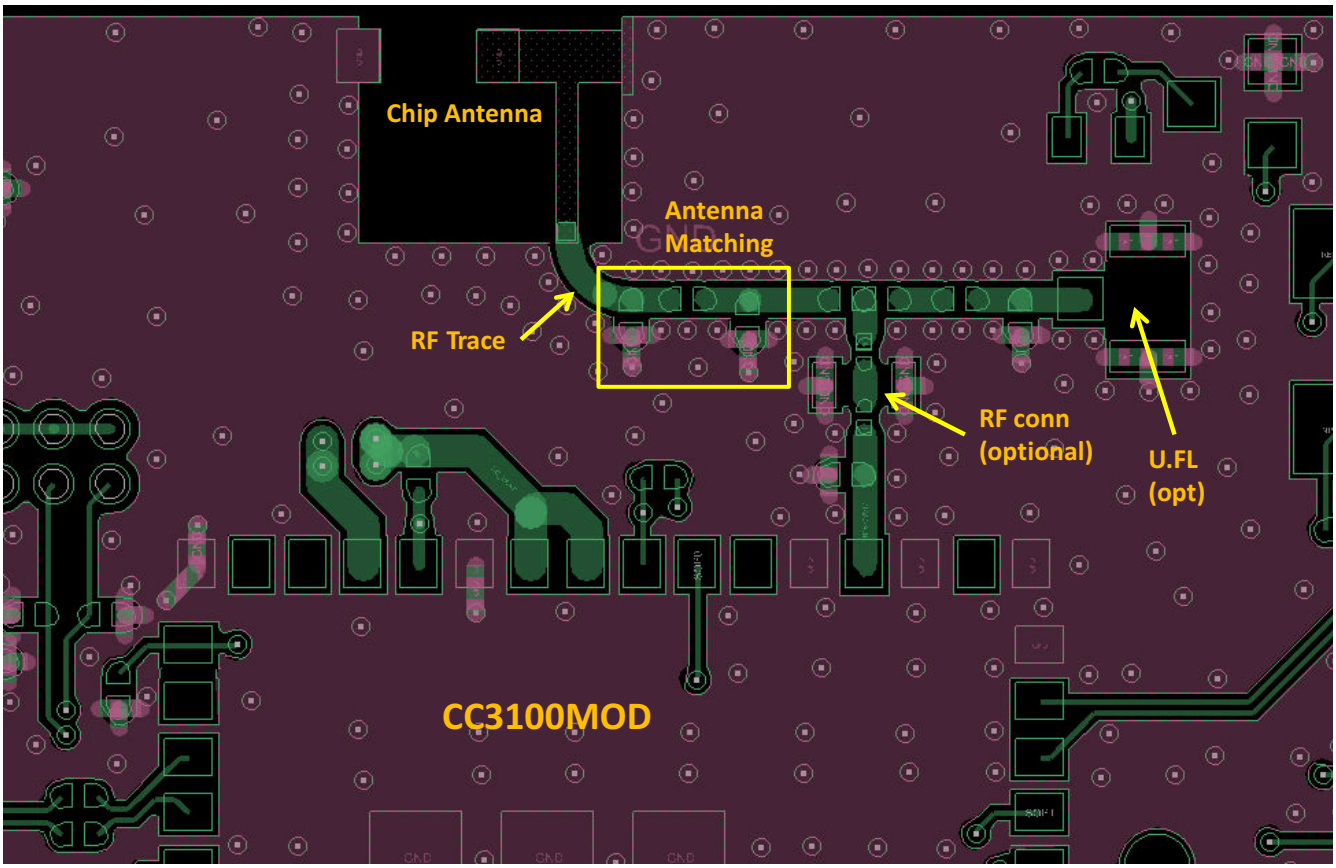

Figure 10-2. RF Section Layout

The RF section of this wireless device gets top priority in terms of layout. It is very important for the RF section to be laid out correctly to ensure optimum performance from the device. A poor layout can cause low-output power, EVM degradation, sensitivity degradation, and mask violations.

10.3.2 Antenna Placement and Routing

The antenna is the element used to convert the guided waves on the PCB traces to the free space electromagnetic radiation. The placement and layout of the antenna are the keys to increased range and data rates. Table 10-2 provides a summary of the recommended antennas to use with the CC3120MOD module.

Table 10-2. Antenna Guidelines

SR NO.	GUIDELINES
1	Place the antenna on an edge or corner of the PCB.
2	Ensure that no signals are routed across the antenna elements on all the layers of the PCB.
3	Most antennas, including the chip antenna used on the booster pack, require ground clearance on all the layers of the PCB. Ensure that the ground is cleared on inner layers as well.
4	Ensure that there is provision to place matching components for the antenna. These must be tuned for best return loss when the complete board is assembled. Any plastics or casing must also be mounted while tuning the antenna because this can impact the impedance.
5	Ensure that the antenna impedance is 50 Ω because the device is rated to work only with a 50-Ω system.

Copyright © 2020 Texas Instruments Incorporated

Table 10-2. Antenna Guidelines (continued)

SR NO.	GUIDELINES
6	In case of printed antenna, ensure that the simulation is performed with the solder mask in consideration.
7	Ensure that the antenna has a near omni-directional pattern.
8	The feed point of the antenna is required to be grounded. This is only for the antenna type used on the CC3200MOD Launchpad. Refer to the specific antenna data sheets for the recommendations.
9	To use the FCC certification of the module, refer to CC31xx and CC32xx Radio Certifications wiki page on CC3200 Radio certification

Table 10-3 lists the recommended antennas to use with the CC3120MOD module.

Table 10-3. Recommended Components

CHOICE	PART NUMBER	MANUFACTURER	NOTES
1	AH316M245001-T	Taiyo Yuden	Can be placed at the edge of the PCB using the least amount of PCB area.

Copyright © 2020 Texas Instruments Incorporated

10.3.3 Transmission Line Considerations

The RF signal from the device is routed to the antenna using a Coplanar Waveguide with ground (CPW-G) structure. CPW-G structure offers the maximum amount of isolation and the best possible shielding to the RF lines. In addition to the ground on the L1 layer, placing GND vias along the line also provides additional shielding. Figure 10-3 shows a cross section of the coplanar waveguide with the critical dimensions.

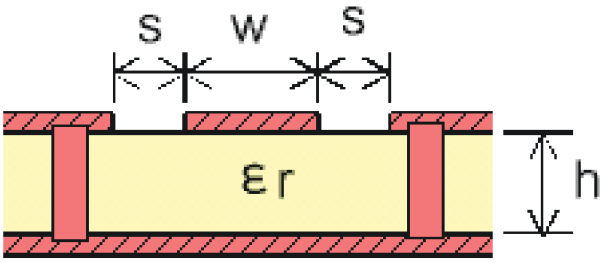

Figure 10-3. Coplanar Waveguide (Cross Section)

Figure 10-4 shows the top view of the coplanar waveguide with GND and via stitching.

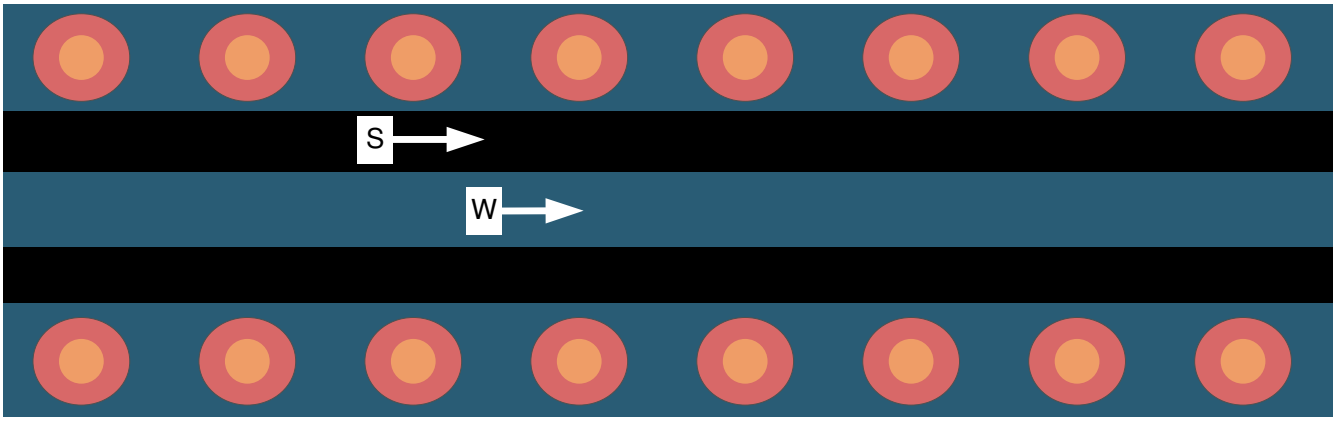

Figure 10-4. CPW With GND and Via Stitching (Top View)

Copyright © 2020 Texas Instruments Incorporated

The recommended values for the PCB are provided for 2-layer boards in Table 10-4 and 4-layer boards in Table 10-5.

Table 10-4. Recommended PCB Values for 2-Layer Board (L1 to L2 = 40 mils)

PARAMETER	VALUE	UNIT
W	35	mils
S	6	mils
H	40	mils
Er (FR-4 substrate)	3.9	

Table 10-5. Recommended PCB Values for 4-Layer Board (L1 to L2 = 10 mils)

PARAMETER	VALUE	UNITS
W	20	mils
S	18	mils
H	10	mils
Er (FR-4 substrate)	4	

Copyright © 2020 Texas Instruments Incorporated

11 Environmental Requirements and Specifications

11.1 Temperature

11.1.1 PCB Bending

The PCB bending specification will maintain planeness at a thickness of less than 0.1 mm.

11.2 Handling Environment

11.2.1 Terminals

The product is mounted with motherboard through land-grid array (LGA). To prevent poor soldering, do not touch the LGA portion by hand.

11.2.2 Falling

The mounted components will be damaged if the product falls or is dropped. Such damage may cause the product to malfunction.

11.3 Storage Condition

11.3.1 Moisture Barrier Bag Before Opened

A moisture barrier bag must be stored in a temperature of less than 30°C with humidity under 85% RH. The calculated shelf life for the dry-packed product will be 12 months from the date the bag is sealed.

11.3.2 Moisture Barrier Bag Open

Humidity indicator cards must be blue, < 30%.

11.4 Baking Conditions

Products require baking before mounting if:

- Humidity indicator cards read > 30%
- Temp < 30°C, humidity < 70% RH, over 96 hours

Baking condition: 90°C, 12–24 hours

Baking times: 1 time

Copyright © 2020 Texas Instruments Incorporated

11.5 Soldering and Reflow Condition

- Heating method: Conventional convection or IR convection
- Temperature measurement: Thermocouple d = 0.1 mm to 0.2 mm CA (K) or CC (T) at soldering portion or equivalent method
- Solder paste composition: Sn/3.0 Ag/0.5 Cu
- Allowable reflow soldering times: 2 times based on the reflow soldering profile (see Figure 11-1)
- Temperature profile: Reflow soldering will be done according to the temperature profile (see Figure 11-1)
- Peak temp: 245°C

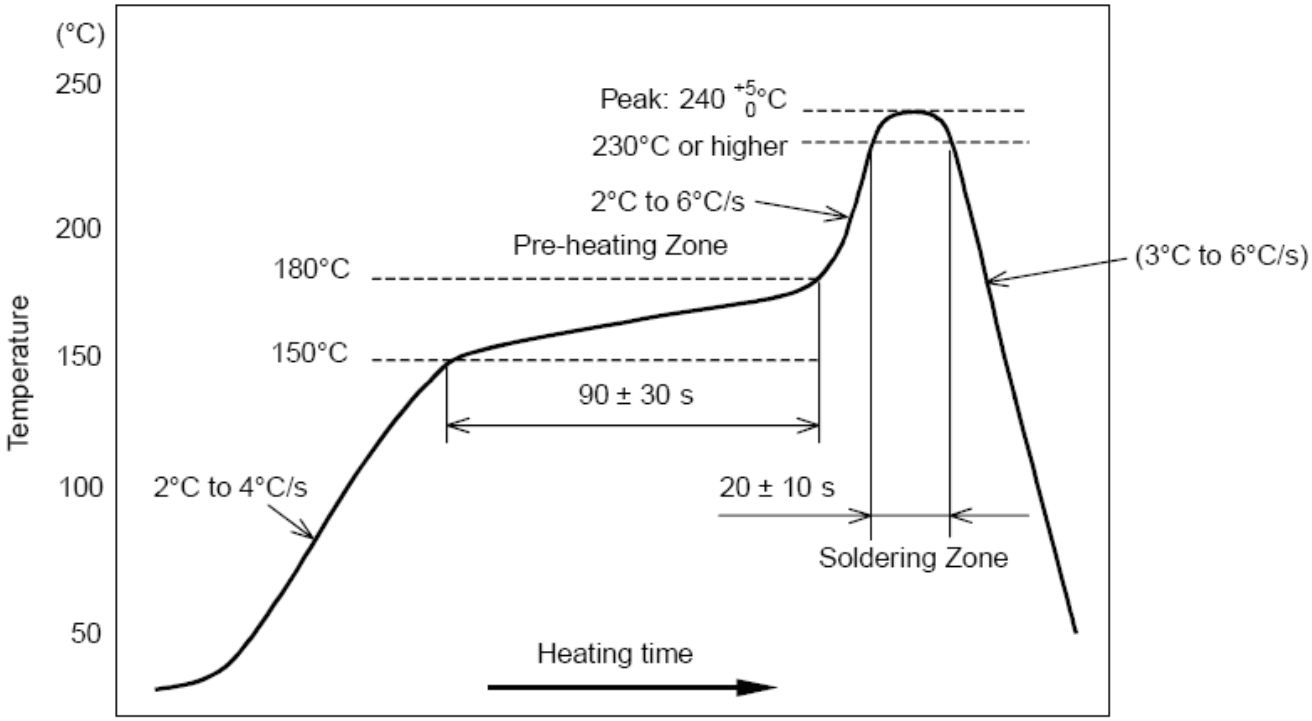

Figure 11-1. Temperature Profile for Evaluation of Solder Heat Resistance of a Component (at Solder Joint)

12 Device and Documentation Support

12.1 Device Support

12.1.1 Development Support

TI offers an extensive line of development tools, including tools to evaluate the performance of the processors, generate code, develop algorithm implementations, and fully integrate and debug software and hardware modules. The tool's support documentation is electronically available within the Code Composer Studio™ Integrated Development Environment (IDE).

The following products support development of the CC3100MOD applications:

Software Development Tools:

Code Composer Studio™ Integrated Development Environment (IDE)	includes Editor C/C++/Assembly Code Generation and Debug plus additional development tools Scalable
Real-Time Foundation Software (DSP/BIOS™)	provides the basic run-time target software needed to support any CC3100MOD application.

Hardware Development Tools:

Extended Development System (XDS™) Emulator

For a complete listing of development-support tools for the CC3100MOD platform, visit the Texas Instruments website at www.ti.com. For information on pricing and availability, contact the nearest TI field sales office or authorized distributor.

12.1.1.1 Firmware Updates

TI updates features in the service pack for this module with no published schedule. Due to the ongoing changes, TI recommends that the user has the latest service pack in his or her module for production.

To stay informed, sign up for the SDK Alert Me button on the tools page or visit www.ti.com/tool/cc3100sdk.

12.1.2 Device Nomenclature

To designate the stages in the product development cycle, TI assigns prefixes to the part numbers of the CC3100MOD and support tools (see Figure 12-1).

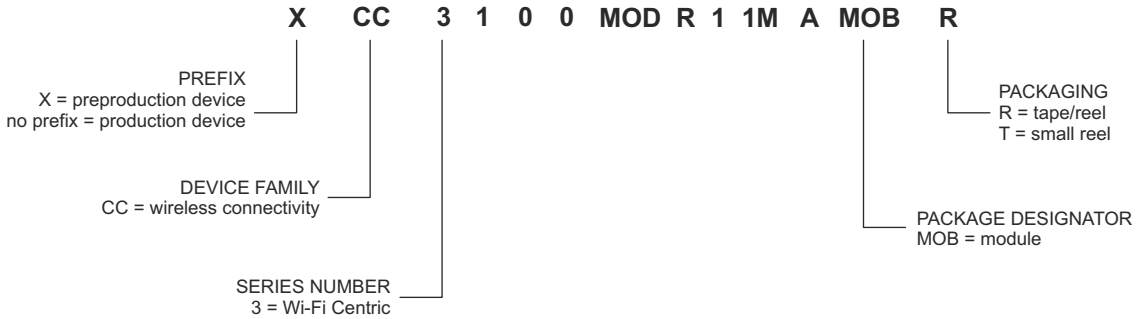

Figure 12-1. CC3100

For orderable part numbers of CC3100MOD modules in the MOB package types, see the Package Option Addendum of this document, the TI website (www.ti.com), or contact your TI sales representative.

12.2 Documentation Support

The following documents describe the CC3100MOD processor/MPU. Copies of these documents are available on the Internet at www.ti.com.

SWRU368 CC3100/CC3200 SimpleLink™ Wi-Fi® Internet-on-a Chip User's Guide

Copyright © 2020 Texas Instruments Incorporated

12.3 Trademarks

Wi-Fi CERTIFIED™ is a trademark of Wi-Fi Alliance.
Internet-on-a chip™, E2E™, XDS™ are trademarks of Texas Instruments.
SimpleLink™ and SmartConfig™ are trademarks of TI.
Code Composer Studio™ is a trademark of Texas Instruments.
Wi-Fi® and Wi-Fi Direct® are registered trademarks of Wi-Fi Alliance.
Arm® are registered trademarks of Arm Limited.
ZigBee® is a registered trademark of ZigBee Alliance.
All other trademarks are the property of their respective owners.

12.4 Electrostatic Discharge Caution

This integrated circuit can be damaged by ESD. Texas Instruments recommends that all integrated circuits be handled with appropriate precautions. Failure to observe proper handling and installation procedures can cause damage.

ESD damage can range from subtle performance degradation to complete device failure. Precision integrated circuits may be more susceptible to damage because very small parametric changes could cause the device not to meet its published specifications.

12.5 Glossary

TI Glossary This glossary lists and explains terms, acronyms, and definitions.

13 Mechanical, Packaging, and Orderable Information

The following pages include mechanical packaging and orderable information. This information is the most current data available for the designated devices. This data is subject to change without notice and revision of this document.

13.1 Mechanical Drawing

Figure 13-1 shows the CC3100MOD module.

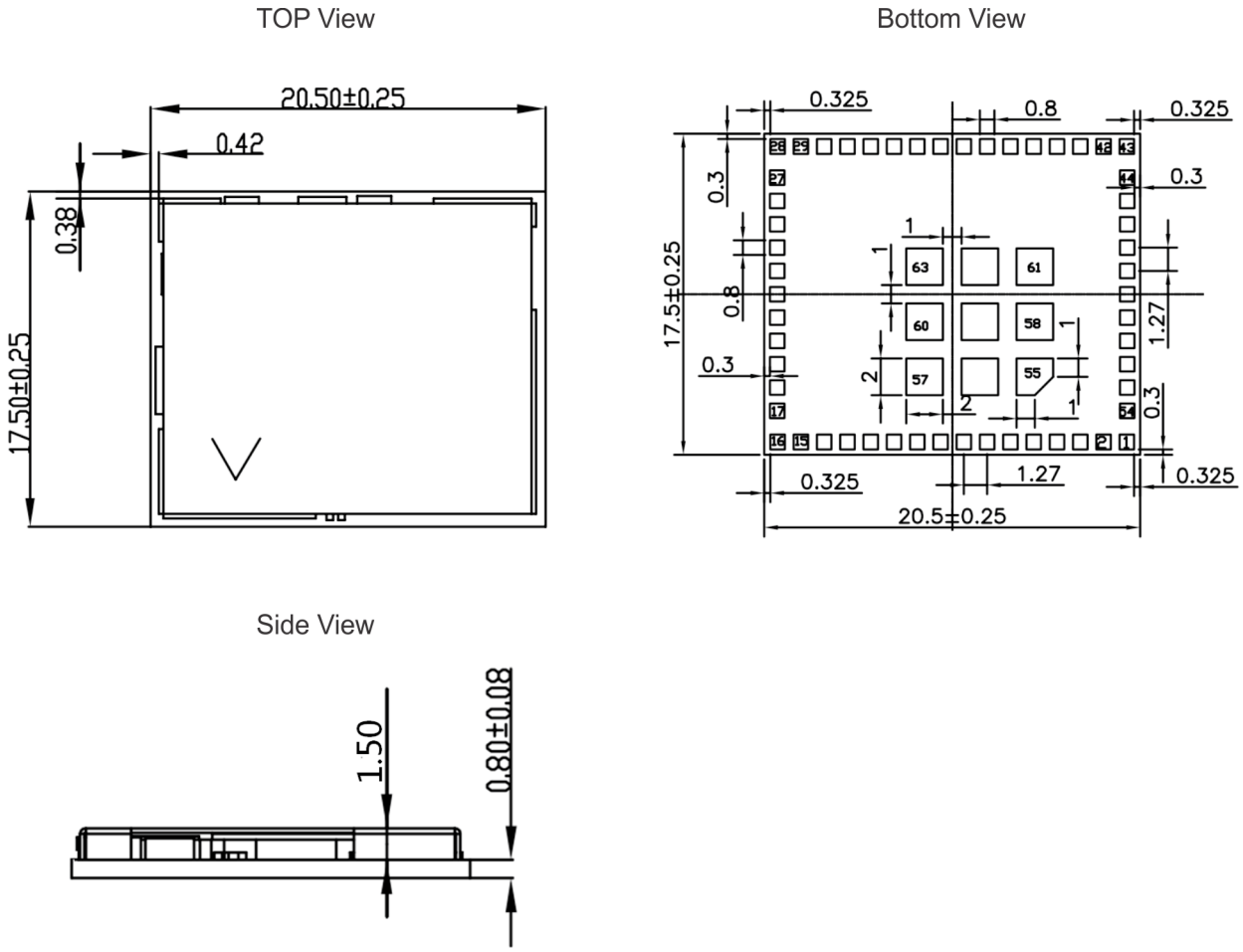

Figure 13-1. Mechanical Drawing

Note

1. The total height of the module is 2.33 mm.
2. The weight of the module is 0.00175 kg ±3%.

Copyright © 2020 Texas Instruments Incorporated

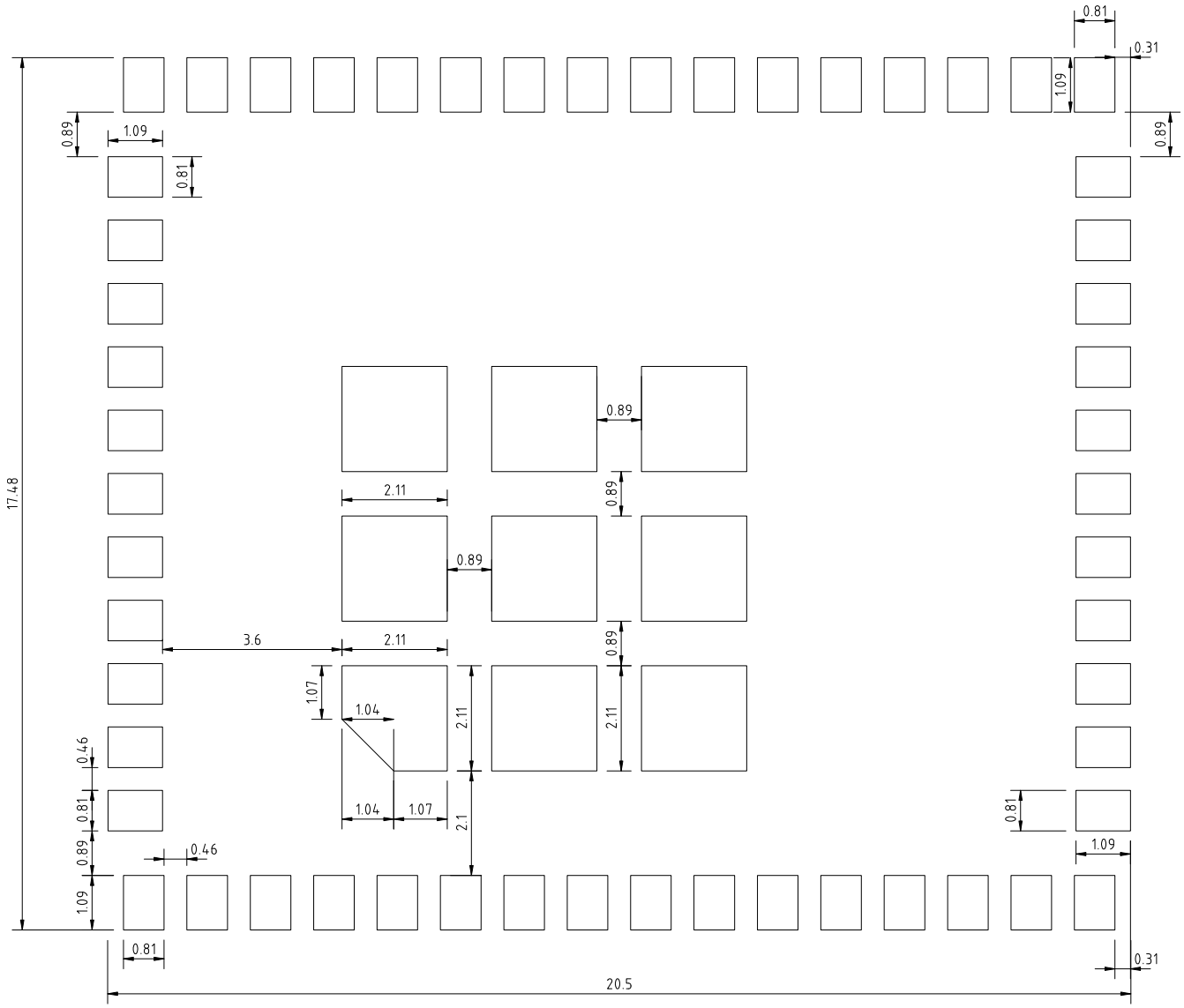

Figure 13-2. Land Pattern Drawing

Note

1. All dimensions are in mm.
2. Solder mask should be the same or 5% larger than the dimension of the pad
3. Solder paste must be the same as the pin for all peripheral pads. For ground pins, make the solder paste 20% smaller than the pad.

13.2 Package Option

We offer two reel size options for flexibility: a 750-unit reel and a 250-unit reel.

Copyright © 2020 Texas Instruments Incorporated

13.2.1 Packaging Information

Orderable Device	Status (1)	Package Drawing	Pins	Package Qty	Eco Plan (2)	Lead/Ball Finish	MSL, Peak Temp (3)	Op Temp (°C)	Device Marking(4) (5)
CC3100MODR11MAMOBR	ACTIVE	MOB	63	750	RoHS Exempt	Ni Au	3, 250°C	–20 to 70	CC3100MODR11MAMOB
CC3100MODR11MAMOBT	ACTIVE	MOB	63	250	RoHS Exempt	Ni Au	3, 250°C	–20 to 70	CC3100MODR11MAMOB

(1) The marketing status values are defined as follows:
ACTIVE: Product device recommended for new designs.
LIFEBUY: TI has announced that the device will be discontinued, and a lifetime-buy period is in effect.
NRND: Not recommended for new designs. Device is in production to support existing customers, but TI does not recommend using this part in a new design.
PRE_PROD Unannounced device, not in production, not available for mass market, nor on the web, samples not available.
PREVIEW: Device has been announced but is not in production. Samples may or may not be available.
OBSOLETE: TI has discontinued the production of the device.

(2) Eco Plan - The planned eco-friendly classification: Pb-Free (RoHS), Pb-Free (RoHS Exempt), or Green (RoHS & no Sb/Br) - please check http://www.ti.com/productcontent for the latest availability information and additional product content details.
Pb-Free (RoHS): TI's terms "Lead-Free" or "Pb-Free" mean semiconductor products that are compatible with the current RoHS requirements for all 6 substances, including the requirement that lead not exceed 0.1% by weight in homogeneous materials. Where designed to be soldered at high temperatures, TI Pb-Free products are suitable for use in specified lead-free processes.
Pb-Free (RoHS Exempt): This component has a RoHS exemption for either 1) lead-based flip-chip solder bumps used between the die and package, or 2) lead-based die adhesive used between the die and leadframe. The component is otherwise considered Pb-Free (RoHS compatible) as defined above.
Green (RoHS & no Sb/Br): TI defines "Green" to mean Pb-Free (RoHS compatible), and free of Bromine (Br) and Antimony (Sb) based flame retardants (Br or Sb do not exceed 0.1% by weight in homogeneous material)

(3) MSL, Peak Temp. -- The Moisture Sensitivity Level rating according to the JEDEC industry standard classifications, and peak solder temperature.

(4) There may be additional marking, which relates to the logo, the lot trace code information, or the environmental category on the device

(5) Multiple Device markings will be inside parentheses. Only on Device Marking contained in parentheses and separated by a "~" will appear on a device. If a line is indented then it is a continuation of the previous line and the two combined represent the entire Device Marking for that device.

Important Information and Disclaimer: The information provided on this page represents TI's knowledge and belief as of the date that it is provided. TI bases its knowledge and belief on information provided by third parties, and makes no representation or warranty as to the accuracy of such information. Efforts are underway to better integrate information from third parties. TI has taken and continues to take reasonable steps to provide representative and accurate information but may not have conducted destructive testing or chemical analysis on incoming materials and chemicals. TI and TI suppliers consider certain information to be proprietary, and thus CAS numbers and other limited information may not be available for release.

In no event shall TI's liability arising out of such information exceed the total purchase price of the TI part(s) at issue in this document sold by TI to Customer on an annual basis.

13.2.2 Tape and Reel Information

REEL DIMENSIONS

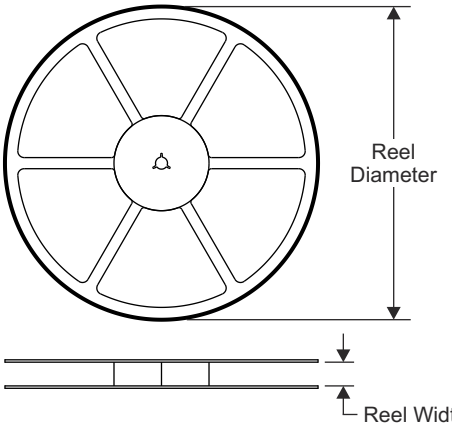

TAPE DIMENSIONS

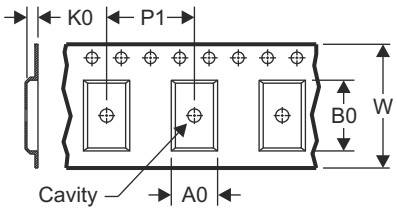

A0	Dimension designed to accommodate the component width
B0	Dimension designed to accommodate the component length
K0	Dimension designed to accommodate the component thickness
W	Overall width of the carrier tape
P1	Pitch between successive cavity centers

QUADRANT ASSIGNMENTS FOR PIN 1 ORIENTATION IN TAPE

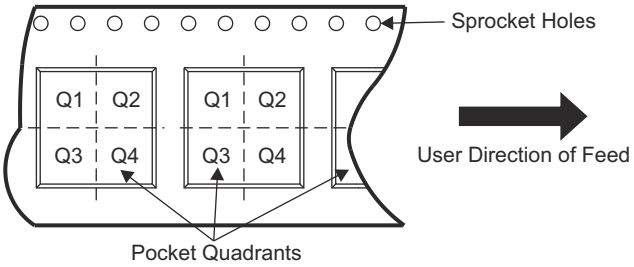

Device	Package Drawing	Pins	SPQ	Reel Diameter (mm)	Reel Width W1 (mm)	A0 (mm)	B0 (mm)	K0 (mm)	P1 (mm)	W (mm)	Pin1 Quadrant
CC3100MODR11MAMOBR	MOB	63	750	330.0±2.0	44.0	17.85±0.10	20.85±0.10	2.50±0.10	24.00±0.10	44.00±0.30	Q1
CC3100MODR11MAMOBT	MOB	63	250	330.0±2.0	44.0	17.85±0.10	20.85±0.10	2.50±0.10	24.00±0.10	44.00±0.30	Q1

Copyright © 2020 Texas Instruments Incorporated

TAPE AND REEL BOX DIMENSIONS

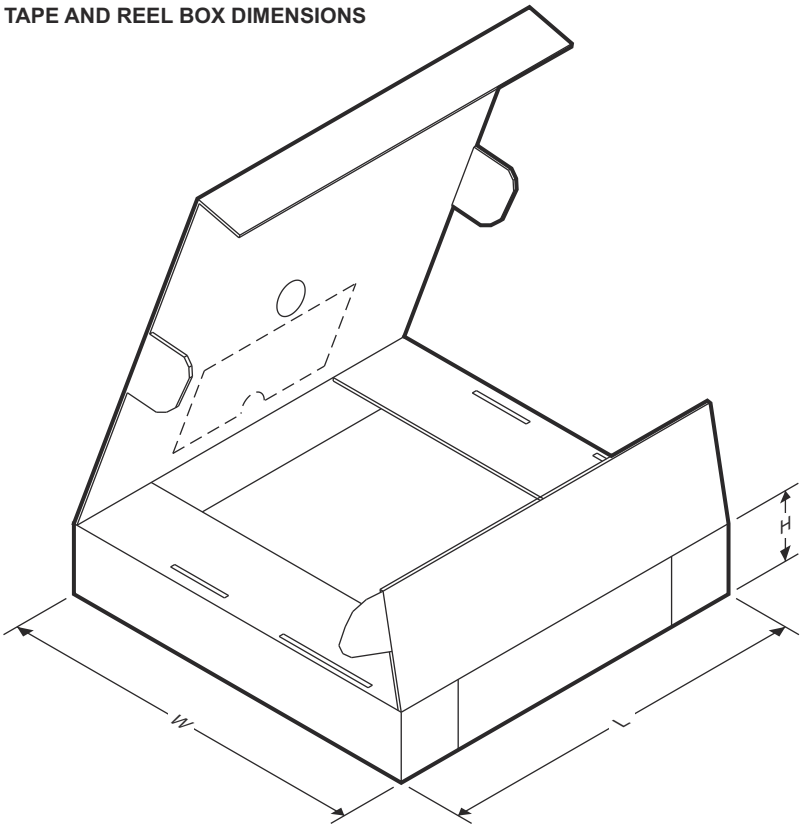

Device	Package Drawing	Pins	SPQ	Length (mm)	Width (mm)	Height (mm)
CC3100MODR11MAMOBR	MOB	63	750	354.0	354.0	55.0
CC3100MODR11MAMOBT	MOB	63	250	354.0	354.0	55.0

PACKAGING INFORMATION

Orderable part number	Status (1)	Material type (2)	Package | Pins	Package qty | Carrier	RoHS (3)	Lead finish/ Ball material (4)	MSL rating/ Peak reflow (5)	Op temp (°C)	Part marking (6)
CC3100MODR11MAMOBR	Active	Production	QFM (MOB) | 63	750 | LARGE T&R	In-Work	NIAU	Level-3-260C-168 HR	-20 to 70	(CC3100MODR11MAMOB, CC3100MODR1M2AMOB) (Z64-CC31000MODR1, Z64-CC3100MODR1) (2015DJ3068(M), 451L-CC3100MODR1) (3.3V, 400MA, 3.3V, 400MA) (001-A08147, 451L-CC3100MODR1) MO-VVSS
CC3100MODR11MAMOBR.B	Active	Production	QFM (MOB) | 63	750 | LARGE T&R	In-Work	NIAU	Level-3-260C-168 HR	-20 to 70	(CC3100MODR11MAMOB, CC3100MODR1M2AMOB) (Z64-CC31000MODR1, Z64-CC3100MODR1) (2015DJ3068(M), 451L-CC3100MODR1) (3.3V, 400MA, 3.3V, 400MA) (001-A08147, 451L-CC3100MODR1) MO-VVSS

Orderable part number	Status (1)	Material type (2)	Package | Pins	Package qty | Carrier	RoHS (3)	Lead finish/ Ball material (4)	MSL rating/ Peak reflow (5)	Op temp (°C)	Part marking (6)
CC3100MODR11MAMOBT	Active	Production	QFM (MOB) | 63	250 | SMALL T&R	Yes	NIAU	Level-3-260C-168 HR	-20 to 70	(CC3100MODR11MAMOB, CC3100MODR1M2AMOB) (Z64-CC31000MODR1, Z64-CC3100MODR1) (2015DJ3068(M), 451L-CC3100MODR1) (3.3V, 400MA, 3.3V, 400MA) (001-A08147, 451L-CC3100MODR1) MO-VVSS
CC3100MODR11MAMOBT.B	Active	Production	QFM (MOB) | 63	250 | SMALL T&R	Yes	NIAU	Level-3-260C-168 HR	-20 to 70	(CC3100MODR11MAMOB, CC3100MODR1M2AMOB) (Z64-CC31000MODR1, Z64-CC3100MODR1) (2015DJ3068(M), 451L-CC3100MODR1) (3.3V, 400MA, 3.3V, 400MA) (001-A08147, 451L-CC3100MODR1) MO-VVSS

(1) **Status:** For more details on status, see our product life cycle.

(2) **Material type:** When designated, preproduction parts are prototypes/experimental devices, and are not yet approved or released for full production. Testing and final process, including without limitation quality assurance, reliability performance testing, and/or process qualification, may not yet be complete, and this item is subject to further changes or possible discontinuation. If available for ordering, purchases will be subject to an additional waiver at checkout, and are intended for early internal evaluation purposes only. These items are sold without warranties of any kind.

(3) **RoHS values:** Yes, No, RoHS Exempt. See the TI RoHS Statement for additional information and value definition.

(4) **Lead finish/Ball material:** Parts may have multiple material finish options. Finish options are separated by a vertical ruled line. Lead finish/Ball material values may wrap to two lines if the finish value exceeds the maximum column width.

(5) **MSL rating/Peak reflow:** The moisture sensitivity level ratings and peak solder (reflow) temperatures. In the event that a part has multiple moisture sensitivity ratings, only the lowest level per JEDEC standards is shown. Refer to the shipping label for the actual reflow temperature that will be used to mount the part to the printed circuit board.

(6) **Part marking:** There may be an additional marking, which relates to the logo, the lot trace code information, or the environmental category of the part.

Multiple part markings will be inside parentheses. Only one part marking contained in parentheses and separated by a "~" will appear on a part. If a line is indented then it is a continuation of the previous line and the two combined represent the entire part marking for that device.

Important Information and Disclaimer: The information provided on this page represents TI's knowledge and belief as of the date that it is provided. TI bases its knowledge and belief on information provided by third parties, and makes no representation or warranty as to the accuracy of such information. Efforts are underway to better integrate information from third parties. TI has taken and continues to take reasonable steps to provide representative and accurate information but may not have conducted destructive testing or chemical analysis on incoming materials and chemicals. TI and TI suppliers consider certain information to be proprietary, and thus CAS numbers and other limited information may not be available for release.

In no event shall TI's liability arising out of such information exceed the total purchase price of the TI part(s) at issue in this document sold by TI to Customer on an annual basis.

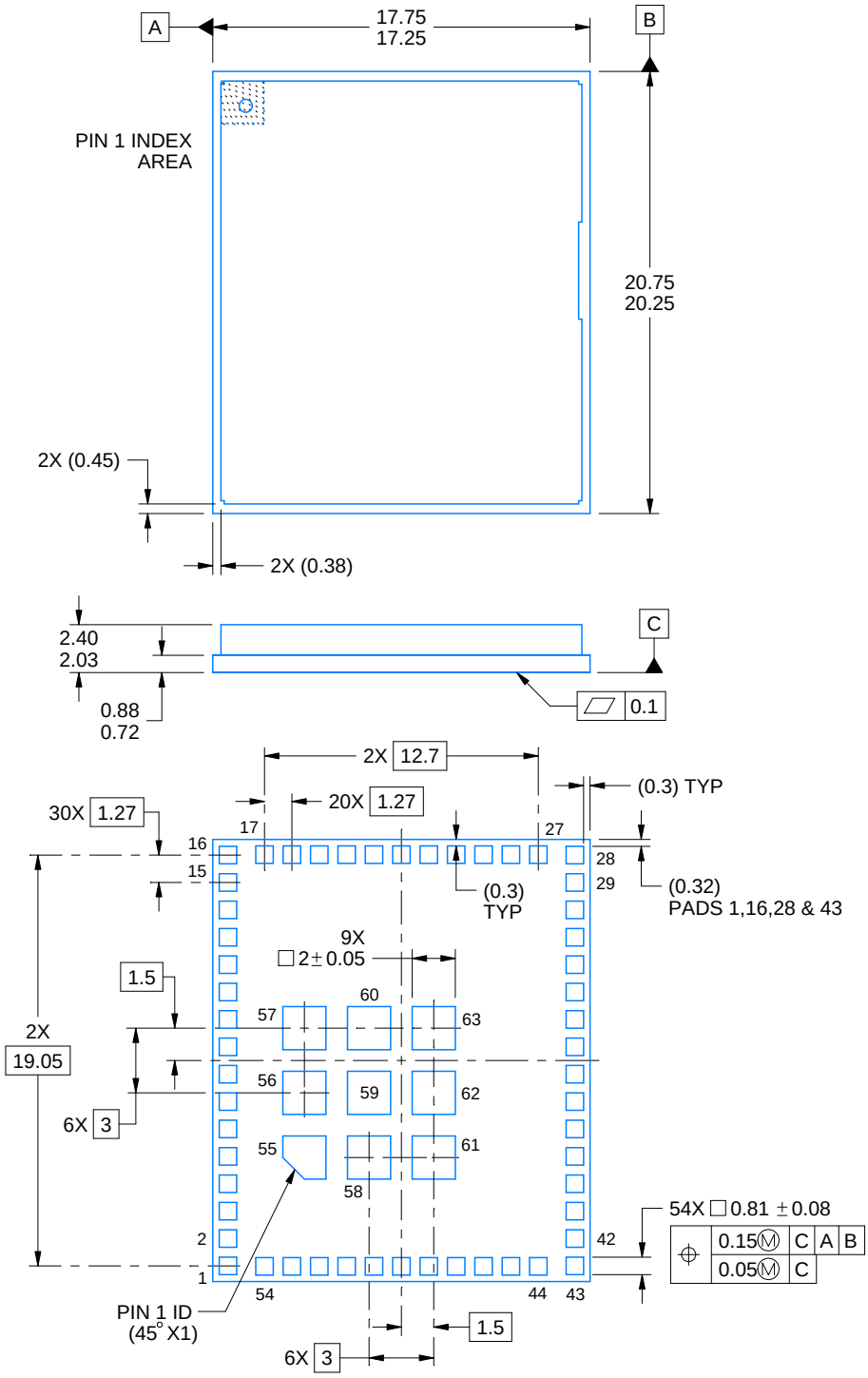

NOTES:

1. All linear dimensions are in millimeters. Any dimensions in parenthesis are for reference only. Dimensioning and tolerancing per ASME Y14.5M.
2. This drawing is subject to change without notice.

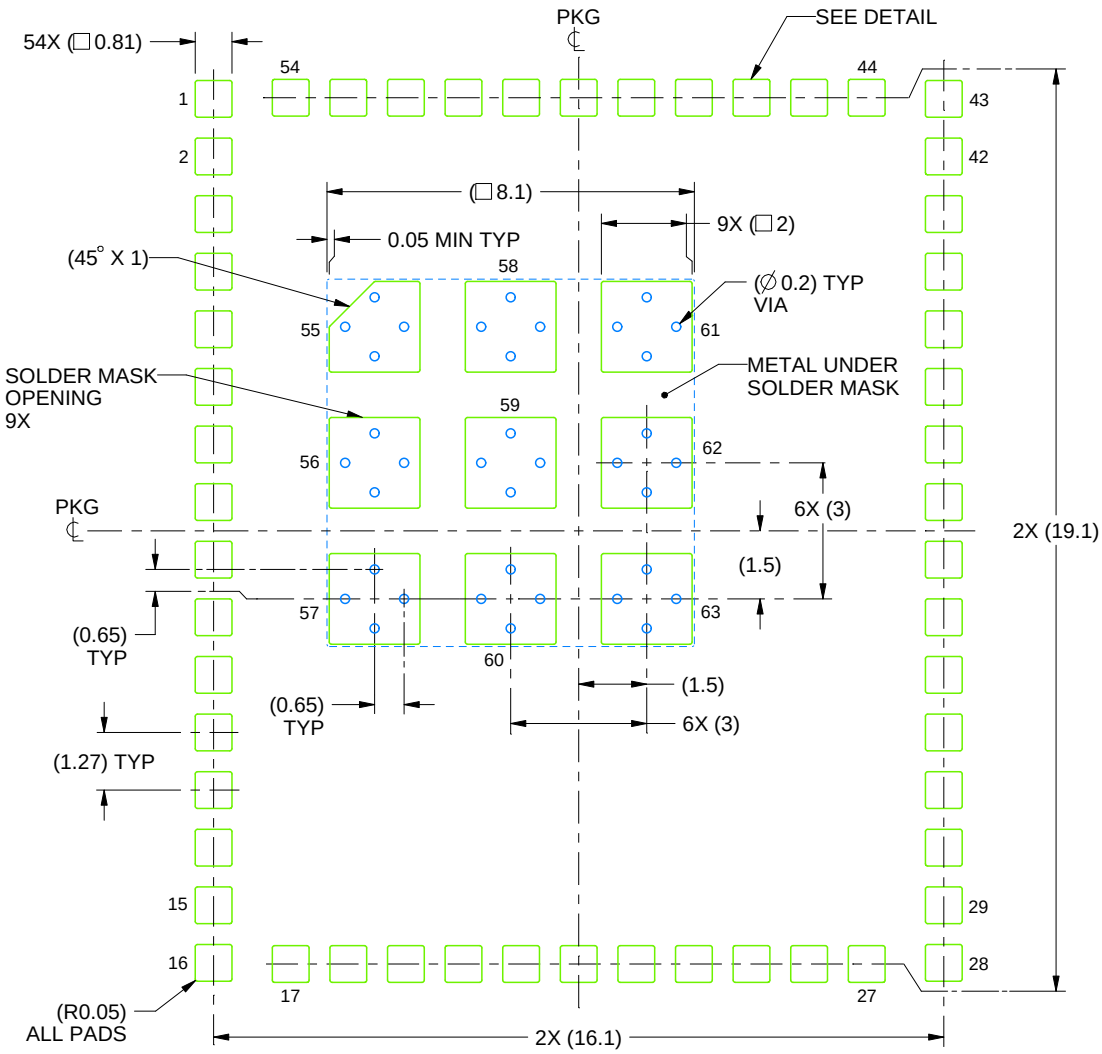

LAND PATTERN EXAMPLE
SOLDER MASK DEFINED
SCALE:6X

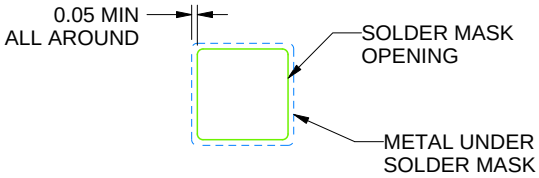

SIGNAL PADS DETAIL

4221462/D 06/2019

NOTES: (continued)

3. This package is designed to be soldered to a thermal pad on the board. For more information, see Texas Instruments literature number SLUA271 (www.ti.com/lit/slua271).

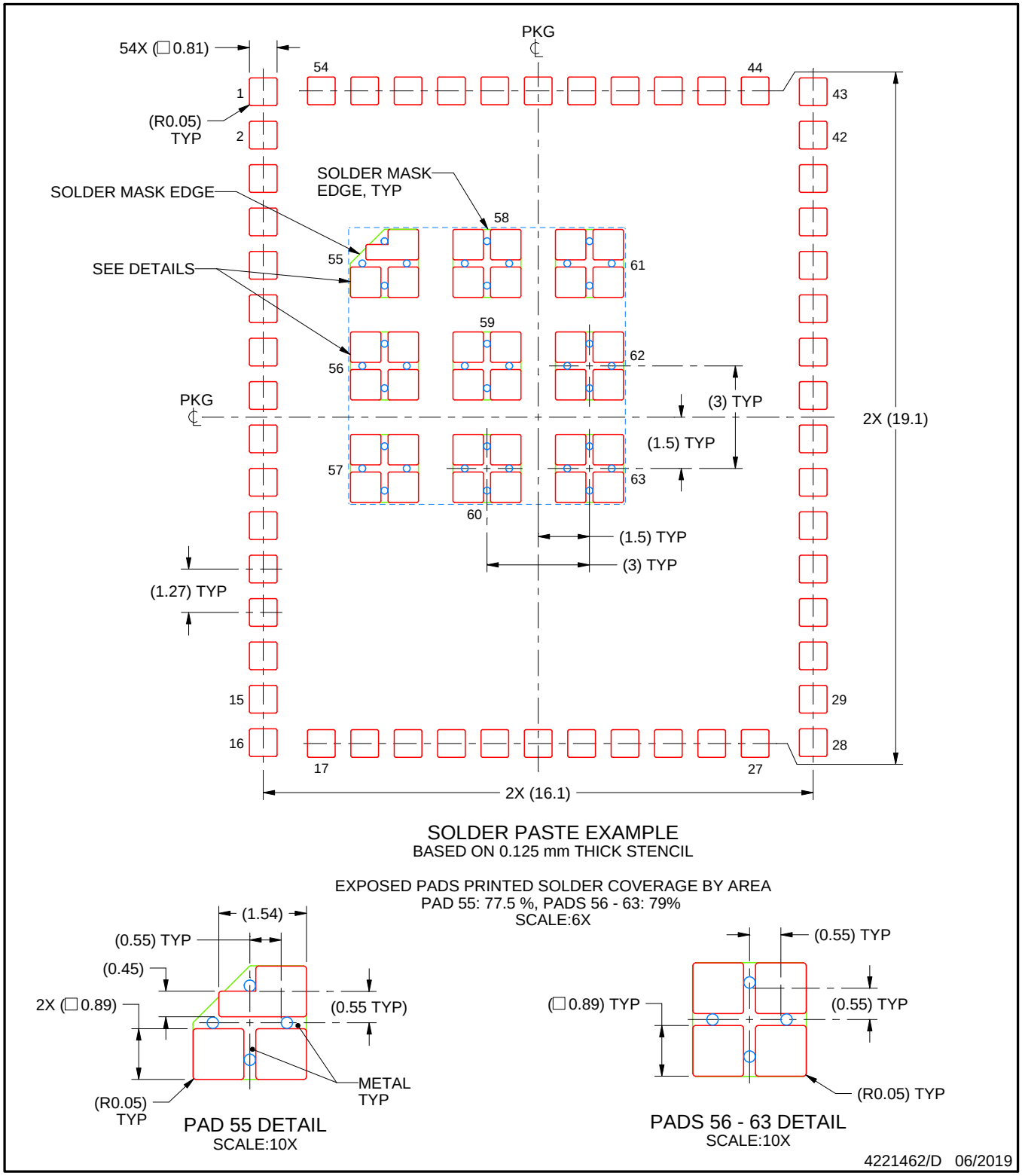

NOTES: (continued)

4. Laser cutting apertures with trapezoidal walls and rounded corners may offer better paste release. IPC-7525 may have alternate design recommendations.

IMPORTANT NOTICE AND DISCLAIMER

TI PROVIDES TECHNICAL AND RELIABILITY DATA (INCLUDING DATA SHEETS), DESIGN RESOURCES (INCLUDING REFERENCE DESIGNS), APPLICATION OR OTHER DESIGN ADVICE, WEB TOOLS, SAFETY INFORMATION, AND OTHER RESOURCES “AS IS” AND WITH ALL FAULTS, AND DISCLAIMS ALL WARRANTIES, EXPRESS AND IMPLIED, INCLUDING WITHOUT LIMITATION ANY IMPLIED WARRANTIES OF MERCHANTABILITY, FITNESS FOR A PARTICULAR PURPOSE OR NON-INFRINGEMENT OF THIRD PARTY INTELLECTUAL PROPERTY RIGHTS.

These resources are intended for skilled developers designing with TI products. You are solely responsible for (1) selecting the appropriate TI products for your application, (2) designing, validating and testing your application, and (3) ensuring your application meets applicable standards, and any other safety, security, regulatory or other requirements.

These resources are subject to change without notice. TI grants you permission to use these resources only for development of an application that uses the TI products described in the resource. Other reproduction and display of these resources is prohibited. No license is granted to any other TI intellectual property right or to any third party intellectual property right. TI disclaims responsibility for, and you will fully indemnify TI and its representatives against, any claims, damages, costs, losses, and liabilities arising out of your use of these resources.

TI’s products are provided subject to TI’s Terms of Sale or other applicable terms available either on ti.com or provided in conjunction with such TI products. TI’s provision of these resources does not expand or otherwise alter TI’s applicable warranties or warranty disclaimers for TI products.

TI objects to and rejects any additional or different terms you may have proposed.

Mailing Address: Texas Instruments, Post Office Box 655303, Dallas, Texas 75265
Copyright © 2025, Texas Instruments Incorporated