SN74LV126A Quadruple Bus Buffer Gates With 3-State Outputs

1 Features

- 2V to 5.5V V_{CC} operation
- Maximum t_{pd} of 6.5ns at 5V
- Typical V_{OLP} (output ground bounce) <0.8V at V_{CC} = 3.3V, T_A = 25°C
- Typical V_{OHV} (output V_{OH} undershoot) >2.3V at V_{CC} = 3.3V, T_A = 25°C
- I_{off} supports live insertion, partial power down mode, and back drive protection
- Support mixed-mode voltage operation on all ports
- Latch-up performance exceeds 250mA per JESD 17

2 Applications

- Servers
- Network switch
- Electronic point of sales
- TV
- Set-top-box

3 Description

The SN74LV126A quadruple bus buffer gates are designed for 2V to 5.5V V_{CC} operation.

These quadruple bus buffer gates are designed for 2V to 5.5V V_{CC} operation.

The SN74LV126A devices feature independent line drivers with 3-state outputs. Each output is disabled when the associated output-enable (OE) input is low.

To ensure the high-impedance state during power up or power down, OE should be tied to GND through a pulldown resistor; the minimum value of the resistor is determined by the current-sourcing capability of the driver.

Package Information

PART NUMBER	PACKAGE(1)	PACKAGE SIZE(2)
SN74LV126A	D (SOIC, 14)	8.65mm × 6mm
	NS (SOP, 14)	10.2mm × 7.8mm
	DB (SSOP, 14)	6.2mm × 7.8mm
	PW (TSSOP, 14)	5mm × 6.4mm

(1) For more information, see Section 11.
(2) The package size (length × width) is a nominal value and includes pins, where applicable.

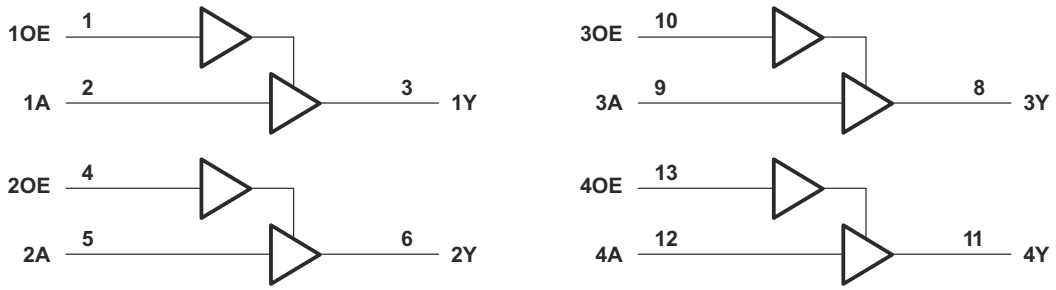

Logic Diagram (Positive Logic)

An IMPORTANT NOTICE at the end of this data sheet addresses availability, warranty, changes, use in safety-critical applications, intellectual property matters and other important disclaimers. PRODUCTION DATA.

Table of Contents

1 Features....1
2 Applications....1
3 Description....1
4 Pin Configuration and Functions....2
5 Specifications....3
5.1 Absolute Maximum Ratings....3
5.2 ESD Ratings....3
5.3 Recommended Operating Conditions....3
5.4 Thermal Information....4
5.5 Electrical Characteristics....4
5.6 Switching Characteristics, V_{CC} = 2.5V ±0.2V....5
5.7 Switching Characteristics, V_{CC} = 3.3V ±0.3V....5
5.8 Switching Characteristics, V_{CC} = 5V ±0.5V....5
5.9 Noise Characteristics....6
5.10 Operating Characteristics....6
5.11 Typical Characteristics....6
6 Parameter Measurement Information....7
7 Detailed Description....8
7.1 Overview....8
7.2 Functional Block Diagram....8
7.3 Feature Description....8
7.4 Device Functional Modes....8
8 Application and Implementation....9
8.1 Application Information....9
8.2 Typical Application....9
8.3 Power Supply Recommendations....10
8.4 Layout....10
9 Device and Documentation Support....11
9.1 Documentation Support....11
9.2 Support Resources....11
9.3 Trademarks....11
9.4 Electrostatic Discharge Caution....11
9.5 Glossary....11
10 Revision History....11
11 Mechanical, Packaging, and Orderable Information....11

4 Pin Configuration and Functions

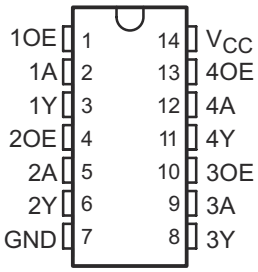

Figure 4-1. SN74LV126A: D, DB, DGV, NS, or PW Package, 14-Pin SOIC, SSOP, TVSOP, SOP, or TSSOP (Top View)

Table 4-1. Pin Functions

PIN		TYPE(1)	DESCRIPTION
NAME	NO.		
1OE	1	I	Channel 1, Output Enable
1A	2	I	Channel 1, Input A
1Y	3	O	Channel 1, Output Y
2OE	4	I	Channel 2, Output Enable
2A	5	I	Channel 2, Input A
2Y	6	O	Channel 2, Output Y
GND	7	—	Ground
3Y	8	O	Channel 3, Output Y
3A	9	I	Channel 3, Input A
3OE	10	I	Channel 3, Output Enable
4Y	11	O	Channel 4, Output Y
4A	12	I	Channel 4, Input A
4OE	13	I	Channel 4, Output Enable
V_{CC}	14	—	Positive Supply

(1) I = input, O = output, P = power, G = ground

Copyright © 2024 Texas Instruments Incorporated

5 Specifications

5.1 Absolute Maximum Ratings

over operating free-air temperature range (unless otherwise noted) [1]

		MIN	MAX	UNIT
V_{CC}	Supply voltage	–0.5	7	V
V_I	Input voltage[2]	–0.5	7	V
V_O	Voltage applied to any output in the high-impedance or power-off state[2]	–0.5	7	V
V_O	Output voltage[2] [3]	–0.5	V_{CC} + 0.5V	V
I_{IK}	Input clamp current, V_I < 0		–20	mA
I_{OK}	Output clamp current, V_O < 0		–50	mA
I_O	Continuous output current, V_O = 0 to V_{CC}		±35	mA
	Continuous current through V_{CC} or GND		±70	mA
T_{stg}	Storage temperature	–65	150	°C

(1) Stresses beyond those listed under *Absolute Maximum Ratings* may cause permanent damage to the device. These are stress ratings only, which do not imply functional operation of the device at these or any other conditions beyond those indicated under *Recommended Operating Conditions*. Exposure to absolute-maximum-rated conditions for extended periods may affect device reliability.
(2) The input and output negative-voltage ratings may be exceeded if the input and output current ratings are observed.
(3) This value is limited to 5.5V maximum.

5.2 ESD Ratings

			VALUE	UNIT
$V_{(ESD)}$	Electrostatic discharge	Human-body model (HBM), per ANSI/ESDA/JEDEC JS-001[1]	±2000	V
		Charged-device model (CDM), per JEDEC specification JESD22-C101[2]	±1000	

(1) JEDEC document JEP155 states that 500-V HBM allows safe manufacturing with a standard ESD control process.
(2) JEDEC document JEP157 states that 250-V CDM allows safe manufacturing with a standard ESD control process.

5.3 Recommended Operating Conditions

see [1]

			MIN	MAX	UNIT
V_{CC}	Supply voltage		2	5.5	V
V_{IH}	High-level input voltage	V_{CC} = 2V	1.5		V
		V_{CC} = 2.3 to 2.7V	V_{CC} × 0.7		
		V_{CC} = 3 to 3.6V	V_{CC} × 0.7		
		V_{CC} = 4.5 to 5.5V	V_{CC} × 0.7		
V_{IL}	Low-level input voltage	V_{CC} = 2V		0.5	V
		V_{CC} = 2.3 to 2.7V		V_{CC} × 0.3	
		V_{CC} = 3 to 3.6V		V_{CC} × 0.3	
		V_{CC} = 4.5 to 5.5V		V_{CC} × 0.3	
V_I	Input voltage		0	5.5	V
V_O	Output voltage	High or low state	0	V_{CC}	V
		3-state	0	5.5	
I_{OH}	High-level output current	V_{CC} = 2V		–50	µA
		V_{CC} = 2.3 to 2.7V		–2	mA
		V_{CC} = 3 to 3.6V		–8	
		V_{CC} = 4.5 to 5.5V		–16	

Copyright © 2024 Texas Instruments Incorporated

5.3 Recommended Operating Conditions (continued)

see [(1)]

			MIN	MAX	UNIT
I_{OL}	Low-level output current	V_{CC} = 2V		50	µA
		V_{CC} = 2.3 to 2.7V		2	mA
		V_{CC} = 3 to 3.6V		8	
		V_{CC} = 4.5 to 5.5V		16	
Δt/Δv	Input transition rise or fall rate	V_{CC} = 2.3 to 2.7V		200	ns/V
		V_{CC} = 3 to 3.6V		100	
		V_{CC} = 4.5 to 5.5V		20	
T_A	Operating free-air temperature		–40	125	°C

(1) All unused inputs of the device must be held at V_{CC} or GND for proper device operation. Refer to the TI application report, *Implications of Slow or Floating CMOS Inputs*, SCBA004.

5.4 Thermal Information

THERMAL METRIC[(1)]		D	DB	DGV	NS	PW	UNIT
		14 PINS					
$R_{\theta JA}$	Junction-to-ambient thermal resistance[(2)]	92.7	105.0	127.6	89.6	119.8	°C/W
$R_{\theta JC(top)}$	Junction-to-case (top) thermal resistance	54.1	57.5	50.7	47.2	48.6	
$R_{\theta JB}$	Junction-to-board thermal resistance	47.0	52.3	60.5	48.4	61.5	
ψ_{JT}	Junction-to-top characterization parameter	18.9	19.1	6.1	14.0	5.7	
ψ_{JB}	Junction-to-board characterization parameter	46.7	51.8	59.8	48.1	61.0	

(1) For more information about traditional and new thermal metrics, see the *IC Package Thermal Metrics* application report, SPRA953.
(2) The package thermal impedance is calculated in accordance with JESD 51-7.

5.5 Electrical Characteristics

over recommended operating free-air temperature range (unless otherwise noted)

PARAMETER	TEST CONDITIONS	V_{CC}	MIN	TYP	MAX	UNIT
V_{OH}	I_{OH} = –50µA	2 to 5.5V	V_{CC} – 0.1			V
	I_{OH} = –2mA	2.3V	2			
	I_{OH} = –8mA	3V	2.48			
	I_{OH} = –16mA	4.5V	3.8			
V_{OL}	I_{OL} = 50µA	2 to 5.5V			0.1	V
	I_{OL} = 2mA	2.3V			0.4	
	I_{OL} = 8mA	3V			0.44	
	I_{OL} = 16mA	4.5V			0.55	
I_I	V_I = 5.5V or GND	0 to 5.5V			±1	µA
I_{OZ}	V_O = V_{CC} or GND	5.5V			±5	µA
I_{CC}	V_I = V_{CC} or GND, I_O = 0	5.5V			20	µA
I_{off}	V_I or V_O = 0 to 5.5V	0V			±5	µA
C_i	V_I = V_{CC} or GND	3.3V		1.6		pF

Copyright © 2024 Texas Instruments Incorporated

5.6 Switching Characteristics, V_{CC} = 2.5V ±0.2V

over recommended operating free-air temperature range (unless otherwise noted) (see Figure 6-1)

PARAMETER	FROM (INPUT)	TO (OUTPUT)	LOAD CAPACITANCE	T_A = 25°C			MIN	MAX	UNIT
				MIN	TYP	MAX			
t_{pd}	A	Y	C_L = 15pF		7.1	13	1	15.5	ns
t_{en}	OE				7.4	13	1	15.5	
t_{dis}	OE				5.7	14.7	1	17	
t_{pd}	A	Y	C_L = 50pF		9.2	16.5	1	18.5	ns
t_{en}	OE				9.5	16.5	1	18.5	
t_{dis}	OE				8.1	18.2	15	20.5	
$t_{sk(o)}$						2		2	

5.7 Switching Characteristics, V_{CC} = 3.3V ±0.3V

over recommended operating free-air temperature range (unless otherwise noted) (see Figure 6-1)

PARAMETER	FROM (INPUT)	TO (OUTPUT)	LOAD CAPACITANCE	T_A = 25°C			MIN	MAX	UNIT
				MIN	TYP	MAX			
t_{pd}	A	Y	C_L = 15pF		5	8	1	9.5	ns
t_{en}	OE				5.1	8	1	9.5	
t_{dis}	OE				4.4	9.7	1	11.5	
t_{pd}	A	Y	C_L = 50pF		6.4	11.5	1	13	ns
t_{en}	OE				6.6	11.5	1	13	
t_{dis}	OE				6.1	13.2	1	15	
$t_{sk(o)}$						1.5		1.5	

5.8 Switching Characteristics, V_{CC} = 5V ±0.5V

over recommended operating free-air temperature range (unless otherwise noted) (see Figure 6-1)

PARAMETER	FROM (INPUT)	TO (OUTPUT)	LOAD CAPACITANCE	T_A = 25°C			MIN	MAX	UNIT
				MIN	TYP	MAX			
t_{pd}	A	Y	C_L = 15pF		3.5	5.5	1	6.5	ns
t_{en}	OE				3.6	5.1	1	6	
t_{dis}	OE				3.3	6.8	1	8	
t_{pd}	A	Y	C_L = 50pF		4.6	7.5	1	8.5	ns
t_{en}	OE				4.6	7.1	1	8	
t_{dis}	OE				4.3	8.8	1	10	
$t_{sk(o)}$						1		1	

Copyright © 2024 Texas Instruments Incorporated

5.9 Noise Characteristics

V_{CC} = 3.3V, C_L = 50pF, T_A = 25°C (see [1])

PARAMETER		MIN	TYP	MAX	UNIT
$V_{OL(P)}$	Quiet output, maximum dynamic V_{OL}		0.3	0.8	V
$V_{OL(V)}$	Quiet output, minimum dynamic V_{OL}		–0.2	–0.8	
$V_{OH(V)}$	Quiet output, minimum dynamic V_{OH}		3.1		
$V_{IH(D)}$	High-level dynamic input voltage	2.31			
$V_{IL(D)}$	Low-level dynamic input voltage			0.97	

(1) Characteristics are for surface-mount packages only.

5.10 Operating Characteristics

T_A = 25°C

PARAMETER		TEST CONDITIONS	V_{CC}	TYP	UNIT
C_{pd}	Power dissipation capacitance	Outputs enable; C_L = 50pF, f = 10MHz	3.3V	14.4	pF
			5V	15.9	

5.11 Typical Characteristics

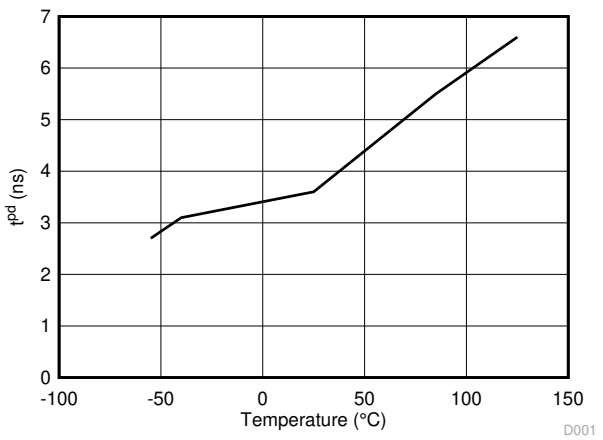

Figure 5-1. SN74LV126A t_{PD} vs Temperature at 5V

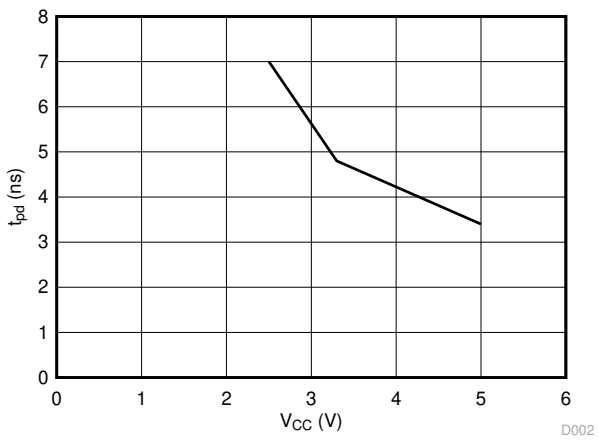

Figure 5-2. SN74LV126A t_{PD} vs V_{CC} at 25°C

Copyright © 2024 Texas Instruments Incorporated

6 Parameter Measurement Information

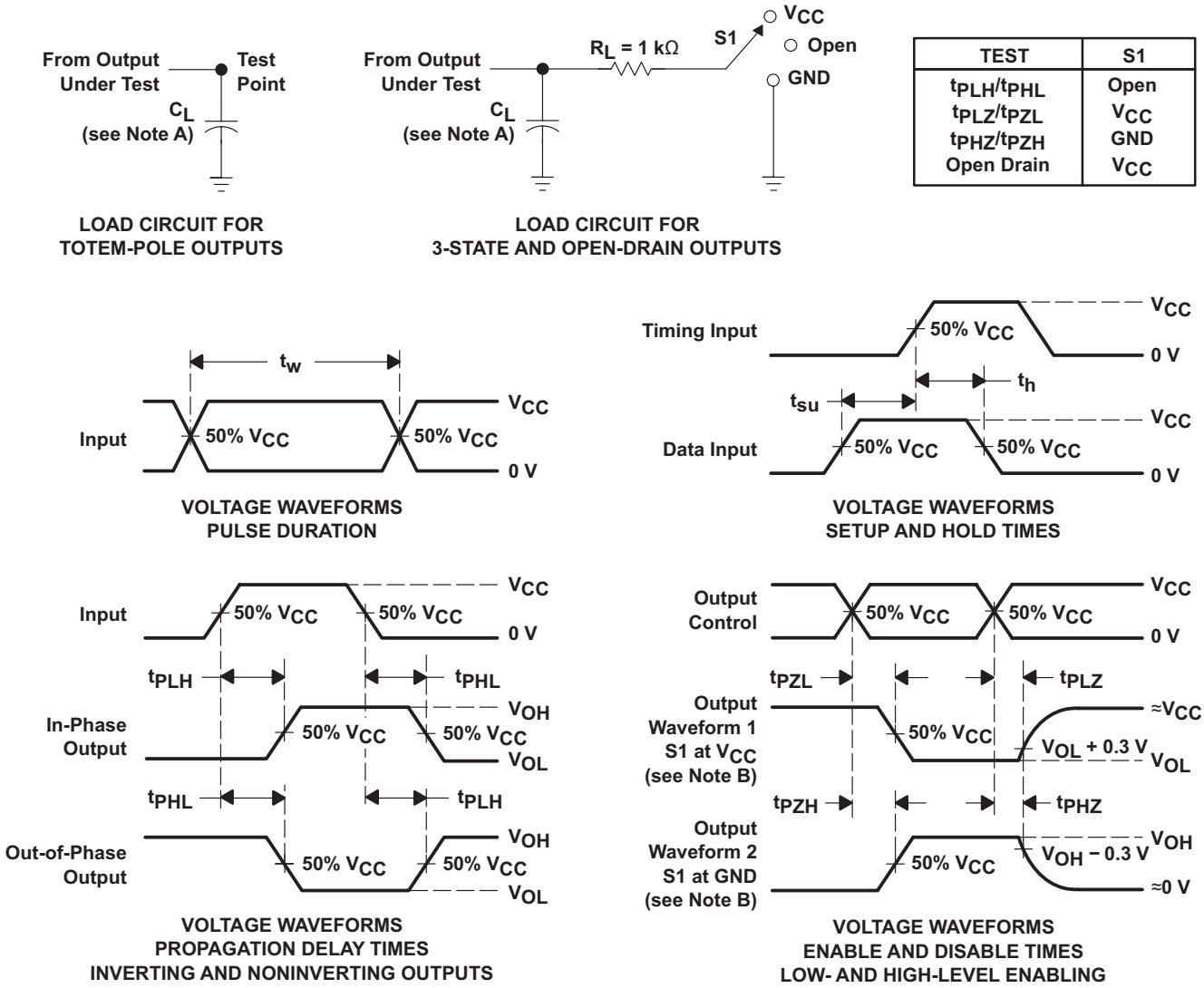

TEST	S1
t_{PLH}/t_{PHL}	Open
t_{PLZ}/t_{PZL}	V_{CC}
t_{PHZ}/t_{PZH}	GND
Open Drain	V_{CC}

A. C_L includes probe and jig capacitance.
B. Waveform 1 is for an output with internal conditions such that the output is low, except when disabled by the output control. Waveform 2 is for an output with internal conditions such that the output is high, except when disabled by the output control.
C. All input pulses are supplied by generators having the following characteristics: PRR ≤ 1MHz, Z_O = 50Ω, t_r ≤ 3ns, t_f ≤ 3ns.
D. The outputs are measured one at a time, with one input transition per measurement.
E. t_{PLZ} and t_{PHZ} are the same as t_{dis}.
F. t_{PZL} and t_{PZH} are the same as t_{en}.
G. t_{PHL} and t_{PLH} are the same as t_{pd}.
H. All parameters and waveforms are not applicable to all devices.

Figure 6-1. Load Circuit and Voltage Waveforms

7 Detailed Description

7.1 Overview

The SN74LV126A devices are quadruple bus buffer gates featuring independent line drivers with 3-state outputs. Each output is disabled when the associated output-enable (OE) input is low. When OE is high, the respective gate passes the data from the A input to its Y output. To put the device in the high-impedance state during power up or power down, tie OE to GND through a pulldown resistor; the current-sourcing capability of the driver determines the minimum value of the resistor.

7.2 Functional Block Diagram

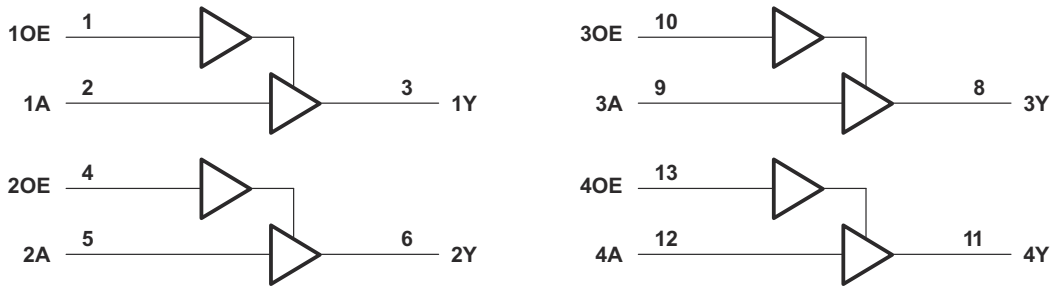

A. Pin numbers shown are for the D, DB, DGV, J, N, NS, PW, and W packages.

Figure 7-1. Logic Diagram (Positive Logic)

7.3 Feature Description

- Wide operating voltage range, operates from 2 to 5.5V
- Allows down voltage translation, inputs accept voltages to 5.5V
- Ioff supports live insertion, partial power down mode, and back drive protection

7.4 Device Functional Modes

Table 7-1. Function Table (Each Buffer)

INPUTS		OUTPUT Y
OE	A	
H	H	H
H	L	L
L	X	Z

Copyright © 2024 Texas Instruments Incorporated

8 Application and Implementation

Note

Information in the following applications sections is not part of the TI component specification, and TI does not warrant its accuracy or completeness. TI's customers are responsible for determining suitability of components for their purposes, as well as validating and testing their design implementation to confirm system functionality.

8.1 Application Information

The SN74LV126A is a low-drive CMOS device that can be used for a multitude of bus interface type applications where output ringing is a concern. The low drive and slow edge rates minimize overshoot and undershoot on the outputs. The inputs are 5.5V tolerant at any valid V_{CC} making this device an excellent choice for translating down to V_{CC}.

8.2 Typical Application

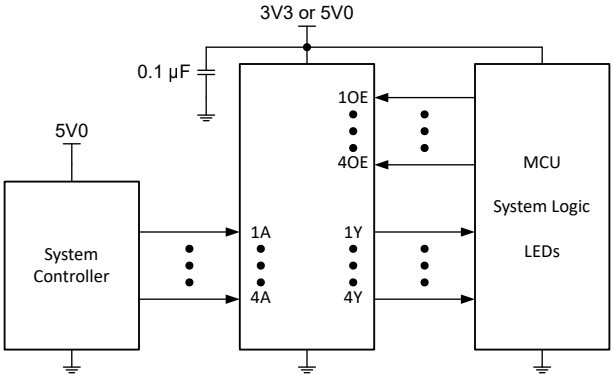

Figure 8-1. Typical Application Schematic

8.2.1 Design Requirements

This device uses CMOS technology and has balanced output drive. Take care to avoid bus contention because it can drive currents that would exceed maximum limits. The high drive will also create fast edges into light loads so routing and load conditions should be considered to prevent ringing.

8.2.2 Detailed Design Procedure

1. Recommended input conditions
   - Rise time and fall time specifications, see (Δt/ΔV) in *Recommended Operating Conditions*.
   - Specified High and low levels. See (V_{IH} and V_{IL}) in *Recommended Operating Conditions*.
2. Recommend output conditions
   - Load currents should not exceed 35mA per output and 70mA total for the part
   - Outputs should not be pulled above V_{CC}

8.2.3 Application Curve

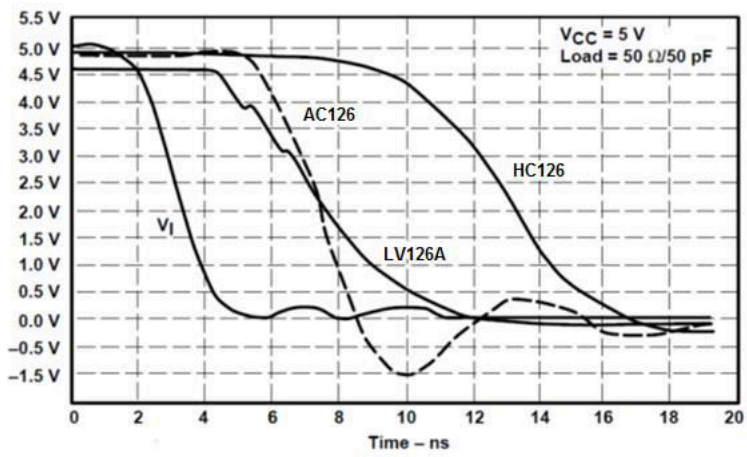

Figure 8-2. Switching Characteristics Comparison

8.3 Power Supply Recommendations

The power supply can be any voltage between the Min and Max supply voltage rating located in *Recommended Operating Conditions*. Each V_{CC} terminal should have a good bypass capacitor to prevent power disturbance. For devices with a single supply, 0.1µF is recommended and if there are multiple V_{CC} terminals then .01 or .022µF is recommended for each power terminal. It is okay to parallel multiple bypass capacitors to reject different frequencies of noise. A 0.1 and 1µF are commonly used in parallel. The bypass capacitor should be installed as close to the power terminal as possible for best results.

8.4 Layout

8.4.1 Layout Guidelines

When using multiple bit logic devices inputs should not ever float. In many cases, functions or parts of functions of digital logic devices are unused, for example, when only two inputs of a triple-input AND gate are used or only 3 of the 4 buffer gates are used. Such input pins should not be left unconnected because the undefined voltages at the outside connections result in undefined operational states. Specified below are the rules that must be observed under all circumstances. All unused inputs of digital logic devices must be connected to a high or low bias to prevent them from floating. The logic level that should be applied to any particular unused input depends on the function of the device. Generally they will be tied to GND or V_{CC} whichever makes more sense or is more convenient. It is generally okay to float outputs unless the part is a transceiver. If the transceiver has an output enable pin, then it will disable the outputs section of the part when asserted. This will not disable the input section of the IOs so they also cannot float when disabled.

8.4.2 Layout Example

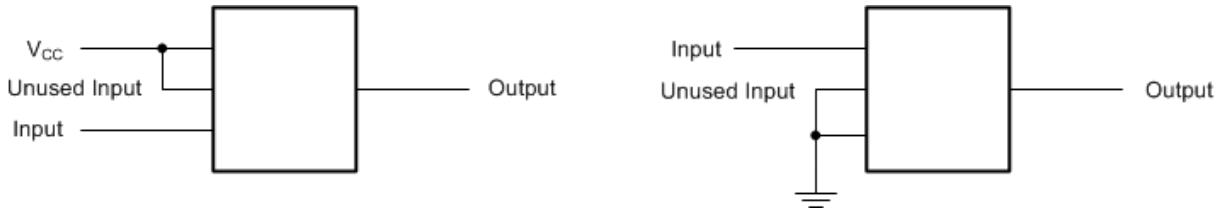

Figure 8-3. Layout Recommendation

Copyright © 2024 Texas Instruments Incorporated

9 Device and Documentation Support

9.1 Documentation Support

9.1.1 Receiving Notification of Documentation Updates

To receive notification of documentation updates, navigate to the device product folder on ti.com. Click on *Notifications* to register and receive a weekly digest of any product information that has changed. For change details, review the revision history included in any revised document.

9.2 Support Resources

TI E2E™ support forums are an engineer's go-to source for fast, verified answers and design help — straight from the experts. Search existing answers or ask your own question to get the quick design help you need.

Linked content is provided "AS IS" by the respective contributors. They do not constitute TI specifications and do not necessarily reflect TI's views; see TI's Terms of Use.

9.3 Trademarks

TI E2E™ is a trademark of Texas Instruments.
All trademarks are the property of their respective owners.

9.4 Electrostatic Discharge Caution

This integrated circuit can be damaged by ESD. Texas Instruments recommends that all integrated circuits be handled with appropriate precautions. Failure to observe proper handling and installation procedures can cause damage.

ESD damage can range from subtle performance degradation to complete device failure. Precision integrated circuits may be more susceptible to damage because very small parametric changes could cause the device not to meet its published specifications.

9.5 Glossary

TI Glossary	This glossary lists and explains terms, acronyms, and definitions.

10 Revision History

NOTE: Page numbers for previous revisions may differ from page numbers in the current version.

Changes from Revision I (February 2015) to Revision J (April 2024)	Page
• Removed the *SN54LV126A* device from the data sheet	1
• Updated the numbering format for tables, figures, and cross-references throughout the document	1
• Changed the 125 function table with the correct 126 function table	8

Changes from Revision H (April 2005) to Revision I (February 2015)	Page
• Added *ESD Ratings* table, *Feature Description* section, *Device Functional Modes*, *Application and Implementation* section, *Power Supply Recommendations* section, *Layout* section, *Device and Documentation Support* section, and *Mechanical, Packaging, and Orderable Information* section	1
• Updated operating free-air temperature maximum from 85°C to 125°C for SN74LV126A	3

11 Mechanical, Packaging, and Orderable Information

The following pages include mechanical, packaging, and orderable information. This information is the most current data available for the designated devices. This data is subject to change without notice and revision of this document. For browser-based versions of this data sheet, refer to the left-hand navigation.

Copyright © 2024 Texas Instruments Incorporated

PACKAGING INFORMATION

Orderable part number	Status (1)	Material type (2)	Package | Pins	Package qty | Carrier	RoHS (3)	Lead finish/ Ball material (4)	MSL rating/ Peak reflow (5)	Op temp (°C)	Part marking (6)
SN74LV126AD	Obsolete	Production	SOIC (D) | 14	-	-	Call TI	Call TI	-40 to 125	LV126A
SN74LV126ADBR	Active	Production	SSOP (DB) | 14	2000 | LARGE T&R	Yes	NIPDAU	Level-1-260C-UNLIM	-40 to 125	LV126A
SN74LV126ADBR.A	Active	Production	SSOP (DB) | 14	2000 | LARGE T&R	Yes	NIPDAU	Level-1-260C-UNLIM	-40 to 125	LV126A
SN74LV126ADGVR	Active	Production	TVSOP (DGV) | 14	2000 | LARGE T&R	Yes	NIPDAU	Level-1-260C-UNLIM	-40 to 125	LV126A
SN74LV126ADGVR.A	Active	Production	TVSOP (DGV) | 14	2000 | LARGE T&R	Yes	NIPDAU	Level-1-260C-UNLIM	-40 to 125	LV126A
SN74LV126ADR	Active	Production	SOIC (D) | 14	2500 | LARGE T&R	Yes	NIPDAU | SN	Level-1-260C-UNLIM	-40 to 125	LV126A
SN74LV126ADR.A	Active	Production	SOIC (D) | 14	2500 | LARGE T&R	Yes	NIPDAU	Level-1-260C-UNLIM	-40 to 125	LV126A
SN74LV126ANSR	Active	Production	SOP (NS) | 14	2000 | LARGE T&R	Yes	NIPDAU	Level-1-260C-UNLIM	-40 to 125	74LV126A
SN74LV126ANSR.A	Active	Production	SOP (NS) | 14	2000 | LARGE T&R	Yes	NIPDAU	Level-1-260C-UNLIM	-40 to 125	74LV126A
SN74LV126APW	Obsolete	Production	TSSOP (PW) | 14	-	-	Call TI	Call TI	-40 to 125	LV126A
SN74LV126APWR	Active	Production	TSSOP (PW) | 14	2000 | LARGE T&R	Yes	NIPDAU | SN	Level-1-260C-UNLIM	-40 to 125	LV126A
SN74LV126APWR.A	Active	Production	TSSOP (PW) | 14	2000 | LARGE T&R	Yes	NIPDAU	Level-1-260C-UNLIM	-40 to 125	LV126A
SN74LV126APWRG4	Active	Production	TSSOP (PW) | 14	2000 | null	Yes	NIPDAU	Level-1-260C-UNLIM	-40 to 125	LV126A
SN74LV126APWRG4	Active	Production	TSSOP (PW) | 14	2000 | null	No	NIPDAU	Level-1-260C-UNLIM	-40 to 125	LV126A
SN74LV126APWRG4.A	Active	Production	TSSOP (PW) | 14	2000 | null	Yes	NIPDAU	Level-1-260C-UNLIM	-40 to 125	LV126A
SN74LV126APWRG4.A	Active	Production	TSSOP (PW) | 14	2000 | null	No	NIPDAU	Level-1-260C-UNLIM	-40 to 125	LV126A
SN74LV126APWT	Obsolete	Production	TSSOP (PW) | 14	-	-	Call TI	Call TI	-40 to 125	LV126A

(1) **Status:** For more details on status, see our product life cycle.

(2) **Material type:** When designated, preproduction parts are prototypes/experimental devices, and are not yet approved or released for full production. Testing and final process, including without limitation quality assurance, reliability performance testing, and/or process qualification, may not yet be complete, and this item is subject to further changes or possible discontinuation. If available for ordering, purchases will be subject to an additional waiver at checkout, and are intended for early internal evaluation purposes only. These items are sold without warranties of any kind.

(3) **RoHS values:** Yes, No, RoHS Exempt. See the TI RoHS Statement for additional information and value definition.

(4) **Lead finish/Ball material:** Parts may have multiple material finish options. Finish options are separated by a vertical ruled line. Lead finish/Ball material values may wrap to two lines if the finish value exceeds the maximum column width.

(5) **MSL rating/Peak reflow:** The moisture sensitivity level ratings and peak solder (reflow) temperatures. In the event that a part has multiple moisture sensitivity ratings, only the lowest level per JEDEC standards is shown. Refer to the shipping label for the actual reflow temperature that will be used to mount the part to the printed circuit board.

(6) **Part marking:** There may be an additional marking, which relates to the logo, the lot trace code information, or the environmental category of the part.

Multiple part markings will be inside parentheses. Only one part marking contained in parentheses and separated by a "~" will appear on a part. If a line is indented then it is a continuation of the previous line and the two combined represent the entire part marking for that device.

Important Information and Disclaimer: The information provided on this page represents TI's knowledge and belief as of the date that it is provided. TI bases its knowledge and belief on information provided by third parties, and makes no representation or warranty as to the accuracy of such information. Efforts are underway to better integrate information from third parties. TI has taken and continues to take reasonable steps to provide representative and accurate information but may not have conducted destructive testing or chemical analysis on incoming materials and chemicals. TI and TI suppliers consider certain information to be proprietary, and thus CAS numbers and other limited information may not be available for release.

In no event shall TI's liability arising out of such information exceed the total purchase price of the TI part(s) at issue in this document sold by TI to Customer on an annual basis.

TAPE AND REEL INFORMATION

REEL DIMENSIONS

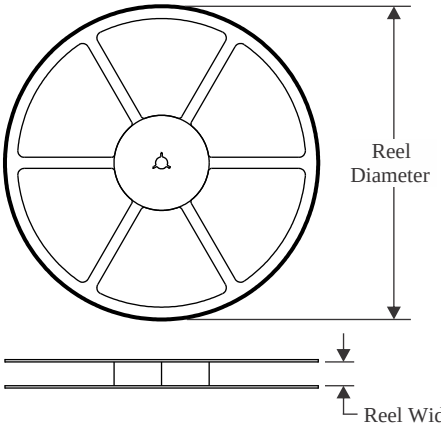

TAPE DIMENSIONS

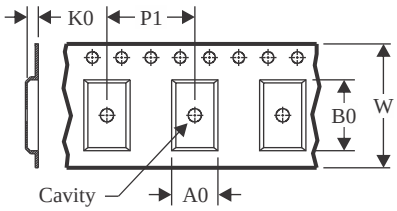

A0	Dimension designed to accommodate the component width
B0	Dimension designed to accommodate the component length
K0	Dimension designed to accommodate the component thickness
W	Overall width of the carrier tape
P1	Pitch between successive cavity centers

QUADRANT ASSIGNMENTS FOR PIN 1 ORIENTATION IN TAPE

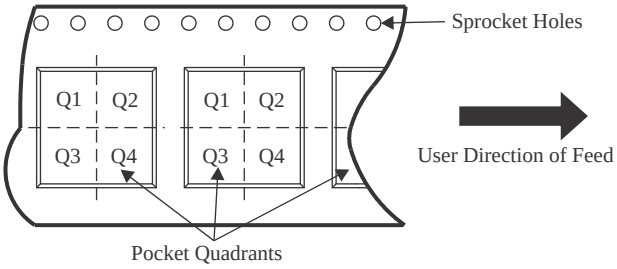

*All dimensions are nominal

Device	Package Type	Package Drawing	Pins	SPQ	Reel Diameter (mm)	Reel Width W1 (mm)	A0 (mm)	B0 (mm)	K0 (mm)	P1 (mm)	W (mm)	Pin1 Quadrant
SN74LV126ADBR	SSOP	DB	14	2000	330.0	16.4	8.35	6.6	2.4	12.0	16.0	Q1
SN74LV126ADGVR	TVSOP	DGV	14	2000	330.0	12.4	6.8	4.0	1.6	8.0	12.0	Q1
SN74LV126ADR	SOIC	D	14	2500	330.0	16.4	6.5	9.0	2.1	8.0	16.0	Q1
SN74LV126ANSR	SOP	NS	14	2000	330.0	16.4	8.2	10.5	2.5	12.0	16.0	Q1
SN74LV126APWR	TSSOP	PW	14	2000	330.0	12.4	6.9	5.6	1.6	8.0	12.0	Q1
SN74LV126APWR	TSSOP	PW	14	2000	330.0	12.4	6.9	5.6	1.6	8.0	12.0	Q1

TAPE AND REEL BOX DIMENSIONS

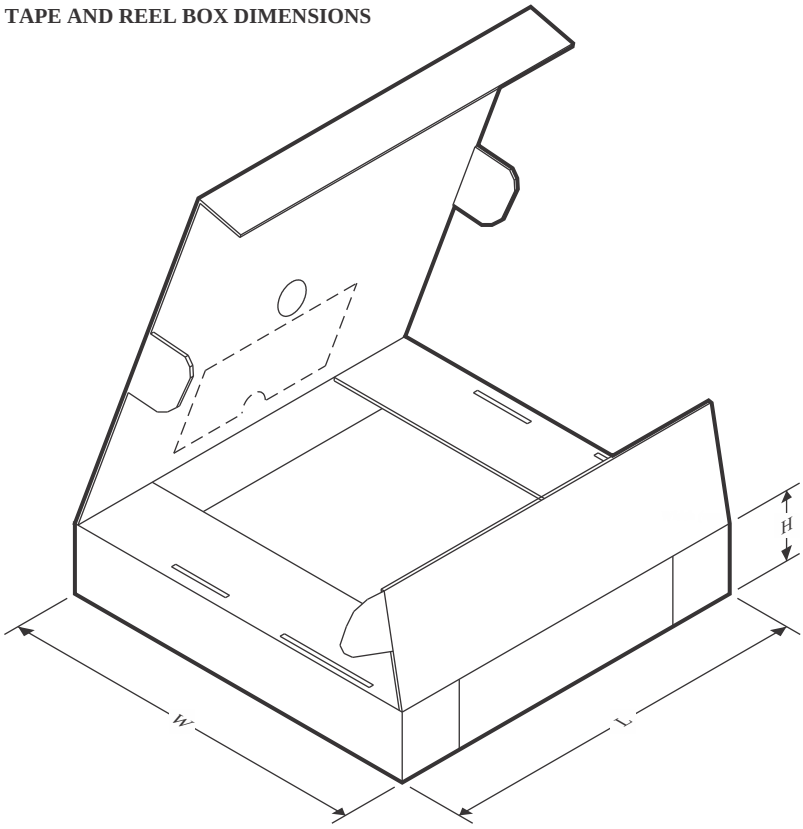

*All dimensions are nominal

Device	Package Type	Package Drawing	Pins	SPQ	Length (mm)	Width (mm)	Height (mm)
SN74LV126ADBR	SSOP	DB	14	2000	356.0	356.0	35.0
SN74LV126ADGVR	TVSOP	DGV	14	2000	356.0	356.0	35.0
SN74LV126ADR	SOIC	D	14	2500	356.0	356.0	35.0
SN74LV126ANSR	SOP	NS	14	2000	356.0	356.0	35.0
SN74LV126APWR	TSSOP	PW	14	2000	356.0	356.0	35.0
SN74LV126APWR	TSSOP	PW	14	2000	353.0	353.0	32.0

DGV (R-PDSO-G)** **PLASTIC SMALL-OUTLINE**

24 PINS SHOWN

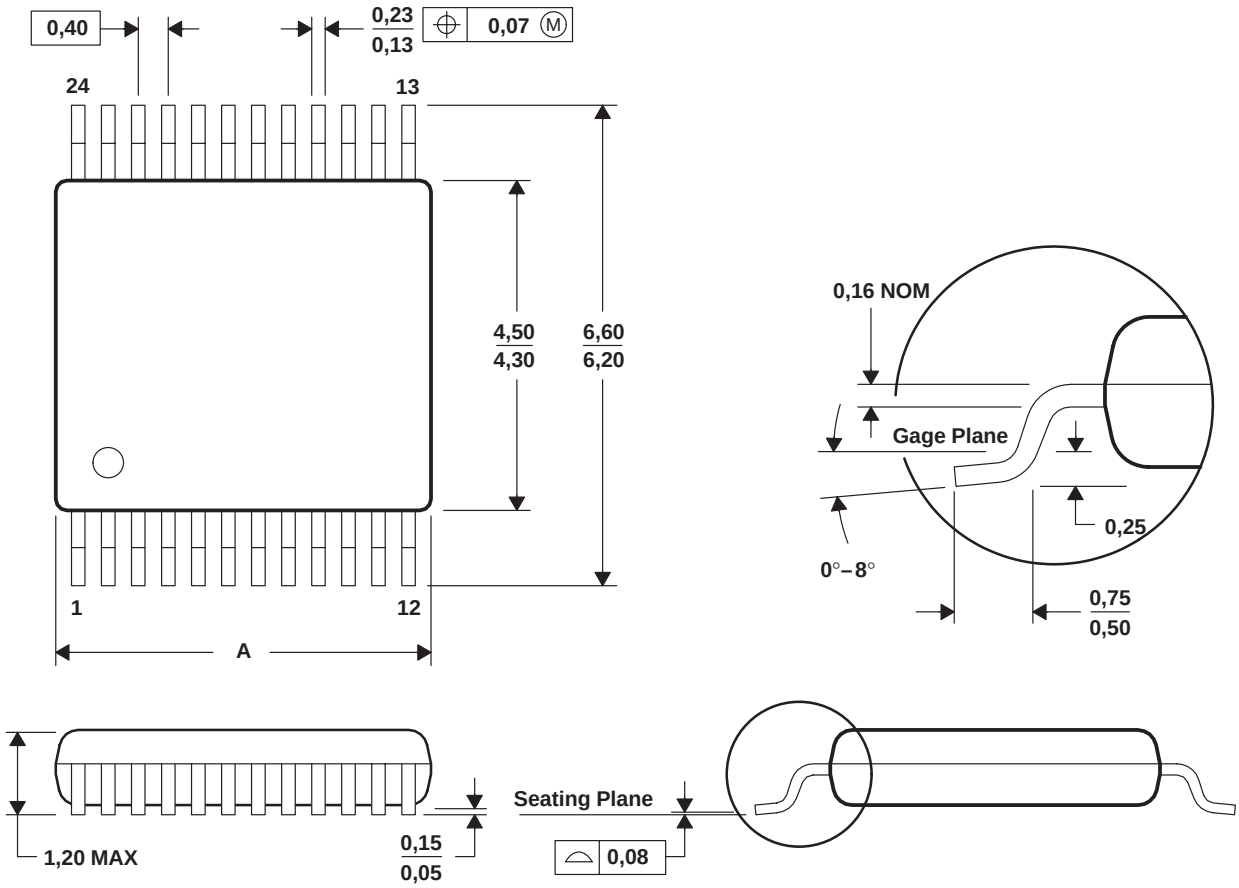

DIM \ PINS **	14	16	20	24	38	48	56
A MAX	3,70	3,70	5,10	5,10	7,90	9,80	11,40
A MIN	3,50	3,50	4,90	4,90	7,70	9,60	11,20

4073251/E 08/00

NOTES: A. All linear dimensions are in millimeters.
B. This drawing is subject to change without notice.
C. Body dimensions do not include mold flash or protrusion, not to exceed 0,15 per side.
D. Falls within JEDEC: 24/48 Pins – MO-153
14/16/20/56 Pins – MO-194

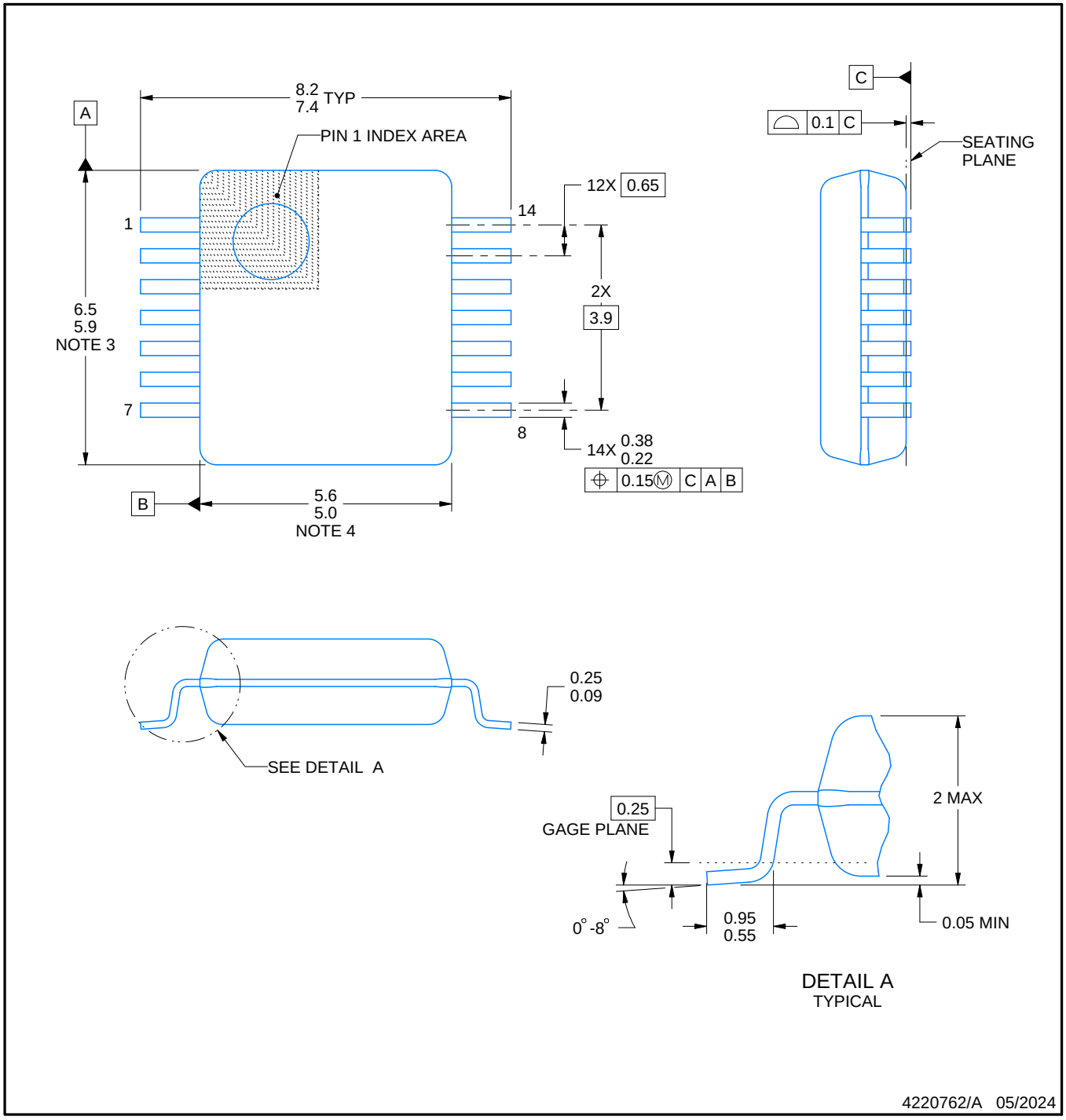

NOTES:

1. All linear dimensions are in millimeters. Any dimensions in parenthesis are for reference only. Dimensioning and tolerancing per ASME Y14.5M.
2. This drawing is subject to change without notice.
3. This dimension does not include mold flash, protrusions, or gate burrs. Mold flash, protrusions, or gate burrs shall not exceed 0.15 mm per side.
4. Reference JEDEC registration MO-150.

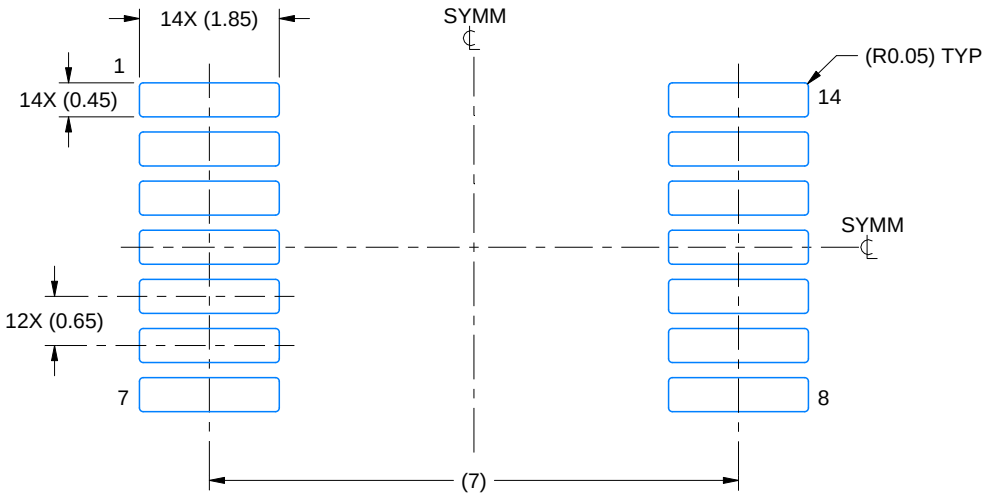

LAND PATTERN EXAMPLE
EXPOSED METAL SHOWN
SCALE: 10X

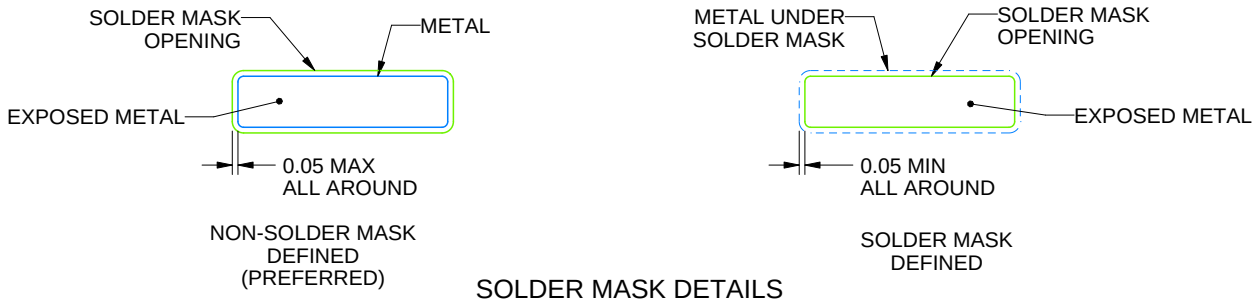

SOLDER MASK DETAILS

4220762/A 05/2024

NOTES: (continued)

5. Publication IPC-7351 may have alternate designs.
6. Solder mask tolerances between and around signal pads can vary based on board fabrication site.

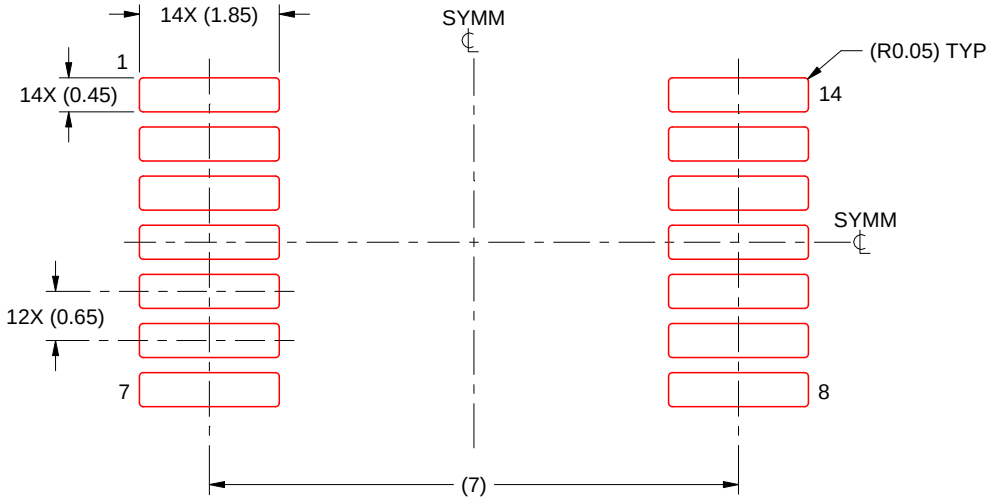

SOLDER PASTE EXAMPLE
BASED ON 0.125 mm THICK STENCIL
SCALE: 10X

4220762/A 05/2024

NOTES: (continued)

7. Laser cutting apertures with trapezoidal walls and rounded corners may offer better paste release. IPC-7525 may have alternate design recommendations.
8. Board assembly site may have different recommendations for stencil design.

PW0014A

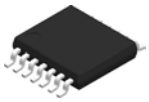

PACKAGE OUTLINE

TSSOP - 1.2 mm max height

SMALL OUTLINE PACKAGE

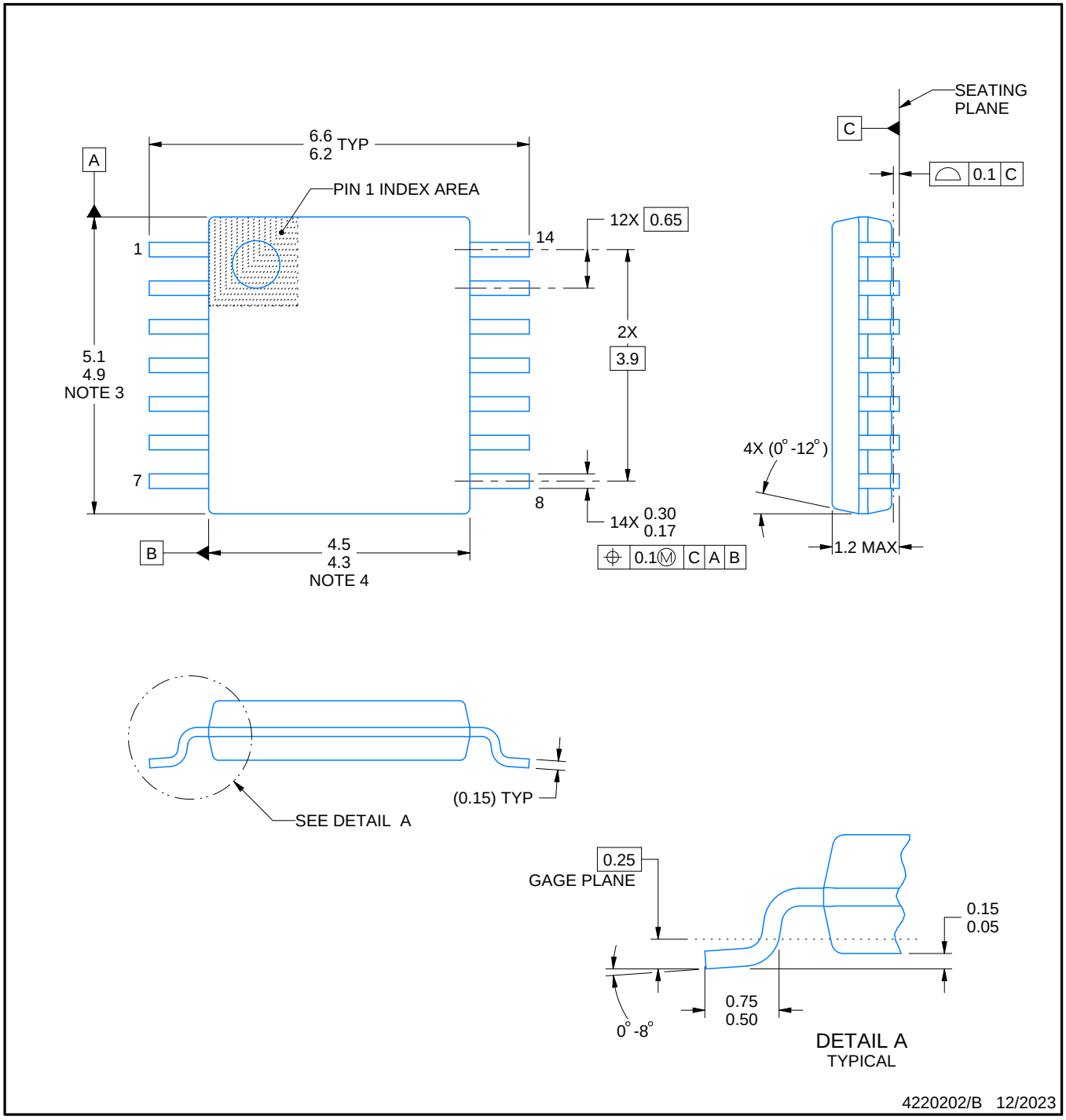

NOTES:

1. All linear dimensions are in millimeters. Any dimensions in parenthesis are for reference only. Dimensioning and tolerancing per ASME Y14.5M.
2. This drawing is subject to change without notice.
3. This dimension does not include mold flash, protrusions, or gate burrs. Mold flash, protrusions, or gate burrs shall not exceed 0.15 mm per side.
4. This dimension does not include interlead flash. Interlead flash shall not exceed 0.25 mm per side.
5. Reference JEDEC registration MO-153.

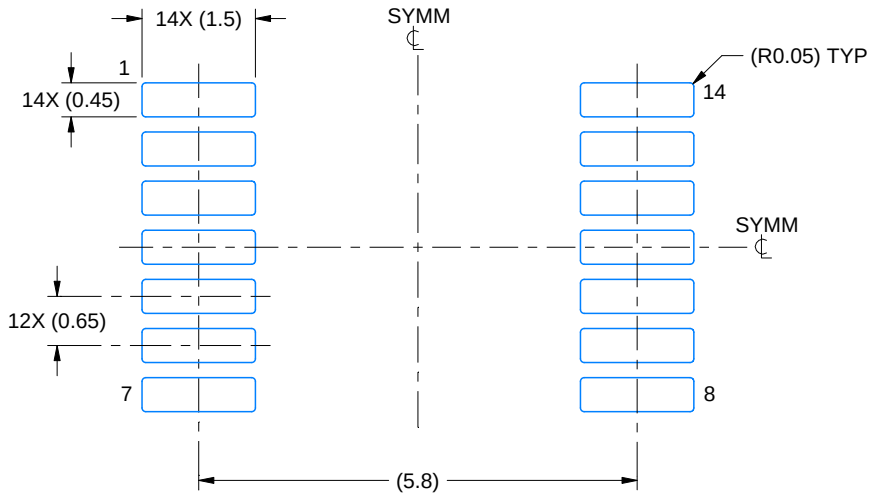

LAND PATTERN EXAMPLE
EXPOSED METAL SHOWN
SCALE: 10X

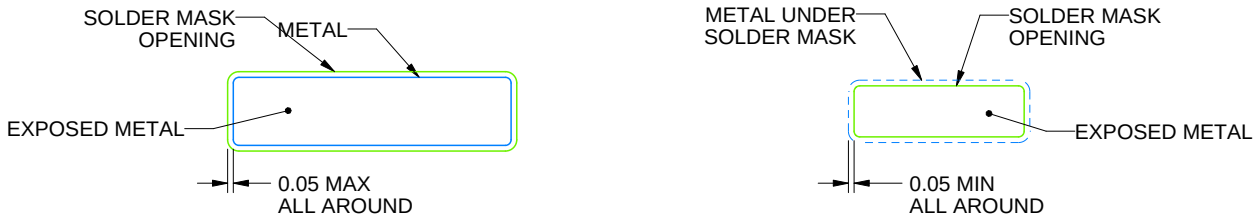

NON-SOLDER MASK DEFINED (PREFERRED)

SOLDER MASK DEFINED

SOLDER MASK DETAILS

4220202/B 12/2023

NOTES: (continued)

6. Publication IPC-7351 may have alternate designs.
7. Solder mask tolerances between and around signal pads can vary based on board fabrication site.

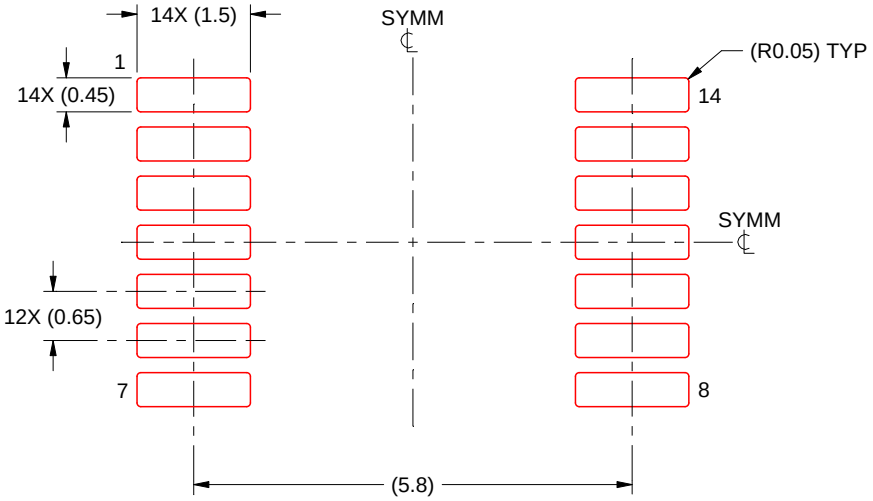

SOLDER PASTE EXAMPLE
BASED ON 0.125 mm THICK STENCIL
SCALE: 10X

4220202/B 12/2023

NOTES: (continued)

8. Laser cutting apertures with trapezoidal walls and rounded corners may offer better paste release. IPC-7525 may have alternate design recommendations.
9. Board assembly site may have different recommendations for stencil design.

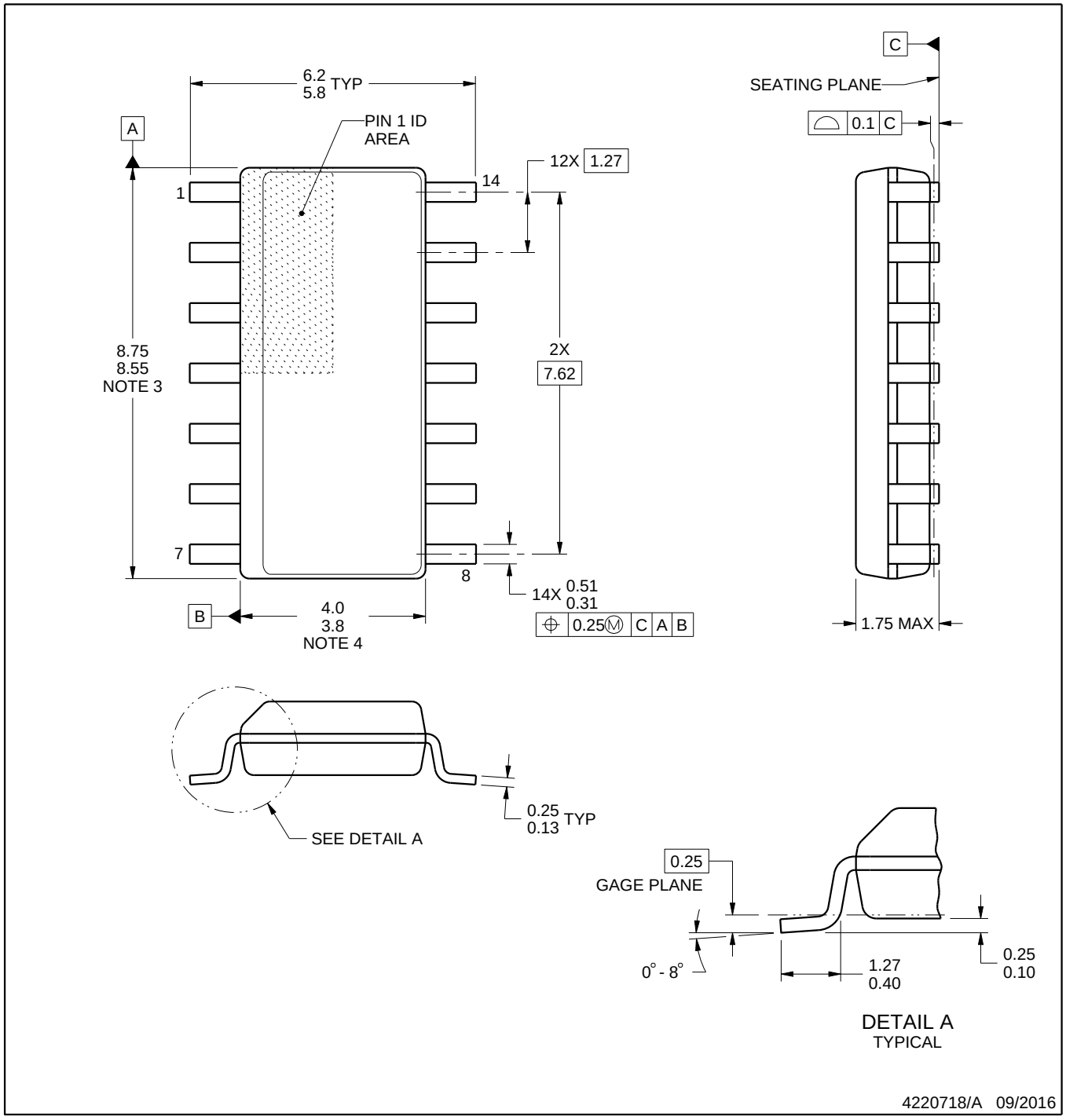

NOTES:

1. All linear dimensions are in millimeters. Dimensions in parenthesis are for reference only. Dimensioning and tolerancing per ASME Y14.5M.
2. This drawing is subject to change without notice.
3. This dimension does not include mold flash, protrusions, or gate burrs. Mold flash, protrusions, or gate burrs shall not exceed 0.15 mm, per side.
4. This dimension does not include interlead flash. Interlead flash shall not exceed 0.43 mm, per side.
5. Reference JEDEC registration MS-012, variation AB.

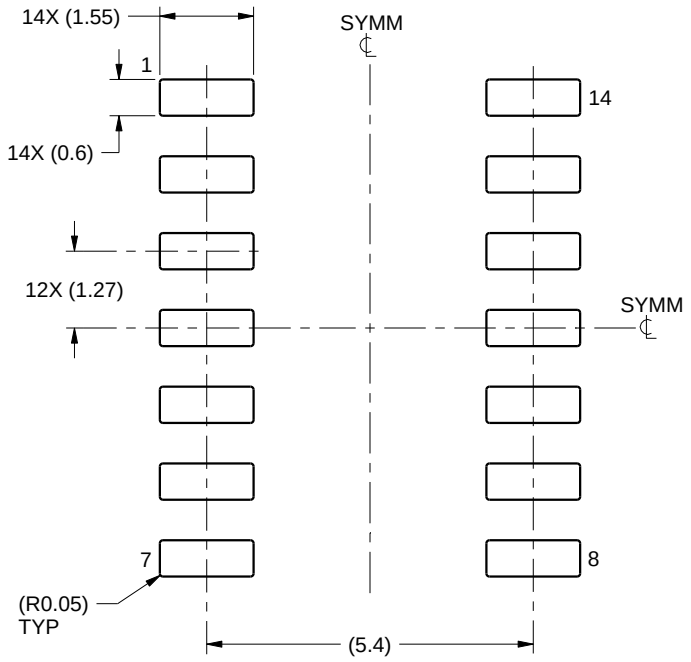

LAND PATTERN EXAMPLE
SCALE:8X

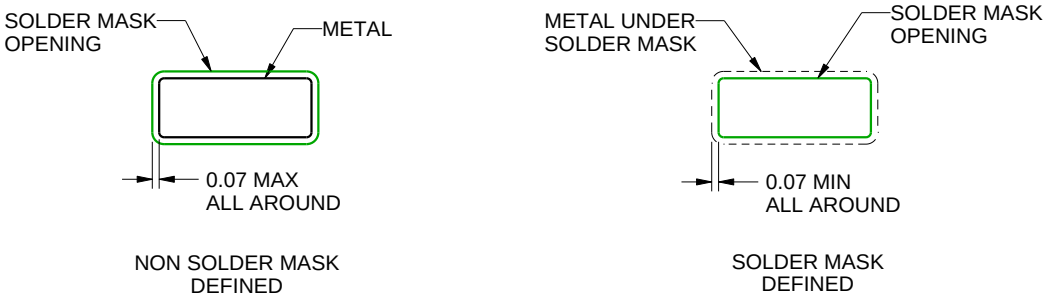

SOLDER MASK DETAILS

4220718/A 09/2016

NOTES: (continued)

6. Publication IPC-7351 may have alternate designs.
7. Solder mask tolerances between and around signal pads can vary based on board fabrication site.

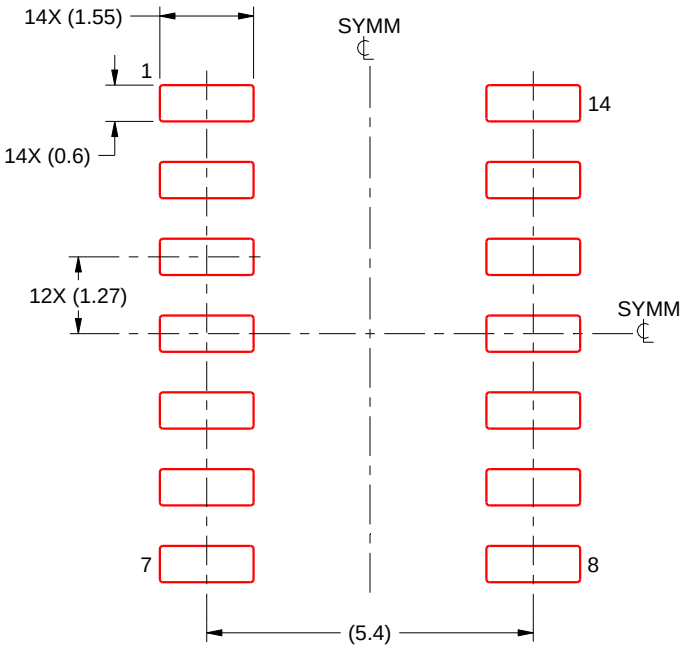

SOLDER PASTE EXAMPLE
BASED ON 0.125 mm THICK STENCIL
SCALE:8X

4220718/A 09/2016

NOTES: (continued)

8. Laser cutting apertures with trapezoidal walls and rounded corners may offer better paste release. IPC-7525 may have alternate design recommendations.
9. Board assembly site may have different recommendations for stencil design.

MECHANICAL DATA

NS (R-PDSO-G)** **PLASTIC SMALL-OUTLINE PACKAGE**

14-PINS SHOWN

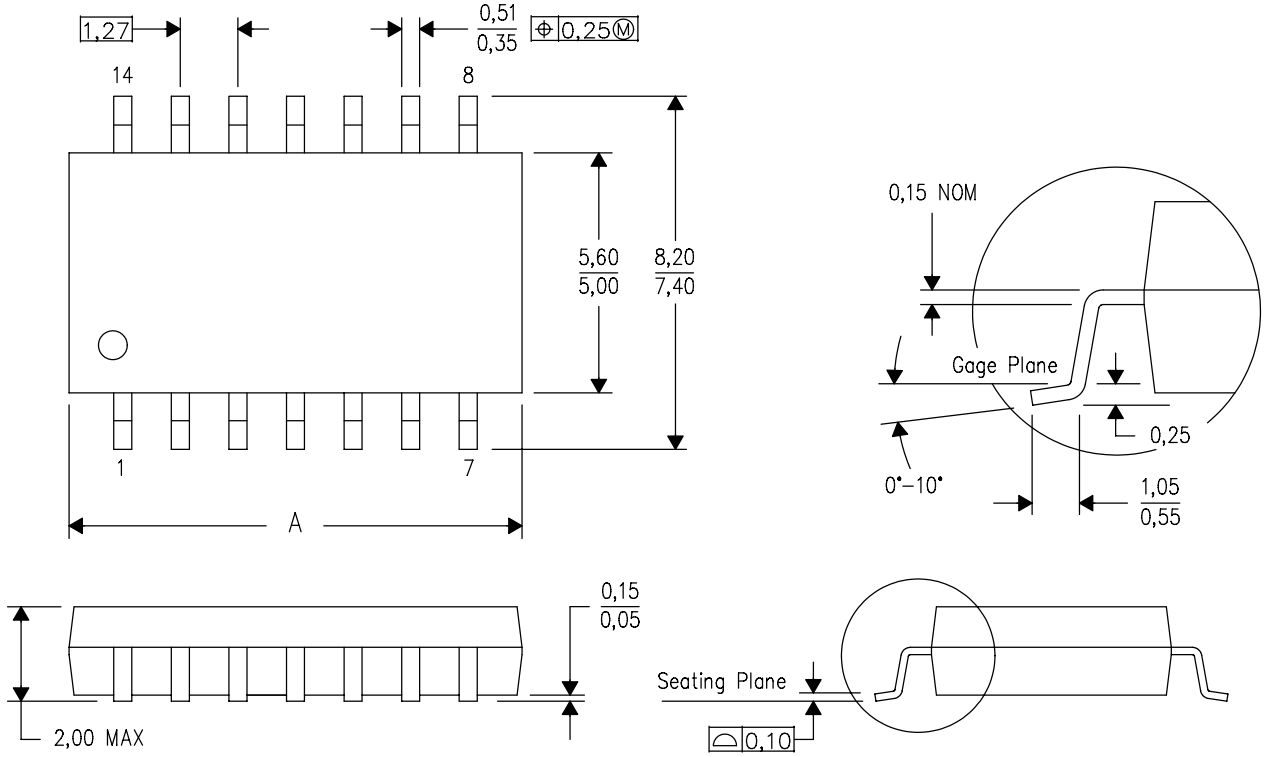

DIM \ PINS **	14	16	20	24
A MAX	10,50	10,50	12,90	15,30
A MIN	9,90	9,90	12,30	14,70

4040062/C 03/03

NOTES:
A. All linear dimensions are in millimeters.
B. This drawing is subject to change without notice.
C. Body dimensions do not include mold flash or protrusion, not to exceed 0,15.

IMPORTANT NOTICE AND DISCLAIMER

TI PROVIDES TECHNICAL AND RELIABILITY DATA (INCLUDING DATA SHEETS), DESIGN RESOURCES (INCLUDING REFERENCE DESIGNS), APPLICATION OR OTHER DESIGN ADVICE, WEB TOOLS, SAFETY INFORMATION, AND OTHER RESOURCES “AS IS” AND WITH ALL FAULTS, AND DISCLAIMS ALL WARRANTIES, EXPRESS AND IMPLIED, INCLUDING WITHOUT LIMITATION ANY IMPLIED WARRANTIES OF MERCHANTABILITY, FITNESS FOR A PARTICULAR PURPOSE OR NON-INFRINGEMENT OF THIRD PARTY INTELLECTUAL PROPERTY RIGHTS.

These resources are intended for skilled developers designing with TI products. You are solely responsible for (1) selecting the appropriate TI products for your application, (2) designing, validating and testing your application, and (3) ensuring your application meets applicable standards, and any other safety, security, regulatory or other requirements.

These resources are subject to change without notice. TI grants you permission to use these resources only for development of an application that uses the TI products described in the resource. Other reproduction and display of these resources is prohibited. No license is granted to any other TI intellectual property right or to any third party intellectual property right. TI disclaims responsibility for, and you will fully indemnify TI and its representatives against, any claims, damages, costs, losses, and liabilities arising out of your use of these resources.

TI’s products are provided subject to TI’s Terms of Sale or other applicable terms available either on ti.com or provided in conjunction with such TI products. TI’s provision of these resources does not expand or otherwise alter TI’s applicable warranties or warranty disclaimers for TI products.

TI objects to and rejects any additional or different terms you may have proposed.

Mailing Address: Texas Instruments, Post Office Box 655303, Dallas, Texas 75265
Copyright © 2025, Texas Instruments Incorporated