- **3-State Q Outputs Drive Bus Lines Directly**
- **Counter Operation Independent of 3-State Output**
- **Fully Synchronous Clear, Count, and Load**
- **Asynchronous Clear Is Also Provided**
- **Fully Cascadable**
- **Package Options Include Plastic Small-Outline (DW) Packages, Ceramic Chip Carriers (FK), and Standard Plastic (N) and Ceramic (J) 300-mil DIPs**

SN54ALS569A . . . J PACKAGE
SN74ALS568A, SN74ALS569A . . . DW OR N PACKAGE
(TOP VIEW)

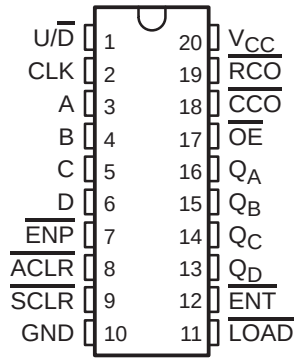

SN54ALS569A . . . FK PACKAGE
(TOP VIEW)

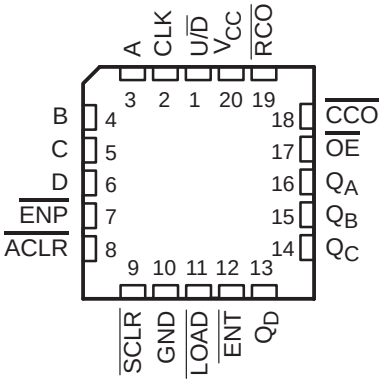

description

The SN74ALS568A decade counter and ′ALS569A binary counters are programmable, count up or down, and offer both synchronous and asynchronous clearing. All synchronous functions are executed on the positive-going edge of the clock (CLK) input.

The clear function is initiated by applying a low level to either asynchronous clear ($\overline{ACLR}$) or synchronous clear ($\overline{SCLR}$). Asynchronous (direct) clearing overrides all other functions of the device, while synchronous clearing overrides only the other synchronous functions. Data is loaded from the A, B, C, and D inputs by holding load ($\overline{LOAD}$) low during a positive-going clock transition. The counting function is enabled only when enable P ($\overline{ENP}$) and enable T ($\overline{ENT}$) are low and $\overline{ACLR}$, $\overline{SCLR}$, and $\overline{LOAD}$ are high. The up/down (U/$\overline{D}$) input controls the direction of the count. These counters count up when U/$\overline{D}$ is high and count down when U/$\overline{D}$ is low.

A high level at the output-enable ($\overline{OE}$) input forces the Q outputs into the high-impedance state, and a low level enables those outputs. Counting is independent of $\overline{OE}$. $\overline{ENT}$ is fed forward to enable the ripple-carry output ($\overline{RCO}$) to produce a low-level pulse while the count is zero (all Q outputs low) when counting down or maximum (9 or 15) when counting up. The clocked carry output ($\overline{CCO}$) produces a low-level pulse for a duration equal to that of the low level of the clock when $\overline{RCO}$ is low and the counter is enabled (both $\overline{ENP}$ and $\overline{ENT}$ are low); otherwise, $\overline{CCO}$ is high. $\overline{CCO}$ does not have the glitches commonly associated with a ripple-carry output. Cascading is normally accomplished by connecting $\overline{RCO}$ or $\overline{CCO}$ of the first counter to $\overline{ENT}$ of the next counter. However, for very high-speed counting, $\overline{RCO}$ should be used for cascading since $\overline{CCO}$ does not become active until the clock returns to the low level.

The SN54ALS569A is characterized for operation over the full military temperature range of –55°C to 125°C. The SN74ALS568A and SN74ALS569A are characterized for operation from 0°C to 70°C.

PRODUCTION DATA information is current as of publication date. Products conform to specifications per the terms of Texas Instruments standard warranty. Production processing does not necessarily include testing of all parameters.

Copyright © 1995, Texas Instruments Incorporated

FUNCTION TABLE

INPUTS								OPERATION
$\overline{OE}$	$\overline{ACLR}$	$\overline{SCLR}$	$\overline{LOAD}$	$\overline{ENT}$	$\overline{ENP}$	$U/\overline{D}$	CLK	
H	X	X	X	X	X	X	X	Q outputs disabled
L	L	X	X	X	X	X	X	Asynchronous clear
L	H	L	X	X	X	X	↑	Synchronous clear
L	H	H	L	X	X	X	↑	Load
L	H	H	H	L	L	H	↑	Count up
L	H	H	H	L	L	L	↑	Count down
L	H	H	H	H	X	X	X	Inhibit count
L	H	H	H	X	H	X	X	Inhibit count

logic symbols†

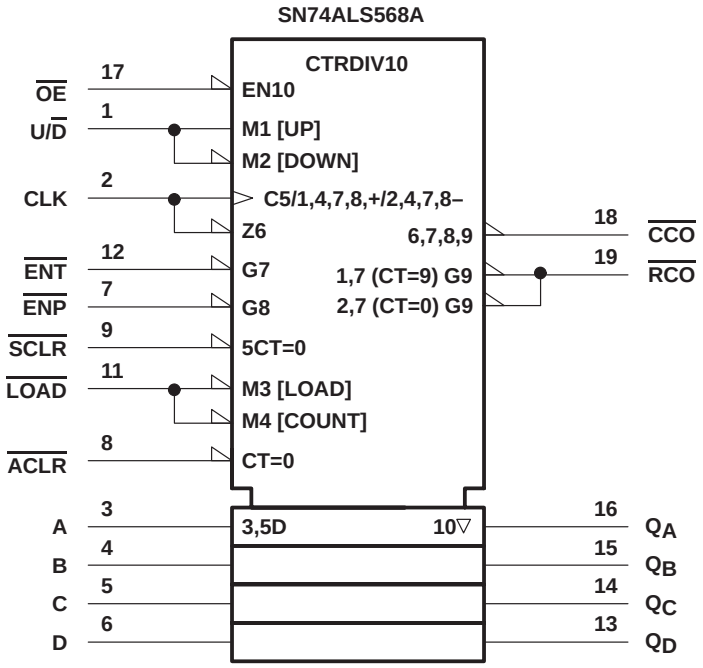

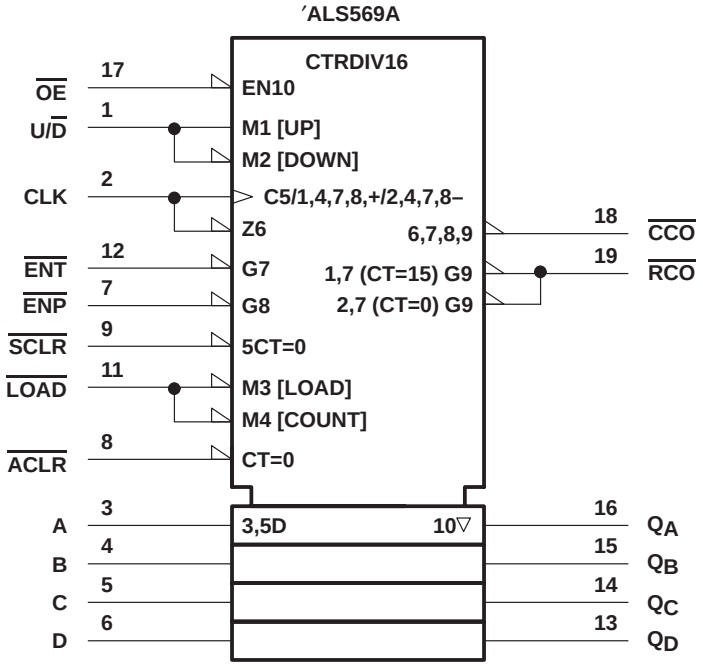

† These symbols are in accordance with ANSI/IEEE Std 91-1984 and IEC Publication 617-12.

logic diagrams (positive logic)

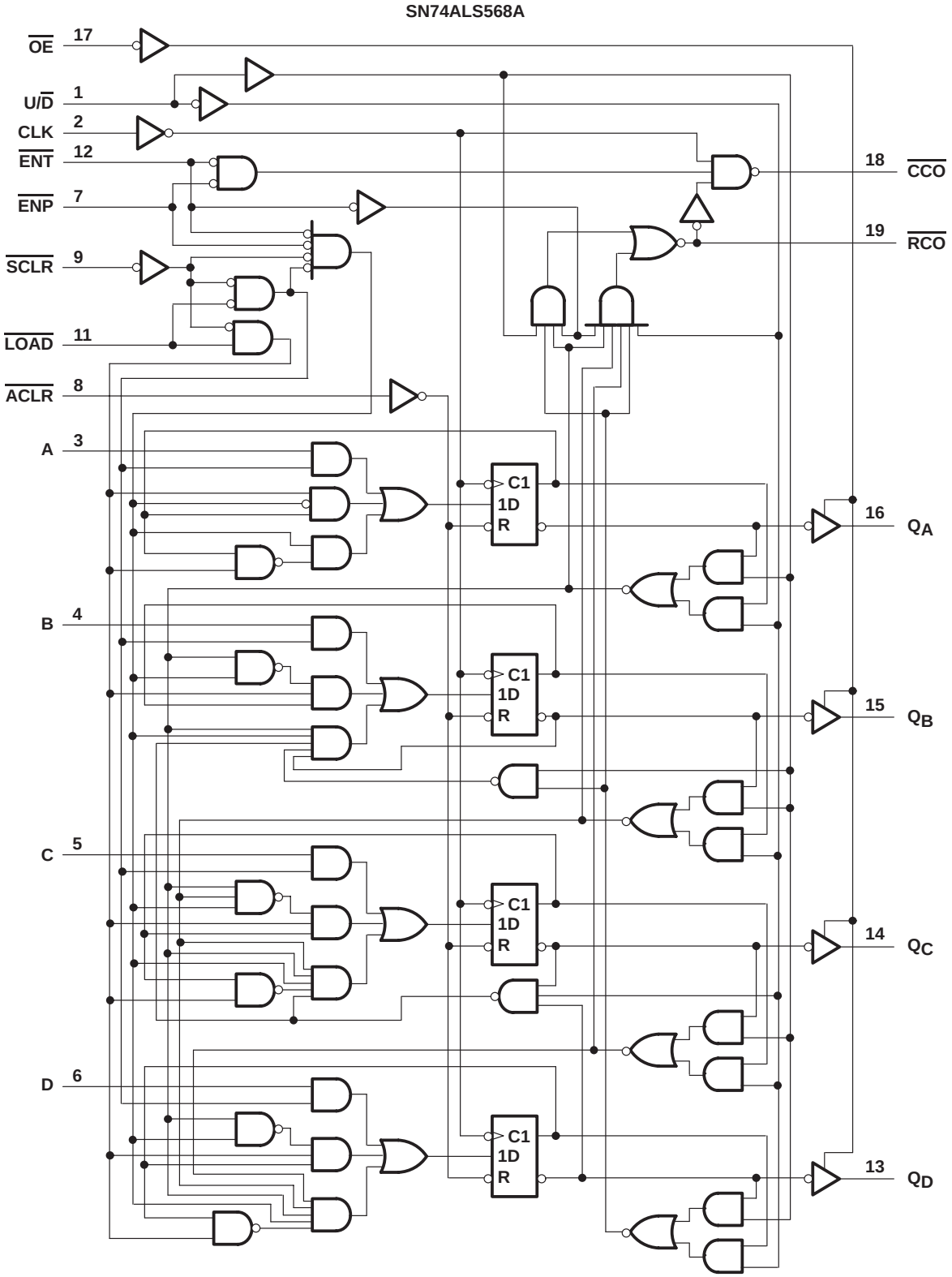

logic diagrams (positive logic) (continued)

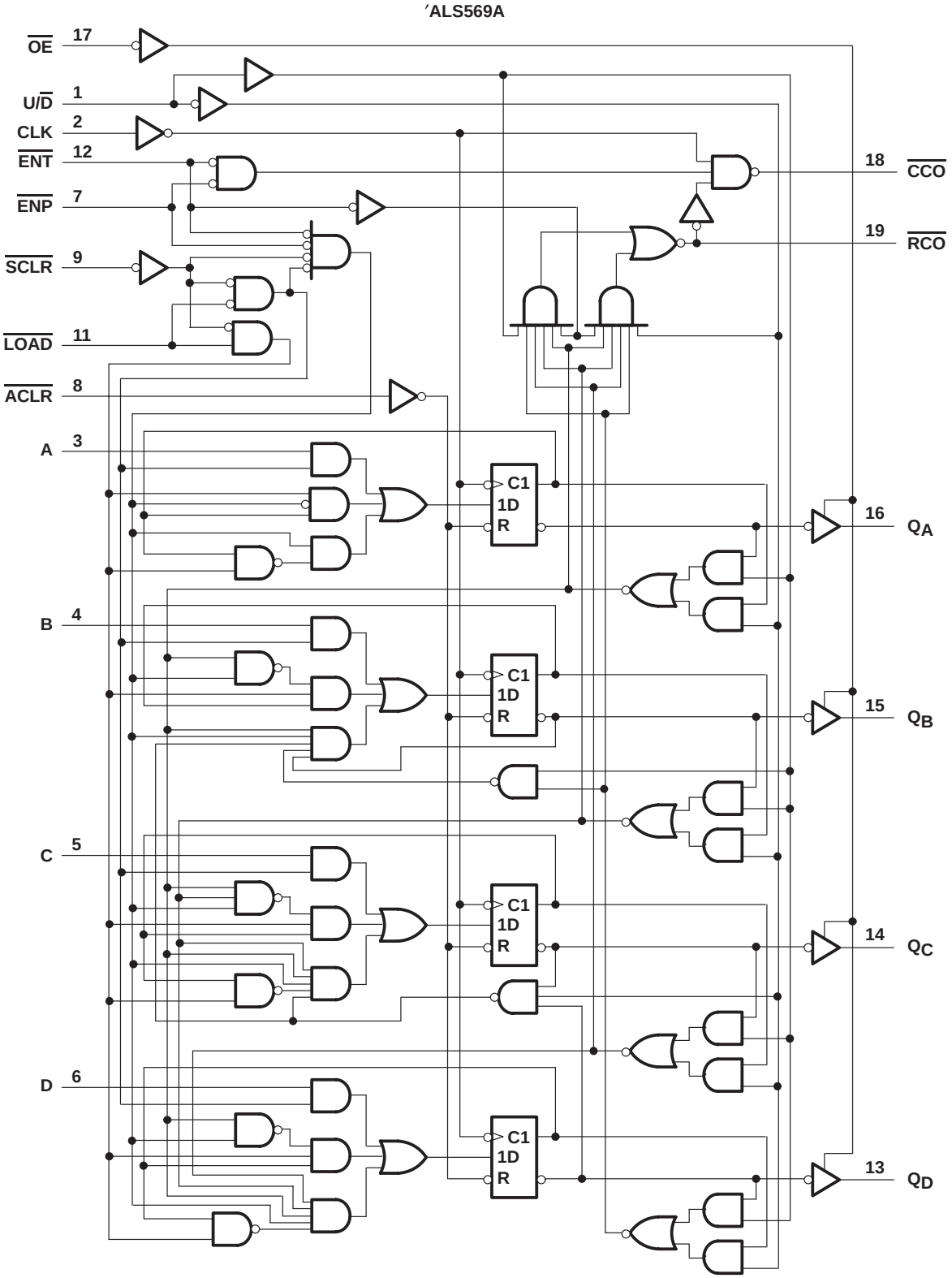

typical load, count, and inhibit sequences

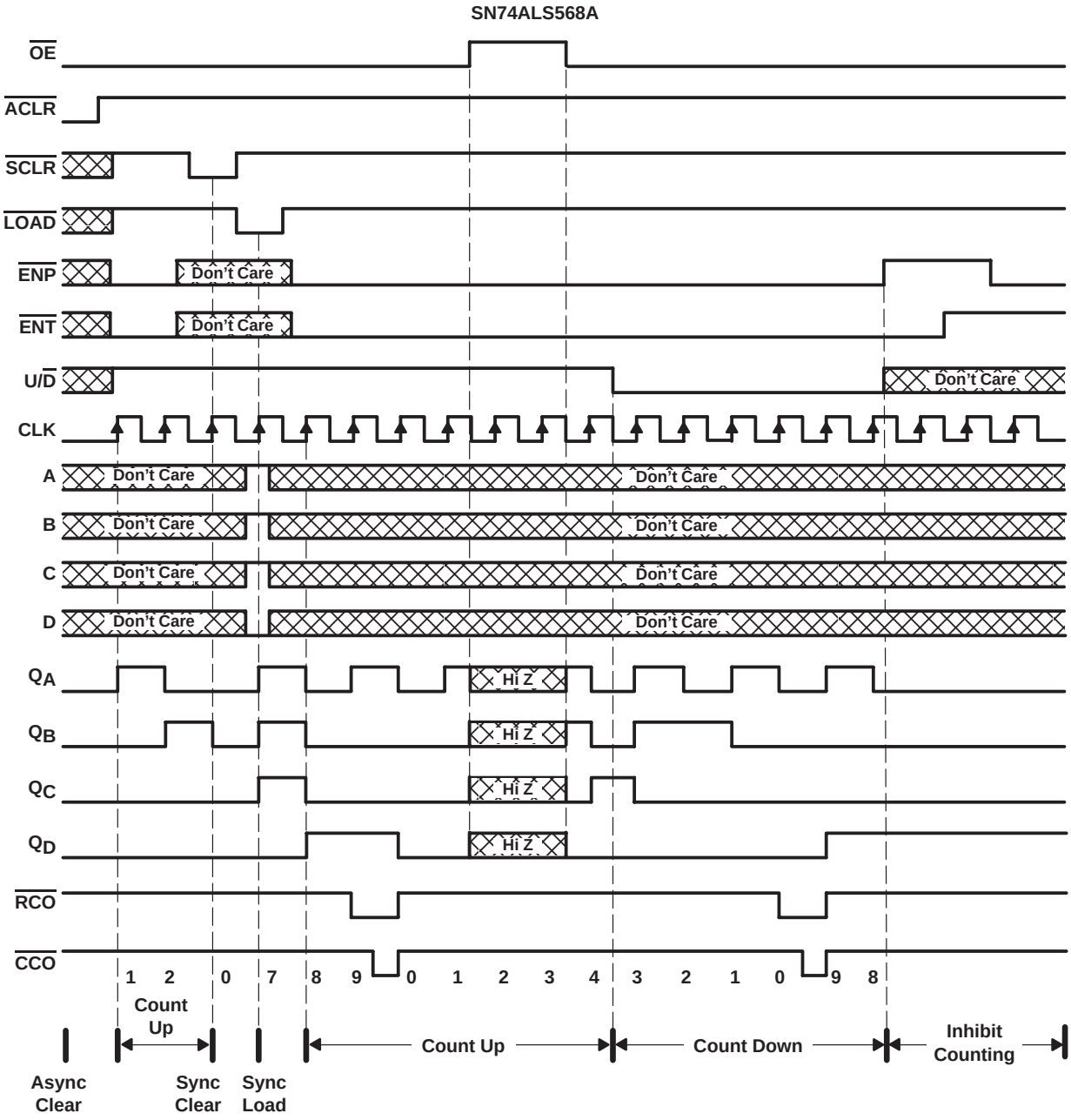

typical load, count, and inhibit sequences (continued)

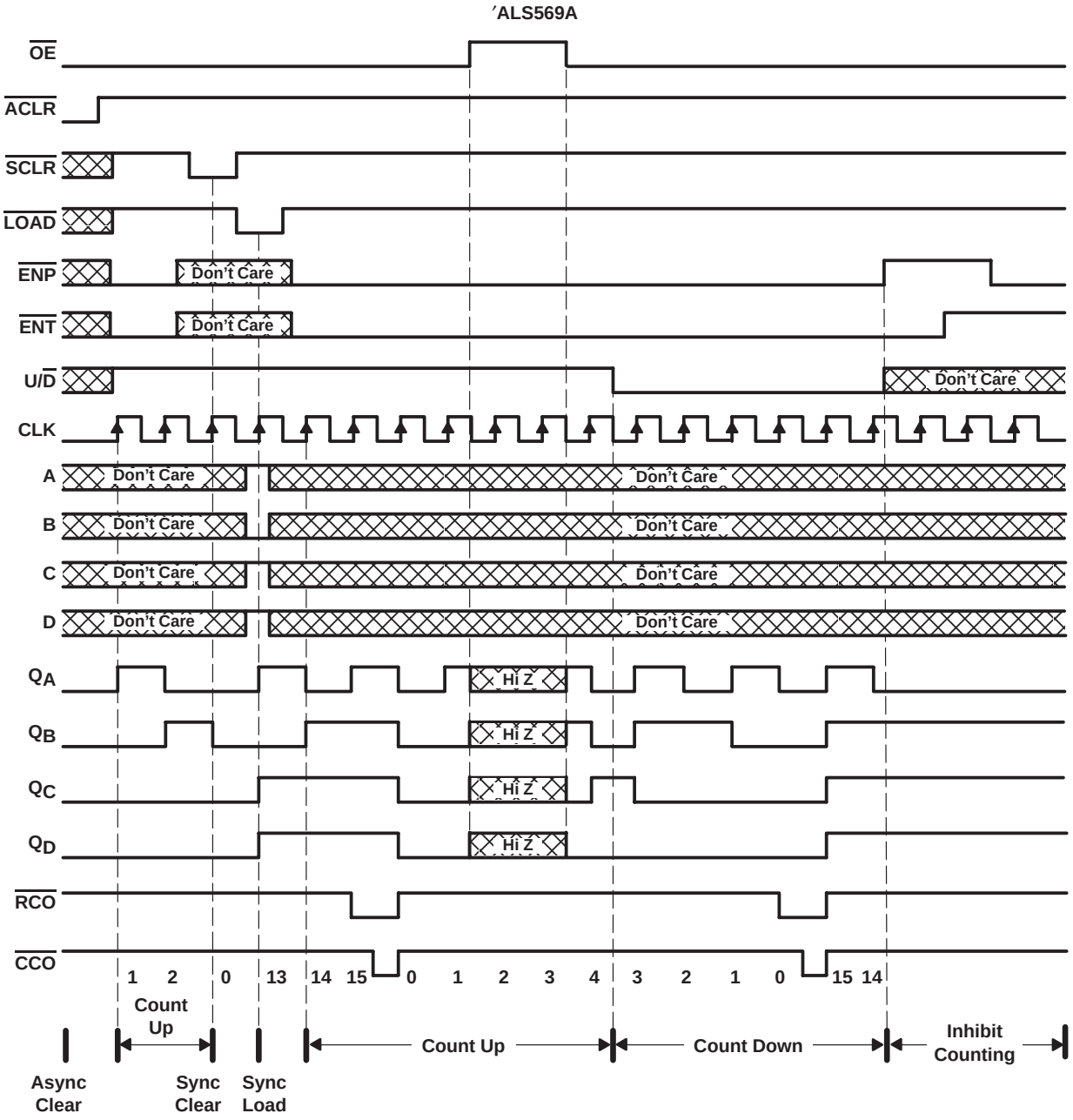

absolute maximum ratings over operating free-air temperature range (unless otherwise noted)†

Supply voltage, V_{CC} . . . . . 7 V
Input voltage, V_I . . . . . 7 V
Voltage applied to a disabled 3-state output . . . . . 5.5 V
Operating free-air temperature range, T_A: SN54ALS569A . . . . . –55°C to 125°C
SN74ALS568A, SN74ALS569A . . . . . 0°C to 70°C
Storage temperature range . . . . . –65°C to 150°C

† Stresses beyond those listed under "absolute maximum ratings" may cause permanent damage to the device. These are stress ratings only, and functional operation of the device at these or any other conditions beyond those indicated under "recommended operating conditions" is not implied. Exposure to absolute-maximum-rated conditions for extended periods may affect device reliability.

recommended operating conditions

				SN54ALS569A			SN74ALS568A SN74ALS569A			UNIT
				MIN	NOM	MAX	MIN	NOM	MAX	
V_{CC}	Supply voltage			4.5	5	5.5	4.5	5	5.5	V
V_{IH}	High-level input voltage			2			2			V
V_{IL}	Low-level input voltage					0.7			0.8	V
I_{OH}	High-level output current	Q outputs				–1			–2.6	mA
		$\overline{CCO}$ and $\overline{RCO}$				–0.4			–0.4	
I_{OL}	Low-level output current	Q outputs				12			24	mA
		$\overline{CCO}$ and $\overline{RCO}$				4			8	
f_{clock}	Clock frequency	SN74ALS568A					0		20	MHz
		′ALS569A		0		22	0		30	
t_w	Pulse duration	$\overline{ACLR}$ or $\overline{LOAD}$ low		20			15			ns
		SN74ALS568A	CLK high				25			
			CLK low				25			
		′ALS569A	CLK high	20			16.5			
			CLK low	23			16.5			
t_{su}	Setup time before CLK↑	Data at A, B, C, D		25			20			ns
		$\overline{ENP}$, $\overline{ENT}$	High	35			30			
			Low	25			20			
		$\overline{SCLR}$	Low	20			15			
			High (inactive)	35			30			
		$\overline{LOAD}$	Low	20			15			
			High (inactive)	35			30			
		U/$\overline{D}$		35			30			
		$\overline{ACLR}$ inactive		10			10			
t_h	Hold time after CLK↑ for any input			0			0			ns
T_A	Operating free-air temperature			–55		125	0		70	°C

electrical characteristics over recommended operating free-air temperature range (unless otherwise noted)

PARAMETER		TEST CONDITIONS		SN54ALS569A			SN74ALS568A SN74ALS569A			UNIT
				MIN	TYP†	MAX	MIN	TYP†	MAX	
V_{IK}		V_{CC} = 4.5 V,	I_I = –18 mA			–1.5			–1.5	V
V_{OH}	All outputs	V_{CC} = 4.5 V to 5.5 V,	I_{OH} = –0.4 mA	V_{CC} –2			V_{CC} –2			V
	Q outputs	V_{CC} = 4.5 V	I_{OH} = –1 mA	2.4	3.3					
			I_{OH} = –2.6 mA				2.4	3.2		
V_{OL}	Q outputs	V_{CC} = 4.5 V	I_{OL} = 12 mA		0.25	0.4		0.25	0.4	V
			I_{OL} = 24 mA					0.35	0.5	
	$\overline{CCO}$ and $\overline{RCO}$	V_{CC} = 4.5 V	I_{OL} = 4 mA		0.25	0.4		0.25	0.4	
			I_{OL} = 8 mA					0.35	0.5	
I_{OZH}		V_{CC} = 5.5 V,	V_O = 2.7 V			20			20	µA
I_{OZL}		V_{CC} = 5.5 V,	V_O = 0.4 V			–20			–20	µA
I_I		V_{CC} = 5.5 V,	V_I = 7 V			0.1			0.1	mA
I_{IH}		V_{CC} = 5.5 V,	V_I = 2.7 V			20			20	µA
I_{IL}		V_{CC} = 5.5 V,	V_I = 0.4 V			–0.2			–0.2	mA
I_O‡	$\overline{CCO}$ and $\overline{RCO}$	V_{CC} = 5.5 V,	V_O = 2.25 V	–15		–70	–15		–70	mA
	Q outputs			–20		–112	–30		–112	
I_{CC}		V_{CC} = 5.5 V	Outputs high		16	26		16	26	mA
			Outputs low		20	32		20	32	
			Outputs disabled		20	32		20	32	

† All typical values are at V_{CC} = 5 V, T_A = 25°C.
‡ The output conditions have been chosen to produce a current that closely approximates one half of the true short-circuit output current, I_{OS}.

switching characteristics (see Figure 1)

PARAMETER	FROM (INPUT)	TO (OUTPUT)	V_{CC} = 4.5 V to 5.5 V, C_L = 50 pF, R1 = 500 Ω, R2 = 500 Ω, T_A = MIN to MAX†				UNIT
			SN54ALS569A		SN74ALS568A SN74ALS569A		
			MIN	MAX	MIN	MAX	
f_{max}	SN74ALS568A				20		MHz
	′ALS569A		22		30		
t_{PLH}	CLK	Any Q	4	21	4	13	ns
t_{PHL}			7	19	7	16	
t_{PLH}	CLK	$\overline{RCO}$	12	37	12	28	ns
t_{PHL}			10	28	10	19	
t_{PLH}	CLK	$\overline{CCO}$	5	17	5	13	ns
t_{PHL}			6	30	6	25	
t_{PLH}	U/$\overline{D}$	$\overline{RCO}$	9	31	9	23	ns
t_{PHL}			9	33	9	19	
t_{PLH}	$\overline{ENT}$	$\overline{RCO}$	6	21	6	15	ns
t_{PHL}			4	20	4	13	
t_{PLH}	$\overline{ENT}$	$\overline{CCO}$	5	18	5	13	ns
t_{PHL}			9	32	9	23	
t_{PLH}	$\overline{ENP}$	$\overline{CCO}$	4	18	4	12	ns
t_{PHL}			5	18	5	14	
t_{PHL}	$\overline{ACLR}$	Any Q	9	25	9	20	ns
t_{PZH}	$\overline{OE}$	Any Q	6	23	6	18	ns
t_{PZL}			6	29	6	24	
t_{PHZ}	$\overline{OE}$	Any Q	1	12	1	10	ns
t_{PLZ}			3	29	3	13	

† For conditions shown as MIN or MAX, use the appropriate value specified under recommended operating conditions.

PARAMETER MEASUREMENT INFORMATION
SERIES 54ALS/74ALS AND 54AS/74AS DEVICES

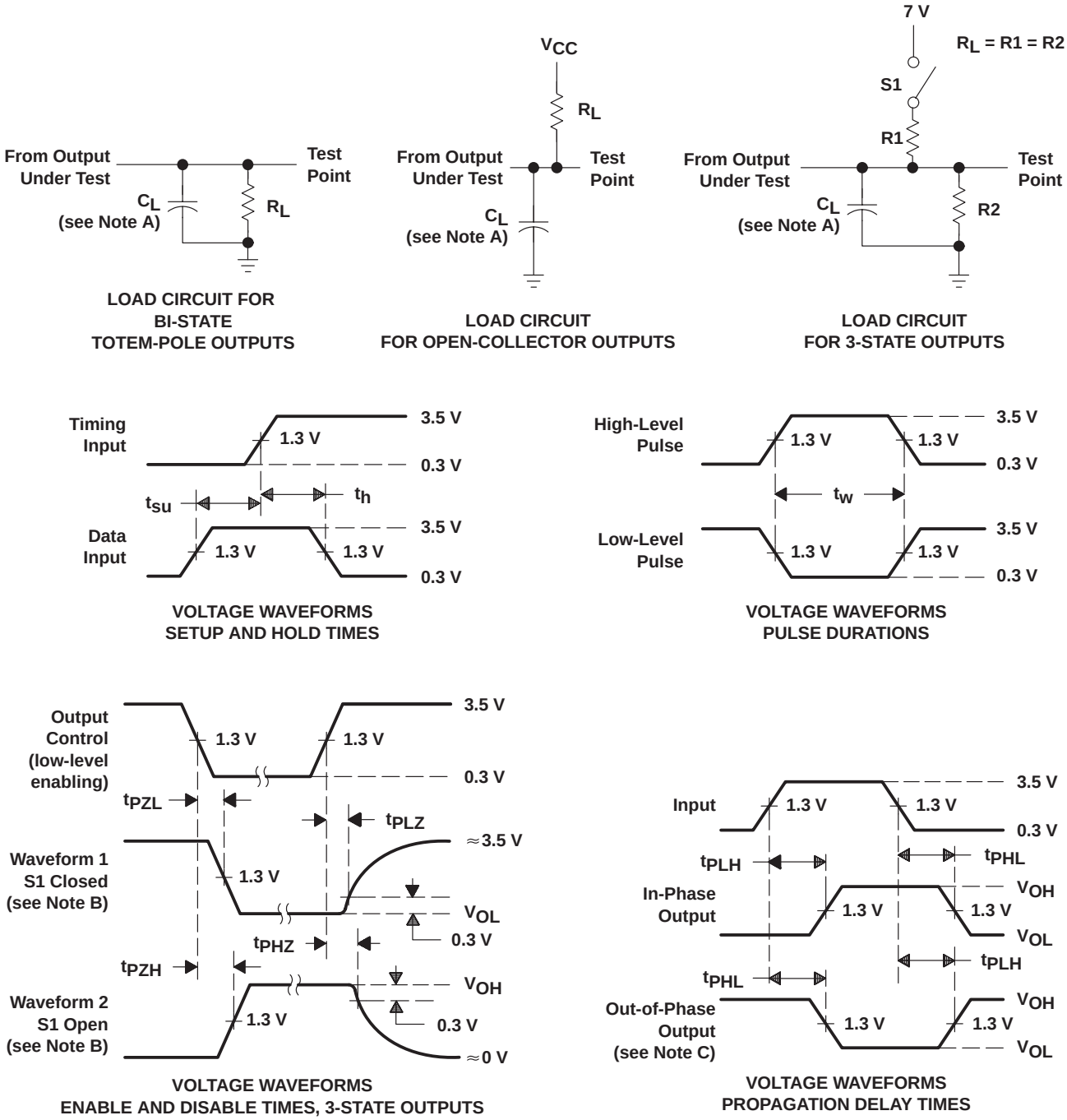

NOTES: A. C_L includes probe and jig capacitance.
B. Waveform 1 is for an output with internal conditions such that the output is low except when disabled by the output control. Waveform 2 is for an output with internal conditions such that the output is high except when disabled by the output control.
C. When measuring propagation delay items of 3-state outputs, switch S1 is open.
D. All input pulses have the following characteristics: PRR ≤ 1 MHz, $t_r = t_f$ = 2 ns, duty cycle = 50%.
E. The outputs are measured one at a time with one transition per measurement.

Figure 1. Load Circuits and Voltage Waveforms

PACKAGING INFORMATION

Orderable part number	Status (1)	Material type (2)	Package | Pins	Package qty | Carrier	RoHS (3)	Lead finish/ Ball material (4)	MSL rating/ Peak reflow (5)	Op temp (°C)	Part marking (6)
83025022A	Active	Production	LCCC (FK) | 20	55 | TUBE	No	SNPB	N/A for Pkg Type	-55 to 125	83025022A SNJ54ALS 569AFK
8302502RA	Active	Production	CDIP (J) | 20	20 | TUBE	No	SNPB	N/A for Pkg Type	-55 to 125	8302502RA SNJ54ALS569AJ
SN54ALS569AJ	Active	Production	CDIP (J) | 20	20 | TUBE	No	SNPB	N/A for Pkg Type	-55 to 125	SN54ALS569AJ
SN54ALS569AJ.A	Active	Production	CDIP (J) | 20	20 | TUBE	No	SNPB	N/A for Pkg Type	-55 to 125	SN54ALS569AJ
SN74ALS569ADWR	Active	Production	SOIC (DW) | 20	2000 | LARGE T&R	Yes	NIPDAU	Level-1-260C-UNLIM	0 to 70	ALS569A
SN74ALS569ADWR.A	Active	Production	SOIC (DW) | 20	2000 | LARGE T&R	Yes	NIPDAU	Level-1-260C-UNLIM	0 to 70	ALS569A
SN74ALS569AN	Active	Production	PDIP (N) | 20	20 | TUBE	Yes	NIPDAU	N/A for Pkg Type	0 to 70	SN74ALS569AN
SN74ALS569AN.A	Active	Production	PDIP (N) | 20	20 | TUBE	Yes	NIPDAU	N/A for Pkg Type	0 to 70	SN74ALS569AN
SNJ54ALS569AFK	Active	Production	LCCC (FK) | 20	55 | TUBE	No	SNPB	N/A for Pkg Type	-55 to 125	83025022A SNJ54ALS 569AFK
SNJ54ALS569AFK.A	Active	Production	LCCC (FK) | 20	55 | TUBE	No	SNPB	N/A for Pkg Type	-55 to 125	83025022A SNJ54ALS 569AFK
SNJ54ALS569AJ	Active	Production	CDIP (J) | 20	20 | TUBE	No	SNPB	N/A for Pkg Type	-55 to 125	8302502RA SNJ54ALS569AJ
SNJ54ALS569AJ.A	Active	Production	CDIP (J) | 20	20 | TUBE	No	SNPB	N/A for Pkg Type	-55 to 125	8302502RA SNJ54ALS569AJ

(1) **Status:** For more details on status, see our product life cycle.

(2) **Material type:** When designated, preproduction parts are prototypes/experimental devices, and are not yet approved or released for full production. Testing and final process, including without limitation quality assurance, reliability performance testing, and/or process qualification, may not yet be complete, and this item is subject to further changes or possible discontinuation. If available for ordering, purchases will be subject to an additional waiver at checkout, and are intended for early internal evaluation purposes only. These items are sold without warranties of any kind.

(3) **RoHS values:** Yes, No, RoHS Exempt. See the TI RoHS Statement for additional information and value definition.

(4) **Lead finish/Ball material:** Parts may have multiple material finish options. Finish options are separated by a vertical ruled line. Lead finish/Ball material values may wrap to two lines if the finish value exceeds the maximum column width.

(5) **MSL rating/Peak reflow:** The moisture sensitivity level ratings and peak solder (reflow) temperatures. In the event that a part has multiple moisture sensitivity ratings, only the lowest level per JEDEC standards is shown. Refer to the shipping label for the actual reflow temperature that will be used to mount the part to the printed circuit board.

(6) **Part marking:** There may be an additional marking, which relates to the logo, the lot trace code information, or the environmental category of the part.

Multiple part markings will be inside parentheses. Only one part marking contained in parentheses and separated by a "~" will appear on a part. If a line is indented then it is a continuation of the previous line and the two combined represent the entire part marking for that device.

Important Information and Disclaimer: The information provided on this page represents TI's knowledge and belief as of the date that it is provided. TI bases its knowledge and belief on information provided by third parties, and makes no representation or warranty as to the accuracy of such information. Efforts are underway to better integrate information from third parties. TI has taken and continues to take reasonable steps to provide representative and accurate information but may not have conducted destructive testing or chemical analysis on incoming materials and chemicals. TI and TI suppliers consider certain information to be proprietary, and thus CAS numbers and other limited information may not be available for release.

In no event shall TI's liability arising out of such information exceed the total purchase price of the TI part(s) at issue in this document sold by TI to Customer on an annual basis.

OTHER QUALIFIED VERSIONS OF SN54ALS569A, SN74ALS569A :

- Catalog : SN74ALS569A
- Military : SN54ALS569A

NOTE: Qualified Version Definitions:

- Catalog - TI's standard catalog product
- Military - QML certified for Military and Defense Applications

TAPE AND REEL INFORMATION

REEL DIMENSIONS

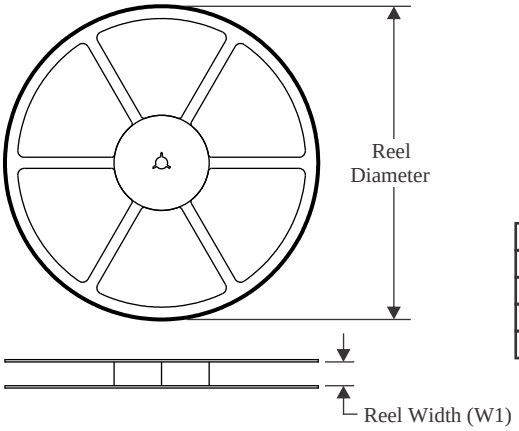

TAPE DIMENSIONS

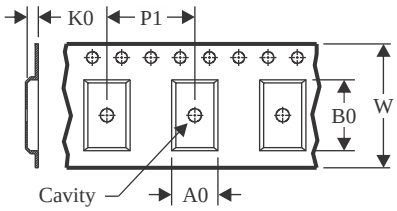

A0	Dimension designed to accommodate the component width
B0	Dimension designed to accommodate the component length
K0	Dimension designed to accommodate the component thickness
W	Overall width of the carrier tape
P1	Pitch between successive cavity centers

QUADRANT ASSIGNMENTS FOR PIN 1 ORIENTATION IN TAPE

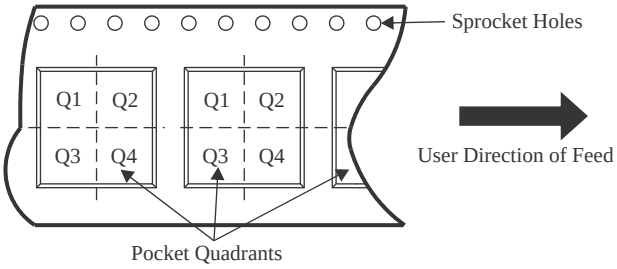

*All dimensions are nominal

Device	Package Type	Package Drawing	Pins	SPQ	Reel Diameter (mm)	Reel Width W1 (mm)	A0 (mm)	B0 (mm)	K0 (mm)	P1 (mm)	W (mm)	Pin1 Quadrant
SN74ALS569ADWR	SOIC	DW	20	2000	330.0	24.4	10.8	13.3	2.7	12.0	24.0	Q1

TAPE AND REEL BOX DIMENSIONS

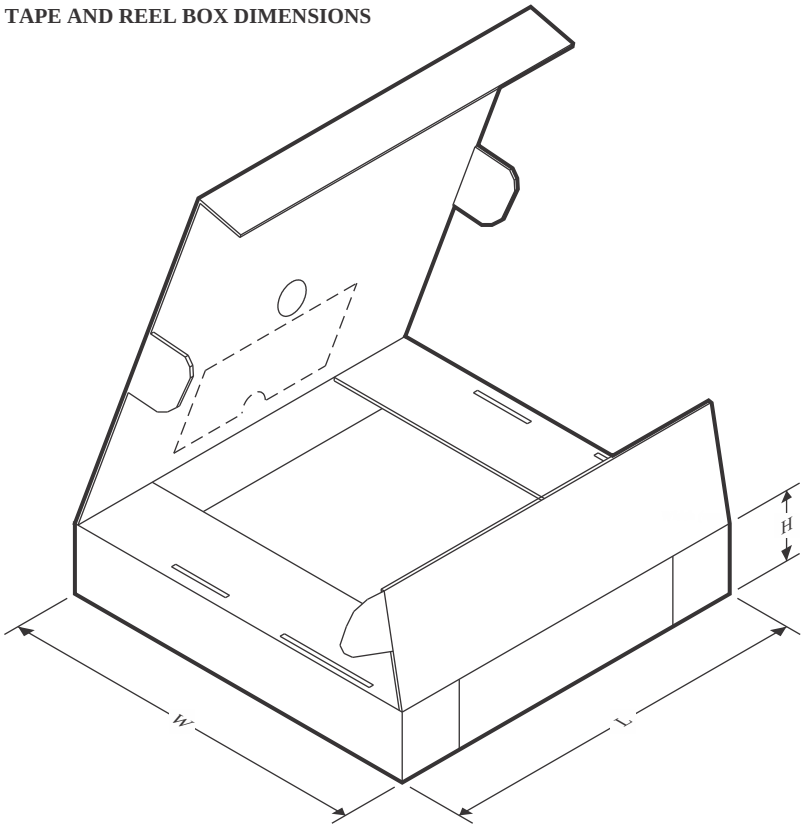

*All dimensions are nominal

Device	Package Type	Package Drawing	Pins	SPQ	Length (mm)	Width (mm)	Height (mm)
SN74ALS569ADWR	SOIC	DW	20	2000	367.0	367.0	45.0

TUBE

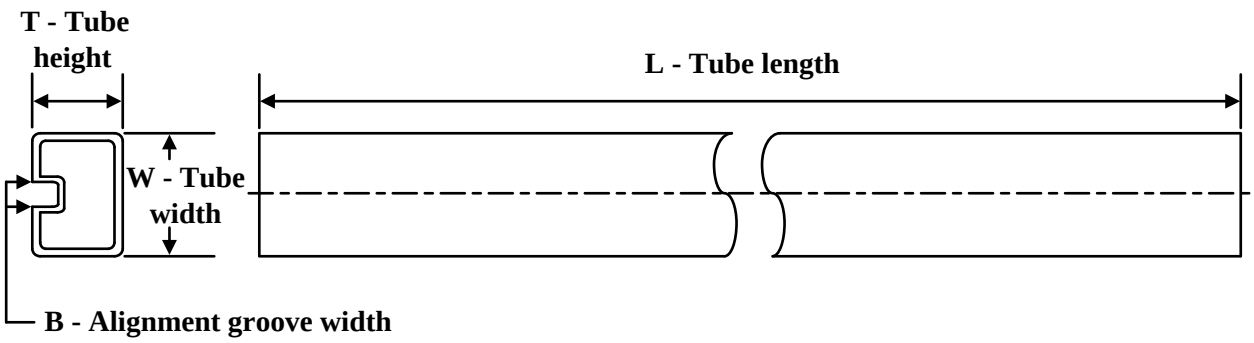

*All dimensions are nominal

Device	Package Name	Package Type	Pins	SPQ	L (mm)	W (mm)	T (µm)	B (mm)
83025022A	FK	LCCC	20	55	506.98	12.06	2030	NA
SN74ALS569AN	N	PDIP	20	20	506	13.97	11230	4.32
SN74ALS569AN.A	N	PDIP	20	20	506	13.97	11230	4.32
SNJ54ALS569AFK	FK	LCCC	20	55	506.98	12.06	2030	NA
SNJ54ALS569AFK.A	FK	LCCC	20	55	506.98	12.06	2030	NA

J (R–GDIP–T**) CERAMIC DUAL IN–LINE PACKAGE

14 LEADS SHOWN

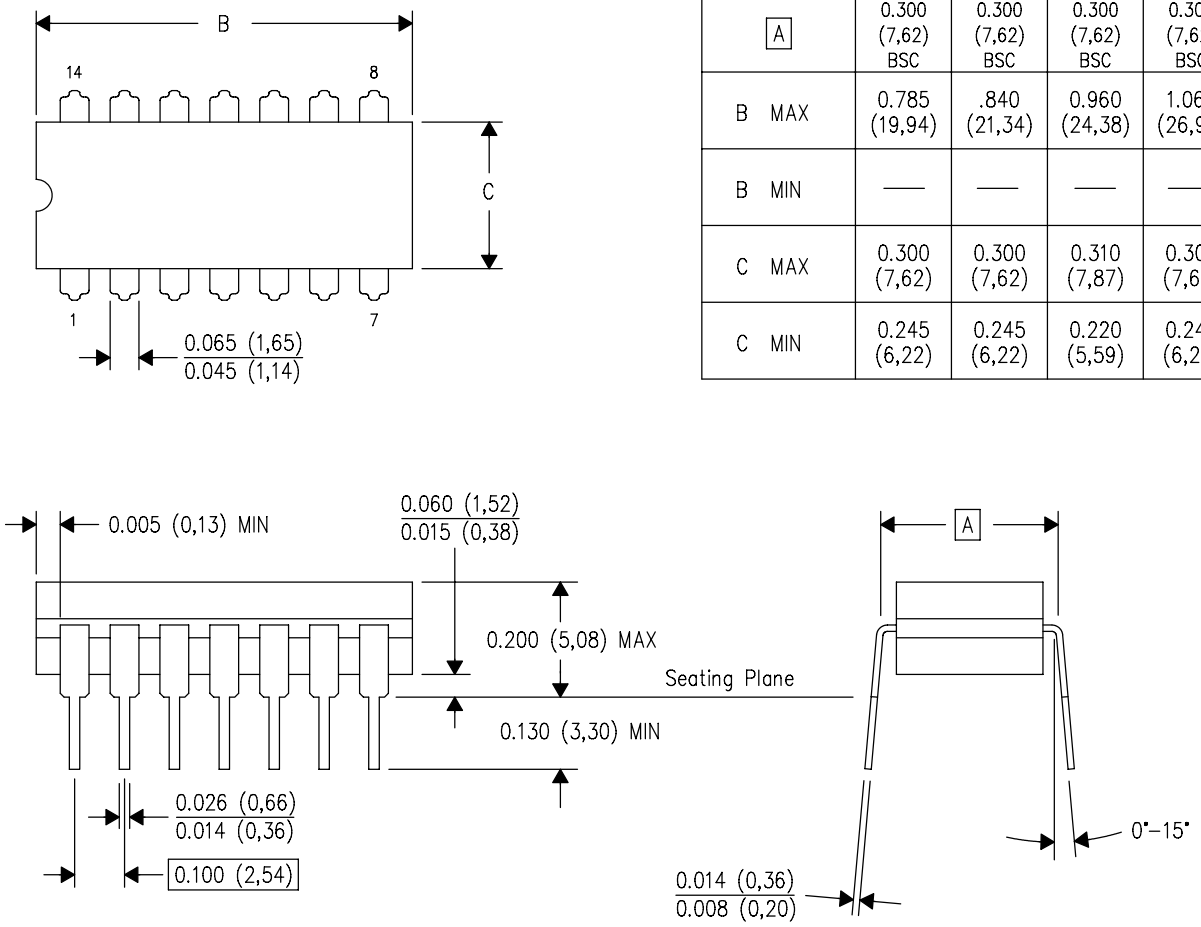

DIM \ PINS **	14	16	18	20
A	0.300 (7,62) BSC	0.300 (7,62) BSC	0.300 (7,62) BSC	0.300 (7,62) BSC
B MAX	0.785 (19,94)	.840 (21,34)	0.960 (24,38)	1.060 (26,92)
B MIN	—	—	—	—
C MAX	0.300 (7,62)	0.300 (7,62)	0.310 (7,87)	0.300 (7,62)
C MIN	0.245 (6,22)	0.245 (6,22)	0.220 (5,59)	0.245 (6,22)

4040083/F 03/03

NOTES:
- A. All linear dimensions are in inches (millimeters).
- B. This drawing is subject to change without notice.
- C. This package is hermetically sealed with a ceramic lid using glass frit.
- D. Index point is provided on cap for terminal identification only on press ceramic glass frit seal only.
- E. Falls within MIL STD 1835 GDIP1–T14, GDIP1–T16, GDIP1–T18 and GDIP1–T20.

GENERIC PACKAGE VIEW

FK 20

LCCC - 2.03 mm max height

8.89 x 8.89, 1.27 mm pitch

LEADLESS CERAMIC CHIP CARRIER

This image is a representation of the package family, actual package may vary.
Refer to the product data sheet for package details.

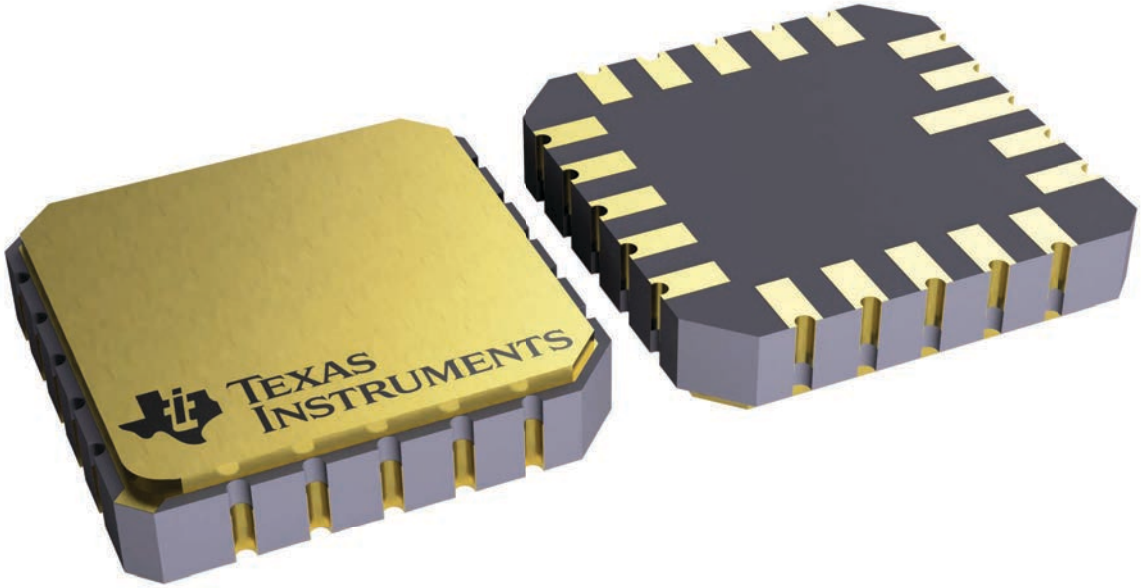

4229370VA\

N (R–PDIP–T**) PLASTIC DUAL–IN–LINE PACKAGE

16 PINS SHOWN

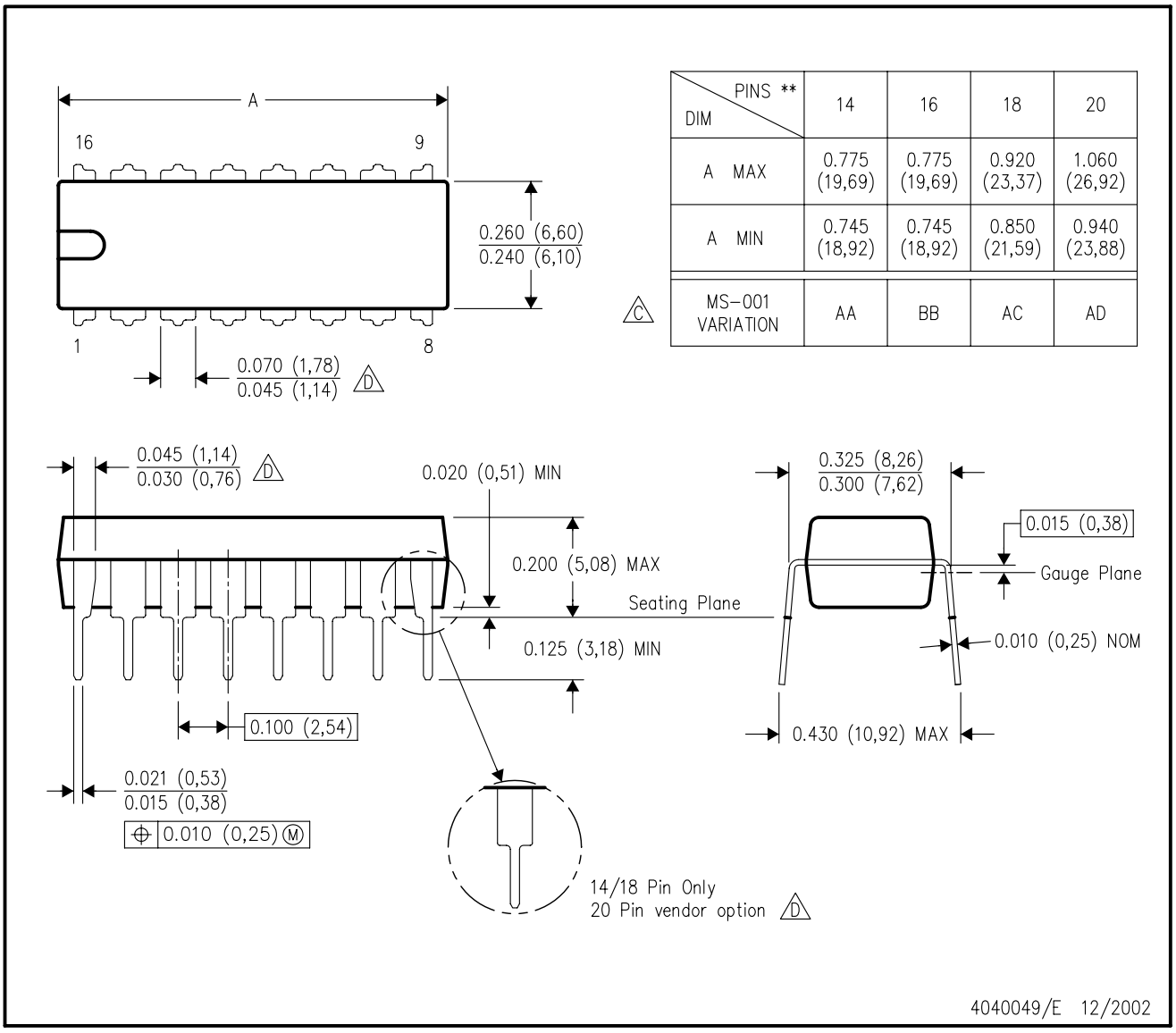

DIM \ PINS **	14	16	18	20
A MAX	0.775 (19,69)	0.775 (19,69)	0.920 (23,37)	1.060 (26,92)
A MIN	0.745 (18,92)	0.745 (18,92)	0.850 (21,59)	0.940 (23,88)
MS–001 VARIATION (C)	AA	BB	AC	AD

NOTES:
A. All linear dimensions are in inches (millimeters).
B. This drawing is subject to change without notice.
C. Falls within JEDEC MS–001, except 18 and 20 pin minimum body length (Dim A).
D. The 20 pin end lead shoulder width is a vendor option, either half or full width.

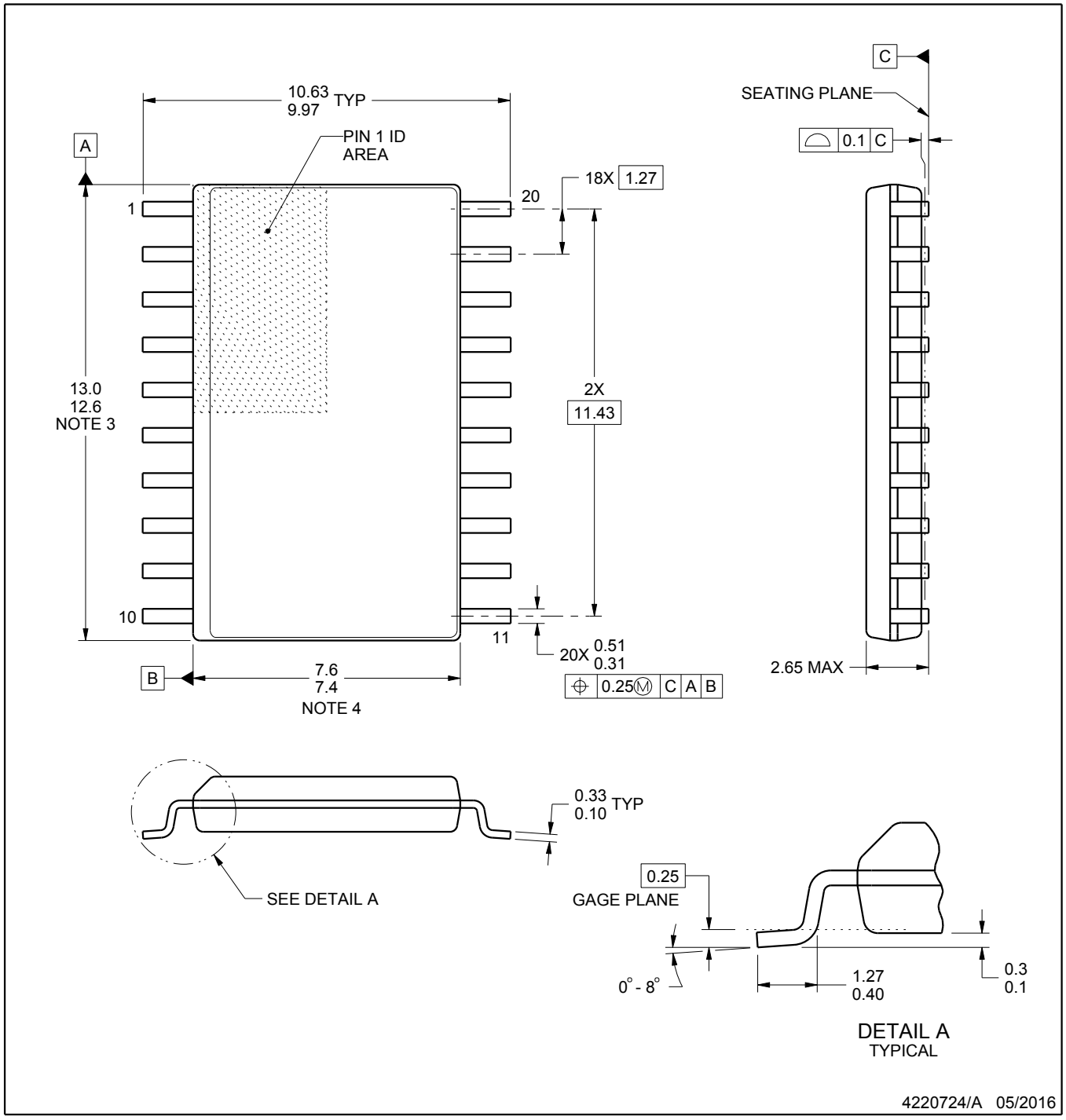

NOTES:

1. All linear dimensions are in millimeters. Dimensions in parenthesis are for reference only. Dimensioning and tolerancing per ASME Y14.5M.
2. This drawing is subject to change without notice.
3. This dimension does not include mold flash, protrusions, or gate burrs. Mold flash, protrusions, or gate burrs shall not exceed 0.15 mm per side.
4. This dimension does not include interlead flash. Interlead flash shall not exceed 0.43 mm per side.
5. Reference JEDEC registration MS-013.

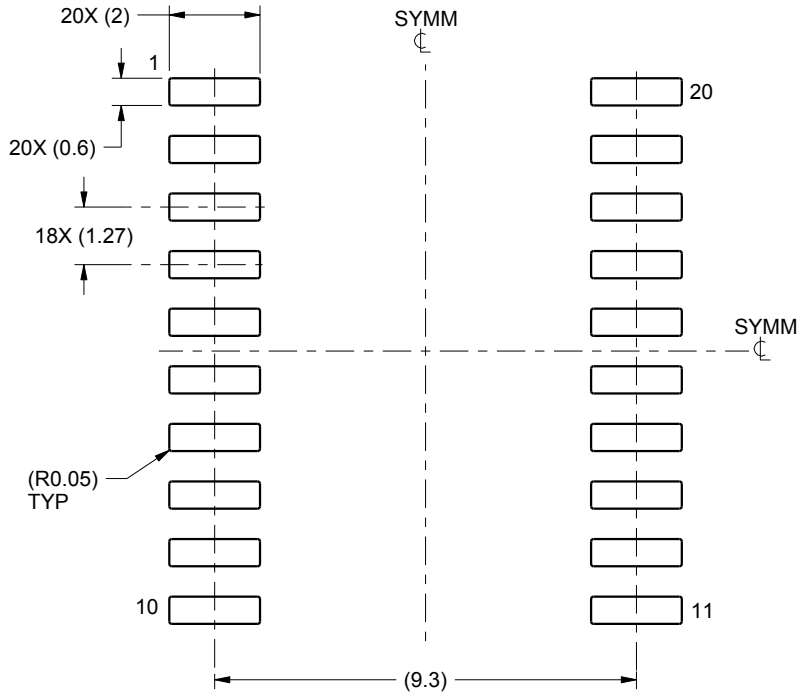

LAND PATTERN EXAMPLE
SCALE:6X

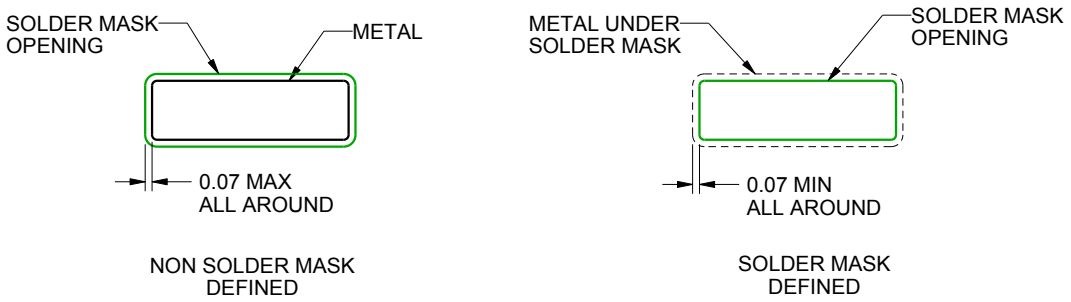

SOLDER MASK DETAILS

4220724/A 05/2016

NOTES: (continued)

6. Publication IPC-7351 may have alternate designs.
7. Solder mask tolerances between and around signal pads can vary based on board fabrication site.

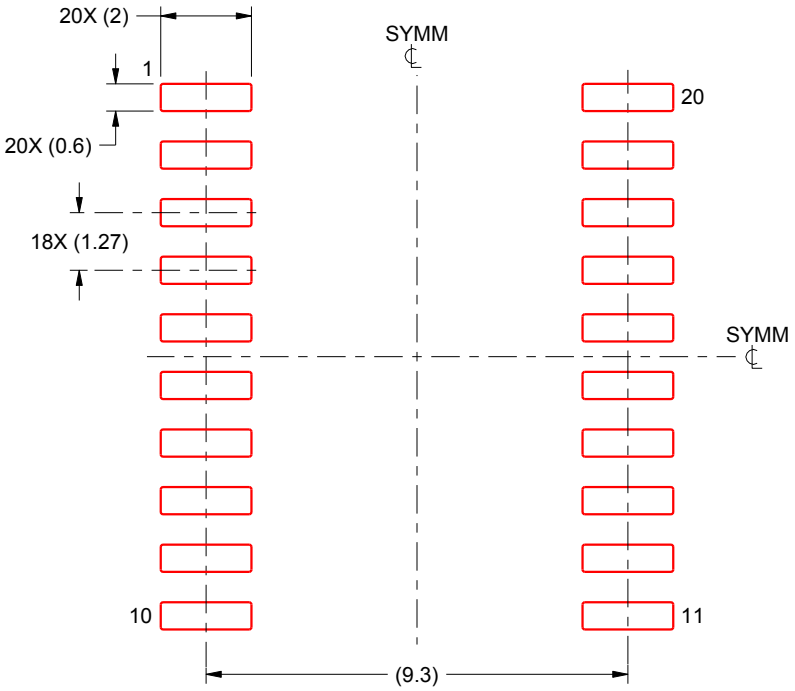

SOLDER PASTE EXAMPLE
BASED ON 0.125 mm THICK STENCIL
SCALE:6X

4220724/A 05/2016

NOTES: (continued)

8. Laser cutting apertures with trapezoidal walls and rounded corners may offer better paste release. IPC-7525 may have alternate design recommendations.
9. Board assembly site may have different recommendations for stencil design.

IMPORTANT NOTICE AND DISCLAIMER

TI PROVIDES TECHNICAL AND RELIABILITY DATA (INCLUDING DATA SHEETS), DESIGN RESOURCES (INCLUDING REFERENCE DESIGNS), APPLICATION OR OTHER DESIGN ADVICE, WEB TOOLS, SAFETY INFORMATION, AND OTHER RESOURCES “AS IS” AND WITH ALL FAULTS, AND DISCLAIMS ALL WARRANTIES, EXPRESS AND IMPLIED, INCLUDING WITHOUT LIMITATION ANY IMPLIED WARRANTIES OF MERCHANTABILITY, FITNESS FOR A PARTICULAR PURPOSE OR NON-INFRINGEMENT OF THIRD PARTY INTELLECTUAL PROPERTY RIGHTS.

These resources are intended for skilled developers designing with TI products. You are solely responsible for (1) selecting the appropriate TI products for your application, (2) designing, validating and testing your application, and (3) ensuring your application meets applicable standards, and any other safety, security, regulatory or other requirements.

These resources are subject to change without notice. TI grants you permission to use these resources only for development of an application that uses the TI products described in the resource. Other reproduction and display of these resources is prohibited. No license is granted to any other TI intellectual property right or to any third party intellectual property right. TI disclaims responsibility for, and you will fully indemnify TI and its representatives against, any claims, damages, costs, losses, and liabilities arising out of your use of these resources.

TI’s products are provided subject to TI’s Terms of Sale or other applicable terms available either on ti.com or provided in conjunction with such TI products. TI’s provision of these resources does not expand or otherwise alter TI’s applicable warranties or warranty disclaimers for TI products.

TI objects to and rejects any additional or different terms you may have proposed.

Mailing Address: Texas Instruments, Post Office Box 655303, Dallas, Texas 75265
Copyright © 2025, Texas Instruments Incorporated