SN74LV138A 3-Line to 8-Line Decoders or Demultiplexers

1 Features

- V_{CC} operation of 2 V to 5.5 V
- Maximum t_{pd} of 9.5 ns at 5 V
- Typical V_{OLP} (output ground bounce) <0.8 V at V_{CC} = 3.3 V, T_A = 25°C
- Typical V_{OHV} (output V_{OH} undershoot) >2.3 V at V_{CC} = 3.3 V, T_A = 25°C
- Support mixed-mode voltage operation on all ports
- I_{off} supports partial-power-down mode operation
- Latch-up performance exceeds 250 mA per JESD 17

2 Applications

- Output expansion
- LED matrix control
- 7-segment display control
- 8-bit data storage

3 Description

The SN74LV138A device is 3-line to 8-line decoders/demultiplexers designed for 2 V to 5.5 V V_{CC} operation.

The conditions at the binary-select inputs (A_0, A_1, A_2) and the three enable inputs (G2, $\overline{G0}$, $\overline{G1}$) select one of eight output lines. The two active-low ($\overline{G0}$, $\overline{G1}$) and one active-high (G2) enable inputs reduce the need for external gates or inverters when expanding.

Package Information

PART NUMBER	PACKAGE(1)	BODY SIZE
SN74LV138A	D (SOIC, 16)	9.90 mm × 3.91 mm
	DB (SSOP, 16)	6.20 mm × 5.30 mm
	DGV (TVSOP, 16)	3.60 mm × 4.40 mm
	NSA (BGA, 16)	2.00 mm × 2.00 mm
	PW (TSSOP, 16)	5.00 mm × 4.40 mm
	RGY (VQFN, 16)	4.00 mm × 3.50 mm
	BQB (WQFN, 16)	3.60 mm × 2.60 mm

(1) For all available packages, see the orderable addendum at the end of the data sheet.

An IMPORTANT NOTICE at the end of this data sheet addresses availability, warranty, changes, use in safety-critical applications, intellectual property matters and other important disclaimers. UNLESS OTHERWISE NOTED, this document contains PRODUCTION DATA.

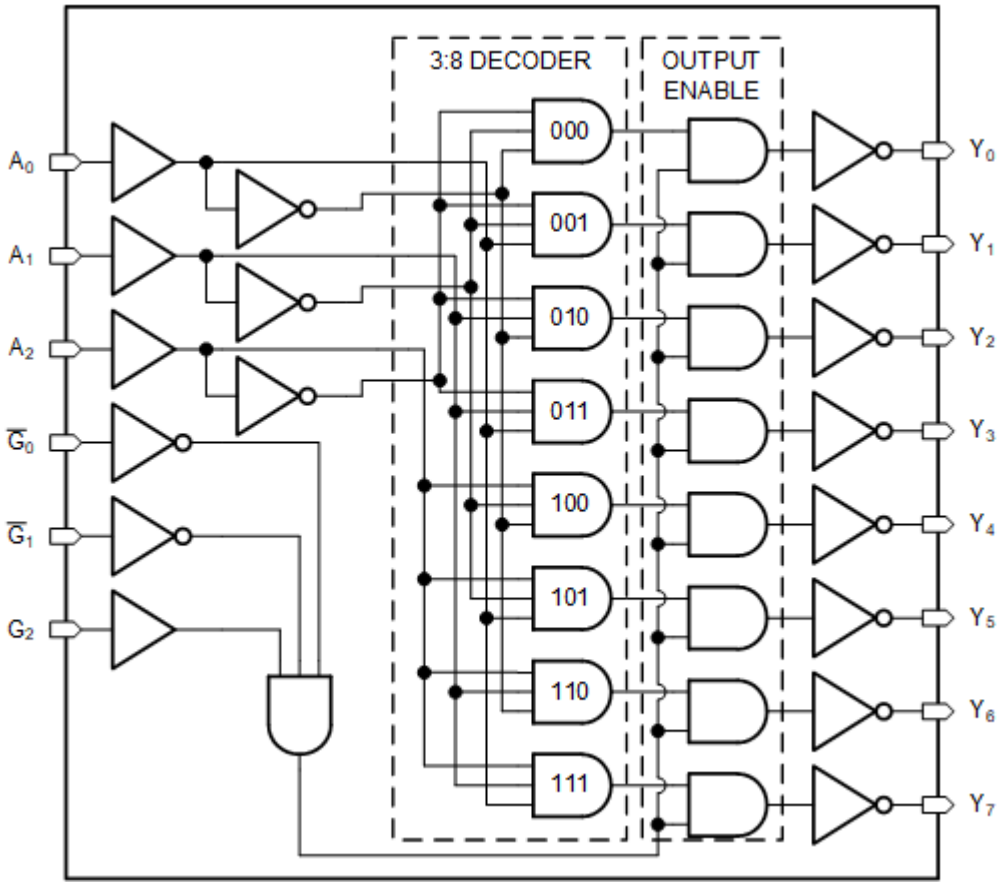

Logic Diagram (Positive Logic)

Copyright © 2023 Texas Instruments Incorporated

Table of Contents

1 Features....1
2 Applications....1
3 Description....1
4 Revision History....3
5 Pin Configuration and Functions....4
6 Specifications....5
6.1 Absolute Maximum Ratings....5
6.2 ESD Ratings....5
6.3 Recommended Operating Conditions[(1)]....6
6.4 Thermal Information....6
6.5 Electrical Characteristics....6
6.6 Switching Characteristics, V_{CC} = 2.5 V ± 0.25 V....7
6.7 Switching Characteristics, V_{CC} = 3.3 V ± 0.3 V....7
6.8 Switching Characteristics, V_{CC} = 5 V ± 0.5 V....7
6.9 Operating Characteristics....8
6.10 Typical Characteristics....8
7 Parameter Measurement Information....9
8 Detailed Description....10
8.1 Overview....10
8.2 Functional Block Diagram....10
8.3 Feature Description....10
8.4 Device Functional Modes....11
9 Application and Implementation....13
9.1 Application Information....13
9.2 Typical Application....13
9.3 Power Supply Recommendations....16
9.4 Layout....16
10 Device and Documentation Support....17
10.1 Documentation Support....17
10.2 Receiving Notification of Documentation Updates....17
10.3 Support Resources....17
10.4 Trademarks....17
10.5 Electrostatic Discharge Caution....17
10.6 Glossary....17
11 Mechanical, Packaging, and Orderable Information....17

4 Revision History

Changes from Revision M (December 2022) to Revision N (March 2023)	Page
• Updated the structural layout of document to current standard	1

Changes from Revision L (August 2005) to Revision M (December 2022)	Page
• Updated the numbering, formatting, tables, figures and cross-references throughout the document to reflect modern datasheet standards	1
• Added the *Applications* section	1
• Added the *Device Information* table and removed the *Ordering Information* table	1

5 Pin Configuration and Functions

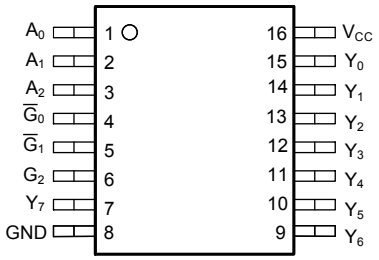

Figure 5-1. D, DB, DGV, NS and PW Package 16-Pin (Top View)

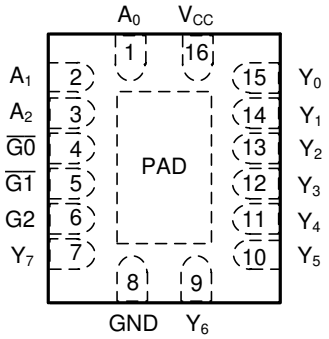

Figure 5-2. RGY and BQB Package 16-Pin (Top View)

Table 5-1. Pin Functions

PIN		TYPE[1]	DESCRIPTION
NAME	NO.		
A_0	1	I	Address select 0
A_1	2	I	Address select 1
A_2	3	I	Address select 2
G2	6	I	Strobe input
$\overline{G0}$	4	I	Strobe input, active low
$\overline{G1}$	5	I	Strobe input, active low
GND	8	G	Ground
V_{CC}	16	P	Positive supply
Y_0	15	O	Output 0
Y_1	14	O	Output 1
Y_2	13	O	Output 2
Y_3	12	O	Output 3
Y_4	11	O	Output 4
Y_5	10	O	Output 5
Y_6	9	O	Output 6
Y_7	7	O	Output 7
Thermal Pad		-	Thermal Pad[2]

(1) Signal Types: I = Input, O = Output, I/O = Input or Output, G = Ground, P = Power
(2) BQB and RGY package only

Copyright © 2023 Texas Instruments Incorporated

6 Specifications

6.1 Absolute Maximum Ratings

over operating free-air temperature range (unless otherwise noted) [1]

			MIN	MAX	UNIT
V_{CC}	Supply voltage range		–0.5	7	V
V_I	Input voltage range[2]		–0.5	7	V
V_O	Voltage range applied to any output in the high-impedance or power-off state[2]		–0.5	7	V
V_O	Output voltage range[2] [3]		–0.5	V_{CC} + 0.5	V
I_{IK}	Input clamp current	$V_I < 0$		–20	mA
I_{OK}	Output clamp current	$V_O < 0$		–50	mA
I_O	Continuous output current	V_O = 0 to V_{CC}		±25	mA
	Continuous current through V_{CC} or GND			±50	mA
T_{stg}	Storage temperature range		–65	150	°C

(1) Operation outside the *Absolute Maximum Ratings* may cause permanent device damage. Absolute maximum ratings do not imply functional operation of the device at these or any other conditions beyond those listed under *Recommended Operating Conditions*. If briefly operating outside the *Recommended Operating Conditions* but within the *Absolute Maximum Ratings*, the device may not sustain damage, but it may not be fully functional. Operating the device in this manner may affect device reliability, functionality, performance, and shorten the device lifetime.
(2) The input and output negative-voltage ratings may be exceeded if the input and output current ratings are observed.
(3) This value is limited to 5.5 V maximum.

6.2 ESD Ratings

			VALUE	UNIT
$V_{(ESD)}$	Electrostatic discharge	Human-body model (HBM), per ANSI/ESDA/JEDEC JS-001[1]	±2000	V
		Charged-device model (CDM), per ANSI/ESDA/JEDEC JS-002[2]	±1000	

(1) JEDEC document JEP155 states that 500-V HBM allows safe manufacturing with a standard ESD control process.
(2) JEDEC document JEP157 states that 250-V CDM allows safe manufacturing with a standard ESD control process.

6.3 Recommended Operating Conditions[1]

			SN74LV138A		UNIT
			MIN	MAX	
V_{CC}	Supply voltage		2	5.5	V
V_{IH}	High-level input voltage	V_{CC} = 2 V	1.5		V
		V_{CC} = 2.3 V to 2.7 V	V_{CC} × 0.7		
		V_{CC} = 3 V to 3.6 V	V_{CC} × 0.7		
		V_{CC} = 4.5 V to 5.5 V	V_{CC} × 0.7		
V_{IL}	Low-level input voltage	V_{CC} = 2 V		0.5	V
		V_{CC} = 2.3 V to 2.7 V		V_{CC} × 0.3	
		V_{CC} = 3 V to 3.6 V		V_{CC} × 0.3	
		V_{CC} = 4.5 V to 5.5 V		V_{CC} × 0.3	
V_I	Input voltage		0	5.5	V
V_O	Output voltage		0	V_{CC}	V
I_{OH}	High-level output current	V_{CC} = 2 V		–50	µA
		V_{CC} = 2.3 V to 2.7 V		–2	mA
		V_{CC} = 3 V to 3.6 V		–6	
		V_{CC} = 4.5 V to 5.5 V		–12	
I_{OL}	Low-level output current	V_{CC} = 2 V		50	µA
		V_{CC} = 2.3 V to 2.7 V		2	mA
		V_{CC} = 3 V to 3.6 V		6	
		V_{CC} = 4.5 V to 5.5 V		12	
Δt/Δv	Input transition rise or fall rate	V_{CC} = 2.3 V to 2.7 V		200	ns/V
		V_{CC} = 3 V to 3.6 V		100	
		V_{CC} = 4.5 V to 5.5 V		20	
T_A	Operating free-air temperature		–40	85	°C

(1) All unused inputs of the device must be held at V_{CC} or GND to ensure proper device operation. Refer to the TI application report, *Implications of Slow or Floating CMOS Inputs*.

6.4 Thermal Information

THERMAL METRIC[1]		SN74LV138A							UNIT
		D	DB	DGV	NS	PW	RGY	BQB	
		16 PINS							
$R_{\theta JA}$	Junction-to-ambient thermal resistance	73	82	120	64	108	39	86	°C/W

(1) For more information about traditional and new thermal metrics, see *IC Package Thermal Metrics*.

6.5 Electrical Characteristics

over recommended operating free-air temperature range (unless otherwise noted)

PARAMETER		TEST CONDITIONS	V_{CC}	SN74LV138A			UNIT
				MIN	TYP	MAX	
V_{OH}	High-Level Output Voltage	I_{OH} = –50 µA	2 V to 5.5 V	V_{CC} – 0.1			V
		I_{OH} = –2 mA	2.3 V	2			
		I_{OH} = –6 mA	3 V	2.48			
		I_{OH} = –12 mA	4.5 V	3.8			

Copyright © 2023 Texas Instruments Incorporated

over recommended operating free-air temperature range (unless otherwise noted)

PARAMETER		TEST CONDITIONS	V_{CC}	SN74LV138A			UNIT
				MIN	TYP	MAX	
V_{OL}	Low-Level Output Voltage	I_{OL} = 50 µA	2 V to 5.5 V			0.1	V
		I_{OL} = 2 mA	2.3 V			0.4	
		I_{OL} = 6 mA	3 V			0.44	
		I_{OL} = 12 mA	4.5 V			0.55	
I_I	Input Current	V_I = 5.5 V or GND	0 to 5.5 V			±1	µA
I_{CC}	Supply Current	$V_I = V_{CC}$ or GND, I_O = 0	5.5 V			20	µA
I_{off}	Input/Output Power-Off Leakage Current	V_I or V_O = 0 to 5.5 V	0			5	µA
C_i	Input Capacitance	$V_I = V_{CC}$ or GND	3.3 V		2.1		pF

6.6 Switching Characteristics, V_{CC} = 2.5 V ± 0.25 V

over recommended operating free-air temperature range (unless otherwise noted) (see Figure 7-1)

PARAMETER	FROM (INPUT)	TO (OUTPUT)	LOAD CAPACITANCE	T_A = 25°C			SN74LV138A		UNIT
				MIN	TYP	MAX	MIN	MAX	
t_{pd}	A_0, A_1, A_2	Y	C_L = 15 pF		11.7	17.6	1	21	ns
	G2				12.3	19.2	1	22	
	$\overline{G0}$ or $\overline{G1}$				11.4	18.2	1	21	
t_{pd}	A_0, A_1, A_2	Y	C_L = 50 pF		14.9	21.4	1	25	ns
	G2				15.7	22.6	1	26	
	$\overline{G0}$ or $\overline{G1}$				14.8	22	1	25	

6.7 Switching Characteristics, V_{CC} = 3.3 V ± 0.3 V

over recommended operating free-air temperature range (unless otherwise noted) (see Figure 7-1)

PARAMETER	FROM (INPUT)	TO (OUTPUT)	LOAD CAPACITANCE	T_A = 25°C			SN74LV138A		UNIT
				MIN	TYP	MAX	MIN	MAX	
t_{pd}	A_0, A_1, A_2	Y	C_L = 15 pF		8.1	11.4	1	13.5	ns
	G2				8.4	12.8	1	15	
	$\overline{G0}$ or $\overline{G1}$				7.8	11.4	1	13.5	
t_{pd}	A_0, A_1, A_2	Y	C_L = 50 pF		10.3	15.8	1	18	ns
	G2				10.6	16.3	1	18.5	
	$\overline{G0}$ or $\overline{G1}$				10	14.9	1	17	

6.8 Switching Characteristics, V_{CC} = 5 V ± 0.5 V

over recommended operating free-air temperature range (unless otherwise noted) (see Figure 7-1)

PARAMETER	FROM (INPUT)	TO (OUTPUT)	LOAD CAPACITANCE	T_A = 25°C			SN74LV138A		UNIT
				MIN	TYP	MAX	MIN	MAX	
t_{pd}	A_0, A_1, A_2	Y	C_L = 15 pF		5.6	8.1	1	9.5	ns
	G2				5.7	8.1	1	9.5	
	$\overline{G0}$ or $\overline{G1}$				5.4	8.1	1	9.5	
t_{pd}	A_0, A_1, A_2	Y	C_L = 50 pF		7	10.1	1	11.5	ns
	G2				7.1	10.1	1	11.5	
	$\overline{G0}$ or $\overline{G1}$				6.8	10.1	1	11.5	

Copyright © 2023 Texas Instruments Incorporated

6.9 Operating Characteristics

T_A = 25°C

PARAMETER		TEST CONDITIONS	V_{CC}	TYP	UNIT
C_{pd}	Power dissipation capacitance	C_L = 50 pF, f = 10 MHz	3.3 V	16.8	pF
			5 V	19.1	

6.10 Typical Characteristics

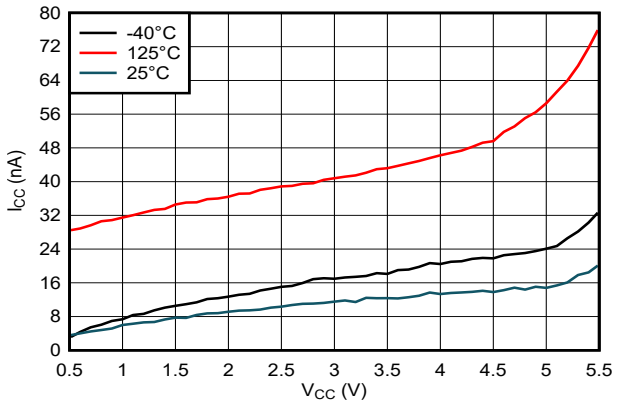

Figure 6-1. Supply Current (I_{CC}) vs Supply Voltage (V_{CC})

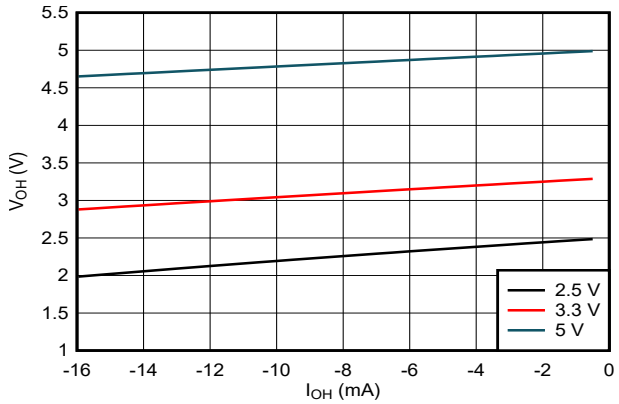

Figure 6-2. Output Voltage vs Current in HIGH State

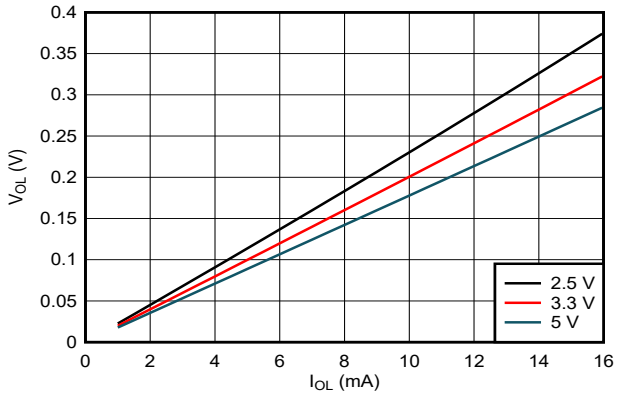

Figure 6-3. Output Voltage vs Current in LOW State

Copyright © 2023 Texas Instruments Incorporated

7 Parameter Measurement Information

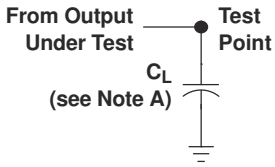

LOAD CIRCUIT FOR
TOTEM-POLE OUTPUTS

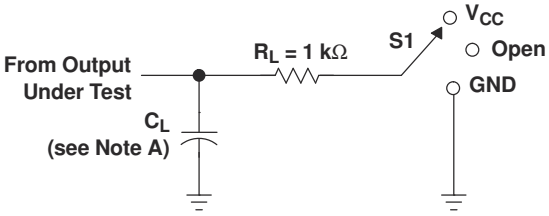

LOAD CIRCUIT FOR
3-STATE AND OPEN-DRAIN OUTPUTS

TEST	S1
t_{PLH}/t_{PHL}	Open
t_{PLZ}/t_{PZL}	V_{CC}
t_{PHZ}/t_{PZH}	GND
Open Drain	V_{CC}

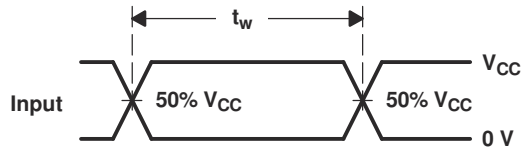

VOLTAGE WAVEFORMS
PULSE DURATION

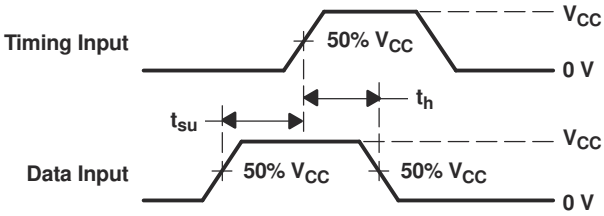

VOLTAGE WAVEFORMS
SETUP AND HOLD TIMES

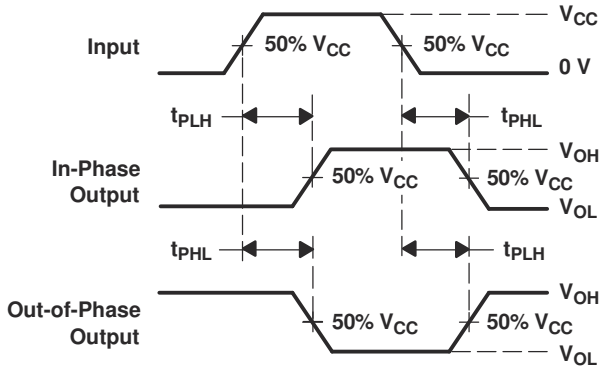

VOLTAGE WAVEFORMS
PROPAGATION DELAY TIMES
INVERTING AND NONINVERTING OUTPUTS

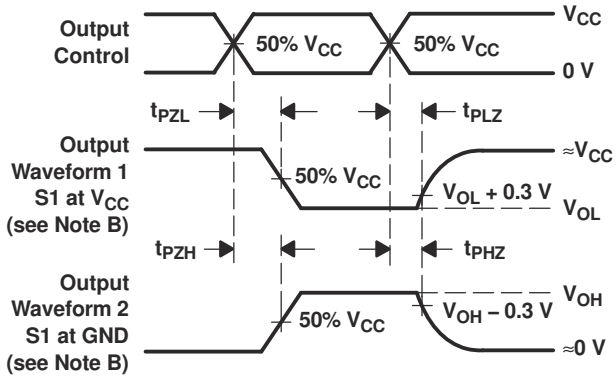

VOLTAGE WAVEFORMS
ENABLE AND DISABLE TIMES
LOW- AND HIGH-LEVEL ENABLING

NOTES:
A. C_L includes probe and jig capacitance.
B. Waveform 1 is for an output with internal conditions such that the output is low, except when disabled by the output control. Waveform 2 is for an output with internal conditions such that the output is high, except when disabled by the output control.
C. All input pulses are supplied by generators having the following characteristics: PRR ≤ 1 MHz, Z_O = 50 Ω, t_r ≤ 3 ns, t_f ≤ 3 ns.
D. The outputs are measured one at a time, with one input transition per measurement.
E. t_{PLZ} and t_{PHZ} are the same as t_{dis}.
F. t_{PZL} and t_{PZH} are the same as t_{en}.
G. t_{PHL} and t_{PLH} are the same as t_{pd}.
H. All parameters and waveforms are not applicable to all devices.

Figure 7-1. Load Circuits and Voltage Waveforms

8 Detailed Description

8.1 Overview

The SN74LV138A devices are 3-line to 8-line decoders/demultiplexers designed for 2 V to 5.5 V V_{CC} operation.

These devices are designed for high-performance memory-decoding or data-routing applications requiring very short propagation delay times. In high-performance memory systems, these decoders can be used to minimize the effects of system decoding. When employed with high-speed memories utilizing a fast enable circuit, the delay times of these decoders and the enable time of the memory usually are less than the typical access time of the memory. This means that the effective system delay introduced by the decoder is negligible.

The conditions at the binary-select inputs (A_0, A_1, A_2) and the three enable inputs (G2, $\overline{G0}$, $\overline{G1}$) select one of eight output lines. The two active-low ($\overline{G0}$, $\overline{G1}$) and one active-high (G2) enable inputs reduce the need for external gates or inverters when expanding. A 24-line decoder can be implemented without external inverters and a 32-line decoder requires only one inverter. An enable input can be used as a data input for demultiplexing applications.

These devices are fully specified for partial-power-down applications using I_{off}. The I_{off} circuitry disables the outputs, preventing damaging current backflow through the devices when they are powered down.

8.2 Functional Block Diagram

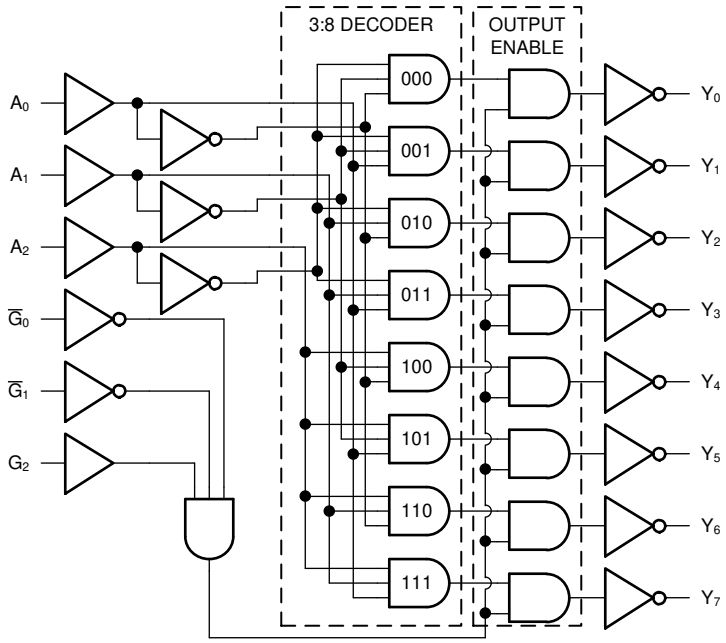

Figure 8-1. Logic Diagram (Positive Logic)

8.3 Feature Description

8.3.1 Standard CMOS Inputs

This device includes standard CMOS inputs. Standard CMOS inputs are high impedance and are typically modeled as a resistor in parallel with the input capacitance given in the *Electrical Characteristics*. The worst case resistance is calculated with the maximum input voltage, given in the *Absolute Maximum Ratings*, and the maximum input leakage current, given in the *Electrical Characteristics*, using Ohm's law (R = V ÷ I).

Standard CMOS inputs require that input signals transition between valid logic states quickly, as defined by the input transition time or rate in the *Recommended Operating Conditions* table. Failing to meet this specification will result in excessive power consumption and could cause oscillations. More details can be found in *Implications of Slow or Floating CMOS Inputs*.

Copyright © 2023 Texas Instruments Incorporated

Do not leave standard CMOS inputs floating at any time during operation. Unused inputs must be terminated at V_{CC} or GND. If a system will not be actively driving an input at all times, then a pull-up or pull-down resistor can be added to provide a valid input voltage during these times. The resistor value will depend on multiple factors; a 10-kΩ resistor, however, is recommended and will typically meet all requirements.

8.3.2 Balanced CMOS Push-Pull Outputs

This device includes balanced CMOS push-pull outputs. The term *balanced* indicates that the device can sink and source similar currents. The drive capability of this device may create fast edges into light loads, so routing and load conditions should be considered to prevent ringing. Additionally, the outputs of this device are capable of driving larger currents than the device can sustain without being damaged. It is important for the output power of the device to be limited to avoid damage due to overcurrent. The electrical and thermal limits defined in the *Absolute Maximum Ratings* must be followed at all times.

Unused push-pull CMOS outputs should be left disconnected.

8.3.3 Partial Power Down (I_{off})

This device includes circuitry to disable all outputs when the supply pin is held at 0 V. When disabled, the outputs will neither source nor sink current, regardless of the input voltages applied. The amount of leakage current at each output is defined by the I_{off} specification in the *Electrical Characteristics* table.

8.3.4 Clamp Diode Structure

Figure 8-2 shows the inputs and outputs to this device have negative clamping diodes only.

CAUTION

Voltages beyond the values specified in the *Absolute Maximum Ratings* table can cause damage to the device. The input and output voltage ratings may be exceeded if the input and output clamp-current ratings are observed.

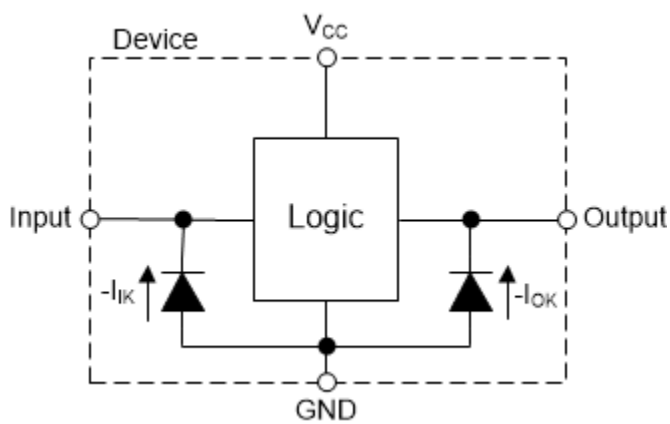

Figure 8-2. Electrical Placement of Clamping Diodes for Each Input and Output

8.4 Device Functional Modes

Function Table

ENABLE INPUTS[1]			SELECT INPUTS			OUTPUTS[2]							
G2	$\overline{G0}$	$\overline{G1}$	A_2	A_1	A_0	Y0	Y1	Y20	Y3	Y4	Y5	Y6	Y7
X	H	X	X	X	X	H	H	H	H	H	H	H	H
X	X	H	X	X	X	H	H	H	H	H	H	H	H
L	X	X	X	X	X	H	H	H	H	H	H	H	H
H	L	L	L	L	L	L	H	H	H	H	H	H	H
H	L	L	L	L	H	H	L	H	H	H	H	H	H
H	L	L	L	H	L	H	H	L	H	H	H	H	H

Function Table (continued)

ENABLE INPUTS[1]			SELECT INPUTS			OUTPUTS[2]							
G2	$\overline{G0}$	$\overline{G1}$	A_2	A_1	A_0	Y0	Y1	Y20	Y3	Y4	Y5	Y6	Y7
H	L	L	L	H	H	H	H	H	L	H	H	H	H
H	L	L	H	L	L	H	H	H	H	L	H	H	H
H	L	L	H	L	H	H	H	H	H	H	L	H	H
H	L	L	H	H	L	H	H	H	H	H	H	L	H
H	L	L	H	H	H	H	H	H	H	H	H	H	L

(1) H = High Voltage Level, L = Low Voltage Level, X = Don't Care
(2) H = Driving High, L = Driving Low, Z = High Impedance State

Copyright © 2023 Texas Instruments Incorporated

9 Application and Implementation

Note

Information in the following applications sections is not part of the TI component specification, and TI does not warrant its accuracy or completeness. TI's customers are responsible for determining suitability of components for their purposes, as well as validating and testing their design implementation to confirm system functionality.

9.1 Application Information

The SN74LV138A is a low drive CMOS device that can be used for a multitude of output expansion applications where output ringing is a concern. The low-drive and slow-edge rates minimize overshoot and undershoot on the outputs.

9.2 Typical Application

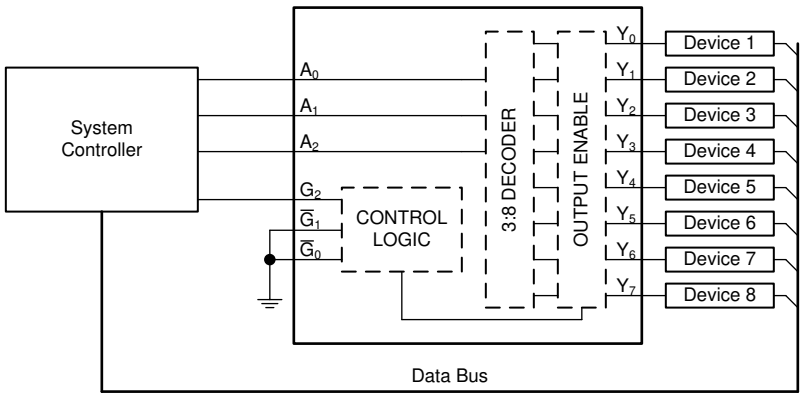

Figure 9-1. Output Exapnsion with Multiplexer

9.2.1 Power Considerations

Ensure the desired supply voltage is within the range specified in the *Recommended Operating Conditions*. The supply voltage sets the device's electrical characteristics as described in the *Electrical Characteristics* section.

The positive voltage supply must be capable of sourcing current equal to the total current to be sourced by all outputs of the SN74LV138A plus the maximum static supply current, I_{CC}, listed in the *Electrical Characteristics*, and any transient current required for switching. The logic device can only source as much current that is provided by the positive supply source. Be sure to not exceed the maximum total current through V_{CC} listed in the *Absolute Maximum Ratings*.

The ground must be capable of sinking current equal to the total current to be sunk by all outputs of the SN74LV138A plus the maximum supply current, I_{CC}, listed in the *Electrical Characteristics*, and any transient current required for switching. The logic device can only sink as much current that can be sunk into its ground connection. Be sure to not exceed the maximum total current through GND listed in the *Absolute Maximum Ratings*.

The SN74LV138A can drive a load with a total capacitance less than or equal to 50 pF while still meeting all of the data sheet specifications. Larger capacitive loads can be applied; however, it is not recommended to exceed 50 pF.

The SN74LV138A can drive a load with total resistance described by $R_L \geq V_O / I_O$, with the output voltage and current defined in the *Electrical Characteristics* table with V_{OH} and V_{OL}. When outputting in the HIGH state, the output voltage in the equation is defined as the difference between the measured output voltage and the supply voltage at the V_{CC} pin.

Total power consumption can be calculated using the information provided in *CMOS Power Consumption and Cpd Calculation*.

Copyright © 2023 Texas Instruments Incorporated

Thermal increase can be calculated using the information provided in *Thermal Characteristics of Standard Linear and Logic (SLL) Packages and Devices*.

CAUTION

The maximum junction temperature, $T_{J(max)}$ listed in the *Absolute Maximum Ratings*, is an additional limitation to prevent damage to the device. Do not violate any values listed in the *Absolute Maximum Ratings*. These limits are provided to prevent damage to the device.

9.2.2 Input Considerations

Input signals must cross $V_{IL(max)}$ to be considered a logic LOW, and $V_{IH(min)}$ to be considered a logic HIGH. Do not exceed the maximum input voltage range found in the *Absolute Maximum Ratings*.

Unused inputs must be terminated to either V_{CC} or ground. The unused inputs can be directly terminated if the input is completely unused, or they can be connected with a pull-up or pull-down resistor if the input will be used sometimes, but not always. A pull-up resistor is used for a default state of HIGH, and a pull-down resistor is used for a default state of LOW. The drive current of the controller, leakage current into the SN74LV138A (as specified in the *Electrical Characteristics*), and the desired input transition rate limits the resistor size. A 10-kΩ resistor value is often used due to these factors.

The SN74LV138A has CMOS inputs and thus requires fast input transitions to operate correctly, as defined in the *Recommended Operating Conditions* table. Slow input transitions can cause oscillations, additional power consumption, and reduction in device reliability.

Refer to the *Feature Description* section for additional information regarding the inputs for this device.

9.2.3 Output Considerations

The positive supply voltage is used to produce the output HIGH voltage. Drawing current from the output will decrease the output voltage as specified by the V_{OH} specification in the *Electrical Characteristics*. The ground voltage is used to produce the output LOW voltage. Sinking current into the output will increase the output voltage as specified by the V_{OL} specification in the *Electrical Characteristics*.

Push-pull outputs that could be in opposite states, even for a very short time period, should never be connected directly together. This can cause excessive current and damage to the device.

Two channels within the same device with the same input signals can be connected in parallel for additional output drive strength.

Unused outputs can be left floating. Do not connect outputs directly to V_{CC} or ground.

Refer to the *Feature Description* section for additional information regarding the outputs for this device.

Copyright © 2023 Texas Instruments Incorporated

9.2.4 Detailed Design Procedure

1. Add a decoupling capacitor from V_{CC} to GND. The capacitor needs to be placed physically close to the device and electrically close to both the V_{CC} and GND pins. An example layout is shown in the *Layout* section.
2. Ensure the capacitive load at the output is ≤ 50 pF. This is not a hard limit; it will, however, ensure optimal performance. This can be accomplished by providing short, appropriately sized traces from the SN74LV138A to one or more of the receiving devices.
3. Ensure the resistive load at the output is larger than (V_{CC} / $I_{O(max)}$) Ω. This will ensure that the maximum output current from the *Absolute Maximum Ratings* is not violated. Most CMOS inputs have a resistive load measured in MΩ; much larger than the minimum calculated previously.
4. Thermal issues are rarely a concern for logic gates; the power consumption and thermal increase, however, can be calculated using the steps provided in the application report, *CMOS Power Consumption and Cpd Calculation*.

9.2.5 Application Curves

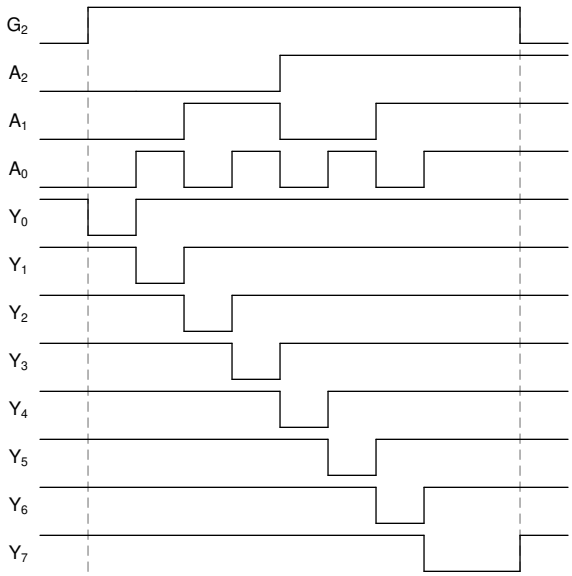

Figure 9-2. Application Timing Diagram

9.3 Power Supply Recommendations

The power supply can be any voltage between the minimum and maximum supply voltage rating located in the *Absolute Maximum Ratings* section. Each V_{CC} terminal must have a good bypass capacitor to prevent power disturbance. For devices with a single supply, TI recommends a 0.1-μF capacitor; if there are multiple V_{CC} terminals, then TI recommends a 0.01-μF or 0.022-μF capacitor for each power terminal. Multiple bypass capacitors can be paralleled to reject different frequencies of noise. Frequencies of 0.1 μF and 1 μF are commonly used in parallel. The bypass capacitor must be installed as close as possible to the power terminal for best results.

9.4 Layout

9.4.1 Layout Guidelines

When using multiple bit logic devices, inputs should not float. In many cases, functions or parts of functions of digital logic devices are unused. Some examples are when only two inputs of a triple-input AND gate are used, or when only 3 of the 4-buffer gates are used. Such unused input pins must not be left unconnected because the undefined voltages at the outside connections result in undefined operational states. All unused inputs of digital logic devices must be connected to a logic high or logic low voltage, as defined by the input voltage specifications, to prevent them from floating. The logic level that must be applied to any particular unused input depends on the function of the device. Generally, the inputs are tied to GND or V_{CC}, whichever makes more sense for the logic function or is more convenient.

9.4.2 Layout Example

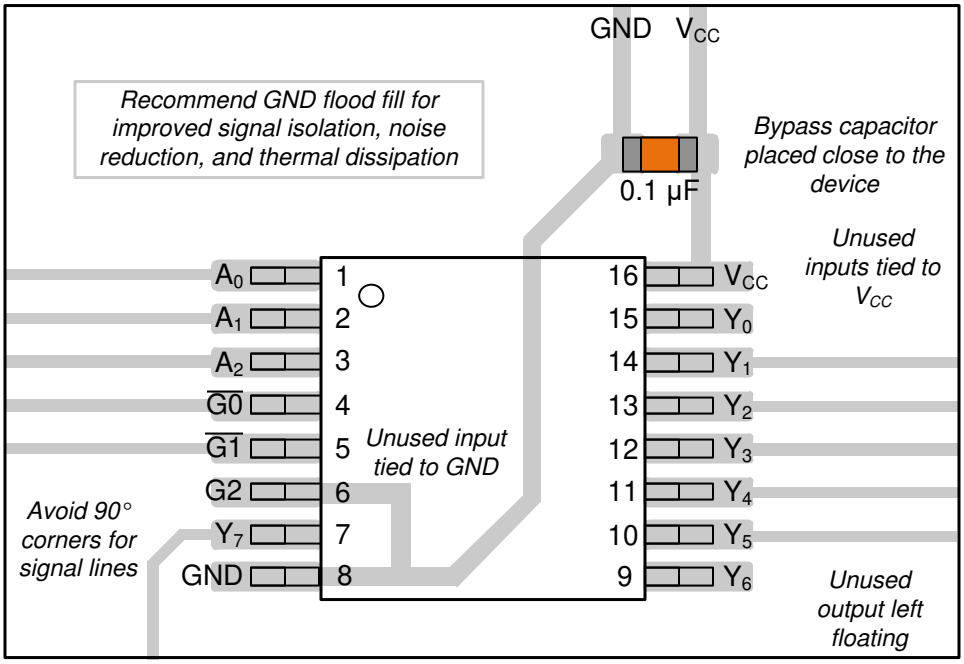

Figure 9-3. Layout Example for the SN74LV138A

Copyright © 2023 Texas Instruments Incorporated

10 Device and Documentation Support

TI offers an extensive line of development tools. Tools and software to evaluate the performance of the device, generate code, and develop solutions are listed below.

10.1 Documentation Support

10.1.1 Related Documentation

For related documentation, see the following:

- Texas Instruments, *CMOS Power Consumption and Cpd Calculation* application report
- Texas Instruments, *Thermal Characteristics of Standard Linear and Logic (SLL) Packages and Devices* application report

10.2 Receiving Notification of Documentation Updates

To receive notification of documentation updates, navigate to the device product folder on ti.com. Click on *Subscribe to updates* to register and receive a weekly digest of any product information that has changed. For change details, review the revision history included in any revised document.

10.3 Support Resources

TI E2E™ support forums are an engineer's go-to source for fast, verified answers and design help — straight from the experts. Search existing answers or ask your own question to get the quick design help you need.

Linked content is provided "AS IS" by the respective contributors. They do not constitute TI specifications and do not necessarily reflect TI's views; see TI's Terms of Use.

10.4 Trademarks

TI E2E™ is a trademark of Texas Instruments.
All trademarks are the property of their respective owners.

10.5 Electrostatic Discharge Caution

This integrated circuit can be damaged by ESD. Texas Instruments recommends that all integrated circuits be handled with appropriate precautions. Failure to observe proper handling and installation procedures can cause damage.

ESD damage can range from subtle performance degradation to complete device failure. Precision integrated circuits may be more susceptible to damage because very small parametric changes could cause the device not to meet its published specifications.

10.6 Glossary

TI Glossary	This glossary lists and explains terms, acronyms, and definitions.

11 Mechanical, Packaging, and Orderable Information

The following pages include mechanical, packaging, and orderable information. This information is the most current data available for the designated devices. This data is subject to change without notice and revision of this document. For browser-based versions of this data sheet, refer to the left-hand navigation.

Copyright © 2023 Texas Instruments Incorporated

PACKAGING INFORMATION

Orderable part number	Status (1)	Material type (2)	Package | Pins	Package qty | Carrier	RoHS (3)	Lead finish/ Ball material (4)	MSL rating/ Peak reflow (5)	Op temp (°C)	Part marking (6)
SN74LV138ABQBR	Active	Production	WQFN (BQB) | 16	3000 | LARGE T&R	Yes	NIPDAU	Level-1-260C-UNLIM	-40 to 125	LV138A
SN74LV138ABQBR.A	Active	Production	WQFN (BQB) | 16	3000 | LARGE T&R	Yes	NIPDAU	Level-1-260C-UNLIM	-40 to 125	LV138A
SN74LV138AD	Obsolete	Production	SOIC (D) | 16	-	-	Call TI	Call TI	-40 to 85	LV138A
SN74LV138ADBR	Active	Production	SSOP (DB) | 16	2000 | LARGE T&R	Yes	NIPDAU	Level-1-260C-UNLIM	-40 to 85	LV138A
SN74LV138ADBR.A	Active	Production	SSOP (DB) | 16	2000 | LARGE T&R	Yes	NIPDAU	Level-1-260C-UNLIM	-40 to 85	LV138A
SN74LV138ADGVR	Active	Production	TVSOP (DGV) | 16	2000 | LARGE T&R	Yes	NIPDAU	Level-1-260C-UNLIM	-40 to 85	LV138A
SN74LV138ADGVR.A	Active	Production	TVSOP (DGV) | 16	2000 | LARGE T&R	Yes	NIPDAU	Level-1-260C-UNLIM	-40 to 85	LV138A
SN74LV138ADR	Active	Production	SOIC (D) | 16	2500 | LARGE T&R	Yes	NIPDAU	Level-1-260C-UNLIM	-40 to 85	LV138A
SN74LV138ADR.A	Active	Production	SOIC (D) | 16	2500 | LARGE T&R	Yes	NIPDAU	Level-1-260C-UNLIM	-40 to 85	LV138A
SN74LV138ANSR	Active	Production	SOP (NS) | 16	2000 | LARGE T&R	Yes	NIPDAU | NIPDAU	Level-1-260C-UNLIM	-40 to 85	74LV138A
SN74LV138ANSR.A	Active	Production	SOP (NS) | 16	2000 | LARGE T&R	Yes	NIPDAU	Level-1-260C-UNLIM	-40 to 85	74LV138A
SN74LV138APW	Obsolete	Production	TSSOP (PW) | 16	-	-	Call TI	Call TI	-40 to 85	LV138A
SN74LV138APWR	Active	Production	TSSOP (PW) | 16	2000 | LARGE T&R	Yes	NIPDAU | SN	Level-1-260C-UNLIM	-40 to 85	LV138A
SN74LV138APWR.A	Active	Production	TSSOP (PW) | 16	2000 | LARGE T&R	Yes	NIPDAU	Level-1-260C-UNLIM	-40 to 85	LV138A
SN74LV138APWRG4	Active	Production	TSSOP (PW) | 16	2000 | LARGE T&R	Yes	NIPDAU	Level-1-260C-UNLIM	-40 to 85	LV138A
SN74LV138APWRG4.A	Active	Production	TSSOP (PW) | 16	2000 | LARGE T&R	Yes	NIPDAU	Level-1-260C-UNLIM	-40 to 85	LV138A
SN74LV138APWT	Obsolete	Production	TSSOP (PW) | 16	-	-	Call TI	Call TI	-40 to 85	LV138A
SN74LV138ARGYR	Active	Production	VQFN (RGY) | 16	3000 | LARGE T&R	Yes	NIPDAU	Level-2-260C-1 YEAR	-40 to 85	LV138A
SN74LV138ARGYR.A	Active	Production	VQFN (RGY) | 16	3000 | LARGE T&R	Yes	NIPDAU	Level-2-260C-1 YEAR	-40 to 85	LV138A

(1) **Status:** For more details on status, see our product life cycle.

(2) **Material type:** When designated, preproduction parts are prototypes/experimental devices, and are not yet approved or released for full production. Testing and final process, including without limitation quality assurance, reliability performance testing, and/or process qualification, may not yet be complete, and this item is subject to further changes or possible discontinuation. If available for ordering, purchases will be subject to an additional waiver at checkout, and are intended for early internal evaluation purposes only. These items are sold without warranties of any kind.

(3) **RoHS values:** Yes, No, RoHS Exempt. See the TI RoHS Statement for additional information and value definition.

(4) **Lead finish/Ball material:** Parts may have multiple material finish options. Finish options are separated by a vertical ruled line. Lead finish/Ball material values may wrap to two lines if the finish value exceeds the maximum column width.

(5) **MSL rating/Peak reflow:** The moisture sensitivity level ratings and peak solder (reflow) temperatures. In the event that a part has multiple moisture sensitivity ratings, only the lowest level per JEDEC standards is shown. Refer to the shipping label for the actual reflow temperature that will be used to mount the part to the printed circuit board.

(6) **Part marking:** There may be an additional marking, which relates to the logo, the lot trace code information, or the environmental category of the part.

Multiple part markings will be inside parentheses. Only one part marking contained in parentheses and separated by a "~" will appear on a part. If a line is indented then it is a continuation of the previous line and the two combined represent the entire part marking for that device.

Important Information and Disclaimer: The information provided on this page represents TI's knowledge and belief as of the date that it is provided. TI bases its knowledge and belief on information provided by third parties, and makes no representation or warranty as to the accuracy of such information. Efforts are underway to better integrate information from third parties. TI has taken and continues to take reasonable steps to provide representative and accurate information but may not have conducted destructive testing or chemical analysis on incoming materials and chemicals. TI and TI suppliers consider certain information to be proprietary, and thus CAS numbers and other limited information may not be available for release.

In no event shall TI's liability arising out of such information exceed the total purchase price of the TI part(s) at issue in this document sold by TI to Customer on an annual basis.

OTHER QUALIFIED VERSIONS OF SN74LV138A :

- Automotive : SN74LV138A-Q1

NOTE: Qualified Version Definitions:

- Automotive - Q100 devices qualified for high-reliability automotive applications targeting zero defects

TAPE AND REEL INFORMATION

REEL DIMENSIONS

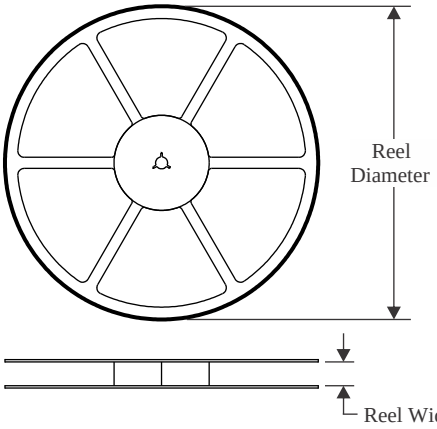

TAPE DIMENSIONS

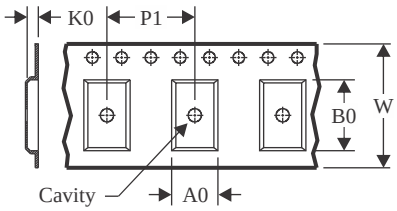

A0	Dimension designed to accommodate the component width
B0	Dimension designed to accommodate the component length
K0	Dimension designed to accommodate the component thickness
W	Overall width of the carrier tape
P1	Pitch between successive cavity centers

QUADRANT ASSIGNMENTS FOR PIN 1 ORIENTATION IN TAPE

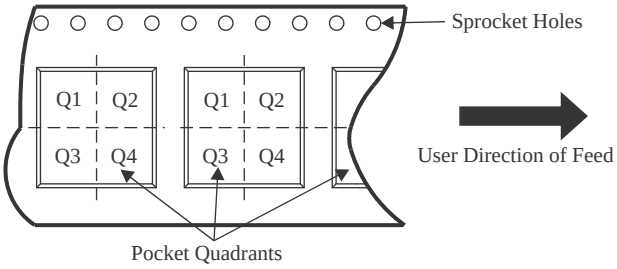

*All dimensions are nominal

Device	Package Type	Package Drawing	Pins	SPQ	Reel Diameter (mm)	Reel Width W1 (mm)	A0 (mm)	B0 (mm)	K0 (mm)	P1 (mm)	W (mm)	Pin1 Quadrant
SN74LV138ABQBR	WQFN	BQB	16	3000	180.0	12.4	2.8	3.8	1.2	4.0	12.0	Q1
SN74LV138ADBR	SSOP	DB	16	2000	330.0	16.4	8.35	6.6	2.4	12.0	16.0	Q1
SN74LV138ADGVR	TVSOP	DGV	16	2000	330.0	12.4	6.8	4.0	1.6	8.0	12.0	Q1
SN74LV138ADR	SOIC	D	16	2500	330.0	16.4	6.5	10.3	2.1	8.0	16.0	Q1
SN74LV138ANSR	SOP	NS	16	2000	330.0	16.4	8.2	10.5	2.5	12.0	16.0	Q1
SN74LV138APWR	TSSOP	PW	16	2000	330.0	12.4	6.9	5.6	1.6	8.0	12.0	Q1
SN74LV138APWRG4	TSSOP	PW	16	2000	330.0	12.4	6.9	5.6	1.6	8.0	12.0	Q1
SN74LV138APWRG4	TSSOP	PW	16	2000	330.0	12.4	6.9	5.6	1.6	8.0	12.0	Q1
SN74LV138ARGYR	VQFN	RGY	16	3000	330.0	12.4	3.8	4.3	1.5	8.0	12.0	Q1

TAPE AND REEL BOX DIMENSIONS

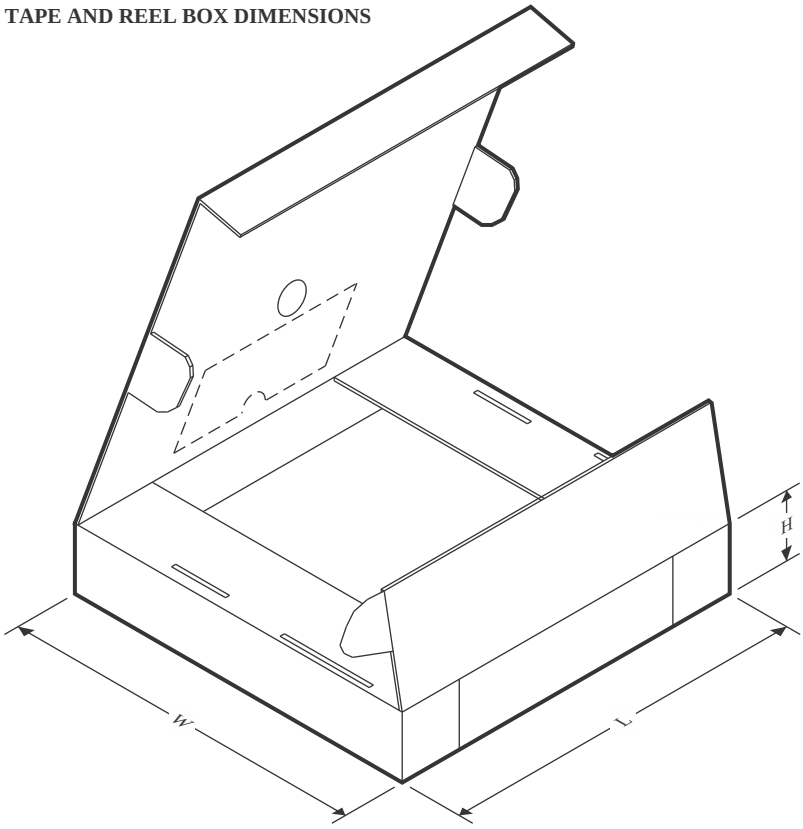

*All dimensions are nominal

Device	Package Type	Package Drawing	Pins	SPQ	Length (mm)	Width (mm)	Height (mm)
SN74LV138ABQBR	WQFN	BQB	16	3000	210.0	185.0	35.0
SN74LV138ADBR	SSOP	DB	16	2000	356.0	356.0	35.0
SN74LV138ADGVR	TVSOP	DGV	16	2000	356.0	356.0	35.0
SN74LV138ADR	SOIC	D	16	2500	356.0	356.0	35.0
SN74LV138ANSR	SOP	NS	16	2000	356.0	356.0	35.0
SN74LV138APWR	TSSOP	PW	16	2000	356.0	356.0	35.0
SN74LV138APWRG4	TSSOP	PW	16	2000	356.0	356.0	35.0
SN74LV138APWRG4	TSSOP	PW	16	2000	356.0	356.0	35.0
SN74LV138ARGYR	VQFN	RGY	16	3000	356.0	356.0	35.0

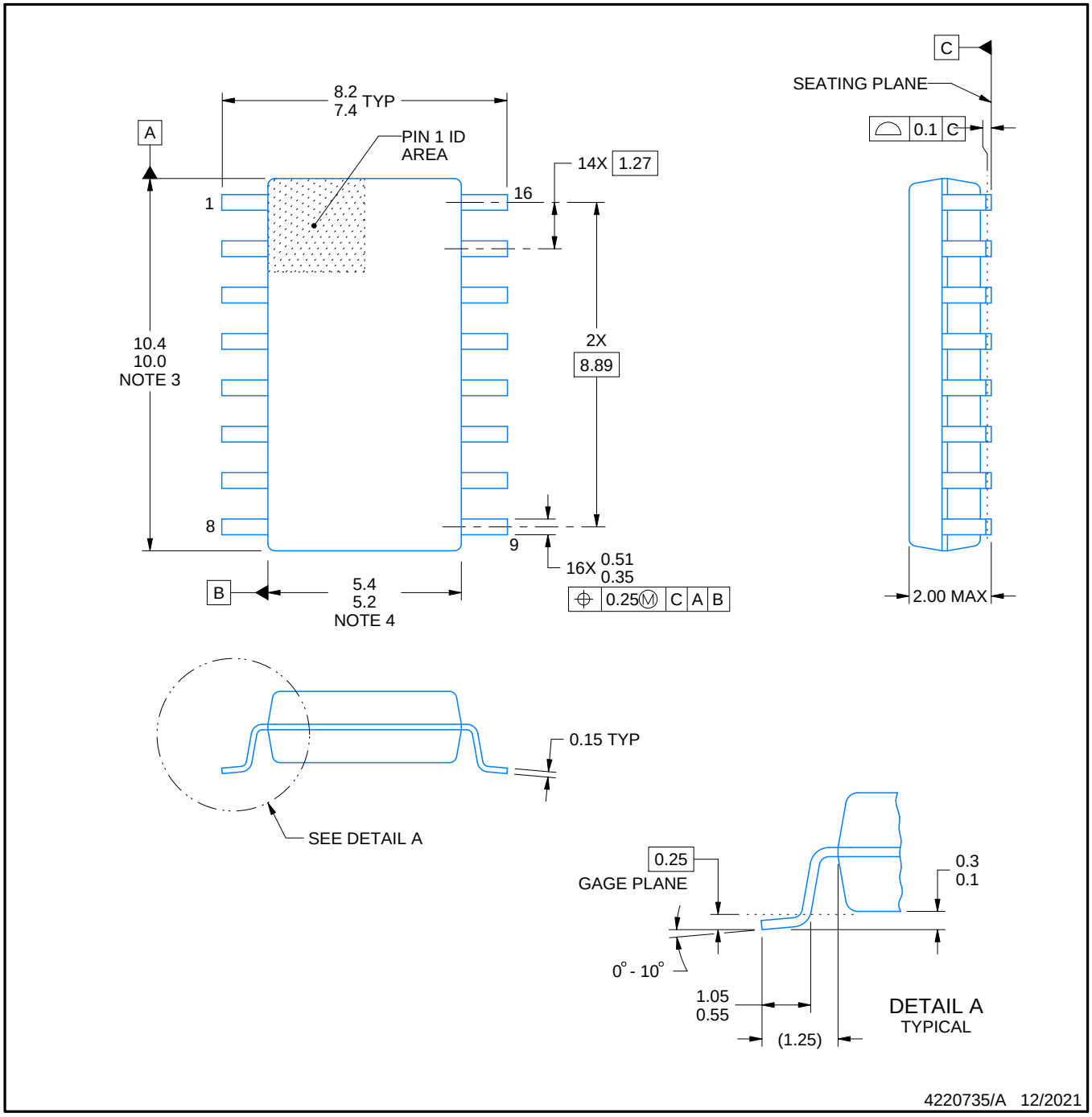

NOTES:

1. All linear dimensions are in millimeters. Dimensions in parenthesis are for reference only. Dimensioning and tolerancing per ASME Y14.5M.
2. This drawing is subject to change without notice.
3. This dimension does not include mold flash, protrusions, or gate burrs. Mold flash, protrusions, or gate burrs shall not exceed 0.15 mm, per side.
4. This dimension does not include interlead flash. Interlead flash shall not exceed 0.25 mm, per side.

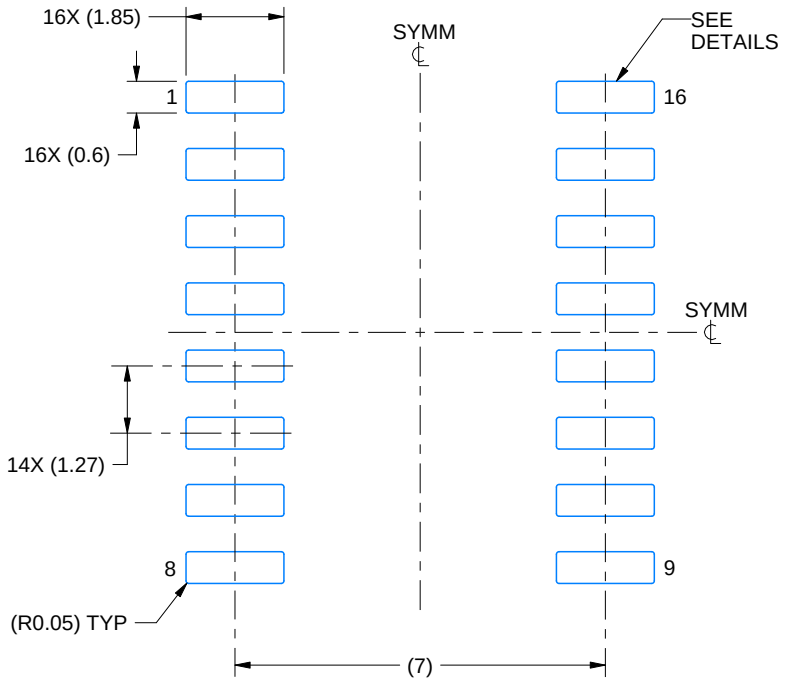

LAND PATTERN EXAMPLE
SCALE:7X

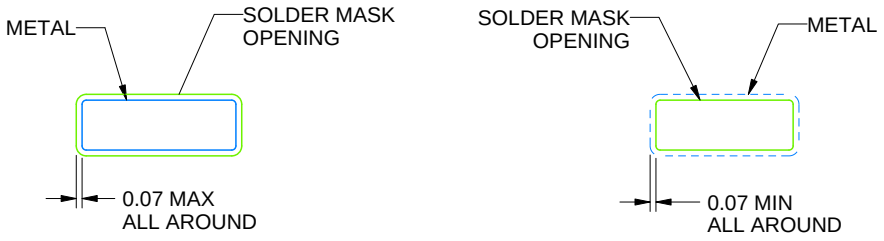

NON SOLDER MASK DEFINED

SOLDER MASK DEFINED

SOLDER MASK DETAILS

4220735/A 12/2021

NOTES: (continued)

5. Publication IPC-7351 may have alternate designs.
6. Solder mask tolerances between and around signal pads can vary based on board fabrication site.

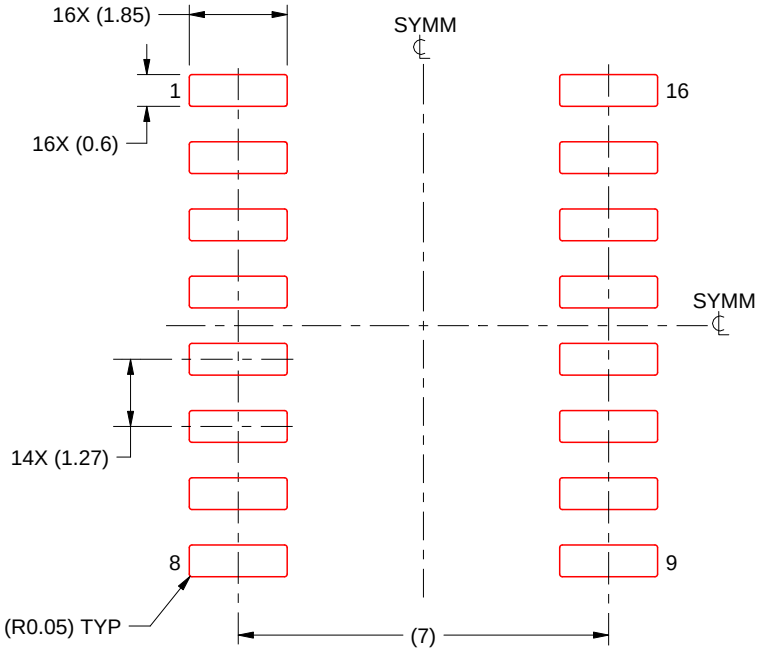

SOLDER PASTE EXAMPLE
BASED ON 0.125 mm THICK STENCIL
SCALE:7X

4220735/A 12/2021

NOTES: (continued)

7. Laser cutting apertures with trapezoidal walls and rounded corners may offer better paste release. IPC-7525 may have alternate design recommendations.
8. Board assembly site may have different recommendations for stencil design.

D (R–PDSO–G16) PLASTIC SMALL OUTLINE

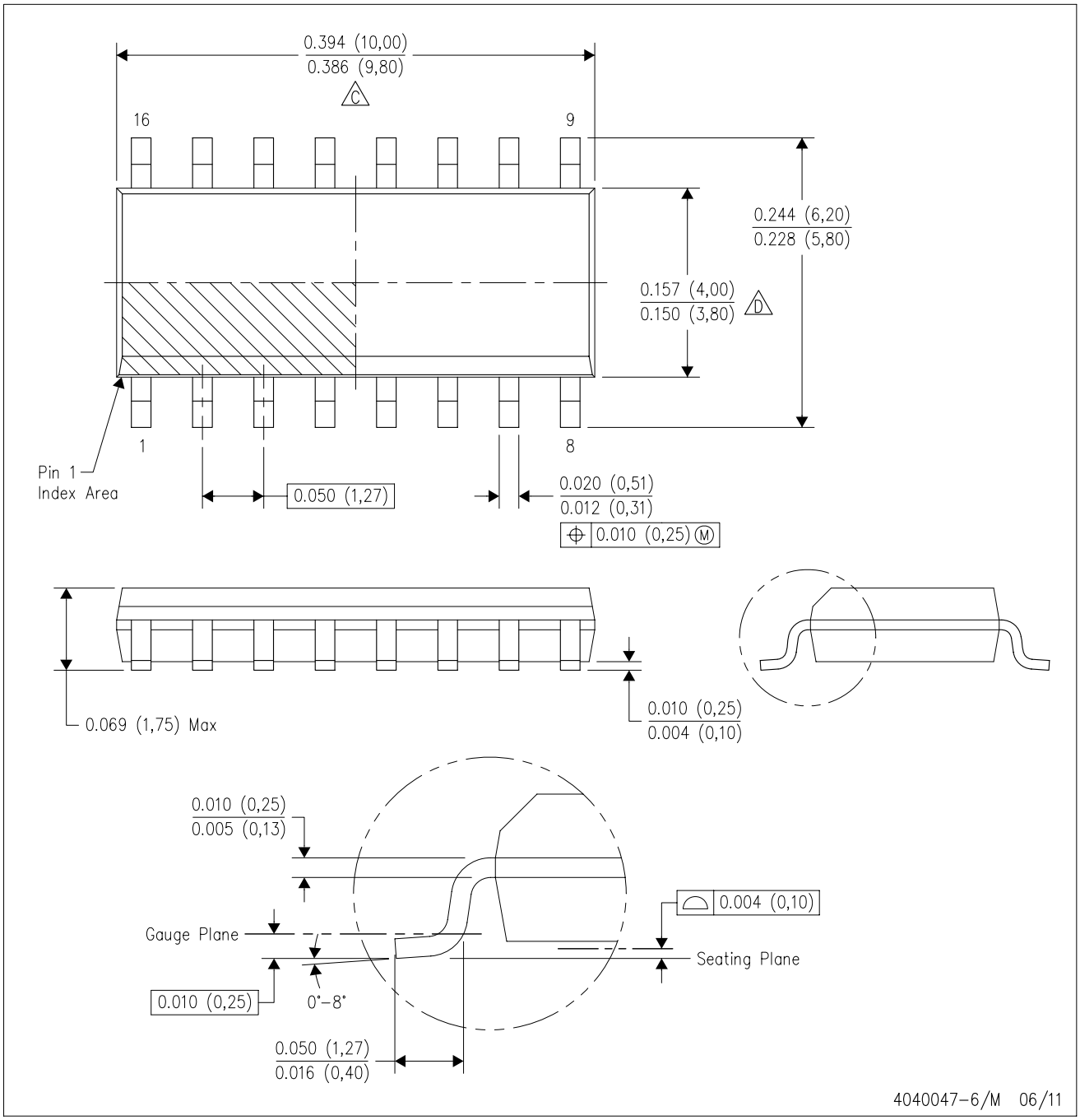

NOTES:
A. All linear dimensions are in inches (millimeters).
B. This drawing is subject to change without notice.
C. Body length does not include mold flash, protrusions, or gate burrs. Mold flash, protrusions, or gate burrs shall not exceed 0.006 (0,15) each side.
D. Body width does not include interlead flash. Interlead flash shall not exceed 0.017 (0,43) each side.
E. Reference JEDEC MS–012 variation AC.

PW0016A

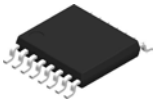

PACKAGE OUTLINE

TSSOP - 1.2 mm max height

SMALL OUTLINE PACKAGE

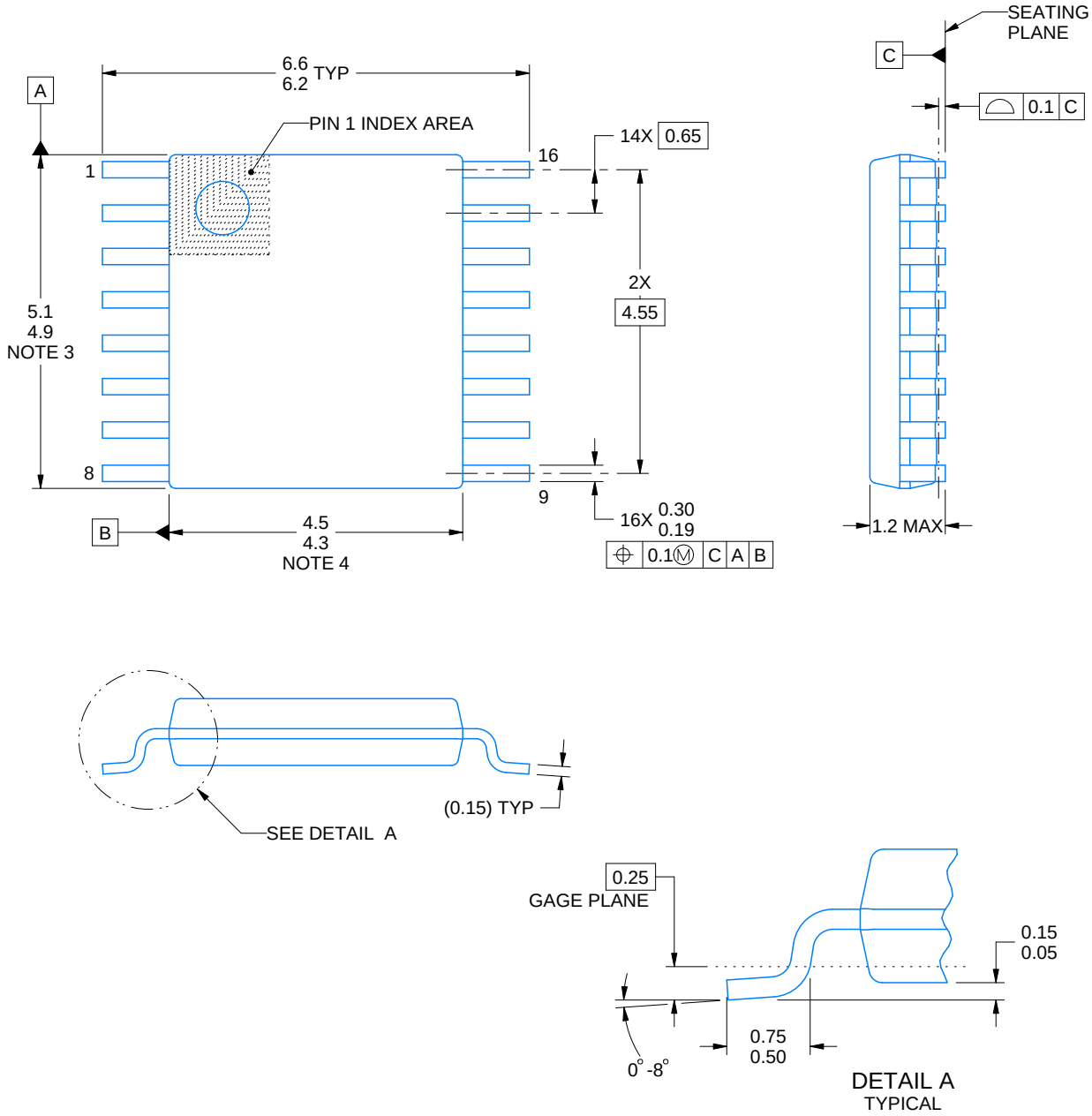

NOTES:

1. All linear dimensions are in millimeters. Any dimensions in parenthesis are for reference only. Dimensioning and tolerancing per ASME Y14.5M.
2. This drawing is subject to change without notice.
3. This dimension does not include mold flash, protrusions, or gate burrs. Mold flash, protrusions, or gate burrs shall not exceed 0.15 mm per side.
4. This dimension does not include interlead flash. Interlead flash shall not exceed 0.25 mm per side.
5. Reference JEDEC registration MO-153.

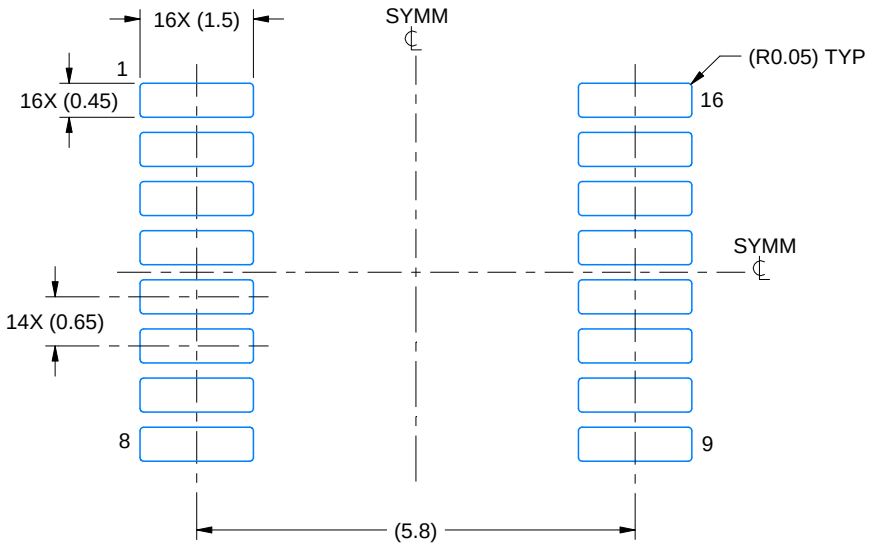

LAND PATTERN EXAMPLE
EXPOSED METAL SHOWN
SCALE: 10X

NON-SOLDER MASK DEFINED (PREFERRED)

SOLDER MASK DEFINED

SOLDER MASK DETAILS

4220204/A 02/2017

NOTES: (continued)

6. Publication IPC-7351 may have alternate designs.
7. Solder mask tolerances between and around signal pads can vary based on board fabrication site.

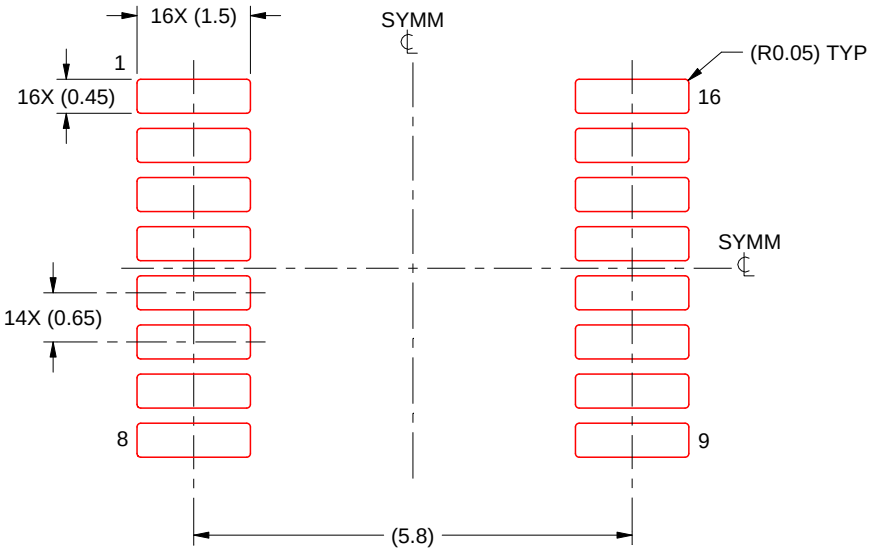

SOLDER PASTE EXAMPLE
BASED ON 0.125 mm THICK STENCIL
SCALE: 10X

4220204/A 02/2017

NOTES: (continued)

8. Laser cutting apertures with trapezoidal walls and rounded corners may offer better paste release. IPC-7525 may have alternate design recommendations.
9. Board assembly site may have different recommendations for stencil design.

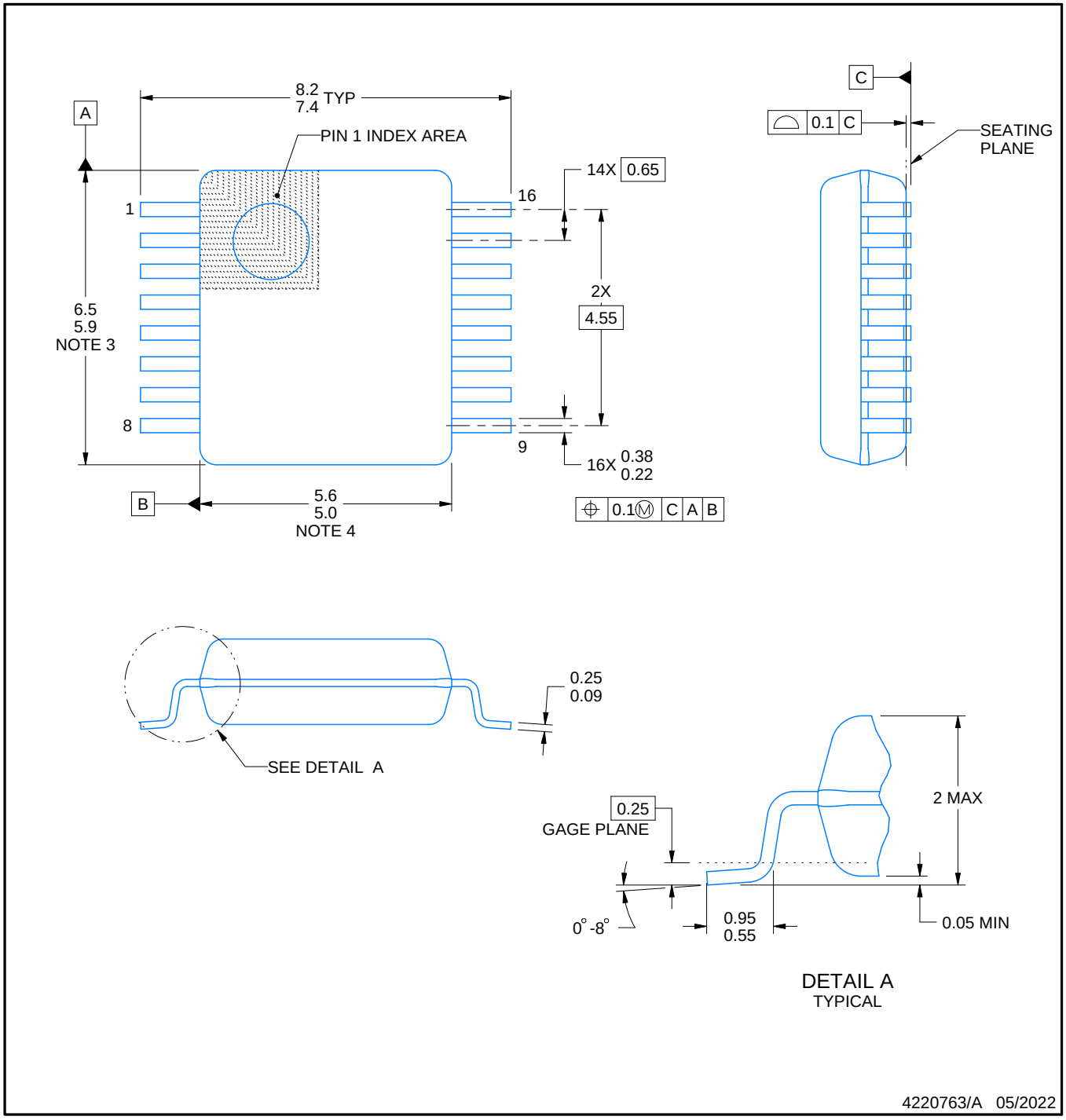

NOTES:

1. All linear dimensions are in millimeters. Any dimensions in parenthesis are for reference only. Dimensioning and tolerancing per ASME Y14.5M.
2. This drawing is subject to change without notice.
3. This dimension does not include mold flash, protrusions, or gate burrs. Mold flash, protrusions, or gate burrs shall not exceed 0.15 mm per side.
4. Reference JEDEC registration MO-150.

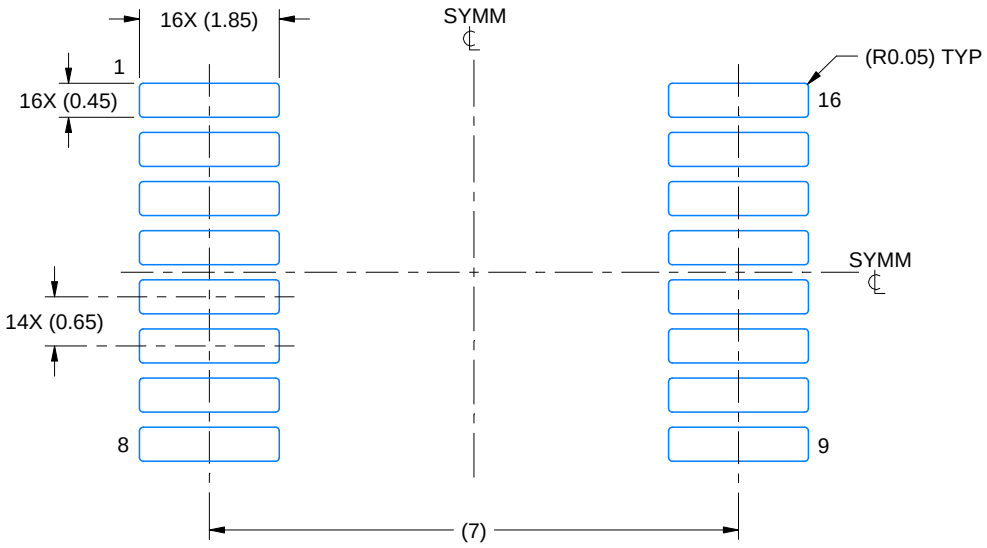

LAND PATTERN EXAMPLE
EXPOSED METAL SHOWN
SCALE: 10X

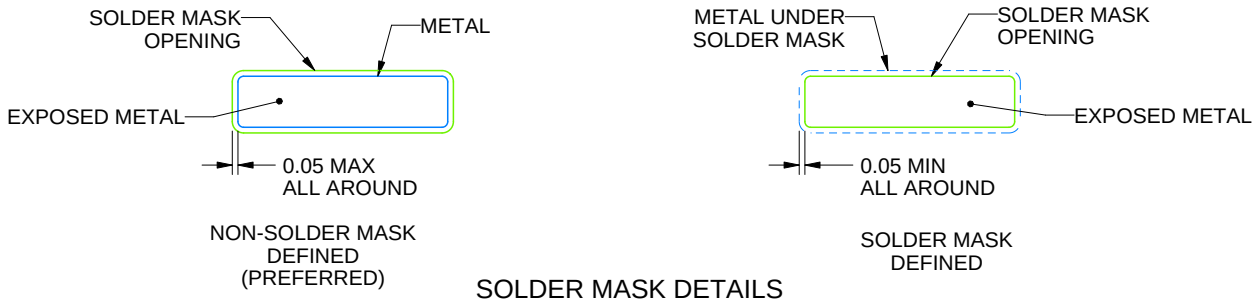

SOLDER MASK DETAILS

4220763/A 05/2022

NOTES: (continued)

5. Publication IPC-7351 may have alternate designs.
6. Solder mask tolerances between and around signal pads can vary based on board fabrication site.

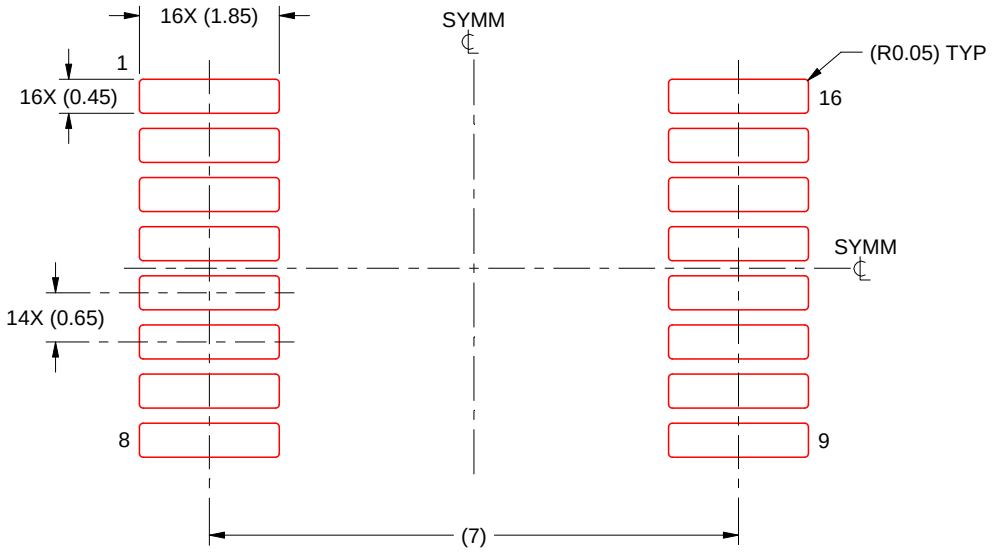

SOLDER PASTE EXAMPLE
BASED ON 0.125 mm THICK STENCIL
SCALE: 10X

4220763/A 05/2022

NOTES: (continued)

7. Laser cutting apertures with trapezoidal walls and rounded corners may offer better paste release. IPC-7525 may have alternate design recommendations.
8. Board assembly site may have different recommendations for stencil design.

MECHANICAL DATA

NS (R-PDSO-G)** **PLASTIC SMALL-OUTLINE PACKAGE**

14-PINS SHOWN

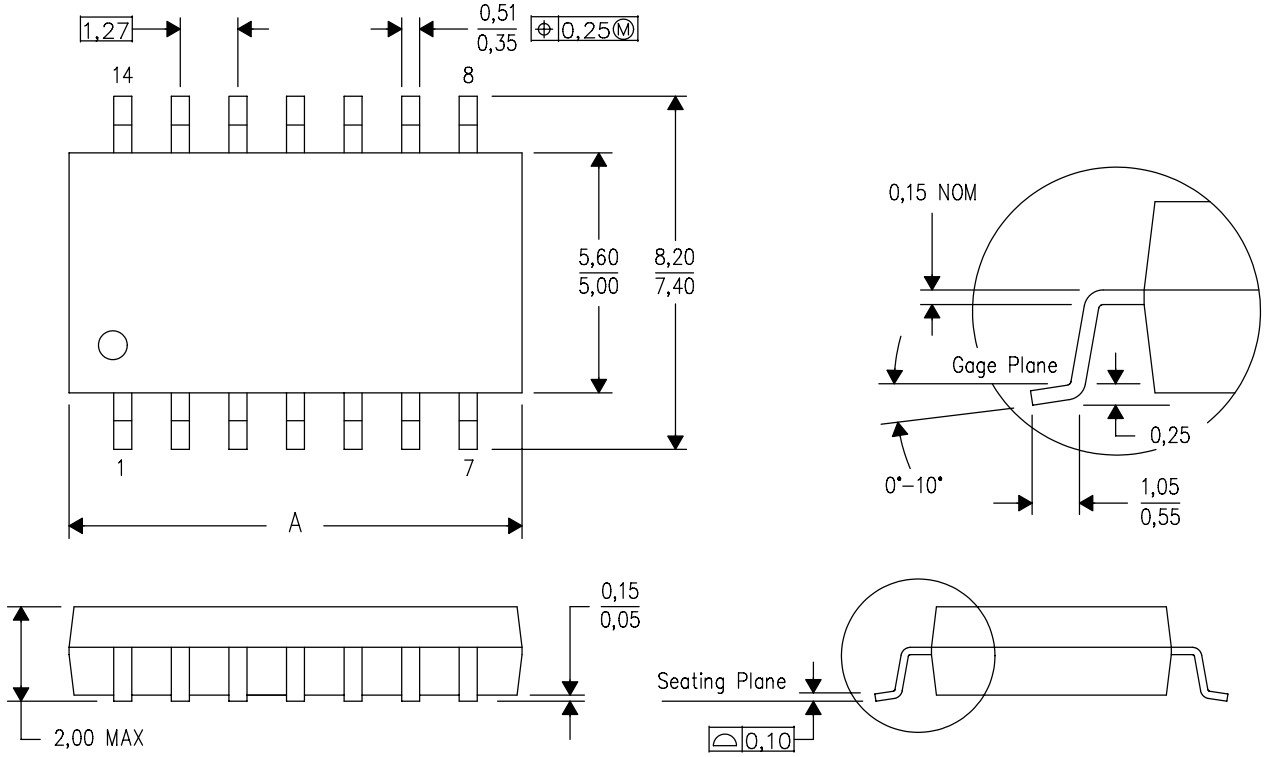

DIM \ PINS **	14	16	20	24
A MAX	10,50	10,50	12,90	15,30
A MIN	9,90	9,90	12,30	14,70

4040062/C 03/03

NOTES:
A. All linear dimensions are in millimeters.
B. This drawing is subject to change without notice.
C. Body dimensions do not include mold flash or protrusion, not to exceed 0,15.

DGV (R-PDSO-G)** **PLASTIC SMALL-OUTLINE**

24 PINS SHOWN

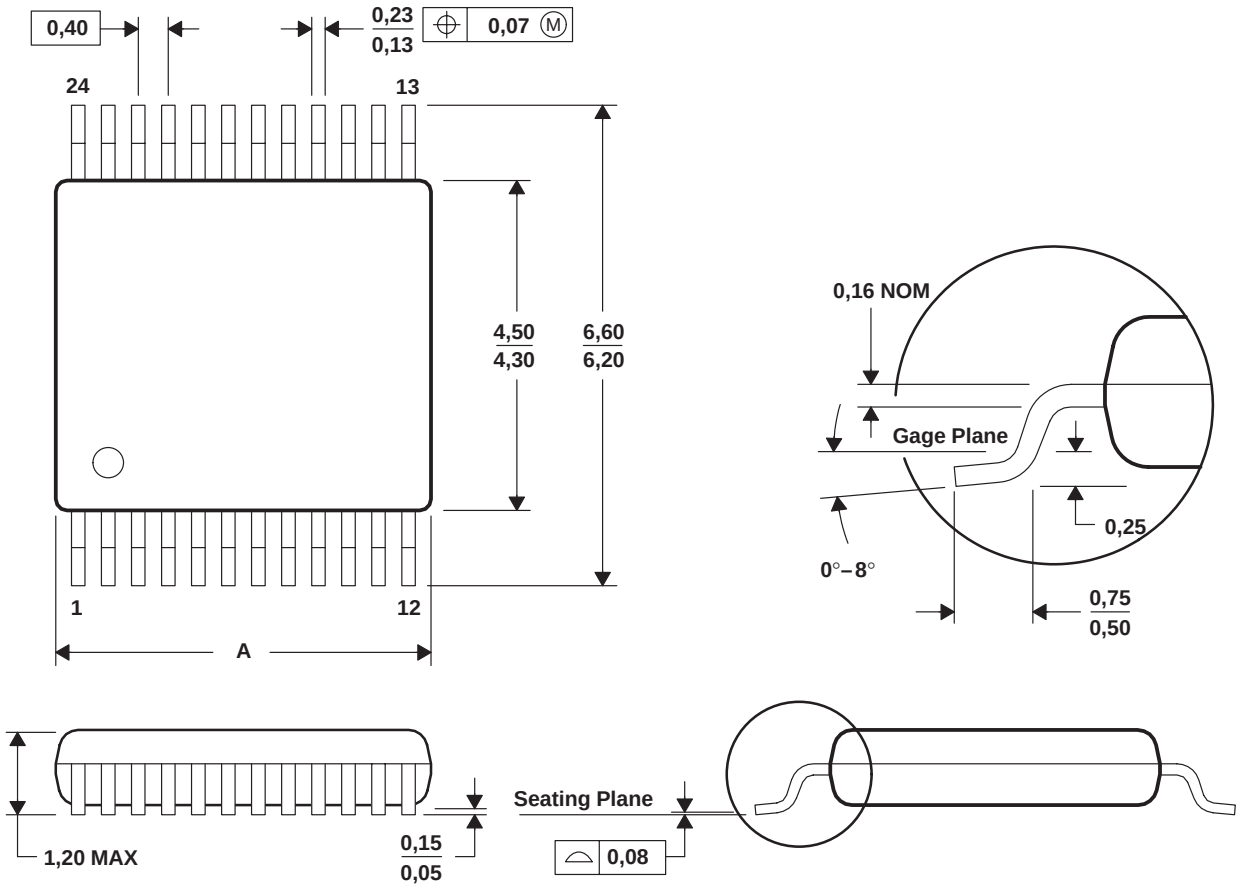

DIM \ PINS **	14	16	20	24	38	48	56
A MAX	3,70	3,70	5,10	5,10	7,90	9,80	11,40
A MIN	3,50	3,50	4,90	4,90	7,70	9,60	11,20

4073251/E 08/00

NOTES: A. All linear dimensions are in millimeters.
B. This drawing is subject to change without notice.
C. Body dimensions do not include mold flash or protrusion, not to exceed 0,15 per side.
D. Falls within JEDEC: 24/48 Pins – MO-153
14/16/20/56 Pins – MO-194

GENERIC PACKAGE VIEW

BQB 16

WQFN - 0.8 mm max height

2.5 x 3.5, 0.5 mm pitch

PLASTIC QUAD FLATPACK - NO LEAD

This image is a representation of the package family, actual package may vary.
Refer to the product data sheet for package details.

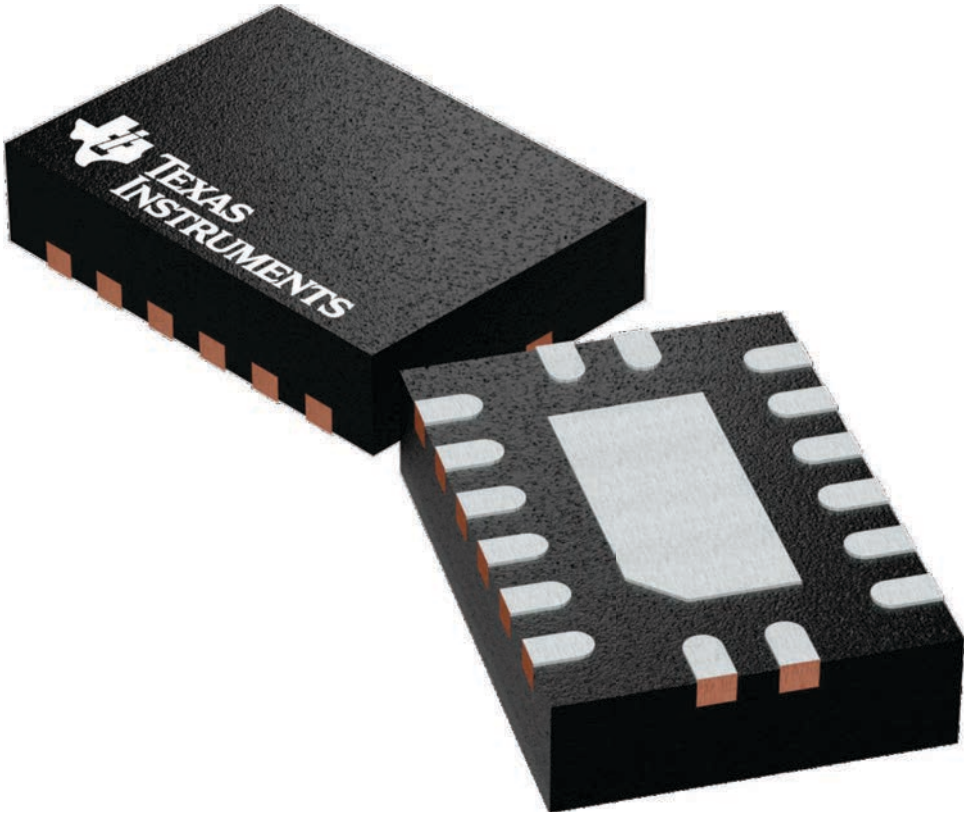

4226161/A

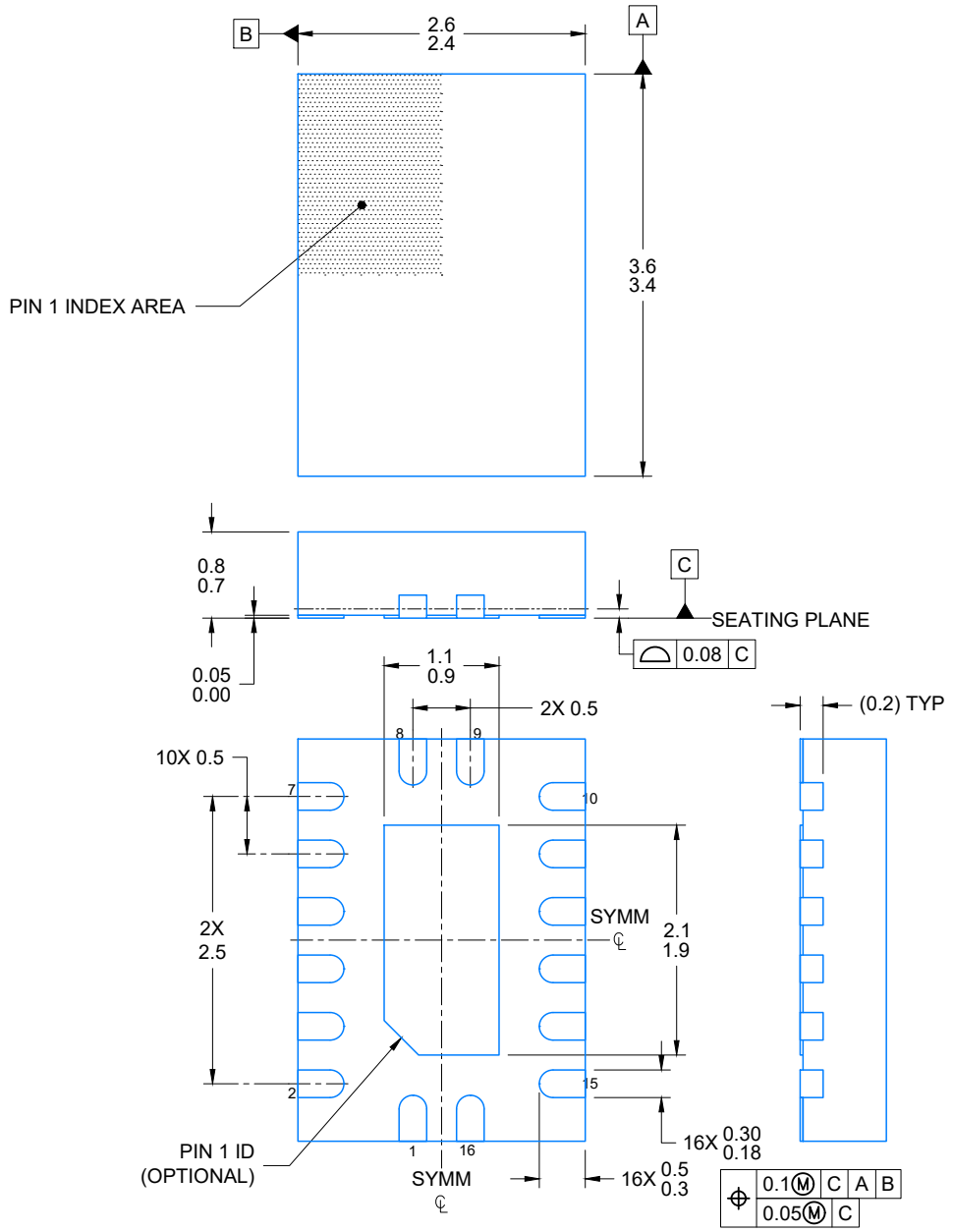

4224640/A 11/2018

NOTES:

1. All linear dimensions are in millimeters. Any dimensions in parenthesis are for reference only. Dimensioning and tolerancing per ASME Y14.5M.
2. This drawing is subject to change without notice.
3. The package thermal pad must be soldered to the printed circuit board for optimal thermal and mechanical performance.

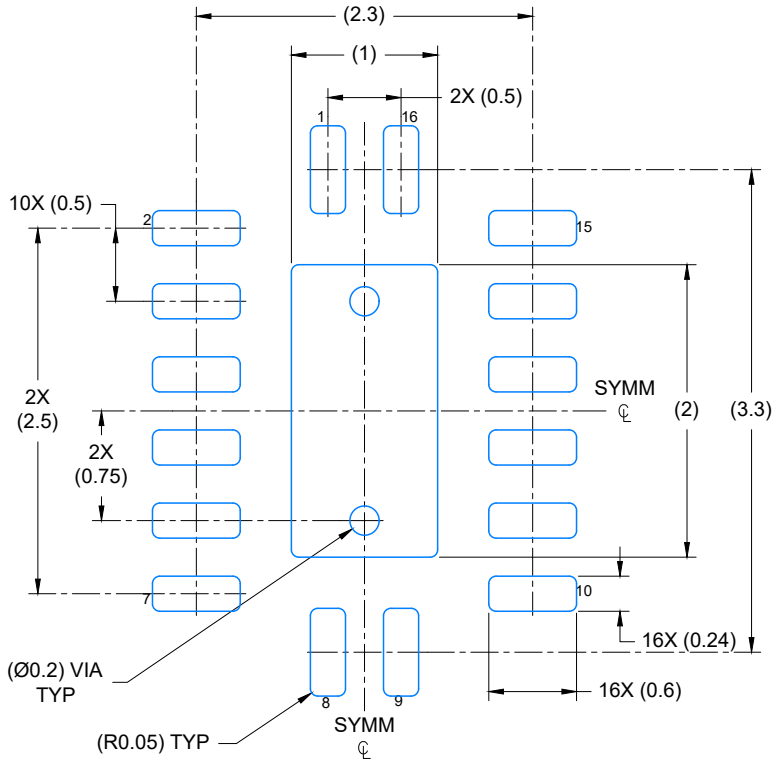

LAND PATTERN EXAMPLE
EXPOSED METAL SHOWN
SCALE: 20X

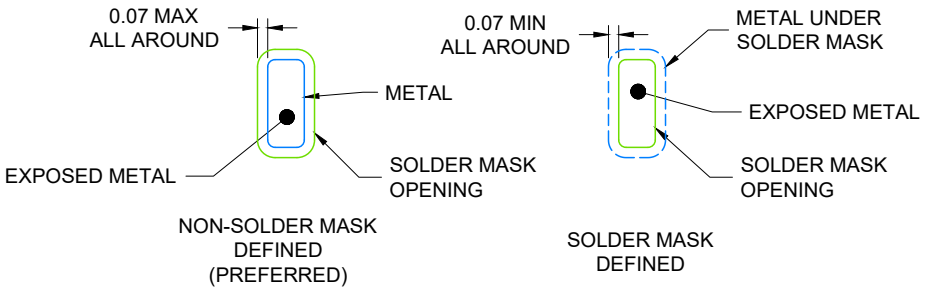

4224640/A 11/2018

NOTES: (continued)

4. This package is designed to be soldered to a thermal pad on the board. For more information, see Texas Instruments literature number SLUA271 (www.ti.com/lit/slua271).
5. Vias are optional depending on application, refer to device data sheet. If any vias are implemented, refer to their locations shown on this view. It is recommended that vias under paste be filled, plugged or tented.

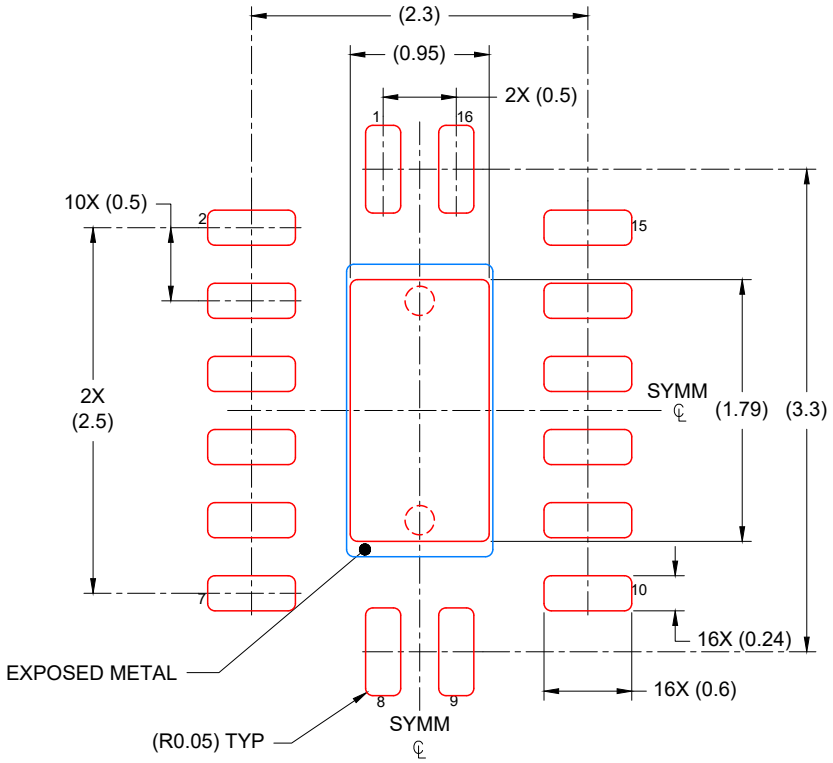

SOLDER PASTE EXAMPLE
BASED ON 0.125 mm THICK STENCIL

EXPOSED PAD
85% PRINTED COVERAGE BY AREA
SCALE: 20X

4224640/A 11/2018

NOTES: (continued)

6. Laser cutting apertures with trapezoidal walls and rounded corners may offer better paste release. IPC-7525 may have alternate design recommendations.

RGY (R-PVQFN-N16) PLASTIC QUAD FLATPACK NO-LEAD

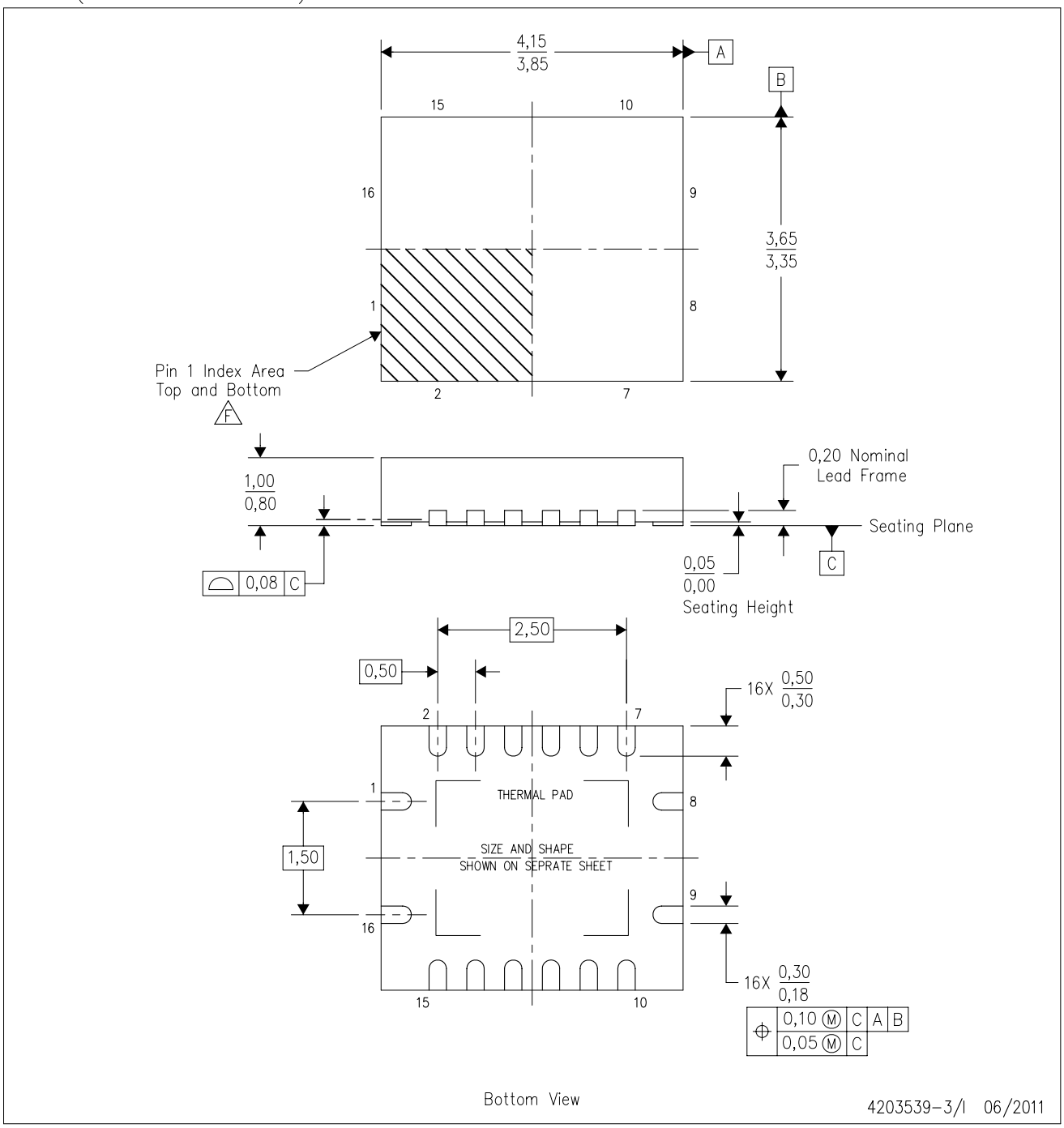

NOTES:
- A. All linear dimensions are in millimeters. Dimensioning and tolerancing per ASME Y14.5M-1994.
- B. This drawing is subject to change without notice.
- C. QFN (Quad Flatpack No-Lead) package configuration.
- D. The package thermal pad must be soldered to the board for thermal and mechanical performance.
- E. See the additional figure in the Product Data Sheet for details regarding the exposed thermal pad features and dimensions.
- F. Pin 1 identifiers are located on both top and bottom of the package and within the zone indicated. The Pin 1 identifiers are either a molded, marked, or metal feature.
- G. Package complies to JEDEC MO-241 variation BA.

RGY (R–PVQFN–N16) PLASTIC QUAD FLATPACK NO–LEAD

THERMAL INFORMATION

This package incorporates an exposed thermal pad that is designed to be attached directly to an external heatsink. The thermal pad must be soldered directly to the printed circuit board (PCB). After soldering, the PCB can be used as a heatsink. In addition, through the use of thermal vias, the thermal pad can be attached directly to the appropriate copper plane shown in the electrical schematic for the device, or alternatively, can be attached to a special heatsink structure designed into the PCB. This design optimizes the heat transfer from the integrated circuit (IC).

For information on the Quad Flatpack No–Lead (QFN) package and its advantages, refer to Application Report, QFN/SON PCB Attachment, Texas Instruments Literature No. SLUA271. This document is available at www.ti.com.

The exposed thermal pad dimensions for this package are shown in the following illustration.

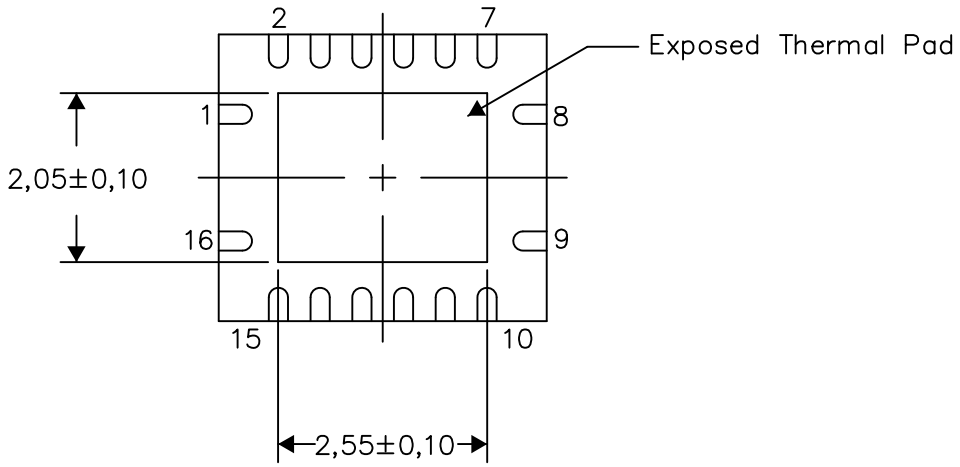

Bottom View

Exposed Thermal Pad Dimensions

4206353–3/P 03/14

NOTE: All linear dimensions are in millimeters

RGY (R–PVQFN–N16) PLASTIC QUAD FLATPACK NO–LEAD

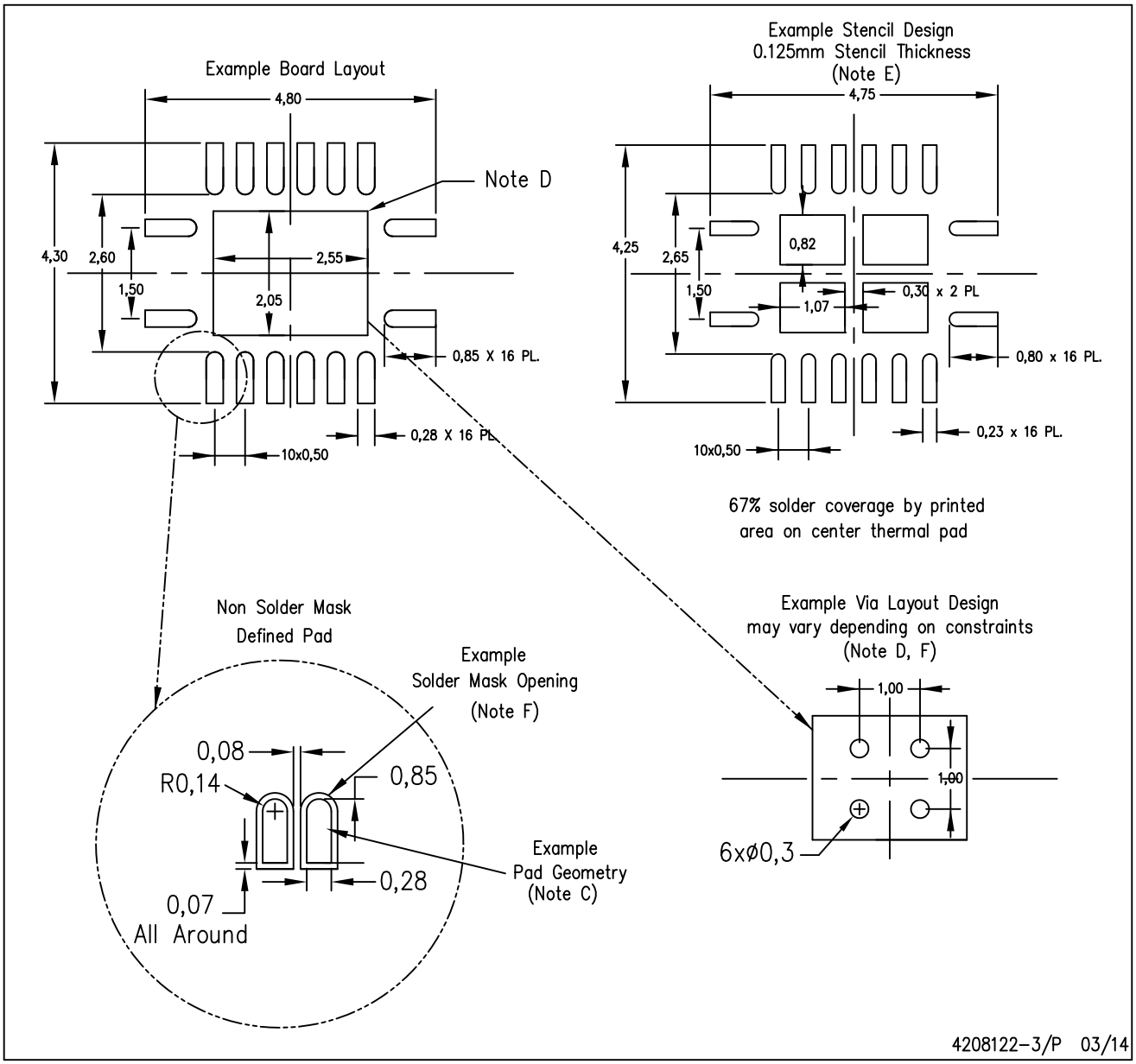

NOTES:
A. All linear dimensions are in millimeters.
B. This drawing is subject to change without notice.
C. Publication IPC–7351 is recommended for alternate designs.
D. This package is designed to be soldered to a thermal pad on the board. Refer to Application Note, Quad Flat–Pack QFN/SON PCB Attachment, Texas Instruments Literature No. SLUA271, and also the Product Data Sheets for specific thermal information, via requirements, and recommended board layout. These documents are available at www.ti.com <http://www.ti.com>.
E. Laser cutting apertures with trapezoidal walls and also rounding corners will offer better paste release. Customers should contact their board assembly site for stencil design recommendations. Refer to IPC 7525 for stencil design considerations.
F. Customers should contact their board fabrication site for minimum solder mask web tolerances between signal pads.

IMPORTANT NOTICE AND DISCLAIMER

TI PROVIDES TECHNICAL AND RELIABILITY DATA (INCLUDING DATA SHEETS), DESIGN RESOURCES (INCLUDING REFERENCE DESIGNS), APPLICATION OR OTHER DESIGN ADVICE, WEB TOOLS, SAFETY INFORMATION, AND OTHER RESOURCES “AS IS” AND WITH ALL FAULTS, AND DISCLAIMS ALL WARRANTIES, EXPRESS AND IMPLIED, INCLUDING WITHOUT LIMITATION ANY IMPLIED WARRANTIES OF MERCHANTABILITY, FITNESS FOR A PARTICULAR PURPOSE OR NON-INFRINGEMENT OF THIRD PARTY INTELLECTUAL PROPERTY RIGHTS.

These resources are intended for skilled developers designing with TI products. You are solely responsible for (1) selecting the appropriate TI products for your application, (2) designing, validating and testing your application, and (3) ensuring your application meets applicable standards, and any other safety, security, regulatory or other requirements.

These resources are subject to change without notice. TI grants you permission to use these resources only for development of an application that uses the TI products described in the resource. Other reproduction and display of these resources is prohibited. No license is granted to any other TI intellectual property right or to any third party intellectual property right. TI disclaims responsibility for, and you will fully indemnify TI and its representatives against, any claims, damages, costs, losses, and liabilities arising out of your use of these resources.

TI’s products are provided subject to TI’s Terms of Sale or other applicable terms available either on ti.com or provided in conjunction with such TI products. TI’s provision of these resources does not expand or otherwise alter TI’s applicable warranties or warranty disclaimers for TI products.

TI objects to and rejects any additional or different terms you may have proposed.

Mailing Address: Texas Instruments, Post Office Box 655303, Dallas, Texas 75265
Copyright © 2025, Texas Instruments Incorporated