TPS5429x 1.5-A and 2.5-A Dual, Fully-Synchronous Buck Converter With Integrated MOSFET

1 Features

- 4.5-V to 18-V Input Range
- Output Voltage Range 0.8 V to $D_{MAX} \times V_{IN}$
- Fully Integrated Dual Buck: 1.5 A and 2.5 A
- Three Fixed Switching Frequency Versions:
  - TPS54290: 300 kHz
  - TPS54291: 600 kHz
  - TPS54292: 1.2 MHz
- Integrated UVLO
- 0.8 V_{REF} With 1% Accuracy (0°C to 85°C)
- Internal Soft Start:
  - TPS54290: 5.2 ms
  - TPS54291: 2.6 ms
  - TPS54292: 1.3 ms
- Dual PWM Outputs 180° Out-of-Phase
- Dedicated Enable for Each Channel
- Current Mode Control for Simplified Compensation
- External Compensation
- Pulse-by-Pulse Overcurrent Protection, 2.2-A and 3.8-A Overcurrent Limit
- Integrated Bootstrap Switch
- Thermal Shutdown Protection at 145°C
- 16-Pin PowerPAD™ HTSSOP Package

2 Applications

- Set-Top Boxes
- Digital TVs
- Power for DSP
- Consumer Electronics

3 Description

The TPS54290, TPS54291, and TPS54292 devices are dual-output, fully synchronous buck converters capable of supporting applications with a minimal number of external components. It operates from a 4.5-V to 18-V input supply voltage, and supports output voltages as low as 0.8 V and as high as 90% of the input voltage.

Both high-side and low-side MOSFETs are integrated to provide fully synchronous conversion with higher efficiency. Channel 1 can provide up to 1.5 A of continuous current. Meanwhile, Channel 2 supports up to 2.5 A.

Current mode control simplifies the compensation. The external compensation adds flexibility for the user to choose different type of output capacitors.

180° out-of-phase operation reduces the ripple current through the input capacitor, providing the benefit of reducing input capacitance, alleviating EMI and increasing capacitor life.

Device Information(1)

PART NUMBER	PACKAGE	BODY SIZE (NOM)
TPS54290 TPS54291 TPS54292	HTSSOP (16)	5.00 mm × 4.40 mm

(1) For all available packages, see the orderable addendum at the end of the data sheet.

Simplified Schematic

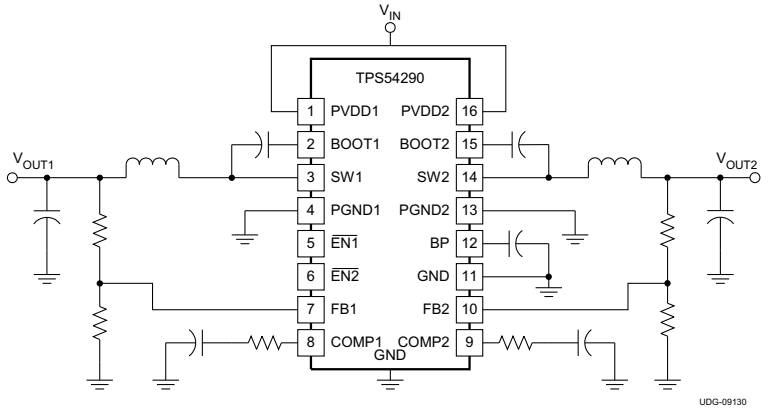

Copyright © 2016, Texas Instruments Incorporated

An IMPORTANT NOTICE at the end of this data sheet addresses availability, warranty, changes, use in safety-critical applications, intellectual property matters and other important disclaimers. PRODUCTION DATA.

Table of Contents

1 Features ... 1
2 Applications ... 1
3 Description ... 1
4 Revision History ... 2
5 Device Comparison Table ... 3
6 Pin Configuration and Functions ... 3
7 Specifications ... 5
7.1 Absolute Maximum Ratings ... 5
7.2 ESD Ratings ... 5
7.3 Recommended Operating Conditions ... 5
7.4 Thermal Information ... 5
7.5 Electrical Characteristics ... 6
7.6 Typical Characteristics ... 8
8 Detailed Description ... 10
8.1 Overview ... 10
8.2 Functional Block Diagram ... 10
8.3 Feature Description ... 11
8.4 Device Functional Modes ... 17
9 Application and Implementation ... 18
9.1 Application Information ... 18
9.2 Typical Applications ... 18
10 Power Supply Recommendations ... 25
11 Layout ... 25
11.1 Layout Guidelines ... 25
11.2 Layout Examples ... 26
11.3 Overtemperature Protection and Junction Temperature Rise ... 27
11.4 Power Derating ... 28
12 Device and Documentation Support ... 29
12.1 Documentation Support ... 29
12.2 Related Links ... 29
12.3 Receiving Notification of Documentation Updates 29
12.4 Community Resources ... 29
12.5 Trademarks ... 29
12.6 Electrostatic Discharge Caution ... 29
12.7 Glossary ... 29
13 Mechanical, Packaging, and Orderable Information ... 30

4 Revision History

NOTE: Page numbers for previous revisions may differ from page numbers in the current version.

Changes from Original (October 2009) to Revision A	Page
• Added *ESD Ratings* table, *Thermal Information* table, *Feature Description* section, *Device Functional Modes*, *Application and Implementation* section, *Power Supply Recommendations* section, *Layout* section, *Device and Documentation Support* section, and *Mechanical, Packaging, and Orderable Information* section	1
• Deleted *Ordering Information* table; see POA at the end of the data sheet	1
• Deleted Lead temperature (260°C maximum)	5
• Added *Thermal Information* table to replace the *Package Dissipation Ratings* table	5

Copyright © 2009–2016, Texas Instruments Incorporated

5 Device Comparison Table

DEVICE	DESCRIPTION
TPS40222	5-V Input, 1.5-A, Non-Synchronous Buck Converter
TPS5428x	2-A Dual Non-Synchronous Converter with Integrated High-Side FET
TPS5538x	3-A Dual Non-Synchronous Converter with Integrated High-Side FET

6 Pin Configuration and Functions

PWP Package
16-Pin HTSSOP
Top View

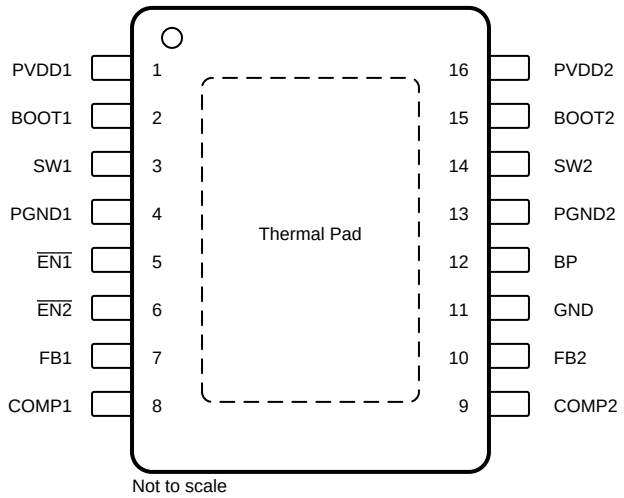

Not to scale

Pin Functions

PIN		I/O	DESCRIPTION
NO.	NAME		
1	PVDD1	I	Power input to the Output1 high-side MOSFET only. This pin must be locally bypassed to PGND1 with a low-ESR ceramic capacitor of 10 µF or greater. PVDD1 and PVDD2 could be tied externally together.
2	BOOT1	I	Input supply to the high-side gate driver for Output1. Connect a 22-nF to 68-nF capacitor from this pin to SW1. This capacitor is charged from the BP pin voltage through an internal switch. The switch is turned ON during the off-time of the converter. To slow down the turn ON of the internal FET, a small resistor (2 Ω to 5 Ω) may be placed in series with the bootstrap capacitor.
3	SW1	O	Source (switching) output for Output1 PWM
4	PGND1	—	Power ground for Outputx. It is separated from GND to prevent the switching noise coupled to the internal logic circuits.
5	$\overline{\text{EN1}}$	I	Active-low enable input for Output1. If the voltage on this pin is greater than 1.5 V, Output1 is disabled (high-side switch is OFF). A voltage of less than 0.9 V enables Output1 and allow soft start of Output1 to begin. An internal current source drives this pin to PVDD2 if left floating. Connect this pin to GND to bypass the enable function.
6	$\overline{\text{EN2}}$	I	Active-low enable input for Output2. If the voltage on this pin is greater than 1.5 V, Output2 is disabled (high-side switch is OFF). A voltage of less than 0.9 V enables Output2 and allow soft start of Output2 to begin. An internal current source drives this pin to PVDD2 if left floating. Connect this pin to GND to bypass the enable function.
7	FB1	I	Voltage feedback pin for Outputx. The internal transconductance error amplifier adjusts the PWM for Outputx to regulate the voltage at this pin to the internal 0.8-V reference. A series resistor divider from Outputx to ground, with the center connection tied to this pin, determines the value of the regulated output voltage.
8	COMP1	O	Output of the transconductance (g_M) amplifier. A R-C compensation network is connected from COMPx to GND.

Copyright © 2009–2016, Texas Instruments Incorporated

Pin Functions (continued)

PIN		I/O	DESCRIPTION
NO.	NAME		
9	COMP2	O	Output of the transconductance (g_M) amplifier. A R-C compensation network is connected from COMPx to GND.
10	FB2	I	Voltage feedback pin for Outputx. The internal transconductance error amplifier adjusts the PWM for Outputx to regulate the voltage at this pin to the internal 0.8-V reference. A series resistor divider from Outputx to ground, with the center connection tied to this pin, determines the value of the regulated output voltage.
11	GND	—	Analog ground pin for the device.
12	BP	—	Regulated voltage to charge the bootstrap capacitors. Bypass this pin to GND with a low-ESR, 4.7-µF ceramic capacitor (10-µF capacitor preferred).
13	PGND2	—	Power ground for Outputx. It is separated from GND to prevent the switching noise coupled to the internal logic circuits.
14	SW2	O	Source (switching) output for Output2 PWM.
15	BOOT2	I	Input supply to the high-side gate driver for Output2. Connect a 22-nF to 68-nF capacitor from this pin to SW2. This capacitor is charged from the BP pin voltage through an internal switch. The switch is turned ON during the off-time of the converter. To slow down the turn ON of the internal FET, a small resistor (2 Ω to 5 Ω) may be placed in series with the bootstrap capacitor.
16	PVDD2	I	The PVDD2 pin provides power to the device control circuitry, provides the pullup for the $\overline{EN1}$ and $\overline{EN2}$ pins and provides power to the Output2 high-side MOSFET. This pin must be locally bypassed to PGND2 with a low-ESR ceramic capacitor of 10 µF or greater. The UVLO function monitors PVDD2 and enables the device when PVDD2 is greater than 4.2 V.
—	Thermal Pad	—	This pad must be tied externally to a ground plane.

Copyright © 2009–2016, Texas Instruments Incorporated

7 Specifications

7.1 Absolute Maximum Ratings

over operating free-air temperature range (unless otherwise noted)[1]

	MIN	MAX	UNIT
PVDD1, PVDD2, $\overline{EN1}$, $\overline{EN2}$	–0.3	20	V
SW1, SW2	–1	20	V
BOOT1, BOOT2	–0.3	SW + 7	V
SW1, SW2 transient (< 50 ns)	–3	20	V
BP		7	V
FB1, FB2	–0.3	3	V
Operating junction temperature, T_J	–40	145	°C
Storage temperature, T_{stg}	–55	155	°C

(1) Stresses beyond those listed under *Absolute Maximum Ratings* may cause permanent damage to the device. These are stress ratings only, which do not imply functional operation of the device at these or any other conditions beyond those indicated under *Recommended Operating Conditions*. Exposure to absolute-maximum-rated conditions for extended periods may affect device reliability.

7.2 ESD Ratings

			VALUE	UNIT
$V_{(ESD)}$	Electrostatic discharge	Human-body model (HBM), per ANSI/ESDA/JEDEC JS-001[1]	±2000	V
		Charged-device model (CDM), per JEDEC specification JESD22-C101[2]	±1500	

(1) JEDEC document JEP155 states that 500-V HBM allows safe manufacturing with a standard ESD control process.
(2) JEDEC document JEP157 states that 250-V CDM allows safe manufacturing with a standard ESD control process.

7.3 Recommended Operating Conditions

over operating free-air temperature range (unless otherwise noted)

		MIN	MAX	UNIT
V_{DD}	Input voltage	4.5	18	V
T_J	Junction temperature	–40	125	°C

7.4 Thermal Information

THERMAL METRIC[1]		TPS54290 TPS54291 TPS54292 PWP (HTSSOP) 16 PINS	UNIT
$R_{\theta JA}$	Junction-to-ambient thermal resistance	39.2	°C/W
$R_{\theta JC(top)}$	Junction-to-case (top) thermal resistance	27.7	°C/W
$R_{\theta JB}$	Junction-to-board thermal resistance	22.3	°C/W
ψ_{JT}	Junction-to-top characterization parameter	0.8	°C/W
ψ_{JB}	Junction-to-board characterization parameter	22.1	°C/W
$R_{\theta JC(bot)}$	Junction-to-case (bottom) thermal resistance	2.7	°C/W

(1) For more information about traditional and new thermal metrics, see the *Semiconductor and IC Package Thermal Metrics* application report.

7.5 Electrical Characteristics

T_J = –40°C to 125°C, PVDD1 and PVDD2 = 12 V (unless otherwise noted)

PARAMETER		TEST CONDITIONS	MIN	TYP	MAX	UNIT
INPUT SUPPLY						
PVDD1, PVDD2	Input voltage range		4.5		18	V
IDD_{SDN}	Shutdown current	$\overline{EN1}$ = $\overline{EN2}$ = PVDD2 (4.5 V to 18 V)		80	160	µA
IDD_Q	Quiescent, non-switching	FB1 = FB2 = 1 V, outputs off		1.65	3	mA
IDD_{SW}	Quiescent, while switching	FB1 = FB2 = 0.75 V, measured at BP		10		mA
UVLO	Minimum turnon voltage	PVDD2 only	3.8	4.1	4.4	V
$UVLO_{HYS}$	Hysteresis			460	600	mV
t_{start} (1)(2)	Time from start-up to soft start begin	CBP = 10 µF, $\overline{EN1}$ and $\overline{EN2}$ go low simultaneously		1.5		ms
ENABLE (ACTIVE LOW)						
$V_{\overline{ENx}}$	Enable threshold voltage		0.9	1.2	1.5	V
	Hysteresis			70		mV
$I_{\overline{ENx}}$	Enable pullup current				10	µA
$t_{\overline{ENx}}$ (1)	Time from enable to soft start begin	Other enable pin = GND		10		µs
BP REGULATOR						
BP	Regulator voltage	8 V ≤ V_{PVDD2} ≤ 18 V	5	5.2	5.6	V
BP_{LDO}	Dropout voltage	V_{PVDD2} = 4.5 V		400		mV
I_{BPS}	Regulator short current	4.5 V ≤ V_{PVDD2} ≤ 18 V		25		mA
OSCILLATOR						
f_{SW}	Oscillator frequency	TPS54290	260	300	360	kHz
		TPS54291	520	600	720	
		TPS54292	1040	1200	1440	kHz
t_{DEAD} (1)	Clock dead time			140		ns
g_M TRANSCONDUCTANCE AMPLIFIER AND VOLTAGE REFERENCE (APPLIES TO BOTH CHANNELS)						
V_{FB}	Feedback input voltage	0°C < T_J < 85°C	792	800	808	mV
		–40ºC < T_J < 125°C	786	800	812	mV
I_{FB}	Feedback Input bias current	V_{FB} = 0.8 V		5	50	nA
g_M (1)	Transconductance		200	325	450	µS
I_{SOURCE}	Error amplifier source current capability	V_{FB1} = V_{FB2} = 0.7 V, V_{COMP} = 0 V	15	30	40	µA
I_{SINK}	Error amplifier sink current capability	V_{FB1} = V_{FB2} = 0.9 V, V_{COMP} = 2 V	15	30	40	µA
SOFT START (APPLIES TO BOTH CHANNELS)						
t_{SS}	Soft-start time	TPS54290, 0 V ≤ V_{FB} ≤ 0.8 V	4	5.2	6	ms
		TPS54291	2	2.6	3	
		TPS54292	1	1.3	1.6	
OVERCURRENT PROTECTION						
I_{CL1}	Current limit CH1		1.8	2.2	2.6	A
I_{CL2}	Current limit CH2		3.2	3.8	4.6	A
T_{HICCUP} (1)	Hiccup timeout	TPS54290		30		ms
		TPS54291		16		
		TPS54292		8		
t_{ONOC} (1)	Minimum overcurrent pulse			150	200	ns

(1) Specified by design. Not tested in production.
(2) When both outputs are started simultaneously, a 20-mA current source charges the BP capacitor. Faster times are possible with a lower BP capacitor value (see *Input UVLO and Start-Up*)

Copyright © 2009–2016, Texas Instruments Incorporated

Electrical Characteristics (continued)

T_J = –40°C to 125°C, PVDD1 and PVDD2 = 12 V (unless otherwise noted)

PARAMETER		TEST CONDITIONS	MIN	TYP	MAX	UNIT
BOOTSTRAP (APPLIED TO BOTH CHANNELS)						
R_{BOOT}	Bootstrap switch resistance	R(BP to BOOT), I external = 10 mA		33		Ω
PGOOD						
V_{UV}	Feedback voltage limit for PGOOD			660	730	mV
$V_{PG\text{-}HYST}$ (1)	PGOOD hysteresis voltage on FB			40		mV
OUTPUT STAGE (APPLIED TO BOTH CHANNELS)						
$R_{DS(on1)}$(HS) (1)	On-resistance of high-side FET and bondwire on CH1			170	265	mΩ
$R_{DS(on2)}$(HS) (1)	On-resistance of high-side FET and bondwire on CH2			120	190	mΩ
$R_{DS(on1)}$(LS) (1)	On-resistance of low-side FET and bondwire on CH1			120	190	mΩ
$R_{DS(on2)}$(LS) (1)	On-resistance of low-side FET and bondwire on CH2			90	150	mΩ
t_{ON_MIN} (1)	Minimum controllable pulse width			150		ns
Minimum duty cycle		V_{FB} = 0.9 V			0%	
t_{DEAD} (1)	Output driver dead time	HDRV off to LDRV on		20		ns
		LDRV off to HDRV on		20		ns
D_{MAX}	Maximum duty cycle	TPS54290	90%	96%		
		TPS54291	85%	91%		
		TPS54292	78%	82%		
THERMAL SHUTDOWN						
T_{SD} (1)	Shutdown temperature			145		°C
T_{SD_HYS} (1)	Hysteresis			20		°C

Copyright © 2009–2016, Texas Instruments Incorporated

7.6 Typical Characteristics

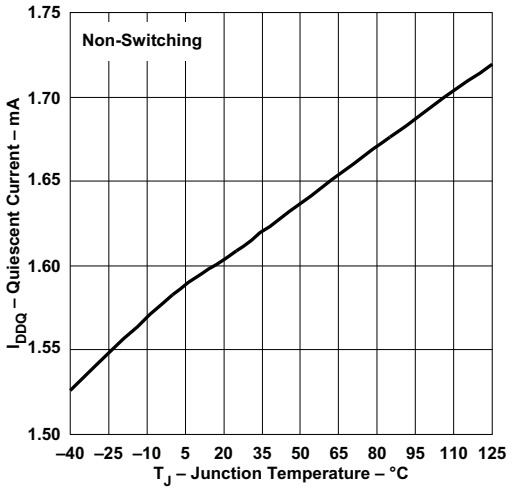

Figure 1. Quiescent Current vs Temperature

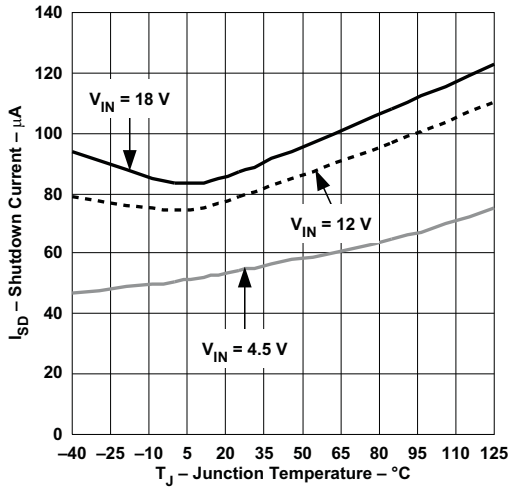

Figure 2. Shutdown Current vs Temperature

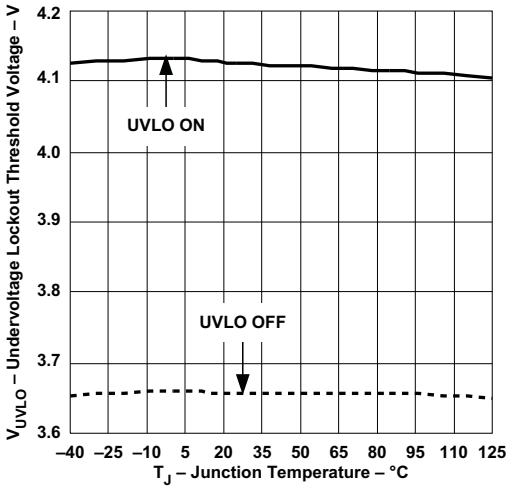

Figure 3. UVLO Turnon and Turnoff Thresholds vs Temperature

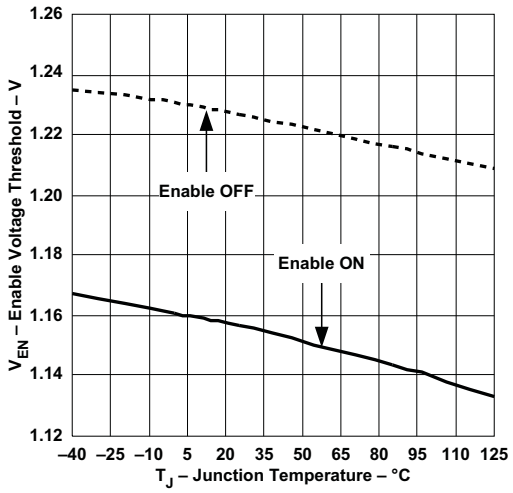

Figure 4. $\overline{ENx}$ Turnon and Turnoff Threshold vs Temperature

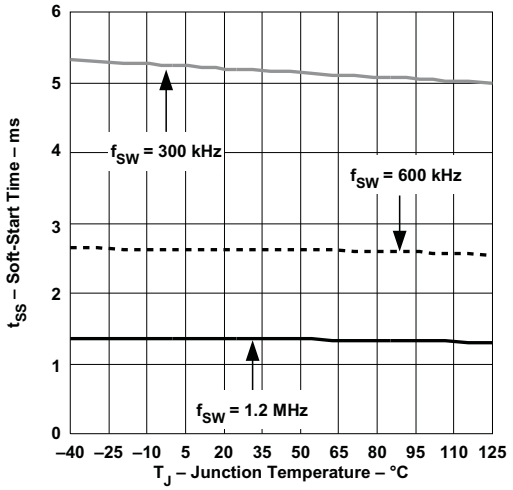

Figure 5. Soft-Start Time vs Temperature

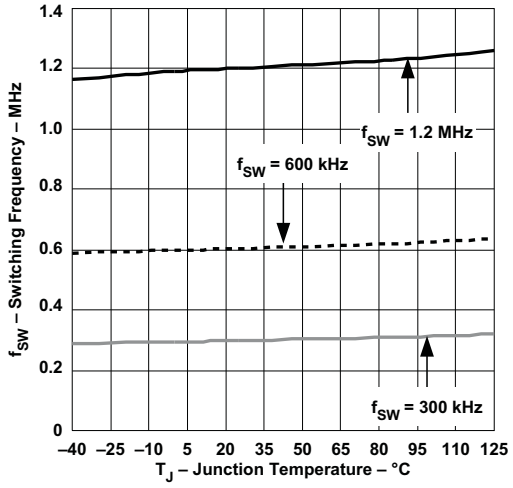

Figure 6. Oscillator Frequency vs Temperature

Copyright © 2009–2016, Texas Instruments Incorporated

Typical Characteristics (continued)

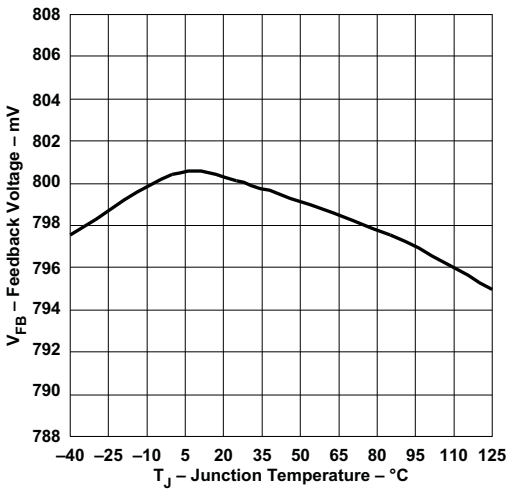

Figure 7. Feedback Voltage vs Temperature

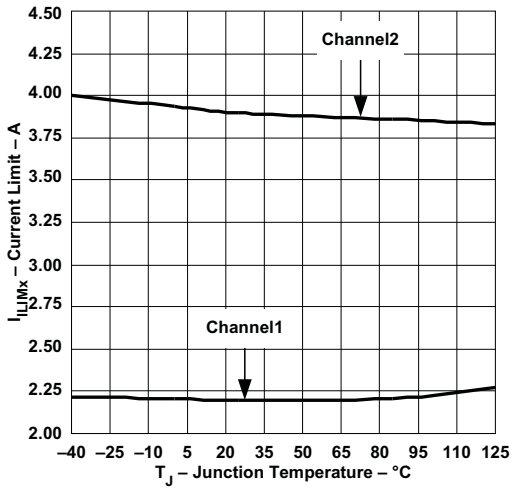

Figure 8. Current Limit vs Temperature

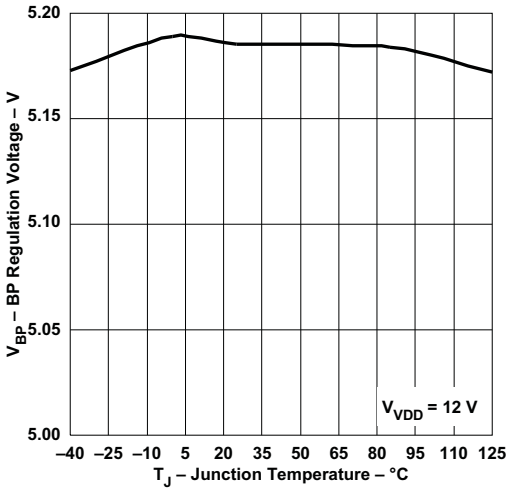

Figure 9. BP Voltage vs Temperature

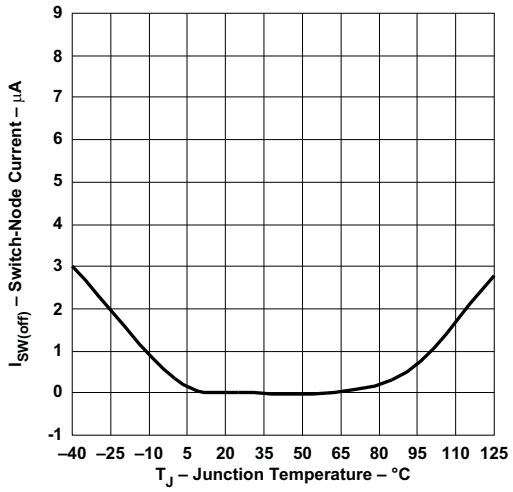

Figure 10. SW Node Leakage Current vs Temperature

8 Detailed Description

8.1 Overview

The TPS5429x is a dual-output fully synchronous buck converter. Each PWM channel contains an error amplifier, current mode pulse width modulator (PWM), switching and rectifying MOSFETs, enable, and fault protection circuitry. Common to the two channels are the internal voltage regulator, voltage reference, and clock oscillator.

8.2 Functional Block Diagram

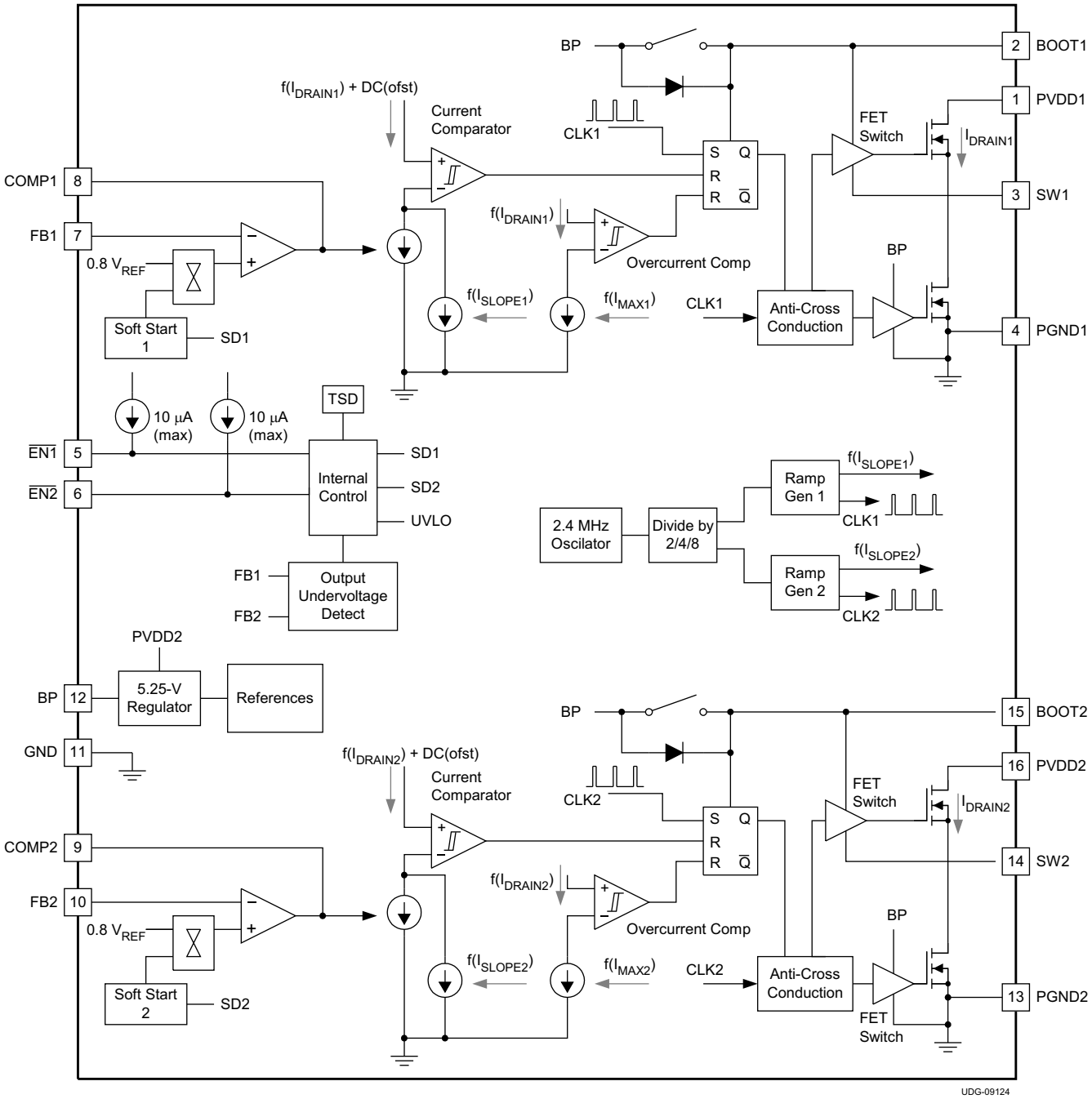

Copyright © 2016, Texas Instruments Incorporated

Copyright © 2009–2016, Texas Instruments Incorporated

8.3 Feature Description

8.3.1 Voltage Reference

The band-gap cell common to both outputs, trimmed to 800 mV. The reference voltage is 1% accurate in the temperature range from 0°C to 85°C.

8.3.2 Oscillator

The oscillator frequency is internally fixed at 2.4 MHz that is divided by 8/4/2 to generate the ramps for TPS5429x, respectively. The two outputs are internally configured to operate on alternating switch cycles (that is, 180° out-of-phase).

8.3.3 Input UVLO and Start-Up

When the voltage at the PVDD2 pin is less than 4.4 V, a portion of the internal bias circuitry is operational, and all other functions are held OFF. All of the internal MOSFETs are also held OFF. When the PVDD2 voltage rises above the UVLO turnon threshold, the state of the enable pins determines the remainder of the internal start-up sequence. If either output is enabled ($\overline{ENx}$ pulled low), the BP regulator turns on, charging the BP capacitor with a 20-mA current. When the BP pin is greater than 4 V, PWM is enabled and soft start commences.

NOTE

The internal regulator and control circuitry are powered from PVDD2. The voltage on PVDD1 may be higher or lower than PVDD2.

8.3.4 Enable and Timed Turnon of the Outputs

Each output has a dedicated (active low) enable pin. If left floating, an internal current source pulls the pin to PVDD2. By grounding, or by pulling the $\overline{ENx}$ pin to below approximately 1.25 V with an external circuit, the associated output is enabled and soft start is initiated.

If both enable pins are left in the *high* state, the device operates in a shutdown mode, where the BP regulator shuts down and minimal house keeping functions are active. The total standby current from both PVDD pins is 80 µA at 12-V input supply.

An R-C connect to an $\overline{ENx}$ pin may be used to delay the turnon of the associated output after power is applied to PVDDx (see Figure 11). After power is applied to PVDD2, the voltage on the $\overline{ENx}$ pin slowly decays towards ground. Once the voltage decays to approximately 1.25 V, then the output is enabled and the start-up sequence begins. If it is desired to enable the outputs of the device immediately upon the application of power to the PVDD2 pin, then omit these two components and tie the $\overline{ENx}$ pin to GND directly.

If an R-C circuit is used to delay the turnon of the output, the resistor value must be an order of magnitude less than 1.25 V / 10 µA or 120 kΩ. A suggested value is 51 kΩ. This allows the $\overline{ENx}$ voltage to decay below the 1.25-V threshold while the 10-µA bias current flows.

The time to start (after the application of PVDD2) is Equation 1.

$$t_{START} = -R \times C \times \ln\left(\frac{\left(V_{TH} - I_{\overline{ENx}}\right) \times R}{V_{IN} - 2 \times I_{\overline{ENx}} \times R}\right) (s) \quad (1)$$

where

- R and C are the timing components
- V_{TH} is the 1.25-V enable threshold voltage
- I_{EN} is the 10-µA maximum enable pin biasing current

Figure 11 and Figure 12 illustrate startup delay with an R-C filter on the enable pin(s).

Feature Description (continued)

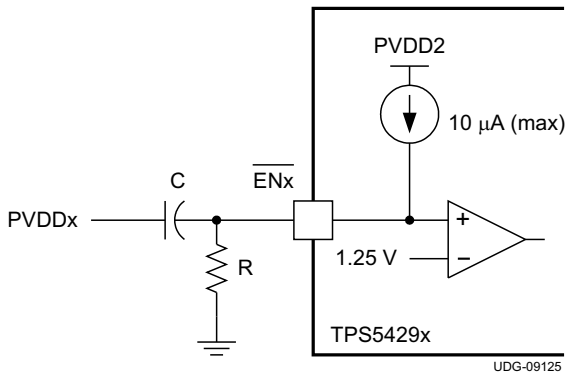

Copyright © 2016, Texas Instruments Incorporated

Figure 11. Start-Up Delay Schematic

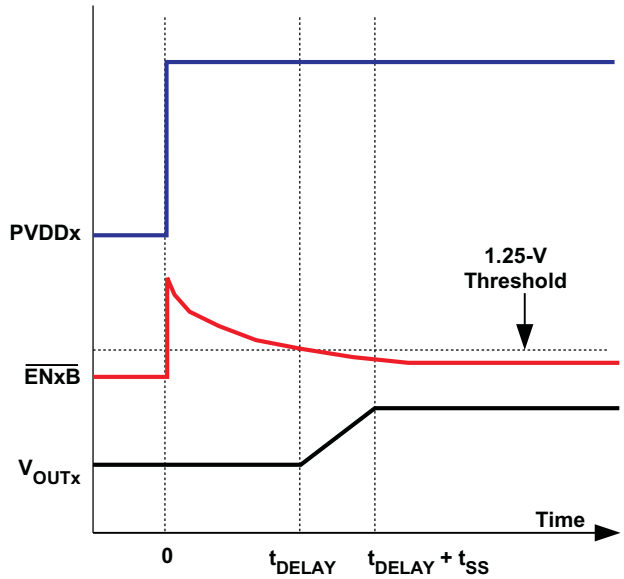

Figure 12. Start-Up Delay Timing Diagram

NOTE

If delayed output voltage start-up is not necessary, simply connect $\overline{EN1}$ and $\overline{EN2}$ to GND. This allows the outputs to *start* immediately on the valid application of PVDD2.

If $\overline{ENx}$ is allowed to go *high* after the Outputx has been in regulation, the upper and lower MOSFETs shut off, and the output decays at a rate determined by the output capacitor and the load.

8.3.5 Soft Start

Each output has a dedicated soft-start circuit. The soft-start voltage is an internal digital reference ramp to one of the two noninverting inputs of the error amplifier. The other input is the internal precise 0.8-V reference. The total ramp time for the FB voltage to charge from 0 V to 0.8 V is about 5.2 ms, 2.6 ms, and 1.3 ms for TPS54190, TPS54191, and TPS54192, respectively. During a soft-start interval, the TPS5429x output slowly increases the voltage to the noninverting input of the error amplifier. In this way, the output voltage slowly ramps up until the voltage on the noninverting input to the error amplifier reaches the internal 0.8-V reference voltage. At that time, the voltage at the noninverting input to the error amplifier remains at the reference voltage.

During the soft-start interval, pulse-by-pulse current limiting is in effect. If an overcurrent pulse is detected, six PWM pulses is skipped to allow the inductor current to decay before another PWM pulse is applied (see *Output Overload Protection*). There is no pulse skipping if a current limit pulse is not detected.

If the rate of rise of the input voltage (PVDDx) is such that the input voltage is too low to support the desired regulation voltage by the time soft start completes, the output $\overline{UV}$ circuit may trip and cause a *hiccup* in the output voltage. In this case, use a timed delay start-up from the $\overline{ENx}$ pin to delay the start-up of the output until the PVDDx voltage has the capability of supporting the desired regulation voltage.

8.3.6 Output Voltage Regulation

The regulation output voltage is determined by a resistor divider connecting the output node, the FBx pin, and GND (Figure 13). The value of the output voltage is shown in Equation 2.

$$V_{OUT} = V_{REF} \times \left(1 + \frac{R1}{R2}\right) (V) \quad (2)$$

where

- V_{REF} is the internal 0.8-V reference voltage

Copyright © 2009–2016, Texas Instruments Incorporated

Feature Description (continued)

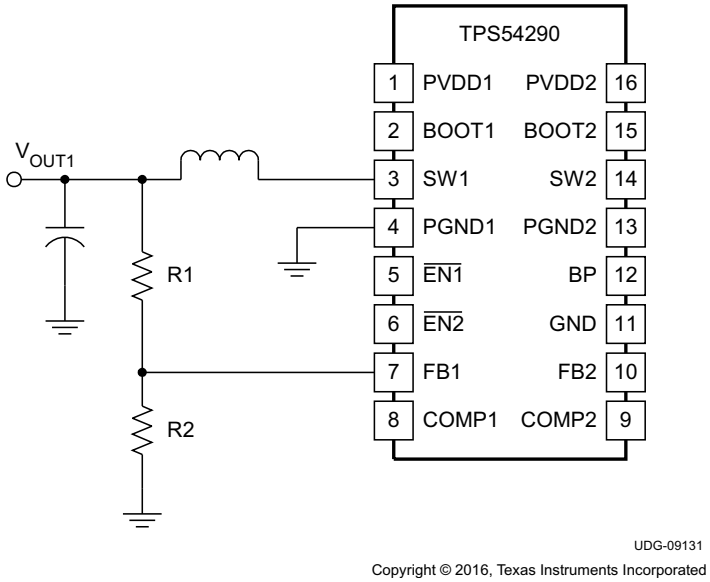

Figure 13. Feedback Network for Channel 1

8.3.7 Inductor Selection

Equation 3 calculates the inductance value so that the output ripple current falls from 20% to 40% of the full load current.

$$L = \frac{V_{IN} - V_{OUT}}{\Delta I_{OUT}} \tag{3}$$

8.3.8 Maximum Output Capacitance

With internal pulse-by-pulse current limiting and a fixed soft-start time, there is a maximum output capacitance which may be used before start-up problems begin to occur. If the output capacitance is large enough so that the device enters a current-limit protection mode during start-up, then there is a possibility that the output never reaches regulation. Instead, the TPS5429x simply shuts down and attempts a restart as if the output were short-circuited to ground. The maximum output capacitance (including bypass capacitance distributed at the load) is given by Equation 4.

$$C_{OUT(max)} = \frac{t_{SS}}{V_{OUT}} \times \left(ILIM - I_{LOAD} - \left(\frac{I_{RIPPLE}}{2} \right) \right) \tag{4}$$

where

- t_{SS} is the soft-start time
- ILIM is the current limit level

8.3.9 Feedback Loop Compensation

In the feedback signal path, the output voltage setting divider is followed by an internal g_M-type error amplifier with a typical transconductance of 325 µS. An external series connected R-C circuit from the g_M amplifier output (COMPx pin) to ground serves as the compensation network for the converter. The signal from the error amplifier output is then buffered and combined with a slope compensation signal before it is mirrored to be referenced to the SW node. Here, it is compared with the current feedback signal to create a pulse-width-modulated (PWM) signal-fed to drive the upper MOSFET switch. A simplified equivalent circuit of the signal control path is depicted in Figure 14.

Feature Description (continued)

NOTE

Noise coupling from the SWx node to internal circuitry of BOOTx may impact narrow pulse width operation, especially at load currents less than 1 A.

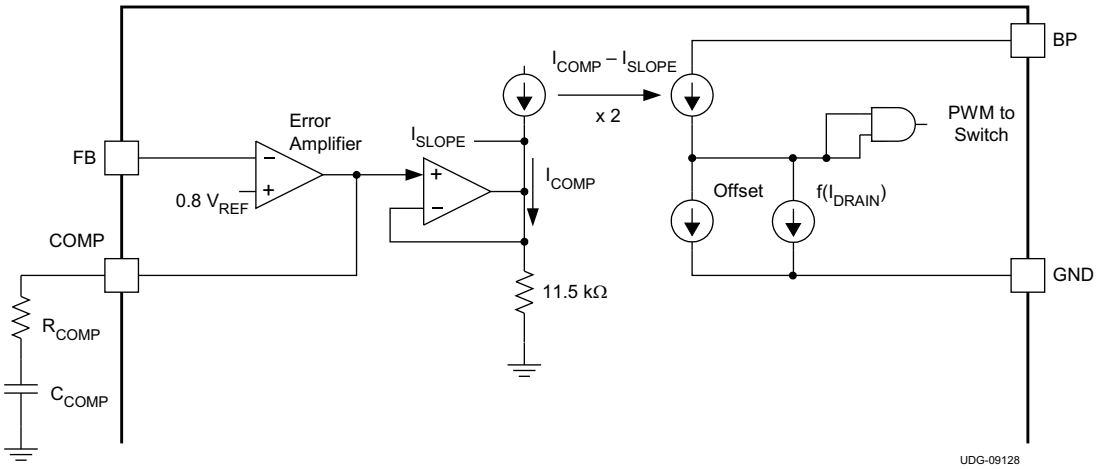

Figure 14. Feedback Loop Equivalent Circuit

A more conventional small-signal equivalent block diagram is shown in Figure 15. Here, the full closed-loop signal path is shown. Because the TPS5429x contains internal slope compensation, the external L-C filter must be selected appropriately so that the resulting control loop meets criteria for stability.

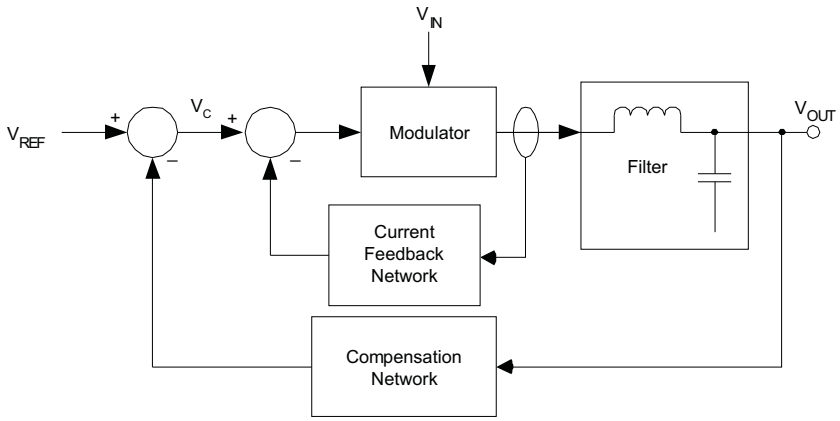

Figure 15. Small Signal Equivalent Block Diagram

To determine the components necessary for compensating the feedback loop, the controller frequency response characteristics must be understood and the desired crossover frequency selected. The best results are obtained if 10% of the switching frequency is used as this closed-loop crossover frequency. In some cases, up to 20% of the switching frequency is also possible.

Copyright © 2009–2016, Texas Instruments Incorporated

Feature Description (continued)

With the output filter components selected, the next step is to calculate the DC gain of the modulator. For TPS5429x, use Equation 5.

$$FM_{TPS5429x} = \frac{f_{SW}}{\left(19.7 \times e^{(K \times t_{ON})} + 95 \times 10^{-6} \times \left(\frac{(V_{IN} - V_{OUT})}{L}\right)\right)}$$

where

- $K = 5.6 \times 10^5$ for TPS54290
- $K = 1.5 \times 10^6$ for TPS54291
- $K = 3.6 \times 10^6$ for TPS54292 (5)

The overall DC gain of the converter control-to-output transfer function is approximated by Equation 6.

$$f_C = \frac{V_{IN} \times FM \times 2 \times 10^{-4}}{\left(1 + \left(\frac{\left(V_{IN} \times FM \times 95 \times 10^{-6}\right)}{2 \times R_{LOAD}}\right)\right)} \quad (6)$$

The next step is to find the desired gain of the error amplifier at the desired crossover frequency. Assuming a single-pole roll-off, use Equation 6 to evaluate Equation 7 at the desired crossover frequency.

$$K_{EA} = -20 \times \log\left(\frac{f_C}{\left(1 + 2 \times \pi \times f_{CO} \times (2 \times R_{LOAD}) \times C_{OUT}\right)}\right)$$

where

- f_{CO} is the desired crossover frequency (7)

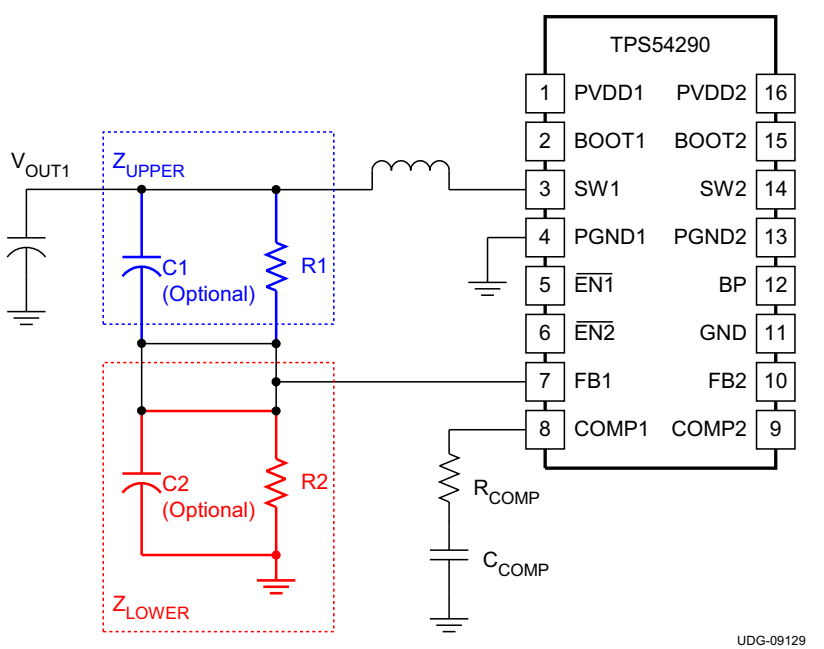

Copyright © 2016, Texas Instruments Incorporated

Figure 16. Loop Compensation Network

Feature Description (continued)

If operating at wide duty cycles (over 50%), a capacitor may be necessary across the upper resistor of the voltage setting divider (see Equation 8). If duty cycles are less than 50%, this capacitor may be omitted.

$$C1 = \frac{\sqrt{L \times C_{OUT}}}{R1} \tag{8}$$

If a high-ESR capacitor is used in the output filter, a zero appears in the loop response that could lead to instability (see Equation 9). To compensate, a small capacitor is placed in parallel with the lower voltage setting divider resistor. The value of the capacitor is determined such that a pole is placed at the same frequency as the ESR zero. If low-ESR capacitors are used, this capacitor may be omitted.

$$C2 = C_{OUT} \times \frac{ESR \times (R1 + R2)}{(R1 \times R2)} \tag{9}$$

Next, calculate the value of the error amplifier gain setting resistor and capacitor using Equation 10 and Equation 11.

$$R_{COMP} = \frac{10^{\frac{KEA}{20}} \times (Z_{LOWER} + Z_{UPPER})}{g_M \times Z_{LOWER}}$$

$$C_{COMP} = \frac{1}{2 \times \pi \times f_{POLE} \times R_{COMP}} \tag{10}$$

where

- $$f_{POLE} = \frac{1}{2 \times \pi \times (2 \times R_{LOAD}) \times C_{OUT}} \tag{11}$$

NOTE

When the filter and compensation component values have been established, laboratory measurements of the physical design must be performed to confirm converter stability.

8.3.10 Bootstrap for N-Channel MOSFET

A bootstrap circuit provides a voltage source higher than the input voltage and of sufficient energy to fully enhance the switching MOSFET each switching cycle. The PWM duty cycle is limited to maximum (that is, 90% for TPS54291) allowing an external bootstrap capacitor to charge through an internal synchronous switch (between BP and BOOTx) during every cycle. When the PWM switch is commanded to turn on, the energy used to drive the MOSFET gate is derived from the voltage on this capacitor.

Because this is a charge transfer circuit, take care in selecting the value of the bootstrap capacitor. It must be sized such that the energy stored in the capacitor on a per cycle basis is greater than the gate charge requirement of the MOSFET being used. Typically a ceramic capacitor with a value from 22 nF to 68 nF is selected for the bootstrap capacitor.

8.3.11 Output Overload Protection

In the event of an overcurrent on either output after the output reaches regulation, pulse-by-pulse current limit is in effect for that output. In addition, an output undervoltage (UV) comparator monitors the FBx voltage (which follows the output voltage) to declare a fault if the output drops below 85% of regulation. During this fault condition, both PWM outputs are disabled. This ensures that both outputs discharge to GND, in the event that overcurrent is on one output while the other is not loaded. The converter enters a hiccup mode timeout before attempting to restart.

If an overcurrent condition exists during soft start, pulse-by-pulse current limiting reduces the pulse width of the affected output's PWM. In addition, if an overcurrent pulse is detected, six clock cycles are skipped before a next PWM pulse is enabled, effectively dividing the PWM frequency by six and preventing excessive current build up in the inductor. At the end of the soft-start time, a UV fault is declared and the operation is the same as described above.

Copyright © 2009–2016, Texas Instruments Incorporated

Feature Description (continued)

The overcurrent threshold for Output1 and Output2 are set nominally 2.2 A and 3.8 A, respectively.

NOTE

Design hint: The *OCP Threshold* refers to the *peak* current in the internal switch. Be sure to add the 1/2 of the peak inductor ripple current to the DC load current in determining how close the actual operating point is to the *OCP Threshold*.

8.3.12 Operating Near Maximum Duty Cycle

If the TPS5429x is operated at maximum duty cycle, and if the input voltage is insufficient to support the output voltage (at full load or during a load current transient) then there is a possibility that the output voltage falls from regulation and trip the output UV comparator. If this must occur, the TPS5429x protection circuitry declares a fault and enters hiccup mode.

NOTE

Design hint: Ensure that under ALL conditions of line and load regulation that there is sufficient duty cycle to maintain output voltage regulation.

8.3.13 Dual-Supply Operation

It is possible to operate a TPS5429x from two supply voltages. If this application is desired, then the sequencing of the supplies must be such that PVDD2 is above the UVLO voltage before PVDD1 begins to rise. This is to ensure the internal regulator and the control circuitry is in operation before PVDD1 supplies energy to the output. In addition, Output1 must be held in the disabled state ($\overline{EN1}$ high) until there is sufficient voltage on PVDD1 to support Output1 in regulation (see *Operating Near Maximum Duty Cycle*).

The preferred sequence of events follows:

1. PVDD2 rises above the input UVLO voltage
2. PVDD1 rises with Output1 disabled until PVDD1 rises above level to support Output1 regulation

With the two conditions above satisfied, there is no restriction on PVDD2 to be greater than, or less than PVDD1.

NOTE

Design hint: An R-C delay on $\overline{EN1}$ may be used to delay the start-up of Output1 for a long enough period of time to ensure PVDD1 can support Output1 load.

8.3.14 Bypassing and Filtering

As with any integrated circuit, supply bypassing is important for jitter-free operation. To improve the noise immunity of the converter, ceramic bypass capacitors must be placed as close to the package as possible.

- PVDD1 to GND: Use a 10-µF ceramic capacitor
- PVDD2 to GND: Use a 10-µF ceramic capacitor
- BP to GND: Use a 4.7-µF ceramic capacitor

8.4 Device Functional Modes

8.4.1 PWM Operation

TPS5429X is a dual-channel synchronous buck converter. Normal operation occurs when V_{IN} is above 4.5 V and the EN1 and EN2 pins pulled low to enable the device.

8.4.2 Standby Operation

TPS5429X can be placed in standby when the EN1 and EN2 pins are set high, disabling the device.

9 Application and Implementation

NOTE

Information in the following applications sections is not part of the TI component specification, and TI does not warrant its accuracy or completeness. TI's customers are responsible for determining suitability of components for their purposes. Customers should validate and test their design implementation to confirm system functionality.

9.1 Application Information

TPS5429X is a synchronous buck converter. It can convert an input voltage of 4.5 V to 18 V to two lower voltages. Channel 1 is rated for 1.5-A output, while Channel 2 is rated for 2.5-A output.

9.2 Typical Applications

9.2.1 TPS54291 Design Example

The following example illustrates the design process and component selection for a 12-V to 5-V or 3.3-V dual non-synchronous buck regulator using the TPS54291 converter.

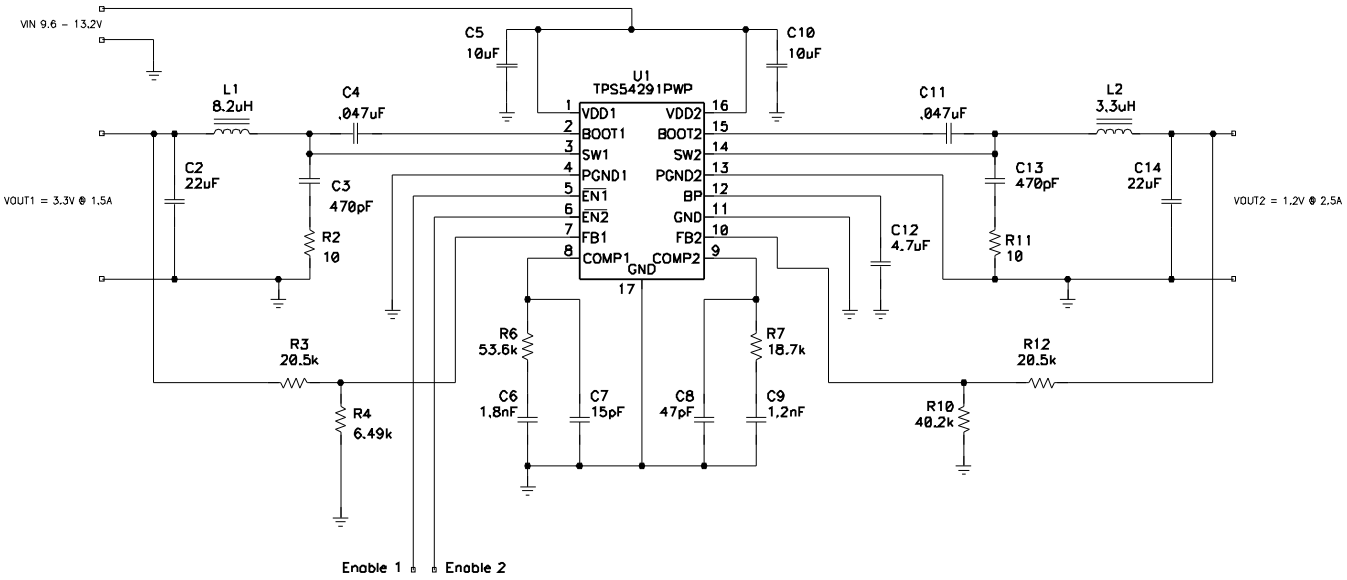

Copyright © 2016, Texas Instruments Incorporated

Figure 17. TPS54291 Design Example 1 Schematic

9.2.1.1 Design Requirements

A definition of symbols used can be found in Table 1. The efficiency, line regulation, and load regulation from printed-circuit boards built using this design are shown in Figure 19 and Figure 20.

Table 1. Design Example Electrical Characteristics

PARAMETER		TEST CONDITIONS	MIN	TYP	MAX	UNIT
INPUT CHARACTERISTICS						
V_{IN}	Input voltage		8	12	14	V
I_{IN}	Input current	V_{IN} = nom, I_{OUT} = max				A
	No load input current	V_{IN} = nom, I_{OUT} = 0 A		12	20	mA
$V_{IN(UVLO)}$	Input UVLO	I_{OUT} = min to max	4	4.2	4.4	V

Copyright © 2009–2016, Texas Instruments Incorporated

Typical Applications (continued)

Table 1. Design Example Electrical Characteristics (continued)

PARAMETER		TEST CONDITIONS	MIN	TYP	MAX	UNIT
OUTPUT CHARACTERISTICS						
V_{OUT1}	Output voltage 1	V_{IN} = nom, I_{OUT} = nom	3.2	3.3	3.4	V
V_{OUT2}	Output voltage 2	V_{IN} = nom, I_{OUT} = nom	1.15	1.2	1.25	V
	Line regulation	VIN = min to max			1%	
	Load regulation	I_{OUT} = min to max			1%	
$V_{OUT1(ripple)}$	Output1 voltage ripple	V_{IN} = nom, I_{OUT1} = max			50	mV_{PP}
$V_{OUT2(ripple)}$	Output2 voltage ripple	V_{IN} = nom, I_{OUT2} = max			24	mV_{PP}
I_{OUT1}	Output current 1	V_{IN} = min to max	0		1.5	A
I_{OUT2}	Output current 2	V_{IN} = min to max	0		2.5	A
I_{OCP1}	Output overcurrent Channel 1	V_{IN} = nom, V_{OUT} = (V_{OUT1} – 5%)	1.8	2.2	2.6	A
I_{OCP2}	Output overcurrent Channel 2	V_{IN} = nom, V_{OUT} = (V_{OUT2} – 5%)	3.2	3.8	4.6	A
TRANSIENT RESPONSE						
ΔV_{OUT}	Change from load transient	ΔI_{OUT} = 1 A at 3 µA/s		200		mV
	Settling time	to 1% of V_{OUT}		1		ms
SYSTEMS CHARACTERISTICS						
f_{SW}	Switching frequency		500	600	700	kHz
η_{PEAK}	Peak efficiency	V_{IN} = nom		90%		
η	Full load efficiency	V_{IN} = nom, I_{OUT} = max		80%		
T_{OP}	Operating temperature	V_{IN} = min to max, I_{OUT} = min to max	0	25	60	°C

9.2.1.2 Detailed Design Procedure

The list of materials for this application is shown below in Table 2.

Table 2. Design Example List of Materials

REFERENCE DESIGNATOR	QTY	VALUE	DESCRIPTION	SIZE	PART NUMBER	MFR
C12	1	4.7 µF	Capacitor, Ceramic, 10 V, X5R, 20%	0805	Std	Std
C2, C14	2	22 µF	Capacitor, Ceramic, 6.3 V, X5R, 20%	1206	C3216X5R0J226M	TDK
C3, C13	2	470 pF	Capacitor, Ceramic, 25 V, X7R, 20%	0603	Std	Std
C4, C11	2	0.047 µF	Capacitor, Ceramic, 25 V, X7R, 20%	0603	Std	Std
C5, C10	2	10 µF	Capacitor, Ceramic, 25 V, X5R, 20%	1210	C3225X5R1E106M	TDK
C6	2	1.8 nF	Capacitor, Ceramic, 25 V, X7R, 20%	0603	Std	Std
C7	1	15 pF	Capacitor, Ceramic, 25 V, X7R, 20%	0603	Std	Std
C8	1	47 pF	Capacitor, Ceramic, 25 V, X7R, 20%	0603	Std	Std
C9	1	1.2 nF	Capacitor, Ceramic, 25 V, X7R, 20%	0603	Std	Std
L1	1	8.2 µH	Inductor, SMT, 4.38 A, 20 mΩ	0.402 × 0.394 inch	MSS1048-822L	Coilcraft
L2	1	3.3 µH	Inductor, SMT, 5.04 A, 10 mΩ	0.402 × 0.394 inch	MSS1048-332L	Coilcraft
R10	1	40.2 kΩ	Resistor, Chip, 1/16W, 1%	0603	Std	Std
R2, R11	2	10 Ω	Resistor, Chip, 1/16W, 5%	0603	Std	Std
R3, R12	2	20.5 kΩ	Resistor, Chip, 1/16W, 1%	0603	Std	Std
R4	1	6.49 kΩ	Resistor, Chip, 1/16W, 1%	0603	Std	Std
R6	1	7.87 kΩ	Resistor, Chip, 1/16W, 1%	0603	Std	Std
R7	1	4.64 kΩ	Resistor, Chip, 1/16W, 1%	0603	Std	Std
U1	1	2.5 A/1.5 A, 600 Hz	Dual Output Fully Synchronous Buck Converter w/Integrated FET	CSP	TPS54291PWP	TI

Copyright © 2009–2016, Texas Instruments Incorporated

9.2.1.2.1 Duty Cycle Estimation

The duty cycle of the main switching FET is estimated by Equation 12 and Equation 13.

$$D_{MAX1} \approx \frac{V_{OUT}}{V_{IN(min)}} = \frac{3.3}{8.0} = 0.413 \longrightarrow D_{MAX2} \approx \frac{V_{OUT}}{V_{IN(min)}} = \frac{1.2}{8.0} = 0.15 \tag{12}$$

$$D_{MIN1} \approx \frac{V_{OUT}}{V_{IN(max)}} = \frac{3.3}{14} = 0.236 \longrightarrow D_{MIN2} \approx \frac{V_{OUT}}{V_{IN(max)}} = \frac{1.2}{14} = 0.086 \tag{13}$$

9.2.1.2.2 Inductor Selection

The peak-to-peak ripple must be limited to between 20% and 30% of the maximum output current (see Equation 14 and Equation 15).

$$I_{Lrip1(max)} = 0.30 \times I_{OUT(max)} = 0.3 \times 1.5\,A = 0.450\,A \tag{14}$$

$$I_{Lrip2(max)} = 0.30 \times I_{OUT(max)} = 0.3 \times 2.5\,A = 0.750\,A \tag{15}$$

The minimum inductor size can be estimated by Equation 16 and Equation 17.

$$L_{MIN1} \approx \frac{V_{IN(max)} - V_{OUT}}{I_{LRIP(max)}} \times D_{MIN} \times \frac{1}{f_{SW}} = \frac{14 - 3.3}{0.45\,A} \times 0.236 \times \frac{1}{600\,kHz} = 9.35\,\mu H \tag{16}$$

$$L_{MIN2} \approx \frac{V_{IN(max)} - V_{OUT}}{I_{LRIP(max)}} \times D_{MIN} \times \frac{1}{f_{SW}} = \frac{14 - 1.2}{0.75\,A} \times 0.086 \times \frac{1}{600\,kHz} = 2.45\,\mu H \tag{17}$$

The standard inductor values of 8.2 µH and 3.3 µH are selected for Channel 1 and Channel 2, respectively. The actual ripple currents are estimated by Equation 18 and Equation 19.

$$I_{RIPPLE1} \approx \frac{V_{IN(max)} - V_{OUT}}{L1} \times D_{MIN} \times \frac{1}{f_{SW}} = \frac{14 - 3.3}{8.2\,\mu H} \times 0.236 \times \frac{1}{600\,kHz} = 0.513\,A \tag{18}$$

$$I_{RIPPLE2} \approx \frac{V_{IN(max)} - V_{OUT}}{L2} \times D_{MIN} \times \frac{1}{f_{SW}} = \frac{14 - 1.2}{3.3\,\mu H} \times 0.086 \times \frac{1}{600\,kHz} = 0.556A \tag{19}$$

The RMS current through the inductor is approximated by Equation 20 and Equation 21.

$$I_{L(rms)} = \sqrt{I_{L(avg)}^2 + \tfrac{1}{12} I_{RIPPLE}^2} \approx \sqrt{I_{OUT(max)}^2 + \tfrac{1}{12} I_{RIPPLE}^2} = \sqrt{(1.5)^2 + \tfrac{1}{12}(0.513)^2}\,A = 1.51A \tag{20}$$

$$I_{L(rms)} = \sqrt{I_{L(avg)}^2 + \tfrac{1}{12} I_{RIPPLE}^2} \approx \sqrt{I_{OUT(max)}^2 + \tfrac{1}{12} I_{RIPPLE}^2} = \sqrt{(2.5)^2 + \tfrac{1}{12}(0.556)^2}\,A = 2.51A \tag{21}$$

A DC current with 30% peak-to-peak ripple has an RMS current approximately 0.4% above the average current.

The peak inductor current is estimated by Equation 22 and Equation 23.

$$I_{L(peak)} \approx I_{OUT(max)} + \tfrac{1}{2} I_{RIPPLE} = 1.5\,A + \tfrac{1}{2}\,0.513A = 1.76\,A \tag{22}$$

$$I_{L(peak)} \approx I_{OUT(max)} + \tfrac{1}{2} I_{RIPPLE} = 2.5\,A + \tfrac{1}{2}\,0.556A = 2.78\,A \tag{23}$$

A 8.2-µH inductor with a minimum RMS current rating of 1.51 A and minimum saturation current rating of 3.7 A must be selected. A Coilcraft MSS1048-822ML 8.2-µH, 4.38-A inductor is chosen for Channel 1 and a Coilcraft MSS1048-332 3.3-µH inductor is chosen for Channel 2.

Copyright © 2009–2016, Texas Instruments Incorporated

9.2.1.2.3 Output Capacitor Selection

Output capacitors are selected to support load transients and output ripple current. The minimum output capacitance to meet the transient specification is given by Equation 24 and Equation 25.

$$C_{OUT1(min)} = \frac{I_{TRAN(max)}^2 \times L}{(V_{OUT}) \times V_{OVER}} = \frac{1A^2 \times 8.2\mu H}{3.3V \times 0.2V} = 12.4\mu F \tag{24}$$

$$C_{OUT2(min)} = \frac{I_{TRAN(max)}^2 \times L}{(V_{OUT}) \times V_{OVER}} = \frac{1A^2 \times 3.3\mu H}{1.2V \times 0.2V} = 13.7\mu F \tag{25}$$

The maximum ESR to meet the ripple specification is given by Equation 26 and Equation 27.

$$ESR_{MAX} = \frac{V_{RIPPLE(total)} - \left(\frac{I_{RIPPLE}}{8 \times C_{OUT} \times f_{SW}}\right)}{I_{RIPPLE}} = \frac{0.050V - \left(\frac{0.513A}{8 \times 12.4\mu F \times 600kHz}\right)}{0.513A} = 0.081\Omega \tag{26}$$

$$ESR_{MAX} = \frac{V_{RIPPLE(total)} - \left(\frac{I_{RIPPLE}}{8 \times C_{OUT} \times f_{SW}}\right)}{I_{RIPPLE}} = \frac{0.024V - \left(\frac{0.556A}{8 \times 13.7\mu F \times 600kHz}\right)}{0.556A} = 0.028\Omega \tag{27}$$

A single 22-µF ceramic capacitor with approximately 2.5 mΩ of ESR is selected to provide sufficient margin for capacitance loss due to DC voltage bias.

9.2.1.2.4 Input Capacitor Selection

A minimum 10-µF ceramic input capacitor on each PVDD pin is recommended. The ceramic capacitor must handle the RMS ripple current in the input capacitor.

The RMS current in the input capacitors is estimated by Equation 28 and Equation 29.

$$I_{RMS(CIN1)} = I_{OUT1} \times \sqrt{D_1 \times (1 - D_1)} = 1.5A \times \sqrt{0.413 \times (1 - 0.413)} = 0.74A \tag{28}$$

$$I_{RMS(CIN2)} = I_{OUT1} \times \sqrt{D_2 \times (1 - D_2)} = 2.5A \times \sqrt{0.15 \times (1 - 0.15)} = 0.89A \tag{29}$$

One 1210 10-µF, 25-V, X5R, ceramic capacitor with 2-mΩ ESR and a 2-A RMS current rating are selected for each PVDD input. Higher voltage capacitors are selected to minimize capacitance loss at the DC bias voltage to ensure the capacitors have sufficient capacitance at the working voltage.

9.2.1.2.5 Feedback

The primary feedback divider resistor (R_{FB}) from VOUT to FB must be selected between 10-kΩ and 100-kΩ to maintain a balance between power dissipation and noise sensitivity. For a 3.3-V and 5-V output, 20.5 kΩ is selected and the lower resistor is given by Equation 30.

$$R_{BIAS} = \frac{V_{FB} \times R_{FB}}{V_{OUT} - V_{FB}} \tag{30}$$

For R_{FB} = 20.5 kΩ and V_{FB} = 0.8 V, R_{BIAS} = 6.56 kΩ and 41.0 kΩ (6.49 kΩ and 40.2 kΩ selected) for 3.3 V and 1.2 V, respectively. It is common to select the next lower available resistor value for the bias resistor. This biases the nominal output voltage slightly higher, allowing additional tolerance for load regulation.

9.2.1.2.6 Compensation Components

The TPS54291 controller uses a transconductance error amplifier, which is compensated with a series capacitor and resistor to ground plus a high-frequency capacitor to reduce the gain at high frequency. To select the component, Equation 31 to Equation 33 define the control loop and power stage gain and transfer function.

$$FM_{TPS5429x} = \frac{f_{SW}}{\left[19.7 \times e^{(K \times t_{ON})} + 95 \times 10^{-6} \times \left(\frac{V_{IN} - V_{OUT}}{L}\right)\right]} = \frac{600kHz}{\left[19.7 \times e^{(1.5 \times 10^6 \times 393ns)} + 95 \times 10^{-6} \times \left(\frac{14 - 3.3}{8.2\mu H}\right)\right]} = 3762$$

where

- $K = 5.6 \times 10^5$ for TPS54290
- $K = 1.5 \times 10^6$ for TPS54291
- $K = 3.6 \times 10^6$ for TPS54292 (31)

The overall DC gain of the converter control-to-output transfer function is approximated by Equation 32.

$$f_C = \frac{V_{IN} \times FM \times 2 \times 10^{-4}}{\left[1 + \left(\frac{V_{IN} \times FM \times 95 \times 10^{-6}}{2 \times R_{LOAD}}\right)\right]} = \frac{14\,V \times 3762 \times 2 \times 10^{-4}}{\left[1 + \left(\frac{14\,V \times 3762 \times 95 \times 10^{-6}}{4.4\,\Omega}\right)\right]} = 4.293 \tag{32}$$

With the power stage DC gain, it is possible to estimate the required mid-band gain to program a desired crossover frequency.

$$K_{EA} = -20 \times \log\left(\frac{f_C}{1 + 2 \times \pi \times f_{CO} \times (2 \times R_{LOAD}) \times C_{OUT}}\right) = -20 \times \log\left(\frac{3.22}{1 + 2 \times \pi \times 30\,kHz \times 4.4\,\Omega \times 22\,\mu F}\right) = 11.83\,dB \tag{33}$$

9.2.1.2.7 Compensation Gain Setting Resistor

R_{COMP} programs the mid-band error amplifier gain to set the desired crossover frequency in Equation 34.

$$R_{COMP} = \frac{10^{\frac{KEA}{20}} \times (Z_{LOWER} + Z_{UPPER})}{g_M \times Z_{LOWER}} = \frac{10^{\frac{11.83dB}{20}} \times (6.49\,k\Omega + 20.5\,k\Omega)}{325\,\mu S \times 6.49\,k\Omega} = 50.42\,k\Omega \approx 53.6\,k\Omega \tag{34}$$

9.2.1.2.8 Compensation Integrator Capacitor

An integrator capacitor provides maximum DC gain for the best possible DC regulation while programming the compensation zero to match the natural pole of the output filter (see Equation 35). C_{COMP} is selected by Equation 36.

$$f_{POLE} = \frac{1}{2 \times \pi \times R_{LOAD} \times C_{OUT}} = \frac{1}{2 \times \pi \times 4.4\,\Omega \times 22\,\mu F} = 1.644\,kHz \tag{35}$$

$$C_{COMP} = \frac{1}{2 \times \pi \times f_{POLE} \times R_{COMP}} = \frac{1}{2 \times \pi \times 1.644\,kHz \times 53.6\,k\Omega} = 1.80\,nF \tag{36}$$

9.2.1.2.9 Bootstrap Capacitor

To ensure proper charging of the high-side FET gate and limit the ripple voltage on the boost capacitor, a 47-nF boot strap capacitor is recommended.

9.2.1.2.10 Power Dissipation

The power dissipation in the TPS54291 is made from FET conduction losses, switching losses and regulator losses.

Conduction losses are estimated by Equation 37 and Equation 38.

$$P_{CON1} = \left(R_{DS(on)HS} \times D_1 + R_{DS(on)LS} \times (1 - D_1)\right) \times \left(I_{SW1(RMS)}\right)^2 = (150\,m\Omega \times 0.413 + 100\,m\Omega \times 0.587) \times (1.51)^2 = 0.275\,W \tag{37}$$

$$P_{CON2} = \left(R_{DS(on)HS} \times D_1 + R_{DS(on)LS} \times (1 - D_1)\right) \times \left(I_{SW1(RMS)}\right)^2 = (105\,m\Omega \times 0.15 + 75\,m\Omega \times 0.85) \times (2.51)^2 = 0.501\,W \tag{38}$$

The switching losses are estimated by Equation 39 and Equation 40.

$$P_{SW1} \approx \frac{V_{IN(max)}^2 \times (C_{OSS(HS)} + C_{OSS(LS)}) \times f_{SW}}{2} = \frac{14^2 \times (140\,pF + 200\,pF) \times 600\,kHz}{2} = 20\,mW \tag{39}$$

Copyright © 2009–2016, Texas Instruments Incorporated

$$P_{SW2} \approx \frac{V_{IN(max)}^2 \times (C_{OSS(HS)} + C_{OSS(LS)}) \times f_{SW}}{2} = \frac{14^2 \times (200\,pF + 280\,pF) \times 600\,kHz}{2} = 28\,mW \quad (40)$$

The regulator losses are estimated by Equation 41.

$$P_{REG} \approx I_{DD} \times V_{IN(max)} + I_{BP} \times \left(V_{IN(max)} - V_{BP}\right) = 10\,mA \times 14\,V = 140\,mW \quad (41)$$

Total power dissipation in the device is the sum of conduction losses and switching losses for both channels plus regulator losses, which is estimated to be 1.01 W.

9.2.1.3 Application Curves

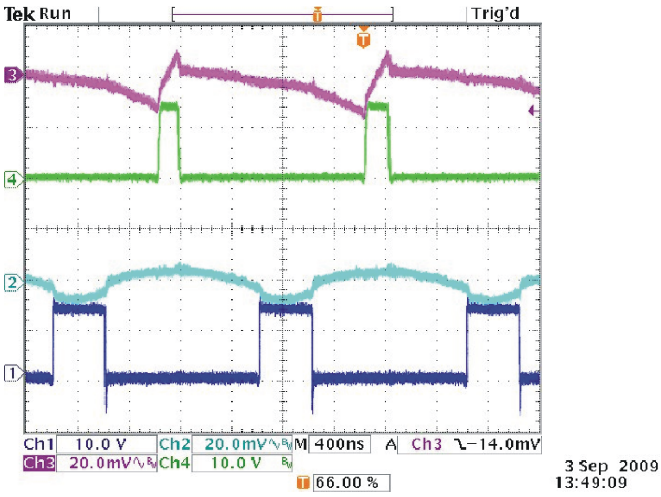

Figure 18. TPS54291 Design Example Switching Waveforms

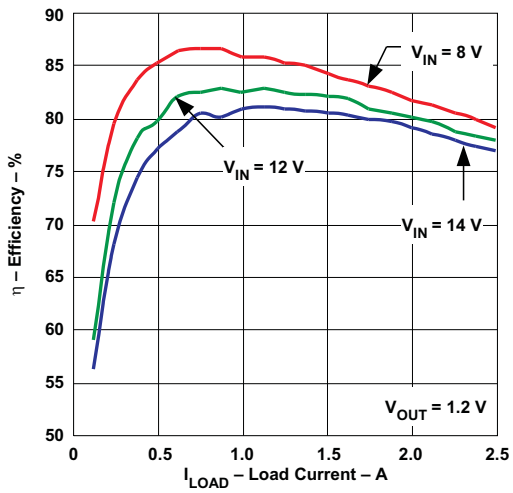

Figure 19. Design Efficiency for 1.2-V Output

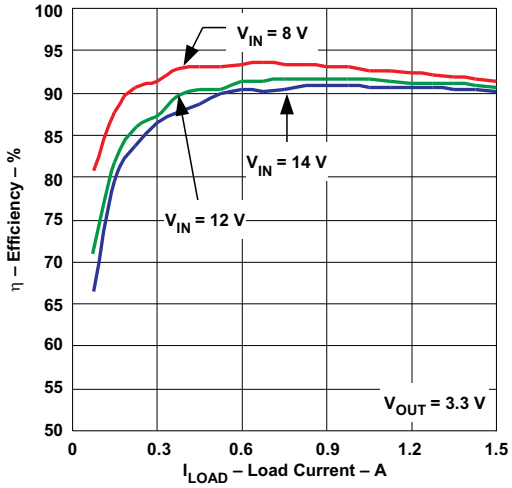

Figure 20. Design Efficiency for 3.3-V Output

9.2.2 TPS54290 Cascaded Design Example

TPS5429x can be configured as cascaded operation as shown in Figure 21. The 12-V input supply is applied to PVDD2 and the Channel 2 output is tied to PVDD1. The Channel 2 output is 3.3 V and capable of supporting 1.5 A to the load while generating power for the 1.2-V input for Channel 1.

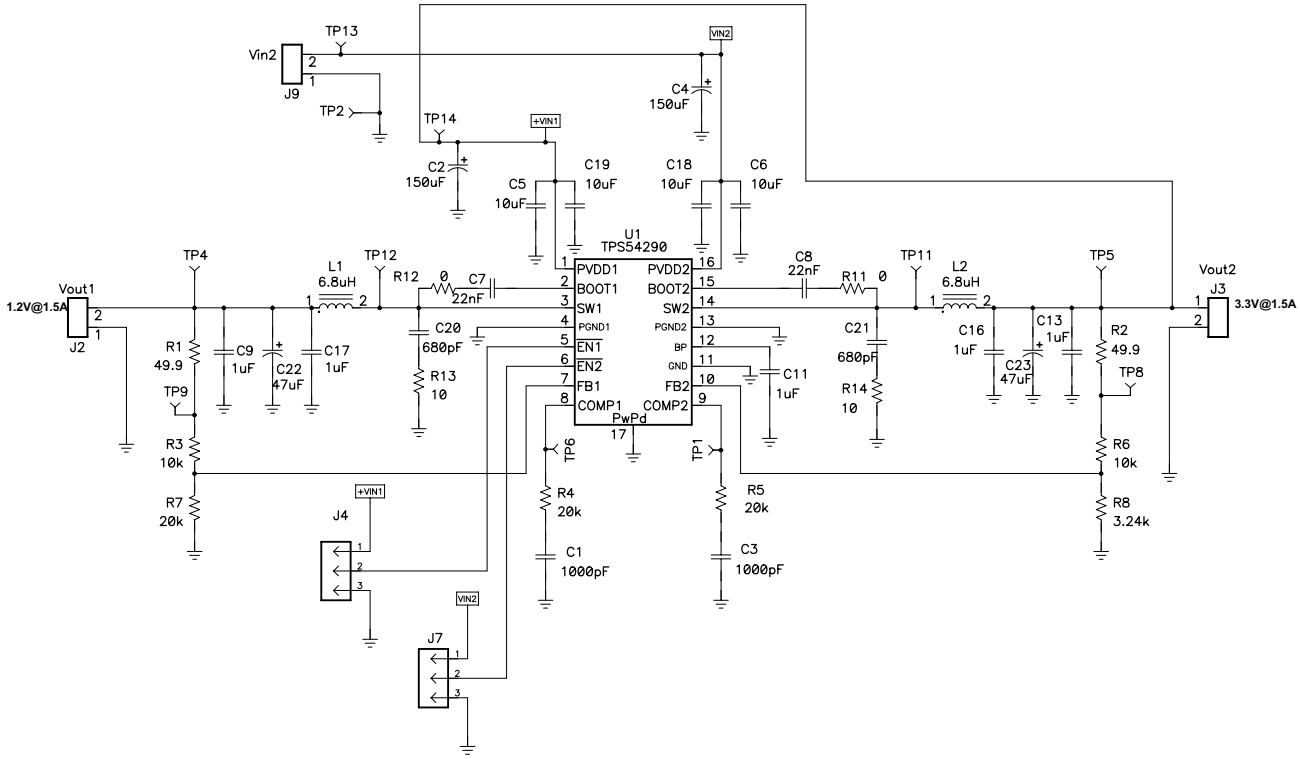

Copyright © 2016, Texas Instruments Incorporated

Figure 21. Cascading Operation

9.2.2.1 Application Curves

For Figure 22: Channel 1 is a 12-V supply, Channel 2 is V_{OUT1} (1.2 V), and Channel 3 is V_{OUT2}(3.3 V).

For Figure 23: Channel 1 is Channel 1 SW node and Channel 2 is Channel 1 output ripple; Channel 3 is Channel 2 output ripple and Channel 2 is Channel 2 SW node.

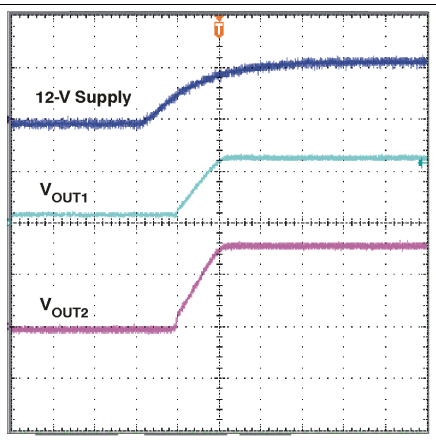

t – Time

Figure 22. Start-Up Waveforms

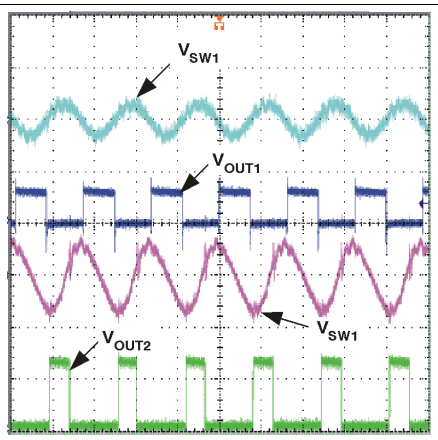

t – Time

Figure 23. Output Ripple and SW Nodes

Copyright © 2009–2016, Texas Instruments Incorporated

10 Power Supply Recommendations

The device is designed to operate from an input-voltage supply range between 4.5 V and 18 V. This input supply must be well regulated. If the input supply is placed more than a few inches from the converter, additional bulk capacitance may be required in addition to the ceramic bypass capacitors. An electrolytic capacitor with a value of 100 µF is a typical choice.

11 Layout

11.1 Layout Guidelines

- The PowerPAD™ must be connected to the low-current ground with available surface copper to dissipate heat. TI recommends extending the ground land beyond the device package area between PVDD1 (pin 1) and PVDD2 (pin 16) and between COMP1 (pin 8) and COMP2(pin 9).
- Connect PGND1 and PGND2 to the PowerPAD™ through a 10-mil wide trace.
- Place the ceramic input capacitors near PVDD1 and PVDD2 and bypass to PGND1 and PGND2, respectively.
- Place the inductor near the SW1 or SW2 pin.
- Connect the output capacitor grounds to PGND1 or PGND2 with wide, tight loops.
- Use a wide ground connection from input capacitor PGND1 or PGND2 as close to power path as possible. TI recommends that they be placed directly underneath.
- Place the bootstrap capacitor near the BOOT pin to minimize gate drive loop.
- Place the feedback and compensation components far from switch node and input capacitor ground connection.
- Place the snubber components from SW1 or SW2 to PGND1 or PGND2 close to the device, minimizing the loop area.
- Place the BP bypass capacitor very close to device and bypass to PowerPAD™. Place output ceramic capacitor close to inductor output terminal and between inductor and electrolytic capacitors if used.

11.1.1 PowerPAD™ Package

The PowerPAD™ package provides low thermal impedance for heat removal from the device. The PowerPAD™ derives its name and low thermal impedance from the large bonding pad on the bottom of the device. The circuit board must have an area of solder-tinned-copper underneath the package. The dimensions of this area depend on the size of the PowerPAD™ package. Thermal vias connect this area to internal or external copper planes and must have a drill diameter sufficiently small so that the via hole is effectively plugged when the barrel of the via is plated with copper. This plug is required to prevent wicking the solder away from the interface between the package body and the solder-tinned area under the device during solder reflow. Drill diameters of 0.33 mm (13 mils) works well when 1-oz. copper is plated at the surface of the board while simultaneously plating the barrel of the via. If the thermal vias are not plugged when the copper plating is performed, then a solder mask material must be used to cap the vias with a diameter equal to the via diameter of 0.1 mm minimum. This capping prevents the solder from being wicked through the thermal vias and potentially creating a solder void under the package (see *Related Documentation*).

Copyright © 2009–2016, Texas Instruments Incorporated

11.2 Layout Examples

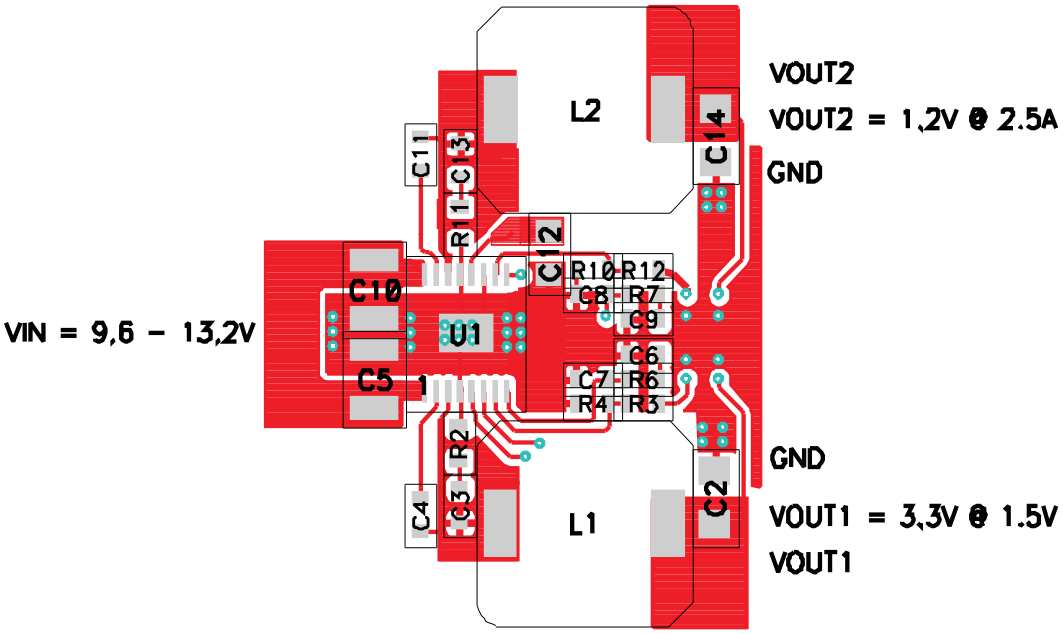

Figure 24. Top Layer

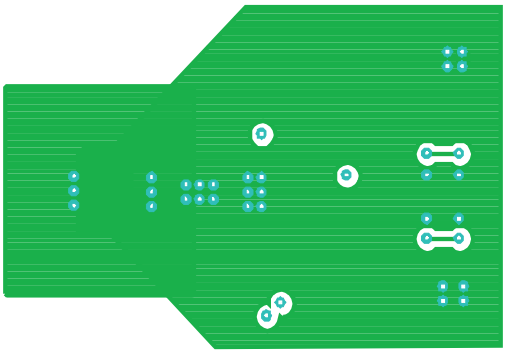

Figure 25. Bottom Layer

Copyright © 2009–2016, Texas Instruments Incorporated

11.3 Overtemperature Protection and Junction Temperature Rise

The overtemperature thermal protection limits the maximum power to be dissipated at a given operating ambient temperature. In other words, at a given device power dissipation, the maximum ambient operating temperature is limited by the maximum allowable junction operating temperature. The device junction temperature is a function of power dissipation, and the thermal impedance from the junction to the ambient. If the internal die temperature must reach the thermal shutdown level, the TPS5429x shuts off both PWMs and remain in this state until the die temperature drops below 125°C, at which time the device restarts.

The first step in determining the device junction temperature is to calculate the power dissipation. The power dissipation is dominated by the two switching MOSFETs and the BP internal regulator. The power dissipated by each MOSFET is composed of conduction losses and switching losses. The total conduction loss in the high-side and low-side MOSFETs for each channel is given by Equation 42.

$$P_{D(cond)} = \left(R_{DS(on)HS} \times D + R_{DS(on)LS} \times (1 - D)\right) \times \left(I_O^2 + \frac{\Delta I_O^2}{12}\right)$$

where

- I_O is the DC output current,
- ΔI_O is the peak-to-peak ripple current in the inductor (42)

Notice the impact of operating duty cycle on the result.

The switching loss for each channel is approximated by Equation 43.

$$P_{D(SW)} = \frac{V_{IN}^2 \times \left(C_{OSS}(HS) + C_{OSS}(LS)\right) \times f_S}{2}$$

where

- $C_{OSS}(HS)$ is the output capacitance of the high-side MOSFET
- $C_{OSS}(LS)$ is the output capacitance of the low-side MOSFET
- f_S is the switching frequency (43)

The total power dissipation is found by summing the power loss for both MOSFETs plus the loss in the internal regulator (see Equation 44).

$$P_D = P_{D(cond)output1} + P_{D(SW)output1} + P_{D(cond)output2} + P_{D(SW)output2} + V_{IN} \times Iq \quad (44)$$

The temperature rise of the device junction is dependent on the thermal impedance from junction to the mounting pad, plus the thermal impedance from the thermal pad to ambient. The thermal impedance from the thermal pad to ambient is dependent on the PCB layout (PowerPAD™ interface to the PCB, the exposed pad area) and airflow (if any; see *Related Documentation* for more information).

The operating junction temperature is shown in Equation 45.

$$T_J = T_A + P_D \times \left(\theta_{TH(pkg)} + \theta_{TH(pad-amb)}\right)$$

where

- θ_{TH} is the thermal impedance (45)

11.4 Power Derating

The TPS5429x delivers full current at wide duty cycles at ambient temperatures up to 85°C if the thermal impedance from the thermal pad is sufficient to maintain the junction temperature below the thermal shutdown level. At higher ambient temperatures, the device power dissipation must be reduced to maintain the junction temperature at or below the thermal shutdown level. Figure 26 illustrates the power derating for elevated ambient temperature under various air flow conditions. Note that these curves assume the PowerPAD™ is soldered to the recommended thermal pad. See *Related Documentation* for further information.

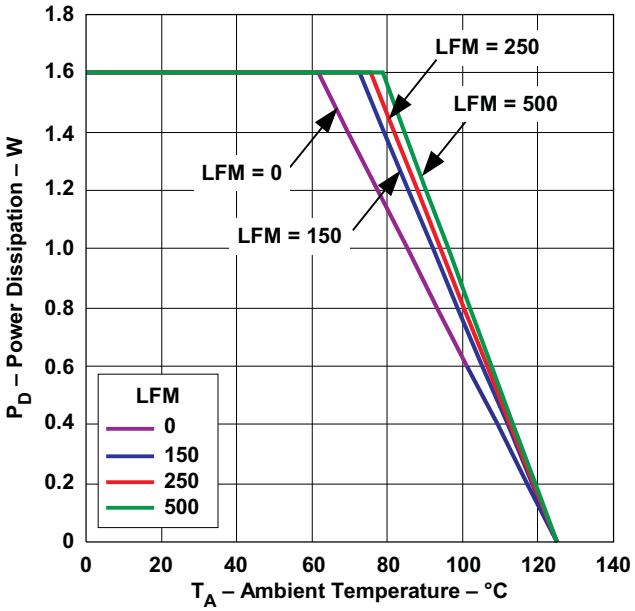

Figure 26. Power Derating Curves

Copyright © 2009–2016, Texas Instruments Incorporated

12 Device and Documentation Support

12.1 Documentation Support

12.1.1 Related Documentation

These references, including design software, design tools, and links to additional references, may be found at www.power.ti.com.

- *Under The Hood Of Low Voltage DC/DC Converters* (SLUP206)
- *Understanding Buck Power Stages in Switchmode Power Supplies* (SLVA057)
- *Designing Stable Control Loops* (SLUP173)
- Additional PowerPAD™ information may be found in:
  - *PowerPAD™ Thermally Enhanced Package* (SLMA002)
  - *PowerPAD™ Made Easy* (SLMA004)

12.2 Related Links

The table below lists quick access links. Categories include technical documents, support and community resources, tools and software, and quick access to sample or buy.

Table 3. Related Links

PARTS	PRODUCT FOLDER	SAMPLE & BUY	TECHNICAL DOCUMENTS	TOOLS & SOFTWARE	SUPPORT & COMMUNITY
TPS54290	Click here	Click here	Click here	Click here	Click here
TPS54291	Click here	Click here	Click here	Click here	Click here
TPS54292	Click here	Click here	Click here	Click here	Click here

12.3 Receiving Notification of Documentation Updates

To receive notification of documentation updates, navigate to the device product folder on ti.com. In the upper right corner, click on *Alert me* to register and receive a weekly digest of any product information that has changed. For change details, review the revision history included in any revised document.

12.4 Community Resources

The following links connect to TI community resources. Linked contents are provided "AS IS" by the respective contributors. They do not constitute TI specifications and do not necessarily reflect TI's views; see TI's Terms of Use.

TI E2E™ Online Community ***TI's Engineer-to-Engineer (E2E) Community.*** Created to foster collaboration among engineers. At e2e.ti.com, you can ask questions, share knowledge, explore ideas and help solve problems with fellow engineers.

Design Support ***TI's Design Support*** Quickly find helpful E2E forums along with design support tools and contact information for technical support.

12.5 Trademarks

PowerPAD, E2E are trademarks of Texas Instruments.
All other trademarks are the property of their respective owners.

12.6 Electrostatic Discharge Caution

These devices have limited built-in ESD protection. The leads should be shorted together or the device placed in conductive foam during storage or handling to prevent electrostatic damage to the MOS gates.

12.7 Glossary

SLYZ022 — *TI Glossary*.

This glossary lists and explains terms, acronyms, and definitions.

13 Mechanical, Packaging, and Orderable Information

The following pages include mechanical, packaging, and orderable information. This information is the most current data available for the designated devices. This data is subject to change without notice and revision of this document. For browser-based versions of this data sheet, refer to the left-hand navigation.

Copyright © 2009–2016, Texas Instruments Incorporated

PACKAGING INFORMATION

Orderable part number	Status (1)	Material type (2)	Package | Pins	Package qty | Carrier	RoHS (3)	Lead finish/ Ball material (4)	MSL rating/ Peak reflow (5)	Op temp (°C)	Part marking (6)
TPS54290PWP	Active	Production	HTSSOP (PWP) | 16	90 | TUBE	Yes	NIPDAU	Level-2-260C-1 YEAR	-40 to 145	54290
TPS54290PWP.A	Active	Production	HTSSOP (PWP) | 16	90 | TUBE	Yes	NIPDAU	Level-2-260C-1 YEAR	-40 to 145	54290
TPS54290PWPR	Active	Production	HTSSOP (PWP) | 16	2000 | LARGE T&R	Yes	NIPDAU	Level-2-260C-1 YEAR	-40 to 145	54290
TPS54290PWPR.A	Active	Production	HTSSOP (PWP) | 16	2000 | LARGE T&R	Yes	NIPDAU	Level-2-260C-1 YEAR	-40 to 145	54290
TPS54291PWP	Active	Production	HTSSOP (PWP) | 16	90 | TUBE	Yes	NIPDAU	Level-2-260C-1 YEAR	-40 to 145	54291
TPS54291PWP.A	Active	Production	HTSSOP (PWP) | 16	90 | TUBE	Yes	NIPDAU	Level-2-260C-1 YEAR	-40 to 145	54291
TPS54291PWPR	Active	Production	HTSSOP (PWP) | 16	2000 | LARGE T&R	Yes	NIPDAU	Level-2-260C-1 YEAR	-40 to 145	54291
TPS54291PWPR.A	Active	Production	HTSSOP (PWP) | 16	2000 | LARGE T&R	Yes	NIPDAU	Level-2-260C-1 YEAR	-40 to 145	54291
TPS54291PWPRG4	Active	Production	HTSSOP (PWP) | 16	2000 | LARGE T&R	Yes	NIPDAU	Level-2-260C-1 YEAR	-40 to 145	54291
TPS54291PWPRG4.A	Active	Production	HTSSOP (PWP) | 16	2000 | LARGE T&R	Yes	NIPDAU	Level-2-260C-1 YEAR	-40 to 145	54291
TPS54292PWP	Active	Production	HTSSOP (PWP) | 16	90 | TUBE	Yes	NIPDAU	Level-2-260C-1 YEAR	-40 to 145	54292
TPS54292PWP.A	Active	Production	HTSSOP (PWP) | 16	90 | TUBE	Yes	NIPDAU	Level-2-260C-1 YEAR	-40 to 145	54292
TPS54292PWPR	Active	Production	HTSSOP (PWP) | 16	2000 | LARGE T&R	Yes	NIPDAU	Level-2-260C-1 YEAR	-40 to 145	54292
TPS54292PWPR.A	Active	Production	HTSSOP (PWP) | 16	2000 | LARGE T&R	Yes	NIPDAU	Level-2-260C-1 YEAR	-40 to 145	54292
TPS54292PWPRG4	Active	Production	HTSSOP (PWP) | 16	2000 | LARGE T&R	Yes	NIPDAU	Level-2-260C-1 YEAR	-40 to 145	54292
TPS54292PWPRG4.A	Active	Production	HTSSOP (PWP) | 16	2000 | LARGE T&R	Yes	NIPDAU	Level-2-260C-1 YEAR	-40 to 145	54292

(1) **Status:** For more details on status, see our product life cycle.

(2) **Material type:** When designated, preproduction parts are prototypes/experimental devices, and are not yet approved or released for full production. Testing and final process, including without limitation quality assurance, reliability performance testing, and/or process qualification, may not yet be complete, and this item is subject to further changes or possible discontinuation. If available for ordering, purchases will be subject to an additional waiver at checkout, and are intended for early internal evaluation purposes only. These items are sold without warranties of any kind.

(3) **RoHS values:** Yes, No, RoHS Exempt. See the TI RoHS Statement for additional information and value definition.

(4) **Lead finish/Ball material:** Parts may have multiple material finish options. Finish options are separated by a vertical ruled line. Lead finish/Ball material values may wrap to two lines if the finish value exceeds the maximum column width.

(5) **MSL rating/Peak reflow:** The moisture sensitivity level ratings and peak solder (reflow) temperatures. In the event that a part has multiple moisture sensitivity ratings, only the lowest level per JEDEC standards is shown. Refer to the shipping label for the actual reflow temperature that will be used to mount the part to the printed circuit board.

(6) **Part marking:** There may be an additional marking, which relates to the logo, the lot trace code information, or the environmental category of the part.

Multiple part markings will be inside parentheses. Only one part marking contained in parentheses and separated by a "~" will appear on a part. If a line is indented then it is a continuation of the previous line and the two combined represent the entire part marking for that device.

Important Information and Disclaimer: The information provided on this page represents TI's knowledge and belief as of the date that it is provided. TI bases its knowledge and belief on information provided by third parties, and makes no representation or warranty as to the accuracy of such information. Efforts are underway to better integrate information from third parties. TI has taken and continues to take reasonable steps to provide representative and accurate information but may not have conducted destructive testing or chemical analysis on incoming materials and chemicals. TI and TI suppliers consider certain information to be proprietary, and thus CAS numbers and other limited information may not be available for release.

In no event shall TI's liability arising out of such information exceed the total purchase price of the TI part(s) at issue in this document sold by TI to Customer on an annual basis.

TAPE AND REEL INFORMATION

REEL DIMENSIONS

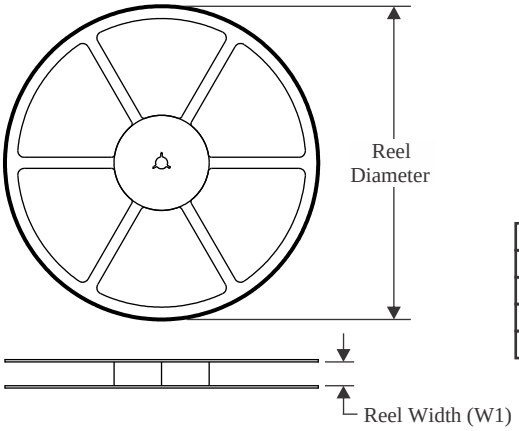

TAPE DIMENSIONS

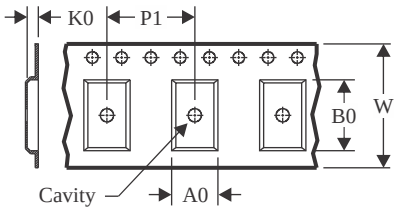

A0	Dimension designed to accommodate the component width
B0	Dimension designed to accommodate the component length
K0	Dimension designed to accommodate the component thickness
W	Overall width of the carrier tape
P1	Pitch between successive cavity centers

QUADRANT ASSIGNMENTS FOR PIN 1 ORIENTATION IN TAPE

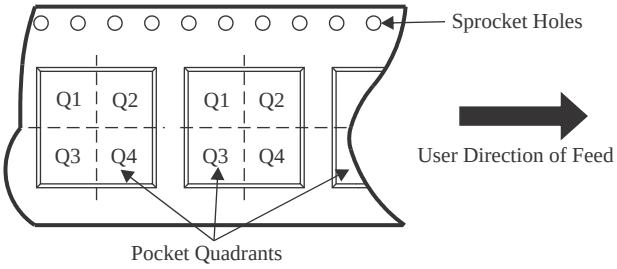

*All dimensions are nominal

Device	Package Type	Package Drawing	Pins	SPQ	Reel Diameter (mm)	Reel Width W1 (mm)	A0 (mm)	B0 (mm)	K0 (mm)	P1 (mm)	W (mm)	Pin1 Quadrant
TPS54290PWPR	HTSSOP	PWP	16	2000	330.0	12.4	6.9	5.6	1.6	8.0	12.0	Q1
TPS54291PWPR	HTSSOP	PWP	16	2000	330.0	12.4	6.9	5.6	1.6	8.0	12.0	Q1
TPS54292PWPR	HTSSOP	PWP	16	2000	330.0	12.4	6.9	5.6	1.6	8.0	12.0	Q1

TAPE AND REEL BOX DIMENSIONS

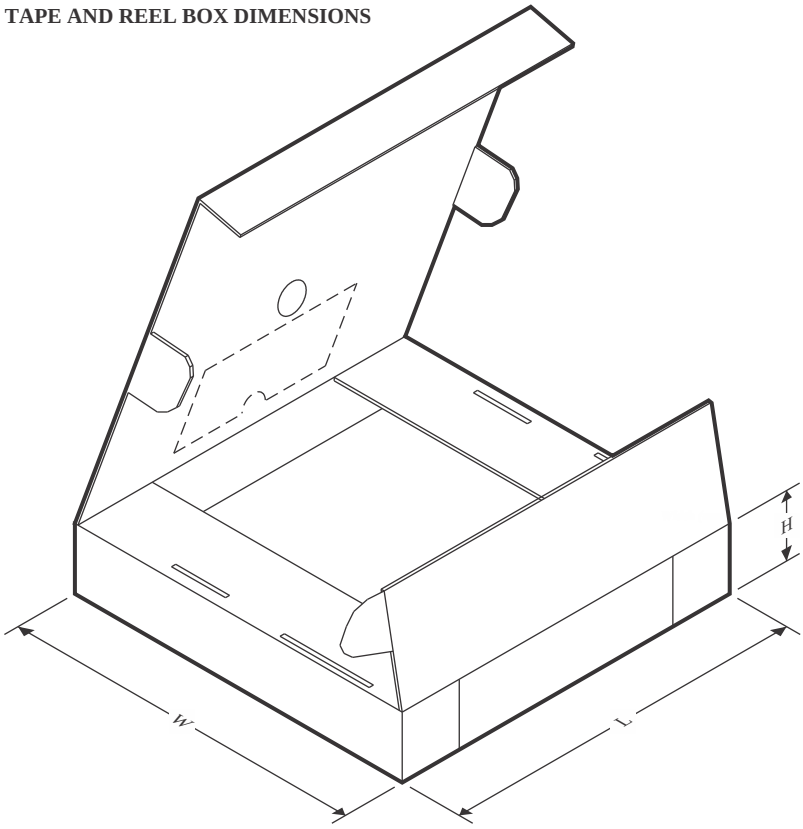

*All dimensions are nominal

Device	Package Type	Package Drawing	Pins	SPQ	Length (mm)	Width (mm)	Height (mm)
TPS54290PWPR	HTSSOP	PWP	16	2000	350.0	350.0	43.0
TPS54291PWPR	HTSSOP	PWP	16	2000	350.0	350.0	43.0
TPS54292PWPR	HTSSOP	PWP	16	2000	350.0	350.0	43.0

TUBE

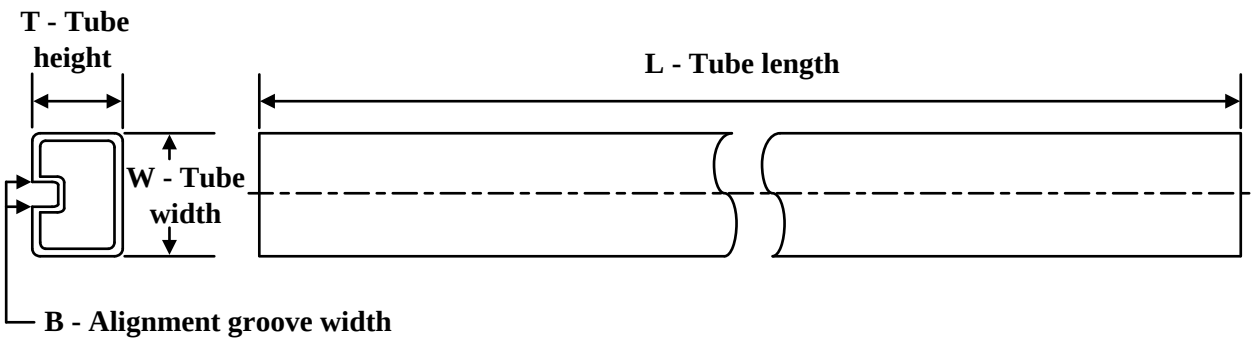

*All dimensions are nominal

Device	Package Name	Package Type	Pins	SPQ	L (mm)	W (mm)	T (µm)	B (mm)
TPS54290PWP	PWP	HTSSOP	16	90	530	10.2	3600	3.5
TPS54290PWP.A	PWP	HTSSOP	16	90	530	10.2	3600	3.5
TPS54291PWP	PWP	HTSSOP	16	90	530	10.2	3600	3.5
TPS54291PWP.A	PWP	HTSSOP	16	90	530	10.2	3600	3.5
TPS54292PWP	PWP	HTSSOP	16	90	530	10.2	3600	3.5
TPS54292PWP.A	PWP	HTSSOP	16	90	530	10.2	3600	3.5

PWP 16 PowerPAD™ TSSOP - 1.2 mm max height

PLASTIC SMALL OUTLINE

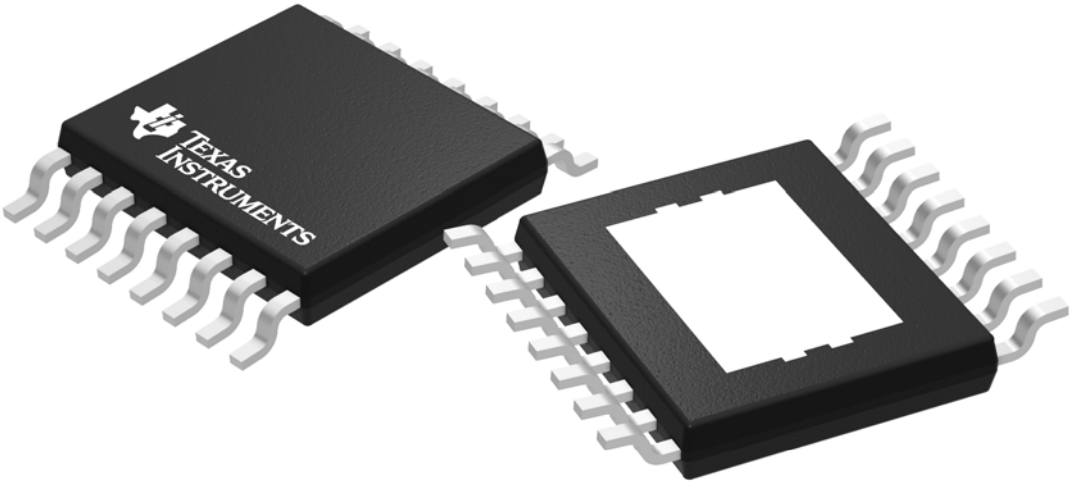

Images above are just a representation of the package family, actual package may vary.
Refer to the product data sheet for package details.

4073225-3/J

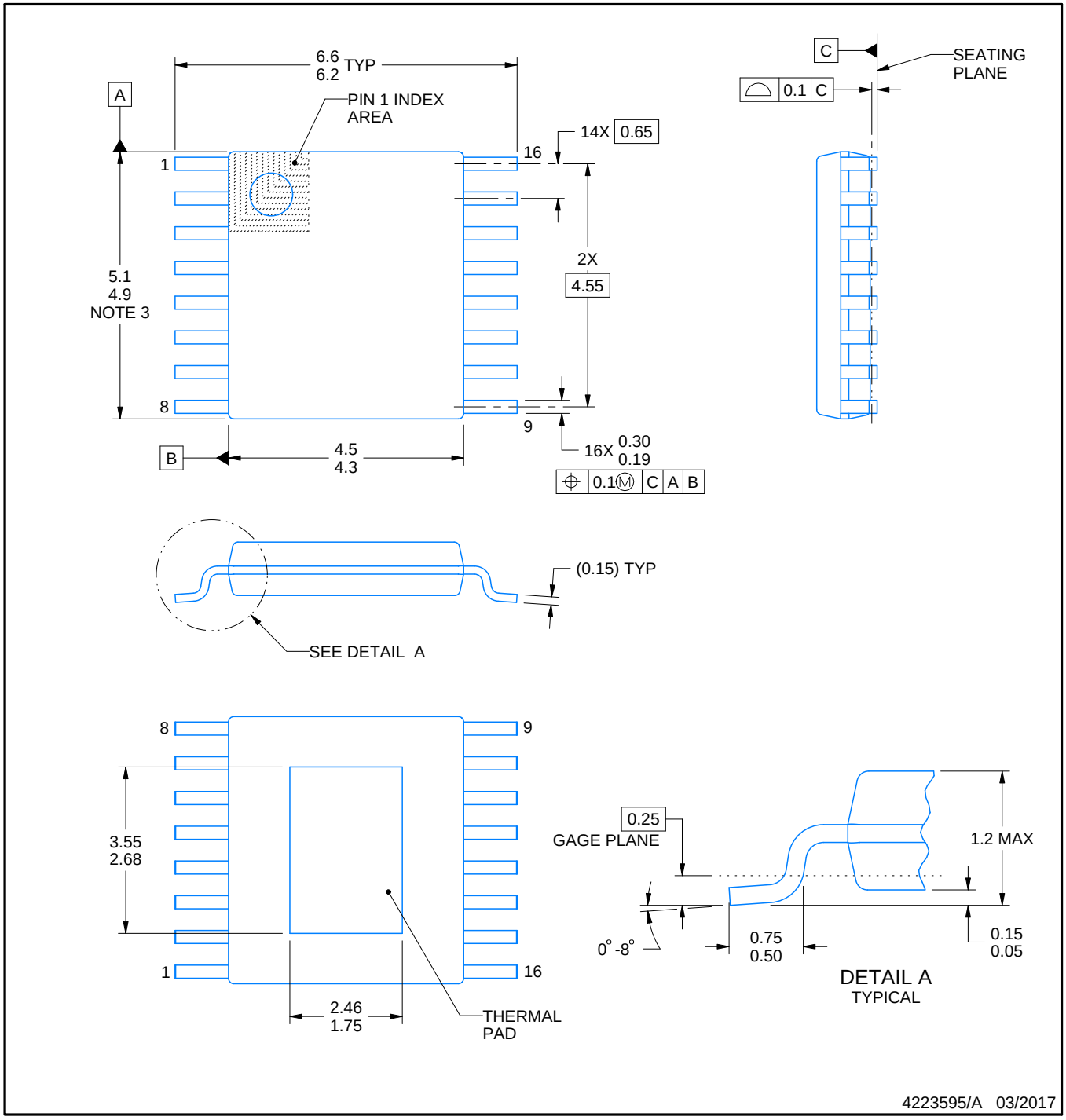

PowerPAD is a trademark of Texas Instruments.

NOTES:

1. All linear dimensions are in millimeters. Any dimensions in parenthesis are for reference only. Dimensioning and tolerancing per ASME Y14.5M.
2. This drawing is subject to change without notice.
3. This dimension does not include mold flash, protrusions, or gate burrs. Mold flash, protrusions, or gate burrs shall not exceed 0.15 mm per side.
4. Reference JEDEC registration MO-153.

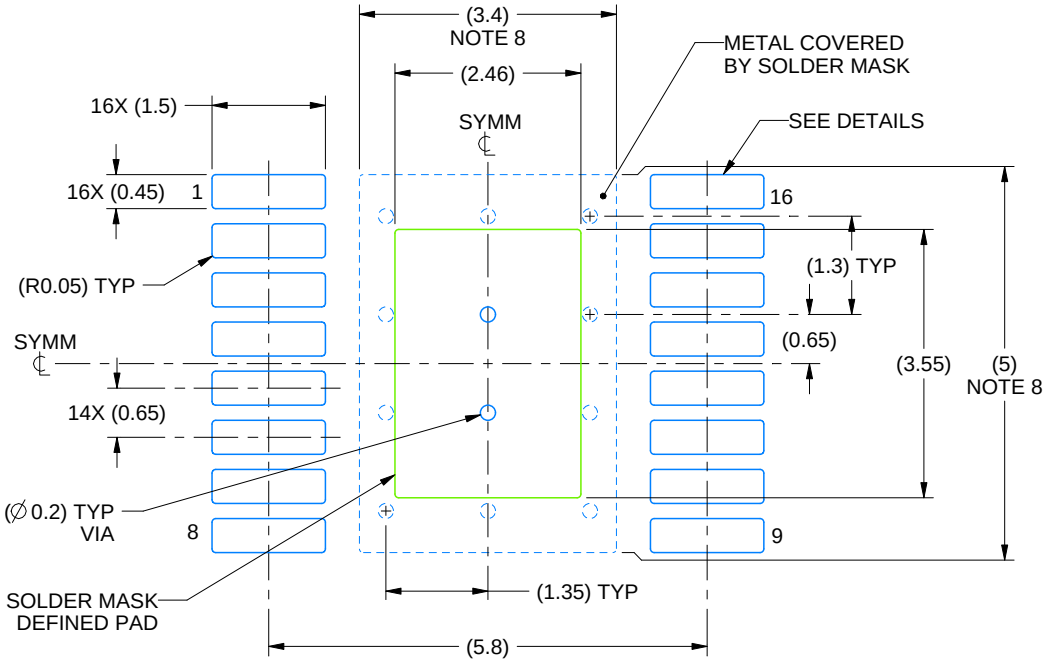

LAND PATTERN EXAMPLE
EXPOSED METAL SHOWN
SCALE: 10X

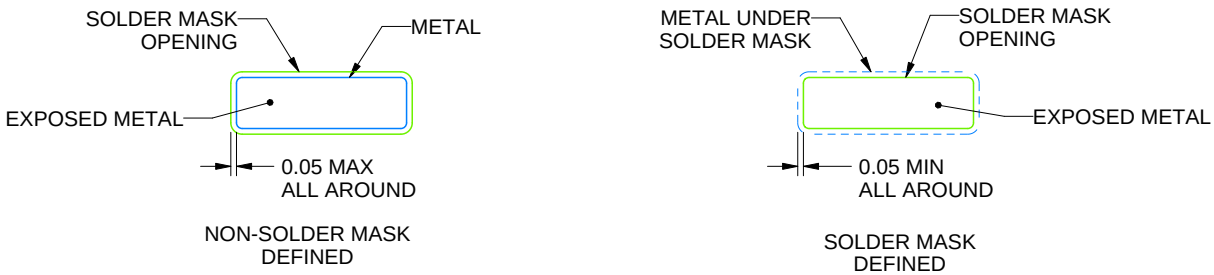

SOLDER MASK DETAILS

4223595/A 03/2017

NOTES: (continued)

5. Publication IPC-7351 may have alternate designs.
6. Solder mask tolerances between and around signal pads can vary based on board fabrication site.
7. This package is designed to be soldered to a thermal pad on the board. For more information, see Texas Instruments literature numbers SLMA002 (www.ti.com/lit/slma002) and SLMA004 (www.ti.com/lit/slma004).
8. Size of metal pad may vary due to creepage requirement.
9. Vias are optional depending on application, refer to device data sheet. It is recommended that vias under paste be filled, plugged or tented.

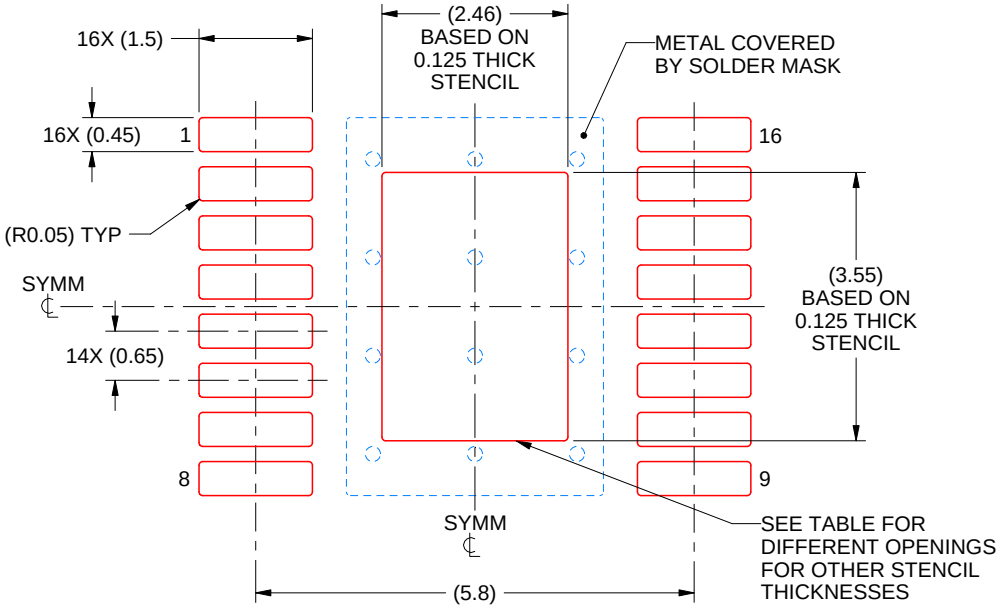

SOLDER PASTE EXAMPLE
BASED ON 0.125 mm THICK STENCIL
SCALE: 10X

STENCIL THICKNESS	SOLDER STENCIL OPENING
0.1	2.75 X 3.97
0.125	2.46 X 3.55 (SHOWN)
0.15	2.25 X 3.24
0.175	2.08 X 3.00

4223595/A 03/2017

NOTES: (continued)

10. Laser cutting apertures with trapezoidal walls and rounded corners may offer better paste release. IPC-7525 may have alternate design recommendations.
11. Board assembly site may have different recommendations for stencil design.

IMPORTANT NOTICE AND DISCLAIMER

TI PROVIDES TECHNICAL AND RELIABILITY DATA (INCLUDING DATA SHEETS), DESIGN RESOURCES (INCLUDING REFERENCE DESIGNS), APPLICATION OR OTHER DESIGN ADVICE, WEB TOOLS, SAFETY INFORMATION, AND OTHER RESOURCES “AS IS” AND WITH ALL FAULTS, AND DISCLAIMS ALL WARRANTIES, EXPRESS AND IMPLIED, INCLUDING WITHOUT LIMITATION ANY IMPLIED WARRANTIES OF MERCHANTABILITY, FITNESS FOR A PARTICULAR PURPOSE OR NON-INFRINGEMENT OF THIRD PARTY INTELLECTUAL PROPERTY RIGHTS.

These resources are intended for skilled developers designing with TI products. You are solely responsible for (1) selecting the appropriate TI products for your application, (2) designing, validating and testing your application, and (3) ensuring your application meets applicable standards, and any other safety, security, regulatory or other requirements.

These resources are subject to change without notice. TI grants you permission to use these resources only for development of an application that uses the TI products described in the resource. Other reproduction and display of these resources is prohibited. No license is granted to any other TI intellectual property right or to any third party intellectual property right. TI disclaims responsibility for, and you will fully indemnify TI and its representatives against, any claims, damages, costs, losses, and liabilities arising out of your use of these resources.

TI’s products are provided subject to TI’s Terms of Sale or other applicable terms available either on ti.com or provided in conjunction with such TI products. TI’s provision of these resources does not expand or otherwise alter TI’s applicable warranties or warranty disclaimers for TI products.

TI objects to and rejects any additional or different terms you may have proposed.

Mailing Address: Texas Instruments, Post Office Box 655303, Dallas, Texas 75265
Copyright © 2025, Texas Instruments Incorporated