- **Members of the Texas Instruments *Widebus*™ Family**
- **Inputs Are TTL-Voltage Compatible**
- **3-State Outputs Drive Bus Lines Directly**
- **Flow-Through Architecture Optimizes PCB Layout**
- **Distributed V_{CC} and GND Configuration to Minimize High-Speed Switching Noise**
- ***EPIC*™ (Enhanced-Performance Implanted CMOS) 1-μm Process**
- **500-mA Typical Latch-Up Immunity at 125°C**
- **Package Options Include Plastic 300-mil Shrink Small-Outline (DL) Packages Using 25-mil Center-to-Center Pin Spacings, Thin Shrink Small-Outline (DGG) Packages, and 380-mil Fine-Pitch Ceramic Flat (WD) Packages Using 25-mil Center-to-Center Pin Spacings**

SN54ACT16245 . . . WD PACKAGE
74ACT16245 . . . DGG OR DL PACKAGE
(TOP VIEW)

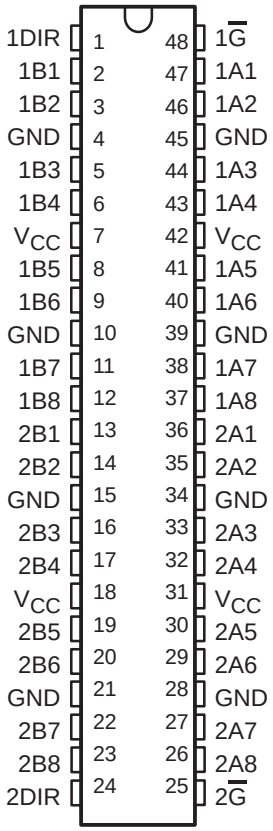

description

The SN54ACT16245 and 74ACT16245 are 16-bit bus transceivers organized as dual-octal noninverting 3-state transceivers and designed for asynchronous two-way communication between data buses. The control-function implementation minimizes external timing requirements.

The devices allow data transmission from the A bus to the B bus or from the B bus to the A bus, depending on the logic level at the direction-control (DIR) input. The enable ($\overline{G}$) input can be used to disable the devices so that the buses are effectively isolated.

The SN54ACT16245 is characterized for operation over the full military temperature range of –55°C to 125°C. The 74ACT16245 is characterized for operation from –40°C to 85°C.

FUNCTION TABLE

CONTROL INPUTS		OPERATION
$\overline{G}$	DIR	
L	L	B data to A bus
L	H	A data to B bus
H	X	Isolation

Please be aware that an important notice concerning availability, standard warranty, and use in critical applications of Texas Instruments semiconductor products and disclaimers thereto appears at the end of this data sheet.

EPIC and Widebus are trademarks of Texas Instruments Incorporated.

PRODUCTION DATA information is current as of publication date. Products conform to specifications per the terms of Texas Instruments standard warranty. Production processing does not necessarily include testing of all parameters.

Copyright © 1996, Texas Instruments Incorporated

logic symbol†

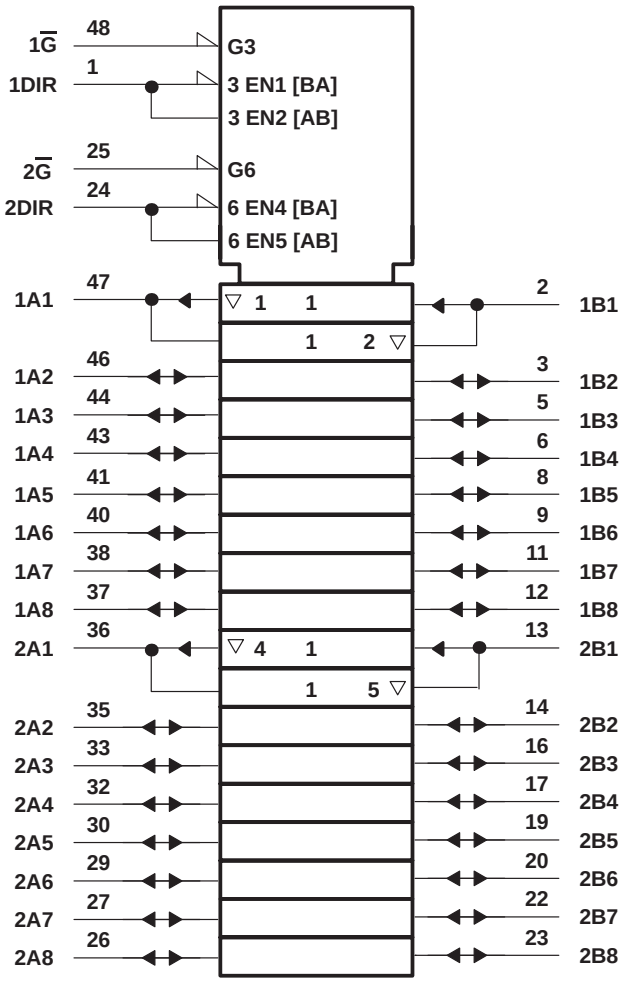

† This symbol is in accordance with ANSI/IEEE Std 91-1984 and IEC Publication 617-12.

logic diagram (positive logic)

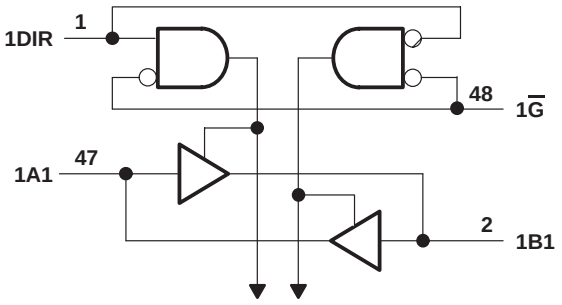

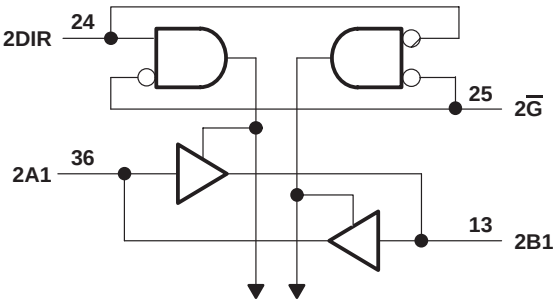

absolute maximum ratings over operating free-air temperature range (unless otherwise noted)†

Supply voltage, V_{CC} . . . . . –0.5 V to 7 V
Input voltage range, V_I (see Note 1) . . . . . –0.5 V to V_{CC} + 0.5 V
Output voltage range, V_O (see Note 1) . . . . . –0.5 V to V_{CC} + 0.5 V
Input clamp current, I_{IK} (V_I < 0 or V_I > V_{CC}) . . . . . ±20 mA
Output clamp current, I_{OK} (V_O < 0 or V_O > V_{CC}) . . . . . ±50 mA
Continuous output current, I_O (V_O = 0 to V_{CC}) . . . . . ±50 mA
Continuous current through V_{CC} or GND . . . . . ±400 mA
Maximum power dissipation at T_A = 55°C (in still air) (see Note 2): DGG package . . . . . 0.85 W
DL package . . . . . 1.2 W
Storage temperature range, T_{stg} . . . . . –65°C to 150°C

† Stresses beyond those listed under “absolute maximum ratings” may cause permanent damage to the device. These are stress ratings only, and functional operation of the device at these or any other conditions beyond those indicated under “recommended operating conditions” is not implied. Exposure to absolute-maximum-rated conditions for extended periods may affect device reliability.

NOTES: 1. The input and output voltage ratings may be exceeded if the input and output current ratings are observed.
2. The maximum package power dissipation is calculated using a junction temperature of 150°C and a board trace length of 750 mils.

recommended operating conditions (see Note 3)

		SN54ACT16245		74ACT16245		UNIT
		MIN	MAX	MIN	MAX	
V_{CC}	Supply voltage (see Note 4)	4.5	5.5	4.5	5.5	V
V_{IH}	High-level input voltage	2		2		V
V_{IL}	Low-level input voltage		0.8		0.8	V
V_I	Input voltage	0	V_{CC}	0	V_{CC}	V
V_O	Output voltage	0	V_{CC}	0	V_{CC}	V
I_{OH}	High-level output current		–24		–24	mA
I_{OL}	Low-level output current		24		24	mA
$\Delta t/\Delta v$	Input transition rise or fall rate	0	10	0	10	ns/V
T_A	Operating free-air temperature	–55	125	–40	85	°C

NOTES: 3. Unused inputs should be tied to V_{CC} through a pullup resistor of approximately 5 kΩ or greater to keep them from floating.
4. All V_{CC} and GND pins must be connected to the proper voltage power supply.

electrical characteristics over recommended operating free-air temperature range (unless otherwise noted)

PARAMETER		TEST CONDITIONS	V_{CC}	T_A = 25°C			SN54ACT16245		74ACT16245		UNIT
				MIN	TYP	MAX	MIN	MAX	MIN	MAX	
V_{OH}		I_{OH} = –50 μA	4.5 V	4.4			4.4		4.4		V
			5.5 V	5.4			5.4		5.4		
		I_{OH} = –24 mA	4.5 V	3.94			3.94		3.8		
			5.5 V	4.94			4.94		4.8		
		I_{OH} = –50 mA†	5.5 V				3.85				
		I_{OH} = –75 mA†	5.5 V						3.85		
V_{OL}		I_{OL} = 50 μA	4.5 V			0.1		0.1		0.1	V
			5.5 V			0.1		0.1		0.1	
		I_{OL} = 24 mA	4.5 V			0.36		0.5		0.44	
			5.5 V			0.36		0.5		0.44	
		I_{OL} = 50 mA†	5.5 V					1.65			
		I_{OL} = 75 mA†	5.5 V							1.65	
I_I	Control inputs	$V_I = V_{CC}$ or GND	5.5 V			±0.1		±1		±1	μA
I_{OZ}	A or B ports‡	$V_O = V_{CC}$ or GND	5.5 V			±0.5		±10		±5	μA
I_{CC}		$V_I = V_{CC}$ or GND, I_O = 0	5.5 V			8		160		80	μA
ΔI_{CC}§		One input at 3.4 V, Other inputs at GND or V_{CC}	5.5 V			0.9		1		1	mA
C_i	Control inputs	$V_I = V_{CC}$ or GND	5 V		4.5						pF
C_{io}	A or B ports	$V_O = V_{CC}$ or GND	5 V		16						pF

† Not more than one output should be tested at a time, and the duration of the test should not exceed 10 ms.
‡ For I/O ports, the parameter I_{OZ} includes the input leakage current I_I.
§ This is the increase in supply current for each input that is at one of the specified TTL voltage levels rather than 0 V or V_{CC}.

switching characteristics over recommended ranges of supply voltage and operating free-air temperature (unless otherwise noted) (see Figure 1)

PARAMETER	FROM (INPUT)	TO (OUTPUT)	T_A = 25°C			SN54ACT16245		74ACT16245		UNIT
			MIN	TYP	MAX	MIN	MAX	MIN	MAX	
t_{PLH}	A or B	B or A	3.2	6.9	9.3	3.2	11.5	3.2	10.5	ns
t_{PHL}			2.6	6.4	9.2	2.6	11.1	2.6	10.2	
t_{PZH}	$\overline{G}$	B or A	2.7	6.4	9.1	2.7	10.9	2.7	10	ns
t_{PZL}			3.4	7.4	10.5	3.4	12.6	3.4	11.6	
t_{PHZ}	$\overline{G}$	B or A	5.8	9.2	11.6	5.8	13.4	5.8	12.6	ns
t_{PLZ}			5.5	8.5	10.8	5.5	12.7	5.5	11.8	

operating characteristics, V_{CC} = 5 V, T_A = 25°C

PARAMETER			TEST CONDITIONS	TYP	UNIT
C_{pd}	Power dissipation capacitance per transceiver	Outputs enabled	C_L = 50 pF, f = 1 MHz	52	pF
		Outputs disabled		10	

PARAMETER MEASUREMENT INFORMATION

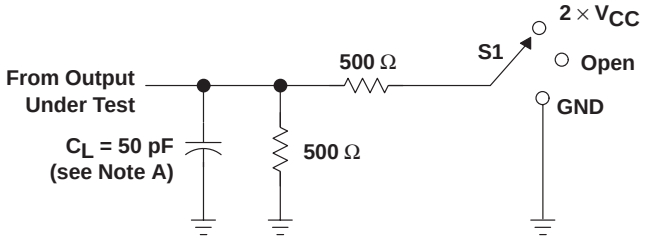

LOAD CIRCUIT

TEST	S1
t_{PLH}/t_{PHL}	Open
t_{PLZ}/t_{PZL}	2 × V_{CC}
t_{PHZ}/t_{PZH}	GND

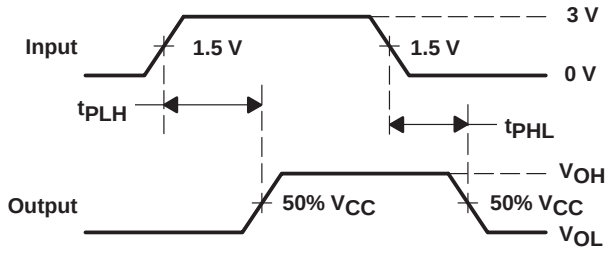

VOLTAGE WAVEFORMS

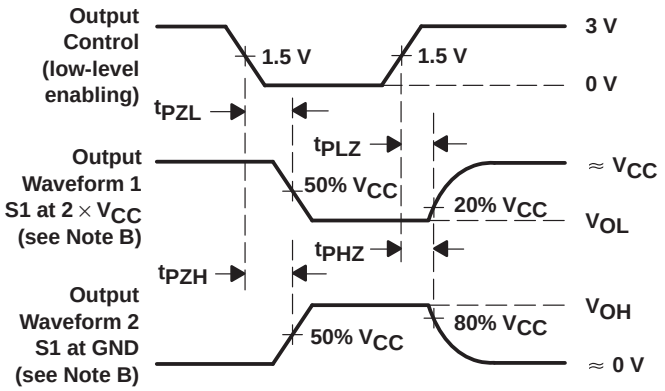

VOLTAGE WAVEFORMS

NOTES: A. C_L includes probe and jig capacitance.
B. Waveform 1 is for an output with internal conditions such that the output is low except when disabled by the output control. Waveform 2 is for an output with internal conditions such that the output is high except when disabled by the output control.
C. All input pulses are supplied by generators having the following characteristics: PRR ≤ 1 MHz, Z_O = 50 Ω, t_r = 3 ns, t_f = 3 ns.
D. The outputs are measured one at a time with one input transition per measurement.

Figure 1. Load Circuit and Voltage Waveforms

PACKAGING INFORMATION

Orderable part number	Status (1)	Material type (2)	Package | Pins	Package qty | Carrier	RoHS (3)	Lead finish/ Ball material (4)	MSL rating/ Peak reflow (5)	Op temp (°C)	Part marking (6)
5962-9202301MXA	Active	Production	CFP (WD) | 48	15 | TUBE	No	SNPB	N/A for Pkg Type	-55 to 125	5962-9202301MXA SNJ54ACT16245WD
74ACT16245DGGR	Active	Production	TSSOP (DGG) | 48	2000 | LARGE T&R	Yes	NIPDAU	Level-1-260C-UNLIM	-40 to 85	ACT16245
74ACT16245DGGR.A	Active	Production	TSSOP (DGG) | 48	2000 | LARGE T&R	Yes	NIPDAU	Level-1-260C-UNLIM	-40 to 85	ACT16245
74ACT16245DL	Obsolete	Production	SSOP (DL) | 48	-	-	Call TI	Call TI	-40 to 85	ACT16245
74ACT16245DLR	Active	Production	SSOP (DL) | 48	1000 | LARGE T&R	Yes	NIPDAU	Level-1-260C-UNLIM	-40 to 85	ACT16245
74ACT16245DLR.A	Active	Production	SSOP (DL) | 48	1000 | LARGE T&R	Yes	NIPDAU	Level-1-260C-UNLIM	-40 to 85	ACT16245
74ACT16245DLRG4	Active	Production	SSOP (DL) | 48	1000 | LARGE T&R	Yes	NIPDAU	Level-1-260C-UNLIM	-40 to 85	ACT16245
SNJ54ACT16245WD	Active	Production	CFP (WD) | 48	15 | TUBE	No	SNPB	N/A for Pkg Type	-	5962-9202301MXA SNJ54ACT16245WD
SNJ54ACT16245WD.A	Active	Production	CFP (WD) | 48	15 | TUBE	No	SNPB	N/A for Pkg Type	-55 to 125	5962-9202301MXA SNJ54ACT16245WD

(1) **Status:** For more details on status, see our product life cycle.

(2) **Material type:** When designated, preproduction parts are prototypes/experimental devices, and are not yet approved or released for full production. Testing and final process, including without limitation quality assurance, reliability performance testing, and/or process qualification, may not yet be complete, and this item is subject to further changes or possible discontinuation. If available for ordering, purchases will be subject to an additional waiver at checkout, and are intended for early internal evaluation purposes only. These items are sold without warranties of any kind.

(3) **RoHS values:** Yes, No, RoHS Exempt. See the TI RoHS Statement for additional information and value definition.

(4) **Lead finish/Ball material:** Parts may have multiple material finish options. Finish options are separated by a vertical ruled line. Lead finish/Ball material values may wrap to two lines if the finish value exceeds the maximum column width.

(5) **MSL rating/Peak reflow:** The moisture sensitivity level ratings and peak solder (reflow) temperatures. In the event that a part has multiple moisture sensitivity ratings, only the lowest level per JEDEC standards is shown. Refer to the shipping label for the actual reflow temperature that will be used to mount the part to the printed circuit board.

(6) **Part marking:** There may be an additional marking, which relates to the logo, the lot trace code information, or the environmental category of the part.

Multiple part markings will be inside parentheses. Only one part marking contained in parentheses and separated by a "~" will appear on a part. If a line is indented then it is a continuation of the previous line and the two combined represent the entire part marking for that device.

Important Information and Disclaimer: The information provided on this page represents TI's knowledge and belief as of the date that it is provided. TI bases its knowledge and belief on information provided by third parties, and makes no representation or warranty as to the accuracy of such information. Efforts are underway to better integrate information from third parties. TI has taken and continues to take reasonable steps to provide representative and accurate information but may not have conducted destructive testing or chemical analysis on incoming materials and chemicals. TI and TI suppliers consider certain information to be proprietary, and thus CAS numbers and other limited information may not be available for release.

In no event shall TI's liability arising out of such information exceed the total purchase price of the TI part(s) at issue in this document sold by TI to Customer on an annual basis.

TAPE AND REEL INFORMATION

REEL DIMENSIONS

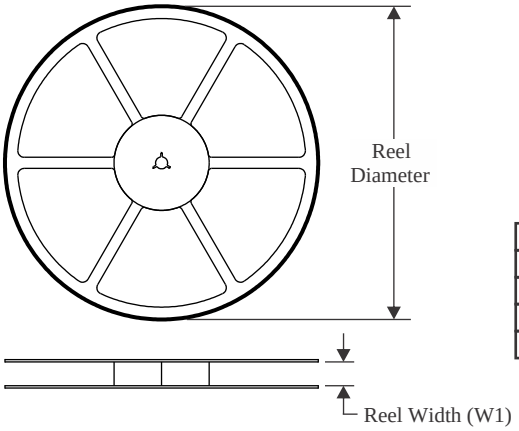

TAPE DIMENSIONS

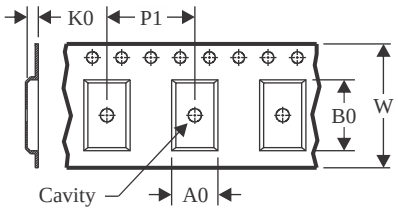

A0	Dimension designed to accommodate the component width
B0	Dimension designed to accommodate the component length
K0	Dimension designed to accommodate the component thickness
W	Overall width of the carrier tape
P1	Pitch between successive cavity centers

QUADRANT ASSIGNMENTS FOR PIN 1 ORIENTATION IN TAPE

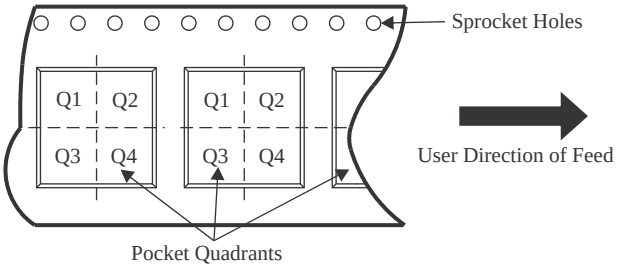

*All dimensions are nominal

Device	Package Type	Package Drawing	Pins	SPQ	Reel Diameter (mm)	Reel Width W1 (mm)	A0 (mm)	B0 (mm)	K0 (mm)	P1 (mm)	W (mm)	Pin1 Quadrant
74ACT16245DGGR	TSSOP	DGG	48	2000	330.0	24.4	8.6	13.0	1.8	12.0	24.0	Q1
74ACT16245DLR	SSOP	DL	48	1000	330.0	32.4	11.35	16.2	3.1	16.0	32.0	Q1

TAPE AND REEL BOX DIMENSIONS

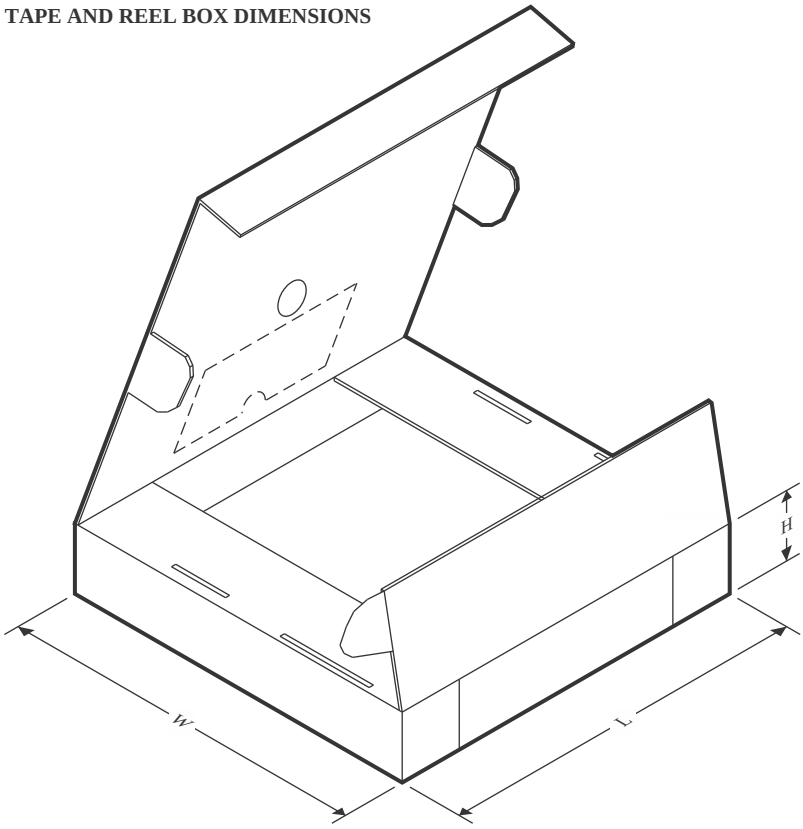

*All dimensions are nominal

Device	Package Type	Package Drawing	Pins	SPQ	Length (mm)	Width (mm)	Height (mm)
74ACT16245DGGR	TSSOP	DGG	48	2000	367.0	367.0	45.0
74ACT16245DLR	SSOP	DL	48	1000	367.0	367.0	55.0

WD (R-GDFP-F)** **CERAMIC DUAL FLATPACK**

48 LEADS SHOWN

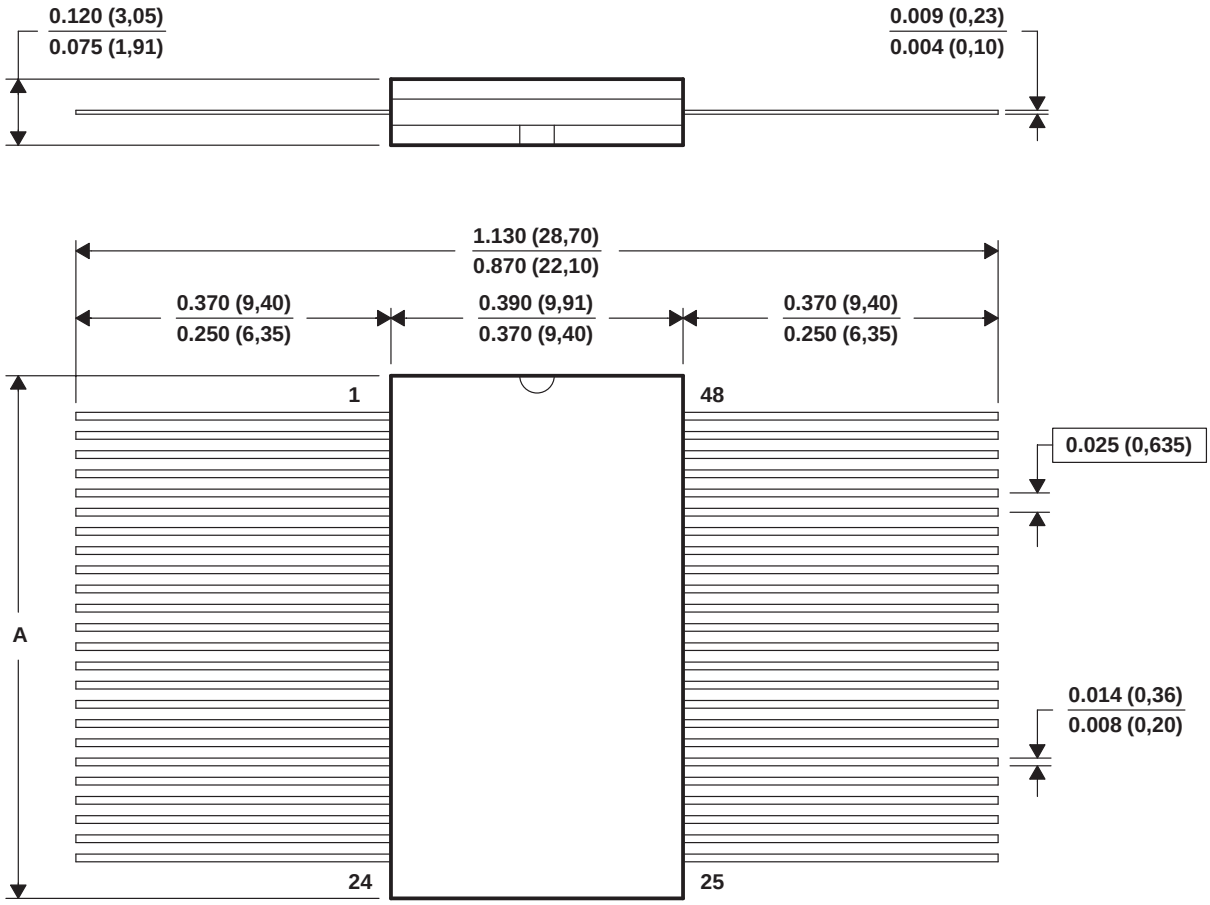

NO. OF LEADS**	48	56
A MAX	0.640 (16,26)	0.740 (18,80)
A MIN	0.610 (15,49)	0.710 (18,03)

4040176 / D 10/97

NOTES: A. All linear dimensions are in inches (millimeters).
B. This drawing is subject to change without notice.
C. This package can be hermetically sealed with a ceramic lid using glass frit.
D. Index point is provided on cap for terminal identification only
E. Falls within MIL STD 1835: GDFP1-F48 and JEDEC MO-146AA
GDFP1-F56 and JEDEC MO-146AB

DL (R–PDSO–G48) PLASTIC SMALL–OUTLINE PACKAGE

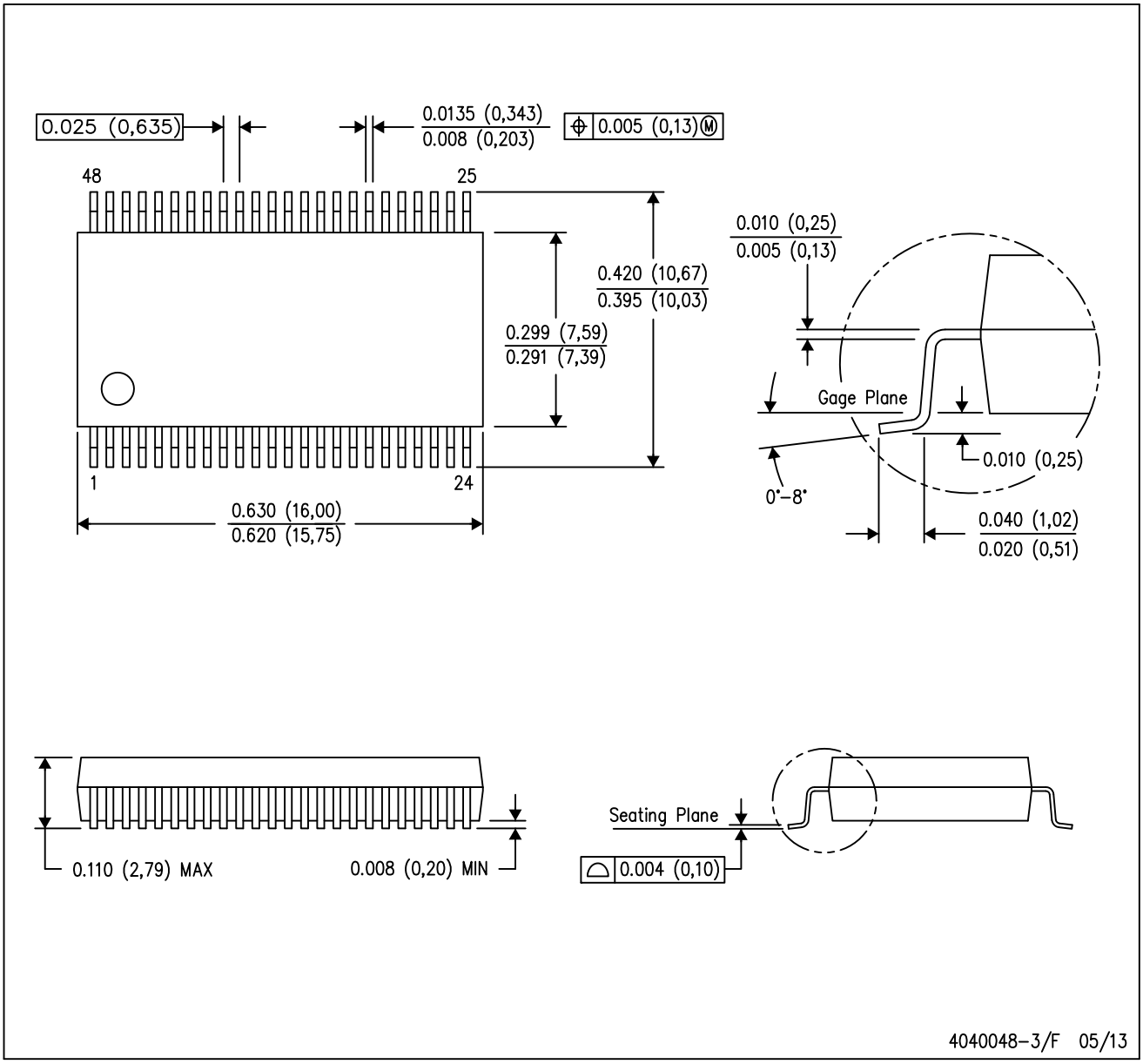

NOTES:
A. All linear dimensions are in inches (millimeters).
B. This drawing is subject to change without notice.
C. Body dimensions do not include mold flash or protrusion not to exceed 0.006 (0,15).
D. Falls within JEDEC MO–118

PowerPAD is a trademark of Texas Instruments.

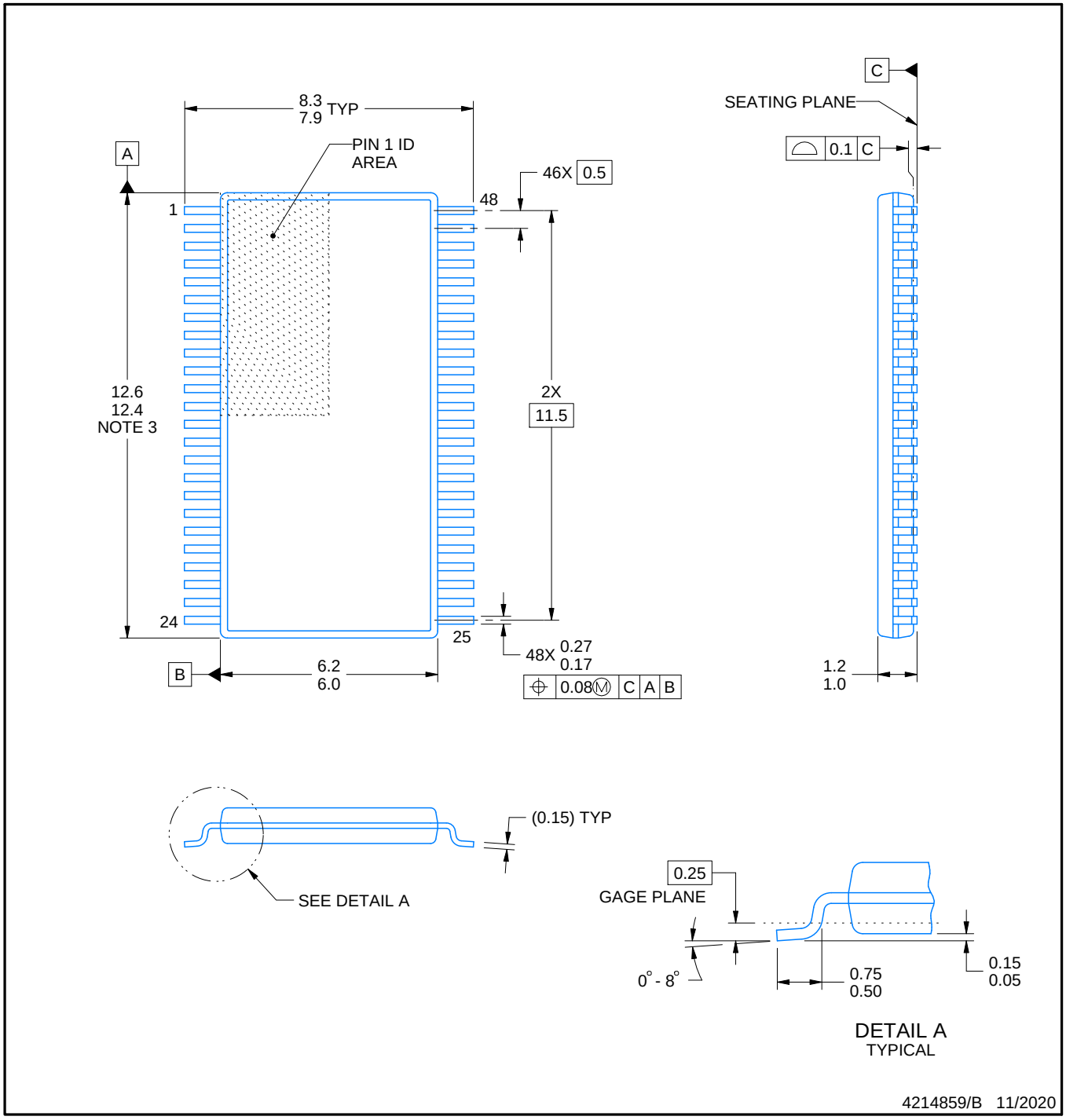

NOTES:

1. All linear dimensions are in millimeters. Any dimensions in parenthesis are for reference only. Dimensioning and tolerancing per ASME Y14.5M.
2. This drawing is subject to change without notice.
3. This dimension does not include mold flash, protrusions, or gate burrs. Mold flash, protrusions, or gate burrs shall not exceed 0.15 mm per side.
4. Reference JEDEC registration MO-153.

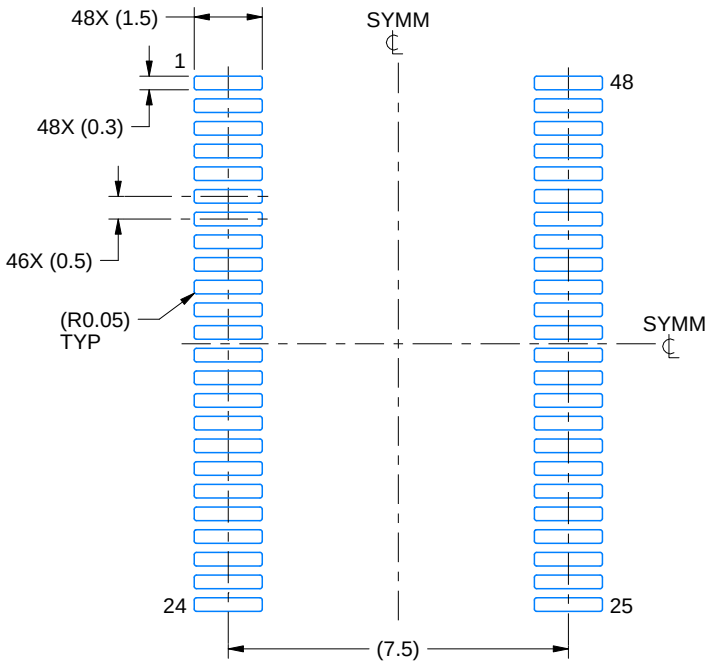

LAND PATTERN EXAMPLE
SCALE:6X

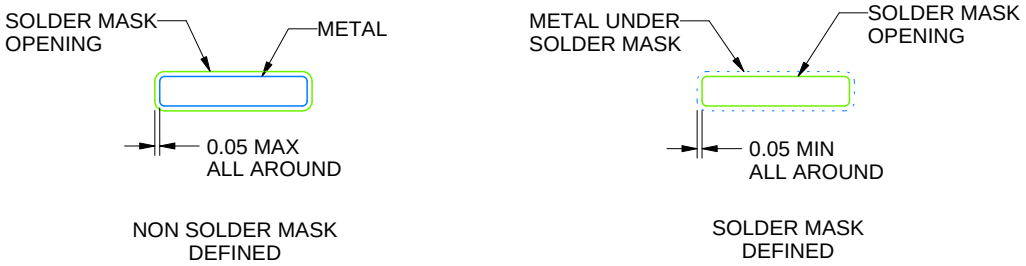

SOLDER MASK DETAILS

4214859/B 11/2020

NOTES: (continued)

5. Publication IPC-7351 may have alternate designs.
6. Solder mask tolerances between and around signal pads can vary based on board fabrication site.

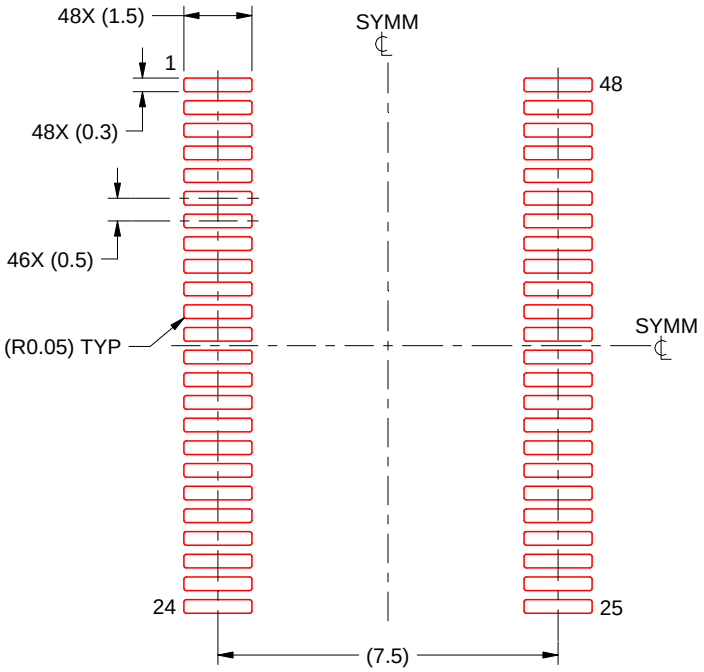

SOLDER PASTE EXAMPLE
BASED ON 0.125 mm THICK STENCIL
SCALE:6X

4214859/B 11/2020

NOTES: (continued)

7. Laser cutting apertures with trapezoidal walls and rounded corners may offer better paste release. IPC-7525 may have alternate design recommendations.
8. Board assembly site may have different recommendations for stencil design.

DGG (R-PDSO-G)** **PLASTIC SMALL-OUTLINE PACKAGE**

48 PINS SHOWN

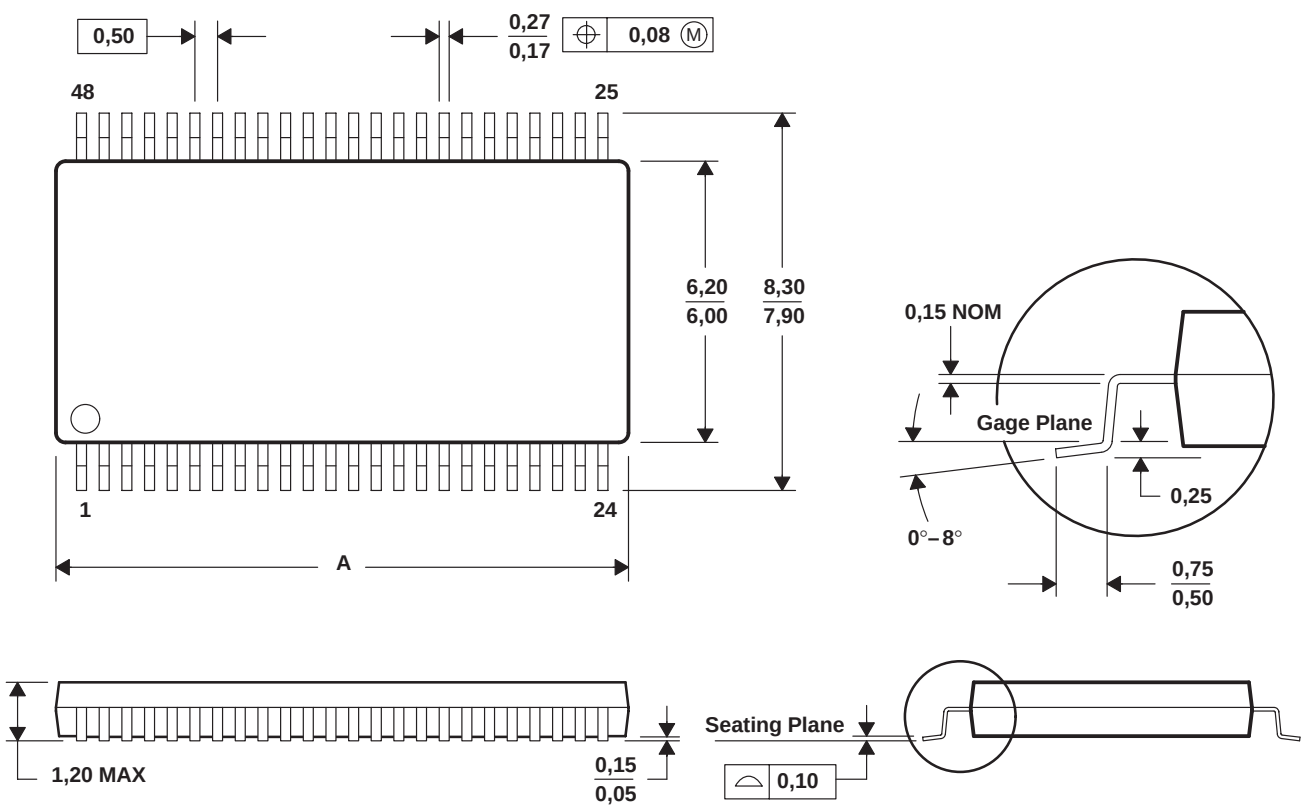

DIM \ PINS **	48	56	64
A MAX	12,60	14,10	17,10
A MIN	12,40	13,90	16,90

4040078/F 12/97

NOTES: A. All linear dimensions are in millimeters.
B. This drawing is subject to change without notice.
C. Body dimensions do not include mold protrusion not to exceed 0,15.
D. Falls within JEDEC MO-153

IMPORTANT NOTICE AND DISCLAIMER

TI PROVIDES TECHNICAL AND RELIABILITY DATA (INCLUDING DATA SHEETS), DESIGN RESOURCES (INCLUDING REFERENCE DESIGNS), APPLICATION OR OTHER DESIGN ADVICE, WEB TOOLS, SAFETY INFORMATION, AND OTHER RESOURCES “AS IS” AND WITH ALL FAULTS, AND DISCLAIMS ALL WARRANTIES, EXPRESS AND IMPLIED, INCLUDING WITHOUT LIMITATION ANY IMPLIED WARRANTIES OF MERCHANTABILITY, FITNESS FOR A PARTICULAR PURPOSE OR NON-INFRINGEMENT OF THIRD PARTY INTELLECTUAL PROPERTY RIGHTS.

These resources are intended for skilled developers designing with TI products. You are solely responsible for (1) selecting the appropriate TI products for your application, (2) designing, validating and testing your application, and (3) ensuring your application meets applicable standards, and any other safety, security, regulatory or other requirements.

These resources are subject to change without notice. TI grants you permission to use these resources only for development of an application that uses the TI products described in the resource. Other reproduction and display of these resources is prohibited. No license is granted to any other TI intellectual property right or to any third party intellectual property right. TI disclaims responsibility for, and you will fully indemnify TI and its representatives against, any claims, damages, costs, losses, and liabilities arising out of your use of these resources.

TI’s products are provided subject to TI’s Terms of Sale or other applicable terms available either on ti.com or provided in conjunction with such TI products. TI’s provision of these resources does not expand or otherwise alter TI’s applicable warranties or warranty disclaimers for TI products.

TI objects to and rejects any additional or different terms you may have proposed.

Mailing Address: Texas Instruments, Post Office Box 655303, Dallas, Texas 75265
Copyright © 2025, Texas Instruments Incorporated