TPS61372L 16V, 3.8A Synchronous Boost With Load Disconnect

1 Features

- Input voltage range: 2.5V to 5.5V
- Output voltage range: up to 16V
- On-resistance:
  - Low-side FET - 36mΩ
  - High-side FET - 107mΩ
- Switch peak current limit: 3.8A
- Quiescent current from V_{IN}: 74µA
- Quiescent current from V_{OUT}: 10µA
- Shutdown current from V_{IN}: 1µA
- Switching frequency: 1.5MHz
- Soft-start time: 0.9ms
- Hiccup output short protection
- Auto PFM and forced PWM selectable
- Load disconnect during shutdown
- External loop compensation
- Output overvoltage protection
- 2.5mm × 2.5mm HotRod™ Lite WQFN package
- Create a custom design using the TPS61372L with WEBENCH® Power Designer

2 Applications

- RF PA driver
- NAND flash
- Backup power
- Motor driver
- Optical sensor driver

3 Description

The TPS61372L is a full-integrated synchronous boost converter with the load disconnect built-in. The device supports output voltage up to 16V with a 3.8A current limit. The input voltage ranges from 2.5V to 5.5V supporting applications powered by a single-cell Lithium-ion battery or 5V bus.

The TPS61372L uses the peak current mode with the adaptive off-time control topology. The device works in PWM operation of 1.5 MHz at moderate-to-heavy loads. At the light load conditions, the device can be configured in either auto PFM or forced PWM operation by the MODE pin connection. Auto PFM mode has the benefit of high efficiency at light load while forced PWM operation keeps the switching frequency constant across the whole load range. The TPS61372L has a soft start to minimize the inrush current during start-up. The TPS61372L features of the load disconnect during shut down and provides a output short protection of hiccup mode. In addition, the device implements output overvoltage and thermal shutdown protection. The TPS61372L delivers a small solution size with a 14-pin WQFN 2.5mm × 2.5mm package of 0.8mm height.

Package Information

PART NUMBER	PACKAGE(1)	BODY SIZE (NOM)
TPS61372L	WQFN (14)	2.5mm × 2.5mm

(1) For all available packages, see the orderable addendum at the end of the data sheet.

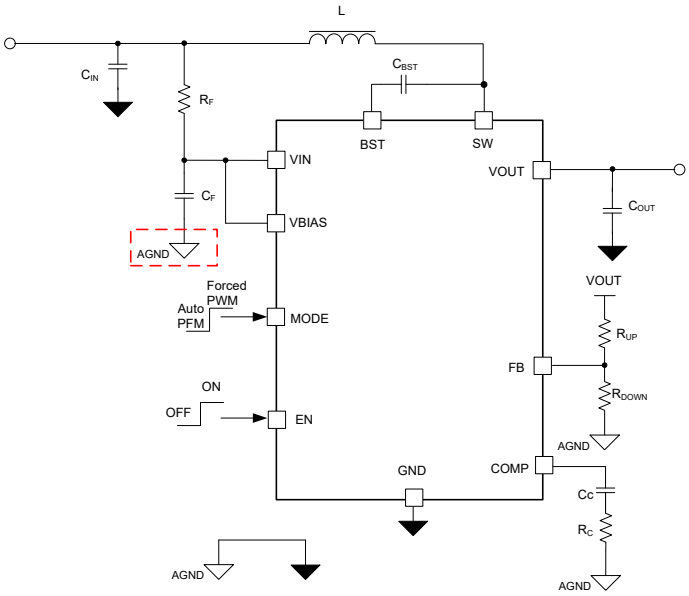

Typical Application Circuit

An IMPORTANT NOTICE at the end of this data sheet addresses availability, warranty, changes, use in safety-critical applications, intellectual property matters and other important disclaimers. PRODUCTION DATA.

Table of Contents

1 Features.....1
2 Applications.....1
3 Description.....1
4 Pin Configuration and Functions.....3
5 Specifications.....4
5.1 Absolute Maximum Ratings.....4
5.2 ESD Ratings.....4
5.3 Recommended Operating Conditions.....4
5.4 Thermal Information.....5
5.5 Electrical Characteristics.....5
5.6 Typical Characteristics.....7
6 Detailed Description.....9
6.1 Overview.....9
6.2 Functional Block Diagram.....9
6.3 Feature Description.....10
6.4 Device Functional Modes.....11
7 Application and Implementation.....12
7.1 Application Information.....12
7.2 Typical Application.....12
7.3 Power Supply Recommendations.....21
7.4 Layout.....21
8 Device and Documentation Support.....24
8.1 Device Support.....24
8.2 Receiving Notification of Documentation Updates.....24
8.3 Support Resources.....24
8.4 Trademarks.....24
8.5 Electrostatic Discharge Caution.....24
8.6 Glossary.....24
9 Revision History.....25
10 Mechanical, Packaging, and Orderable Information.....25

Copyright © 2025 Texas Instruments Incorporated

4 Pin Configuration and Functions

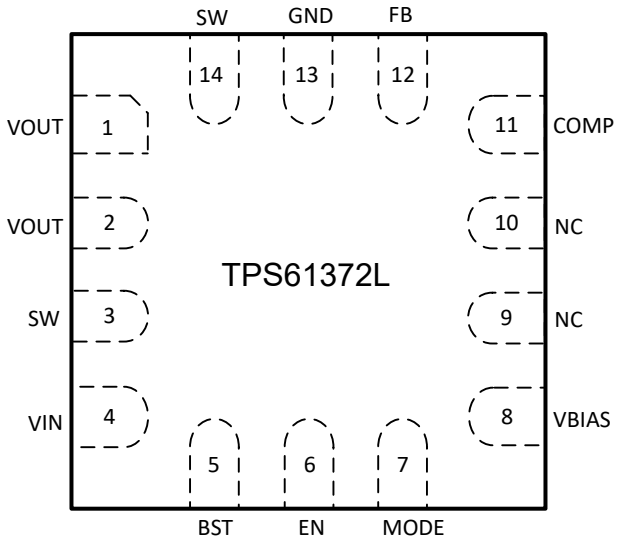

Figure 4-1. TPS61372L VAR Package, 14-Pin WQFN (Top View)

Table 4-1. Pin Functions

PIN		I/O	DESCRIPTION
NUMBER	NAME		
1, 2	VOUT	PWR	Boost converter output.
3, 14	SW	PWR	The switching node pin of the converter. SW pin is connected to the drain of the internal low-side FET and the source of the internal high-side FET.
4	VIN	I	IC power supply input. Connect this pin to input power rail by a RC filter.
5	BST	O	Power supply for the high-side FET gate driver. A capacitor must be connected between this pin and the SW pin.
6	EN	I	Enable logic input. Logic high level enables the device. Logic low level disables the device and turns it into shutdown mode.
7	MODE	I	Operation mode selection pin. MODE = low, the device works in auto PFM mode with good light load efficiency. MODE = high, the device is in forced PWM mode and keeps the switching frequency constant across the whole load range.
8	VBIAS	I	IC supply for internal logic control blocks, this pin must be connected to VIN pin directly.
9, 10	NC	-	No connection. Just leave them floating.
11	COMP	O	Output of the internal error amplifier. The loop compensation network must be connected between this pin and GND.
12	FB	I	Output voltage feedback. A resistor divider connecting to this pin sets the output voltage.
13	GND	-	Ground.

Copyright © 2025 Texas Instruments Incorporated

5 Specifications

5.1 Absolute Maximum Ratings

over operating free-air temperature range (unless otherwise noted)[1]

		MIN	MAX	UNIT
Voltage range at terminals[2]	BST	–0.3	SW+6	V
Voltage range at terminals[2]	SW, VOUT	-0.3	19	V
Voltage range at terminals[2]	VIN, EN, COMP, FB, MODE, NC	–0.3	6	V
Operating junction temperature, T_J		–40	150	°C
Storage temperature, T_{stg}		–65	150	°C

(1) Stresses beyond those listed under *Absolute Maximum Ratings* may cause permanent damage to the device. These are stress ratings only, which do not imply functional operation of the device at these or any other conditions beyond those indicated under *Recommended Operating Conditions*. Exposure to absolute-maximum-rated conditions for extended periods may affect device reliability.
(2) All voltage values are with respect to network ground terminal.

5.2 ESD Ratings

			VALUE	UNIT
$V_{(ESD)}$ [1]	Electrostatic discharge	Human-body model (HBM), per ANSI/ESDA/JEDEC JS-001[2]	±2000	V
		Charged-device model (CDM), per JEDEC specification JESD22-C101[3]	±500	

(1) Electrostatic discharge (ESD) to measure device sensitivity and immunity to damage caused by assembly line electrostatic discharges in to the device.
(2) Level listed above is the passing level per ANSI, ESDA, and JEDEC JS-001. JEDEC document JEP155 states that 500-V HBM allows safe manufacturing with a standard ESD control process. Manufacturing with less than 500-V HBM is possible with the necessary precautions.
(3) Level listed above is the passing level per EIA-JEDEC JESD22-C101. JEDEC document JEP157 states that 250-V CDM allows safe manufacturing with a standard ESD control process. Manufacturing with less than 250-V CDM is possible with the necessary precautions.

5.3 Recommended Operating Conditions

Over operating free-air temperature range unless otherwise noted.

		MIN	NOM	MAX	UNIT
V_{IN}	Input voltage	2.5		5.5	V
V_{OUT}	Output voltage	5		16	V
T_J	Operating junction temperature	–40		125	°C

Copyright © 2025 Texas Instruments Incorporated

5.4 Thermal Information

THERMAL METRIC[1]		TPS61372L VAR 14 PINS	UNIT
$R_{\theta JA}$	Junction-to-ambient thermal resistance	75.4	°C/W
$R_{\theta JC(top)}$	Junction-to-case (top) thermal resistance	46.4	°C/W
$R_{\theta JB}$	Junction-to-board thermal resistance	25.0	°C/W
ψ_{JT}	Junction-to-top characterization parameter	1.8	°C/W
ψ_{JB}	Junction-to-board characterization parameter	25.1	°C/W

(1) For more information about traditional and new thermal metrics, see the *Semiconductor and IC Package Thermal Metrics* application report, SPRA953.

5.5 Electrical Characteristics

V_{IN} = 2.5 V to 5.5 V and V_{OUT} = 5 V to 16 V, T_J = - 40 °C to 125 °C , Typical values are at T_J = 25 °C, unless otherwise noted.

PARAMETER		TEST CONDITION	MIN	TYP	MAX	UNIT
POWER SUPPLY						
V_{IN_UVLO}	Input voltage undervoltage lockout (UVLO) threshold, rising	V_{OUT} = 12 V, T_J = - 40 °C to 125 °C			2.32	V
	Input voltage undervoltage lockout (UVLO) threshold, falling				2.1	V
I_{Q_VIN}	Quiescent current into VIN pin	IC enabled, no switching T_J = – 40 °C to 85 °C		74	110	µA
I_{Q_VOUT}	Quiescent current into VOUT pin	IC enabled, no switching, V_{IN} = 2.5 V, V_{OUT} = 5 V to 16 V, T_J = – 40 °C to 85 °C		10	26	µA
I_{SD_VIN}	Shutdown current from VIN to GND	V_{IN} = 2.5 V to 5.5 V, V_{OUT} = SW = 0 V, EN = 0, T_J = - 40 °C to 85 °C		0.1	1	µA
I_{SD_VIN}	Shutdown current from VIN to GND	V_{IN} = 3.3V, V_{OUT} = SW = 0 V, EN = 0, T_J = - 40 °C to 85 °C		0.1	1	µA
I_{SD_SW}	Shutdown current from SW to GND and VOUT	SW = 3.3V, V_{IN} = V_{OUT} = 0 V, EN = 0 , T_J = - 40 °C to 85 °C			2	µA

5.5 Electrical Characteristics (continued)

V_{IN} = 2.5 V to 5.5 V and V_{OUT} = 5 V to 16 V, T_J = - 40 °C to 125 °C , Typical values are at T_J = 25 °C, unless otherwise noted.

PARAMETER		TEST CONDITION	MIN	TYP	MAX	UNIT
OUTPUT VOLTAGE						
V_{REF}	Reference voltage on FB pin		0.585	0.594	0.603	V
	AUTO PFM mode	V_{IN} = 3.3 V, V_{OUT} = 12 V, T_J = 25 °C		1.016		V_{REF}
I_{FB_LKG}	Leakage current into FB pin				30	nA
POWER SWITCHES						
$R_{DS(on)}$	Low-side FET on resistance	V_{IN} = 3.3 V, V_{OUT} = 12 V, T_J = 25 °C		36		mΩ
	High-side + Dis connect FET on resistance	V_{IN} = 3.3 V, V_{OUT} = 12 V, T_J = 25 °C		107		mΩ
CURRENT LIMIT						
I_{LIM}	Current Limit (Auto PFM)	V_{IN} = 3 V to 4.5 V, V_{OUT} = 5 V to 16 V, T_J = -40 °C to 125 °C	3.4	3.8	4.3	A
	Current Limit (Forced PWM)	V_{IN} = 3 V to 4.5 V, V_{OUT} = 5 V to 16 V, T_J = -40 °C to 125 °C	3.28	3.6	4.0	A
EN, MODE LOGICS						
V_{IH}	EN, MODE pin high level input voltage				1.2	V
V_{IL}	EN, MODE pin low level input voltage		0.4			V
V_{HYS}	EN, MODE pin Hysteresis			136		mV
$T_{DEGLITCH}$	EN, MODE deglitch time rising / falling	V_{IN} = 3.3 V, V_{OUT} = 12 V, T_J = 25 °C		13		µS
R_{PD}	EN, MODE pull down resistor	V_{IN} = 3.3 V, V_{OUT} = 12 V, T_J = 25 °C		800		kΩ
SWITCHING CHARACTER						
f_{SW}	Switch frequency	V_{IN} = 3 V to 4.5 V, V_{OUT} = 5 V to 12 V, T_J = -40 °C to 125 °C	1.2	1.5	1.7	MHz
f_{SW_FOLD}	Switch frequency foldback	V_{IN} = 3.3 V, T_J = - 40 °C to 125 °C	470	535	600	kHz
V_{FSW_LOW}	Threshold for fsw foldback (1.5 MHz normal)	V_{IN} = 3.3 V, T_J = - 40 °C to 125 °C	15%	20%	25%	V_{IN}
$V_{FSW_LOW_HSY}$	Hysteresis for fsw foldback	V_{IN} = 3.3 V, T_J = 25 °C		150		mV
TIMING						
t_{ON_MIN}	Minimum on time	V_{IN} = 3.3V, T_J =- 40 °C to 125 °C		75	95	ns
t_{SS}	Soft-start time	V_{IN} = 3.3 V, V_{OUT} = 12 V, T_J = 25 °C		0.9		ms
t_{HIC_ON}	Off time of hiccup cycle	V_{IN} = 3.3 V, V_{OUT} = 12 V, T_J = 25 °C		74		ms
t_{HIC_OFF}	On time of hiccup cycle	V_{IN} = 3.3 V, V_{OUT} = 12 V, T_J = 25 °C		1.9		ms
ERROR AMPLIFIER						
V_{COMPH}	COMP output high voltage Auto PFM	V_{IN} = 3.3 V, V_{OUT} = 12 V, T_J = 25 °C, V_{FB} = V_{REF} - 200mV		1.4		V
	COMP output high voltage Forced PWM	V_{IN} = 3.3 V, V_{OUT} = 12 V, T_J = 25 °C, V_{FB} = V_{REF} - 200mV		1.5		V
V_{COMPL}	COMP output low voltage Auto PFM	V_{IN} = 3.3 V, V_{OUT} = 12 V, T_J = 25 °C, V_{FB} = V_{REF} + 200mV		0.8		V
	COMP output low voltage Forced PWM	V_{IN} = 3.3 V, V_{OUT} = 12 V, T_J = 25 °C, V_{FB} = V_{REF} + 200mV		0.6		V
Gm	Error amplifier trans conductance	V_{IN} = 3.3 V, V_{OUT} = 12 V, T_J = 25 °C		175		µS
I_{SINK_EA}	Sink current of COMP	V_{IN} = 3.3 V, T_J = 25 °C, V_{FB} = V_{REF} + 200mV		20		µA
I_{SOURCE_EA}	Source current of COMP	V_{IN} = 3.3 V, T_J = 25 °C, V_{FB} = V_{REF} - 200mV		20		µA
PROTECTION						
V_{OVP}	Output overvoltage protection threshold	V_{IN} = 2.5 V to 5.5 V, T_J =- 40 °C to 125 °C	16.5	17.3	18	V
V_{OVP_HYS}	Output overvoltage protection hysteresis	V_{IN} = 3.3 V, V_{OUT} = 12 V, T_J = 25 °C		500		mV
THERMAL						
T_{SD}	Thermal shutdown threshold	V_{IN} = 3.3 V, V_{OUT} = 12 V		140		°C
T_{SD_HYS}	Thermal shutdown hysteresis	V_{IN} = 3.3 V, V_{OUT} = 12 V		20		°C

Copyright © 2025 Texas Instruments Incorporated

5.6 Typical Characteristics

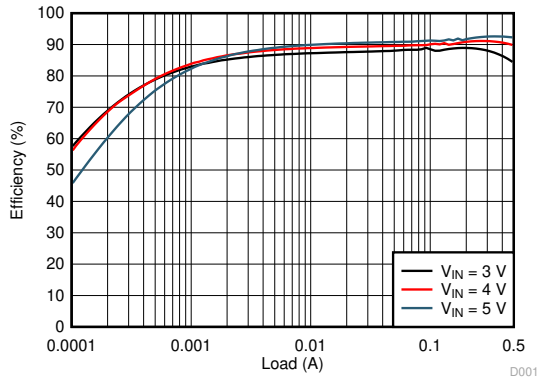

V_{OUT} = 12 V L = 2.2 µH Auto PFM

Figure 5-1. Efficiency vs Load

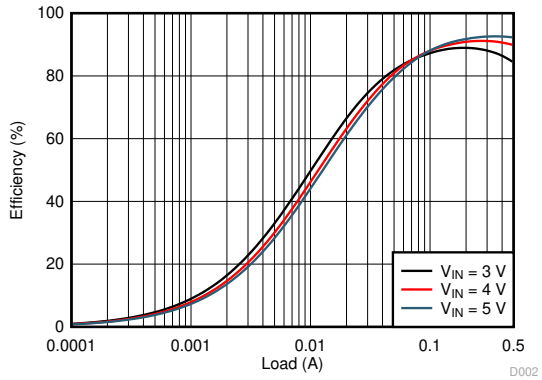

V_{OUT} = 12 V L = 2.2 µH Forced PWM

Figure 5-2. Efficiency vs Load

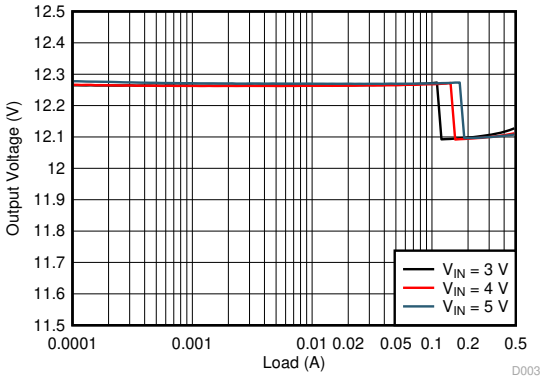

V_{OUT} = 12 V L = 2.2 µH Auto PFM

Figure 5-3. Load Regulation

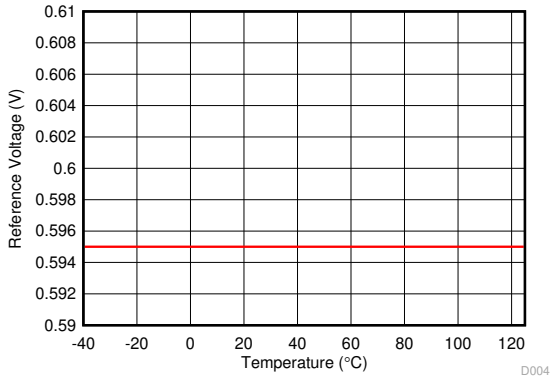

V_{IN} = 4 V

Figure 5-4. Reference Voltage vs Temperature

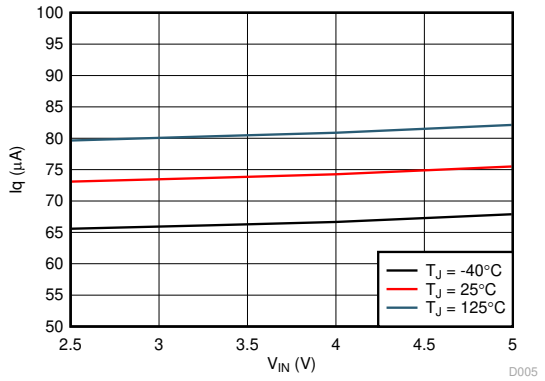

V_{IN} = 2.5 V to 5.5 V V_{OUT} = 12 V No Switching

Figure 5-5. I_q vs V_{IN}

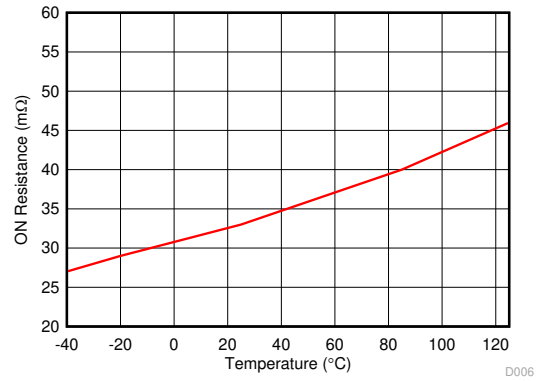

V_{IN} = 4 V V_{OUT} = 12 V

Figure 5-6. Low-Side RDS_{ON} vs Temperature

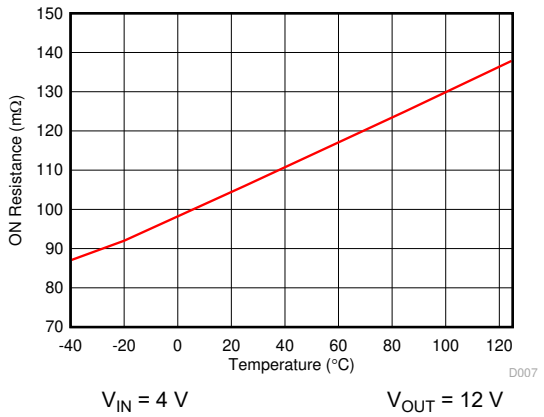

Figure 5-7. High-side RDS_{ON} vs Temperature

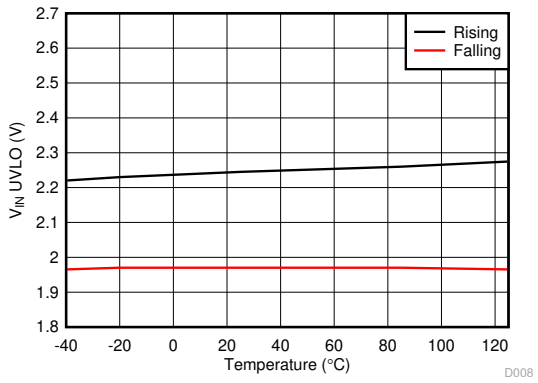

Figure 5-8. UVLO Threshold vs Temperature

Copyright © 2025 Texas Instruments Incorporated

6 Detailed Description

6.1 Overview

The TPS61372L is a highly-integrated synchronous boost converter to support 16V output with load disconnect and short protection built-in. The TPS61372L supports input voltage ranging from 2.5V to 5.5V. The TPS61372L uses the peak current mode with adaptive off-time control topology to regulate the output voltage. The TPS61372L operates at a quasi-constant frequency pulse-width modulation (PWM) at moderate to heavy load current. At the beginning of each cycle, the low-side FET turns on and the inductor current ramps up to reach a peak current determined by the output of the error amplifier (EA). When the peak current pre-set value determined by the output trips of the EA, the low-side FET turns off. As long as the low-side FET turns off, the high-side FET turns on after a short delay time to avoid the shoot through. The duration of low-side FET off state is determined by the V_{IN} / V_{OUT} ratio.

High efficiency is achieved at light load as the TPS61372L operates in PFM operation. The device can be also configured at forced PWM mode to keep the frequency constant across the whole load range and to have more immunity against noise sensitive applications.

6.2 Functional Block Diagram

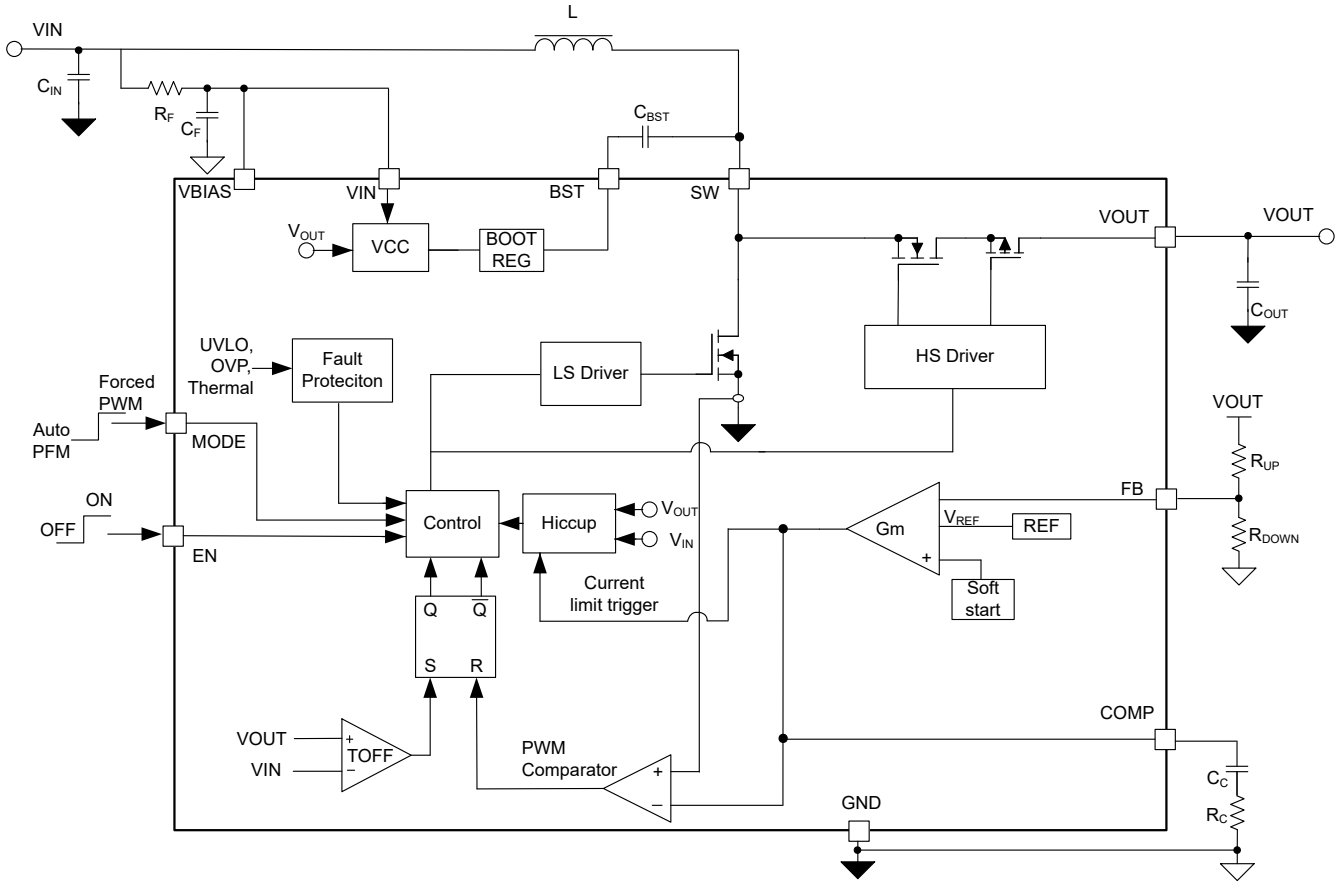

6.3 Feature Description

6.3.1 Undervoltage Lockout

The undervoltage lockout (UVLO) circuit prevents the device from malfunctioning at the low input voltage of the battery from the excessive discharge. The device starts operation once the rising V_{IN} trips the UVLO threshold and it disables the output stage of the converter once V_{IN} is below the UVLO falling threshold. If EN is in high state and V_{IN} decreases to trigger UVLO, the device discharges V_{OUT} for 90µs (typical) before shutdown.

6.3.2 Enable and Disable

When the input voltage is above the UVLO threshold and the EN pin is pulled above the high threshold (1.2V minimum), the TPS61372L is enabled. When the EN pin is pulled below the low threshold (0.4V maximum), the TPS61372L goes into shutdown mode.

6.3.3 Error Amplifier

The TPS61372L has a transconductance amplifier and compares the feedback voltage with the internal voltage reference (or the internal soft-start voltage during start-up phase). The transconductance of the error amplifier is 175µA / V typically. The loop compensation components are placed between the COMP terminal and ground to optimize the loop stability and response speed.

6.3.4 Bootstrap Voltage (BST)

The TPS61372L has an integrated bootstrap regulator and requires a small ceramic capacitor between the BST and SW pin to provide the gate drive voltage for the high-side FET. The recommended value for this ceramic capacitor is between 20nF to 200nF.

6.3.5 Load Disconnect

The TPS61372L device provides a load disconnect function, which completely disconnects the output from the input during shutdown or fault conditions.

6.3.6 Overvoltage Protection

If the output voltage is detected above the overvoltage protection threshold (typically 17.3V), the TPS61372L stops switching immediately until the voltage at the V_{OUT} pin drops below the output overvoltage protection recovery threshold (with 500mV hysteresis). This function prevents the devices against the overvoltage and secures the circuits connected with the output of excessive overvoltage.

6.3.7 Thermal Shutdown

A thermal shutdown is implemented to prevent the damage due to the excessive heat and power dissipation. Typically, the thermal shutdown occurs at the junction temperature exceeding 140°C (typical). When the thermal shutdown is triggered, the device stops switching and recovers when the junction temperature falls below 120°C (typical).

6.3.8 Start-Up

The TPS61372L implements the soft start function to reduce the inrush current during start-up. The TPS61372L begins soft start when the EN pin is pulled high. There are two phases for the start-up procedure:

- When V_{OUT} is below 120% V_{IN}, the output voltage ramps up with the switching frequency of 535kHz (typical).
- When V_{OUT} exceeds 120% V_{IN}, the switching frequency changes to 1.5MHz typically and ramps up the output voltage to the setpoint.

6.3.9 Short Protection

The TPS61372L provides a hiccup protection mode when output short protection occurs. In hiccup mode, the TPS61372L shuts down after the 1.9ms duration of current limit is triggered and the V_{OUT} is pulled below 105% V_{IN}. In hiccup steady state, the device shuts down itself and restarts after a 74ms (typical) waiting time, which helps to reduce the overall thermal dissipation at continuous short condition. After the short condition releases, the device can recover automatically and restart the start-up phase.

Copyright © 2025 Texas Instruments Incorporated

6.4 Device Functional Modes

6.4.1 Operation

In light load condition, the TPS61372L can be configured at Auto PFM or Forced PWM. At Auto PFM operation, the switching frequency is lowered at light load and features higher efficiency, while for Forced PWM operation, the frequency keeps constant across the whole load range.

6.4.2 Auto PFM Mode

The TPS61372L integrates a power-save mode with pulse frequency modulation (PFM) at light load (set the mode pin low logic or floating). The device skips the switching cycles and regulates the output voltage at a higher threshold (typically 101.6% × V_{OUT_NORM}). Figure 6-1 shows the working principle of the PFM operation. The auto PFM mode reduces the switching losses and improves efficiency at light load condition by reducing the average switching frequency.

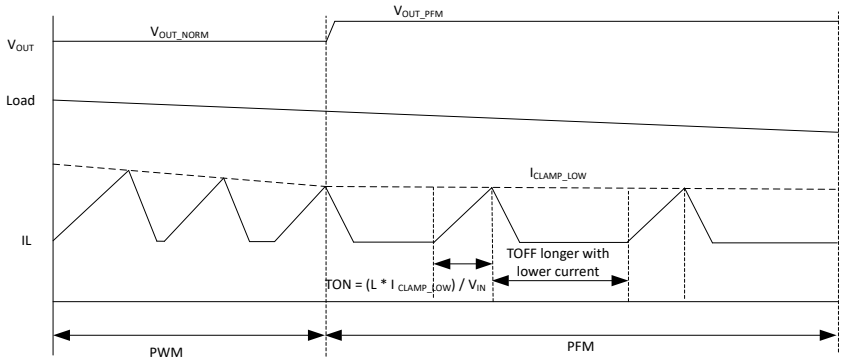

Figure 6-1. Auto PFM Operation Behavior

6.4.3 Forced PWM Mode

In forced PWM mode, the TPS61372L keeps the switching frequency constant across the whole load range. When the load current decreases, the output of the internal error amplifier decreases as well to lower the inductor peak current and delivers less power. The high-side FET is not turned off even if the current through the FET goes negative to keep the switching frequency be the same as that of the heavy load.

6.4.4 Mode Selectable

There is a mode pin to configure the TPS61372L into two different operation modes. The device works in auto PFM mode when pulling the mode pin to low or floating and in forced PWM mode when mode pin is high.

Copyright © 2025 Texas Instruments Incorporated

7 Application and Implementation

Note

Information in the following applications sections is not part of the TI component specification, and TI does not warrant its accuracy or completeness. TI's customers are responsible for determining suitability of components for their purposes, as well as validating and testing their design implementation to confirm system functionality.

7.1 Application Information

The TPS61372L is a synchronous boost converter. The following design procedure can be used to select component values for the TPS61372L. This section presents a simplified discussion of the design process. Alternately, the WEBENCH® software may be used to generate a complete design. The WEBENCH® software uses an interactive design procedure and accesses a comprehensive database of components when generating a design. This section presents a simplified discussion of the design process.

7.2 Typical Application

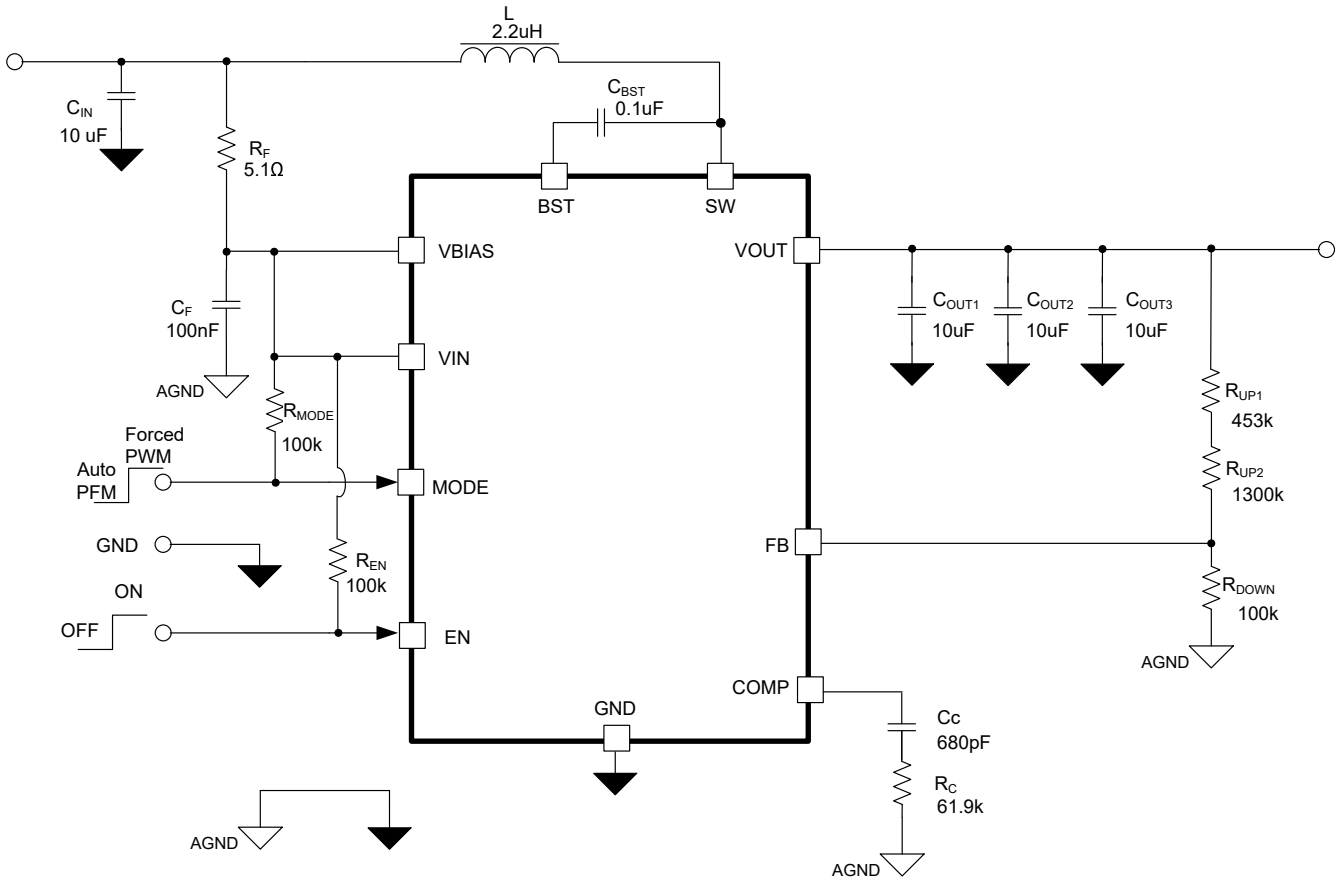

Figure 7-1. TPS61372L 12V Output With Load Disconnect Schematic

Copyright © 2025 Texas Instruments Incorporated

7.2.1 Design Requirements

For this design example, use Table 7-1 as the design parameters.

Table 7-1. Design Parameters

PARAMETER	VALUE
Input voltage range	3V to 5V
Output voltage	11V
Output ripple voltage	± 3%
Output current	0.6A
Operating frequency	1.5MHz

7.2.2 Detailed Design Procedure

7.2.2.1 Custom Design With WEBENCH® Tools

Click here to create a custom design using the TPS61372L device with the WEBENCH® Power Designer.

1. Start by entering the input voltage (V_{IN}), output voltage (V_{OUT}), and output current (I_{OUT}) requirements.
2. Optimize the design for key parameters such as efficiency, footprint, and cost using the optimizer dial.
3. Compare the generated design with other possible solutions from Texas Instruments.

The WEBENCH Power Designer provides a customized schematic along with a list of materials with real-time pricing and component availability.

In most cases, these actions are available:

- Run electrical simulations to see important waveforms and circuit performance
- Run thermal simulations to understand board thermal performance
- Export customized schematic and layout into popular CAD formats
- Print PDF reports for the design, and share the design with colleagues

Get more information about WEBENCH tools at www.ti.com/WEBENCH.

To begin the design process a few parameters must be decided upon. The designer needs to know the following:

- Input voltage range
- Output voltage
- Output ripple voltage
- Output current rating
- Operating frequency

7.2.2.2 Setting the Output Voltage

The output voltage of the TPS61372L is externally adjustable using a resistor divider network. The relationship between the output voltage and the resistor divider is given by Equation 1.

$$V_{OUT} = V_{FB} \times (1 + \frac{R_{UP}}{R_{DOWN}}) \quad (1)$$

where

- V_{OUT} is the output voltage
- R_{UP} is the top divider resistor
- R_{DOWN} is the bottom divider resistor

Choose R_{DOWN} to be approximately 100kΩ. Slightly increasing or decreasing R_{DOWN} can result in closer output voltage matching when using standard value resistors. In this design, R_{DOWN} = 100kΩ and R_{UP} = 1.853MΩ (1.3MΩ + 453kΩ) , resulting in an output voltage of 11V.

For the best accuracy, TI recommends R_{DOWN} to be around 100kΩ to enable the current to follow through R_{DOWN} is at least 100 times larger than FB pin leakage current. Changing R_{DOWN} towards the lower value

Copyright © 2025 Texas Instruments Incorporated

increases the robustness against noise injection. Changing R_{DOWN} towards the higher values reduces the quiescent current for achieving higher efficiency at the light load currents.

7.2.2.3 Selecting the Inductor

A boost converter normally requires two main passive components for storing the energy during power conversion: an inductor and an output capacitor. The inductor affects the steady state efficiency (including the ripple and efficiency) as well as the transient behavior and loop stability, which makes the inductor to be the most critical component in application.

When selecting the inductor, as well as the inductance, the other parameters of importance are:

- The maximum current rating (consider RMS and peak current)
- The series resistance
- Operating temperature

Choosing the inductor ripple current with the low ripple percentage of the average inductor current results in a larger inductance value, maximizes the potential output current of the converter, and minimizes EMI. The larger ripple results in a smaller inductance value and a physically smaller inductor, which improves transient response, but results in potentially higher EMI.

The rule of thumb in choosing the inductor is to make sure the inductor ripple current (ΔI_L) is a certain percentage of the average current. The inductance can be calculated by Equation 2, Equation 3, and Equation 4:

$$\Delta I_L = \frac{V_{IN} \times D}{L \times f_{SW}} \tag{2}$$

$$\Delta I_{L_R} = \text{Ripple\%} \times \frac{V_{OUT} \times I_{OUT}}{\eta \times V_{IN}} \tag{3}$$

$$L = \frac{1}{\text{Ripple }\%} \times \frac{\eta \times V_{IN}}{V_{OUT} \times I_{OUT}} \times \frac{V_{IN} \times D}{f_{SW}} \tag{4}$$

where

- Δ_{IL} is the peak-peak inductor current ripple
- V_{IN} is the input voltage
- D is the duty cycle
- L is the inductor
- f_{SW} is the switching frequency
- Ripple% is the ripple ration versus the DC current
- V_{OUT} is the output voltage
- I_{OUT} is the output current
- η is the efficiency

The current flowing through the inductor is the inductor ripple current plus the average input current. During power up, load faults, or transient load conditions, the inductor current can increase above the peak inductor current calculated.

Inductor values can have ±20% or even ±30% tolerance with no current bias. When the inductor current approaches the saturation level, its inductance can decrease 20% to 35% from the value at 0-A bias current depending on how the inductor vendor defines saturation. When selecting an inductor, make sure its rated current, especially the saturation current, is larger than its peak current during the operation.

Copyright © 2025 Texas Instruments Incorporated

The inductor peak current varies as a function of the load, the switching frequency, and the input and output voltages and it can be calculated by Equation 5 and Equation 6.

$$I_{PEAK} = I_{IN} + \frac{1}{2} \times \Delta I_L \tag{5}$$

where

- I_{PEAK} is the peak current of the inductor
- I_{IN} is the input average current
- ΔI_L is the ripple current of the inductor

The input DC current is determined by the output voltage, the output current, and efficiency can be calculated by:

$$I_{IN} = \frac{V_{OUT} \times I_{OUT}}{V_{IN} \times \eta} \tag{6}$$

where

- I_{IN} is the input current of the inductor
- V_{OUT} is the output voltage
- V_{IN} is the input voltage
- η is the efficiency

While the inductor ripple current depends on the inductance, the frequency, the input voltage, and duty cycle calculated by Equation 2, replace Equation 2, Equation 6 into Equation 5 to calculate the inductor peak current:

$$I_{PEAK} = \frac{I_{OUT}}{(1 - D) \times \eta} + \frac{1}{2} \times \frac{V_{IN} \times D}{L \times f_{SW}} \tag{7}$$

where

- I_{PEAK} is the peak current of the inductor
- I_{OUT} is the output current
- D is the duty cycle
- η is the efficiency
- V_{IN} is the input voltage
- L is the inductor
- f_{SW} is the switching frequency

The heat rating current (RMS) is calculated by Equation 8:

$$I_{L_RMS} = \sqrt{I_{IN}^2 + \frac{1}{12}(\Delta I_L)^2} \tag{8}$$

where

- I_{L_RMS} is the RMS current of the inductor
- I_{IN} is the input current of the inductor
- ΔI_L is the ripple current of the inductor

It is important that the peak current does not exceed the inductor saturation current and the RMS current is not over the temperature related rating current of the inductors.

For a given physical inductor size, increasing inductance usually results in an inductor with lower saturation current. The total losses of the coil consists of the DC resistance (DCR) loss and the following frequency dependent loss:

Copyright © 2025 Texas Instruments Incorporated

- The losses in the core material (magnetic hysteresis loss, especially at high switching frequencies)
- Additional losses in the conductor from the skin effect (current displacement at high frequencies)
- Magnetic field losses of the neighboring windings (proximity effect)

For a certain inductor, the larger current ripple (smaller inductor) generates the higher DC and frequency-dependent loss. An inductor with lower DCR is basically recommended for higher efficiency. However, it is usually a tradeoff between the loss and footprint.

The following inductor series in Table 7-2 from the different suppliers are recommended.

Table 7-2. Recommended Inductors for TPS61372L

PART NUMBER	L (µH)	DCR Typ (mΩ) TYP.	SATURATION CURRENT / TYP.	SIZE (L × W × H mm)	VENDOR[(1)]
XGL3512-102ME	1	28	4.5	3.5 x 3.2 x 1.2	Coilcraft
XGL3512-122ME	1.2	32.5	4.1	3.5 x 3.2 x 1.2	Coilcraft

(1) See the *Third-party Products Disclaimer*.

7.2.2.4 Selecting the Output Capacitors

The output capacitor is mainly selected to meet the requirements at load transient or steady state. Then the loop is compensated for the output capacitor selected. The output ripple voltage is related to the equivalent series resistance (ESR) of the capacitor and its capacitance. Assuming a capacitor with zero ESR, the minimum capacitance needed for a given ripple can be calculated by Equation 9:

$$C_{OUT} = \frac{I_{OUT} \times (V_{OUT} - V_{IN})}{f_{SW} \times \Delta V \times V_{OUT}} \tag{9}$$

where

- C_{OUT} is the output capacitor
- I_{OUT} is the output current
- V_{OUT} is the output voltage
- V_{IN} is the input voltage
- Δ_V is the output voltage ripple required
- f_{SW} is the switching frequency

The additional output ripple component caused by ESR is calculated by Equation 10:

$$\Delta V_{ESR} = I_{OUT} \times R_{ESR} \tag{10}$$

where

- ΔV_{ESR} is the output voltage ripple caused by ESR
- R_{ESR} is the resistor in series with the output capacitor

For the ceramic capacitor, the ESR ripple can be neglected. However, for the tantalum or electrolytic capacitors, it must be considered if used.

Care must be taken when evaluating the rating of a ceramic capacitor under the DC bias. Ceramic capacitors can derate by as much as 70% of its capacitance at its rated voltage. Therefore, consider that there are enough margins on the voltage rating to make sure that there is adequate capacitance at the required output voltage.

Table 7-3. Recommended Output Capacitor for TPS61372L

PART NUMBER	C (µF)	PIECES	DESCRIPTION	SIZE	VENDOR[(1)]
GRM188R61E106MA73D	10	3	X5R, 0603, 5 V, ±20% tolerance	0603	Murata

Copyright © 2025 Texas Instruments Incorporated

7.2.2.5 Selecting the Input Capacitors

Multilayer ceramic capacitors are an excellent choice for the input decoupling of the step-up converter as they have extremely low ESR and are available in small footprints. Place the input capacitors as close as possible to the device.

Take care when using only ceramic input capacitors. When a ceramic capacitor is used at the input and the power is being supplied through long wires, such as from a wall adapter, a load step at the output can induce ringing at the V_{IN} pin. This ringing can couple to the output and be mistaken as loop instability or can even damage the part. Place additional "bulk" capacitance (electrolytic or tantalum) in this circumstance, between C_{IN} and the power source lead, to reduce ringing that can occur between the inductance of the power source leads and C_{IN}.

7.2.2.6 Loop Stability and Compensation

7.2.2.6.1 Small Signal Model

The TPS61372L uses the peak current with adaptive off-time control topology. With the inductor current information sensed, the small-signal model of the power stage reduces from a two-pole system, created by L and C_{OUT}, to a single-pole system, created by R_{OUT} and C_{OUT}. An external loop compensation network connecting to the COMP pin of TPS61372L is added to optimize the loop stability and the response time, a resistor R_C, capacitor C_C, and C_P shown in Figure 7-2 comprises the loop compensation network.

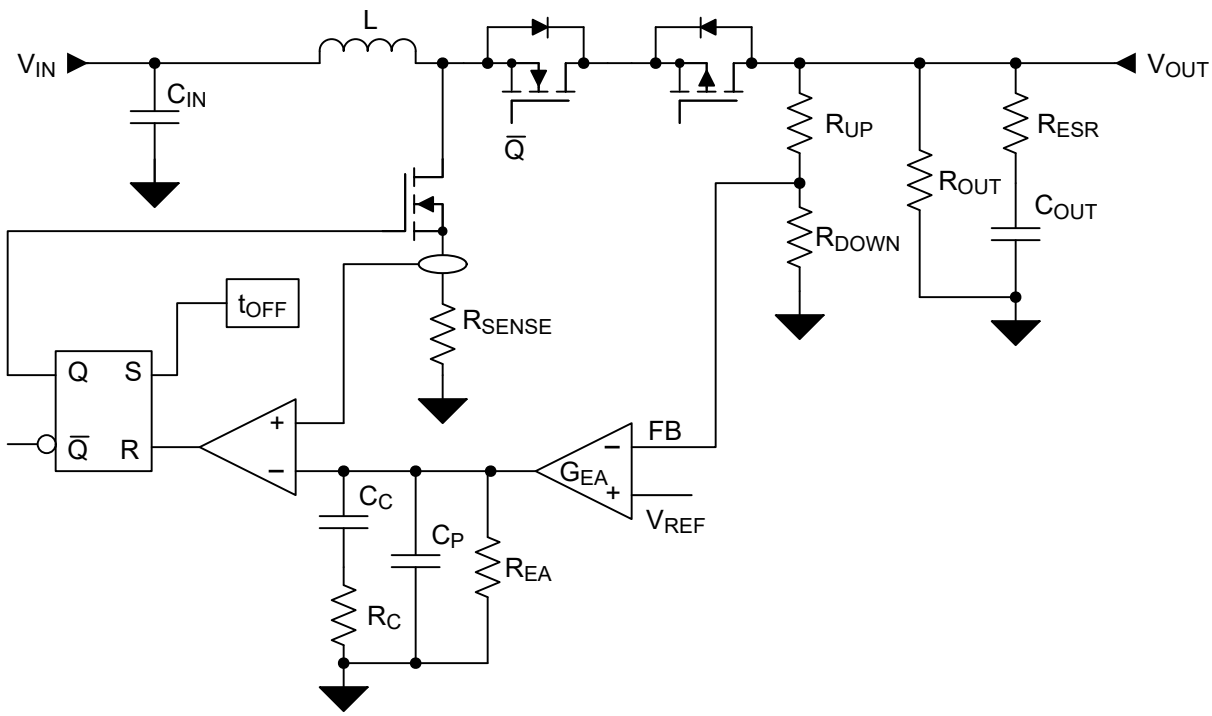

Figure 7-2. TPS61372L Control Equivalent Circuitry Model

The small signal of power stage including the slope compensation is:

$$G_{PS}(S) = \frac{R_{OUT} \times (1-D)}{2 \times R_{SENSE}} \times \frac{\left(1 + \frac{S}{2\pi \times f_{ESR}}\right)\left(1 - \frac{S}{2\pi \times f_{RHP}}\right)}{1 + \frac{S}{2\pi \times f_P}} \tag{11}$$

where

- D is the duty cycle

- R_{OUT} is the output load resistor
- R_{SENSE} is the equivalent internal current sense resistor, which is typically 0.2Ω of TPS61372L

The single pole of the power stage is:

$$f_P = \frac{2}{2\pi \times R_{OUT} \times C_{OUT}} \tag{12}$$

where

- C_{OUT} is the output capacitance, for a boost converter having multiple, identical output capacitors in parallel, simply combine the capacitors with the equivalent capacitance

The zero created by the ESR of the output capacitor is:

$$f_{ESR} = \frac{1}{2\pi \times R_{ESR} \times C_{OUT}} \tag{13}$$

where

- R_{ESR} is the equivalent resistance in series of the output capacitor

The right-hand plane zero is:

$$f_{RHP} = \frac{R_{OUT} \times (1 - D)^2}{2\pi \times L} \tag{14}$$

where

- D is the duty cycle
- R_{OUT} is the output load resistor
- L is the inductance

The TPS61372L COMP pin is the output of the internal trans-conductance amplifier.

Equation 15 shows the equation for feedback resistor network and the error amplifier.

$$H_{EA}(S) = G_{EA} \times R_{EA} \times \frac{R_{DOWN}}{R_{UP} + R_{DOWN}} \times \frac{1 + \frac{S}{2 \times \pi \times f_Z}}{(1 + \frac{S}{2 \times \pi \times f_{P1}}) \times (1 + \frac{S}{2 \times \pi \times f_{P2}})} \tag{15}$$

where

- R_{EA} is the output impedance of the error amplifier R_{EA} = 500 MΩ. G_{EA} is the transconductance of the error amplifier, G_{EA} = 175µS.
- f_{P1}, f_{P2} is the frequency of the pole of the compensation
- f_Z is the zero's frequency of the compensation network

$$f_{P1} = \frac{1}{2\pi \times R_{EA} \times C_c} \tag{16}$$

where

- C_C is the zero capacitor compensation

Copyright © 2025 Texas Instruments Incorporated

$$f_{P2} = \frac{1}{2\pi \times R_C \times C_P} \tag{17}$$

where

- C_P is the pole capacitor compensation
- R_C is the resistor of the compensation network

$$f_Z = \frac{1}{2\pi \times R_C \times C_C} \tag{18}$$

7.2.2.7 Loop Compensation Design Steps

With the small signal models coming out, the next step is to calculate the compensation network parameters with the given inductor and output capacitance.

1. **Set the Crossover Frequency, f_C .**
   - The first step is to set the loop crossover frequency, f_C. The higher crossover frequency, the faster the loop response is. It is generally accepted that the loop gain cross over no higher than the lower of either 1/10 of the switching frequency, f_{SW}, or 1/5 of the RHPZ frequency, f_{RHPZ}. Then calculate the loop compensation network values of R_c, C_c, and C_p in following sections.
2. **Set the Compensation Resistor, R_C .**
   - By placing f_Z below f_C, for frequencies above f_C, R_C | | R_{EA} approximately = R_C, so $R_C \times G_{EA}$ sets the compensation gain. Setting the compensation gain, $K_{COMP\text{-}dB}$, at f_Z, results in the total loop gain, $T_{(s)}$ = $G_{PS(s)} \times H_{EA(s)} \times He(s)$ being zero at f_C.
   - Therefore, to approximate a single-pole rolloff up to f_{P2}, rearrange Equation 19 to solve for RC so that the compensation gain, K_{EA}, at f_C is the negative of the gain, K_{PS}, read at frequency f_C for the power stage bode plot or more simply:

$$K_{EA}(f_C) = 20 \times \log(G_{EA} \times R_C \times \frac{R_{DOWN}}{R_{UP} + R_{DOWN}}) = -K_{PS}(f_C) \tag{19}$$

     where

     – K_{EA} is gain of the error amplifier network
     – K_{PS} is the gain of the power stage
     – G_{EA} is the transconductance of the amplifier, the typical value of G_{EA} = 175µA / V
3. **Set the compensation zero capacitor, C_C .**
   - Place the compensation zero at the power stage pole position of R_{OUT}, C_{OUT} to get:

$$f_Z = \frac{1}{2\pi \times R_C \times C_C} \tag{20}$$

   - Set $f_Z = f_P$, and get:

$$C_C = \frac{R_{OUT} \times C_{OUT}}{2R_C} \tag{21}$$

4. **Set the compensation pole capacitor, C_P .**
   - Place the compensation pole at the zero produced by the R_{ESR} and the C_{OUT}. The compensation pole is useful for canceling unhelpful effects of the ESR zero.

$$f_{P2} = \frac{1}{2\pi \times R_C \times C_P} \tag{22}$$

$$f_{ESR} = \frac{1}{2\pi \times R_{ESR} \times C_{OUT}} \tag{23}$$

- Set $f_{P2} = f_{ESR}$, and get:

$$C_P = \frac{R_{ESR} \times C_{OUT}}{R_C} \tag{24}$$

- If the calculated value of C_P is less than 10pF, it can be neglected.

Designing the loop for greater than 45° of phase margin and greater than 6-dB gain margin eliminates output voltage ringing during the line and load transient. The R_C = 61.9kΩ , C_C = 680pF for this design example.

7.2.2.8 Selecting the Bootstrap Capacitor

The bootstrap capacitor between the BST and SW pin supplies the gate current to charge the high-side FET device gate during the turnon of each cycle and also supplies charge for the bootstrap capacitor. The recommended value of the bootstrap capacitor is 20nF to 200nF. To minimize potentially damaging voltage transients caused by trace inductance, use a high-quality, low-ESR C_{BST} ceramic capacitor at the device pins.

7.2.3 Application Curves

Typical condition V_{IN} = 3V to 5V, V_{OUT} = 11V, temperature = 25°C, unless otherwise noted

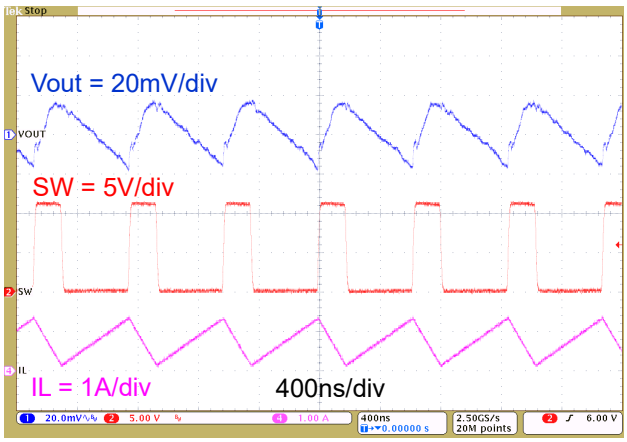

V_{IN} = 3.3V
L = 1µH
V_{OUT} = 11V
C_{OUT} = 3 × 10µF
Mode = Auto PFM

Figure 7-3. Steady-State at 200mA Load

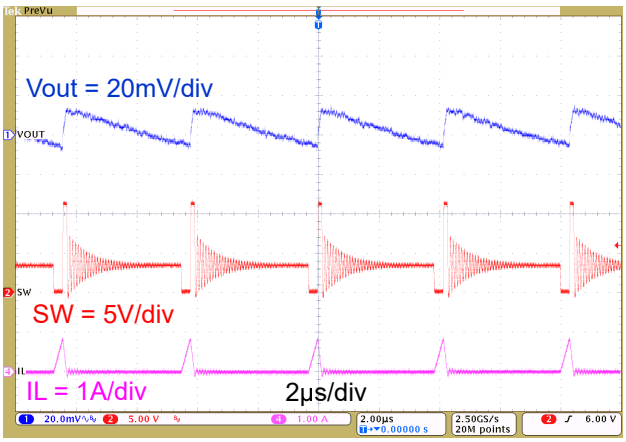

V_{IN} = 3.3V
L = 1µH
V_{OUT} = 11V
C_{OUT} = 3 × 10µF
Mode = Auto PFM

Figure 7-4. Steady-State at 10mA Load

Copyright © 2025 Texas Instruments Incorporated

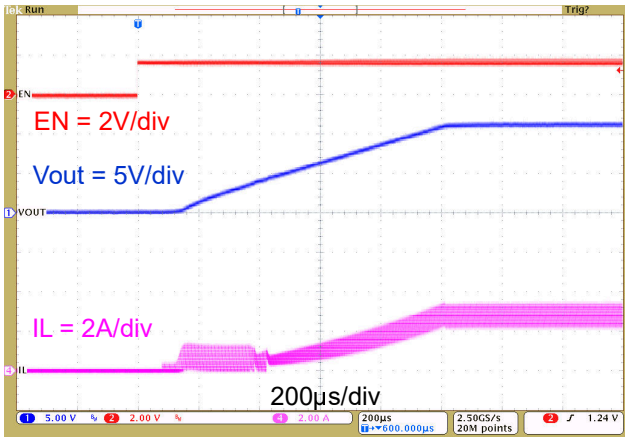

V_{IN} = 3.3V V_{OUT} = 11V Mode = Auto PFM
L = 1µH C_{OUT} = 3 × 10µF

Figure 7-5. Start-Up by EN, Load = 16Ω

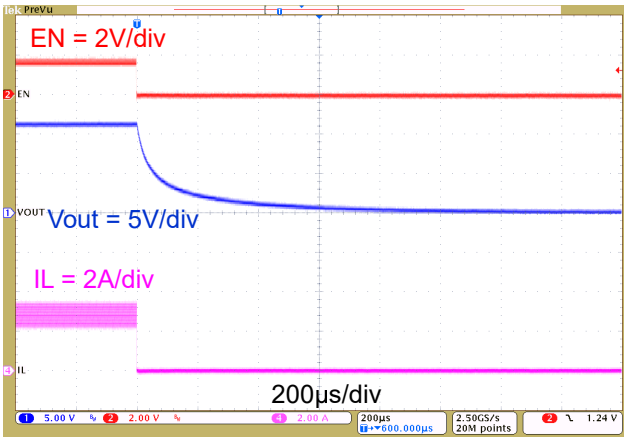

V_{IN} = 3.3V V_{OUT} = 11V Mode = Auto PFM
L = 1µH C_{OUT} = 3 × 10µF

Figure 7-6. Shutdown by EN, Load = 16Ω

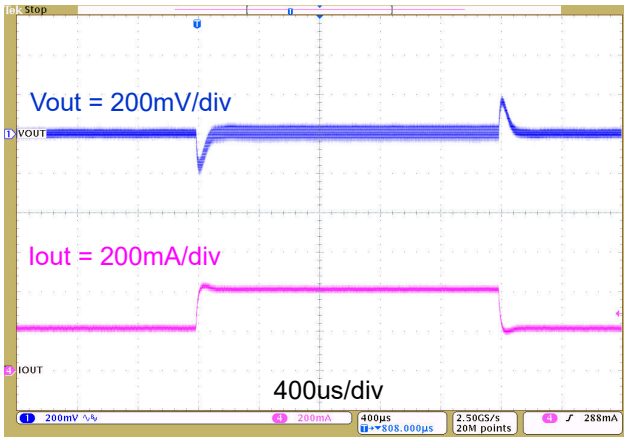

V_{IN} = 3.3V V_{OUT} = 11V Mode = Auto PFM
L = 1µH C_{OUT} = 3 × 10µF

Figure 7-7. Load Transient, 200mA to 400mA, 100mA / µs

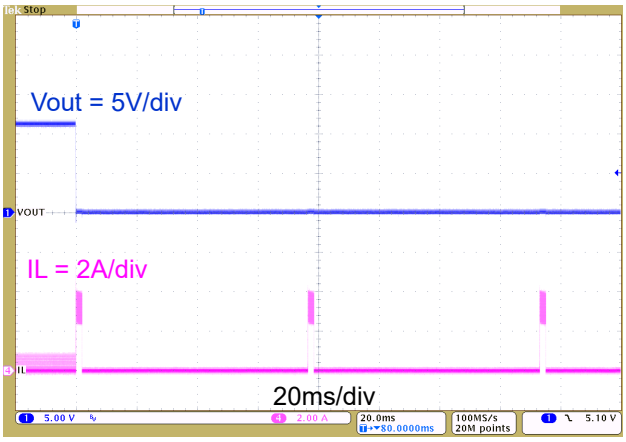

V_{IN} = 3.3V V_{OUT} = 11V Mode = Auto PFM
L = 1µH C_{OUT} = 3 × 10µF

Figure 7-8. Shorted Output

7.3 Power Supply Recommendations

The devices are designed to operate from an input voltage supply ranging from 2.5V to 5.5V. This input supply must be well regulated. If the input supply is located more than a few inches from the TPS61372L, the bulk capacitance can be required in addition to the ceramic bypass capacitors. An electrolytic capacitor with a value of 47µF is a typical choice.

7.4 Layout

7.4.1 Layout Guidelines

The basic PCB board layout requires a separation of sensitive signal and power paths. If the layout is not carefully done, the regulator can suffer from the instability or noise problems.

The following checklist is suggested that be followed to get good performance for a well-designed board:

1. Minimize the high current path from output of chip, the output capacitor to the GND of chip. This loop contains high di / dt switching currents (nano seconds per ampere) and easy to transduce the high frequency noise.

Copyright © 2025 Texas Instruments Incorporated

2. Minimize the length and area of all traces connected to the SW pin, and always use a ground plane under the switching regulator to minimize inter plane coupling.
3. Use a combination of bulk capacitors and smaller ceramic capacitors with low series resistance for the input and output capacitors. Place the smaller capacitors closer to the IC to provide a low impedance path for decoupling the noise.
4. The ground area near the IC must provide adequate heat dissipating area. Connect the wide power bus (for example, V_{OUT}, SW, GND) to the large area of copper, or to the bottom or internal layer ground plane, using vias for enhanced thermal dissipation.
5. Place the input capacitor being close to the inductor and the device GND pin in order to reduce the input supply ripple.
6. Place the noise sensitive network like the feedback and compensation being far away from the SW trace.
7. Use a separate ground trace to connect the VIN pin capacitors, the feedback and the loop compensation circuitry. Connect this ground trace to the main power ground at a single point to minimize circulating currents.

7.4.2 Layout Example

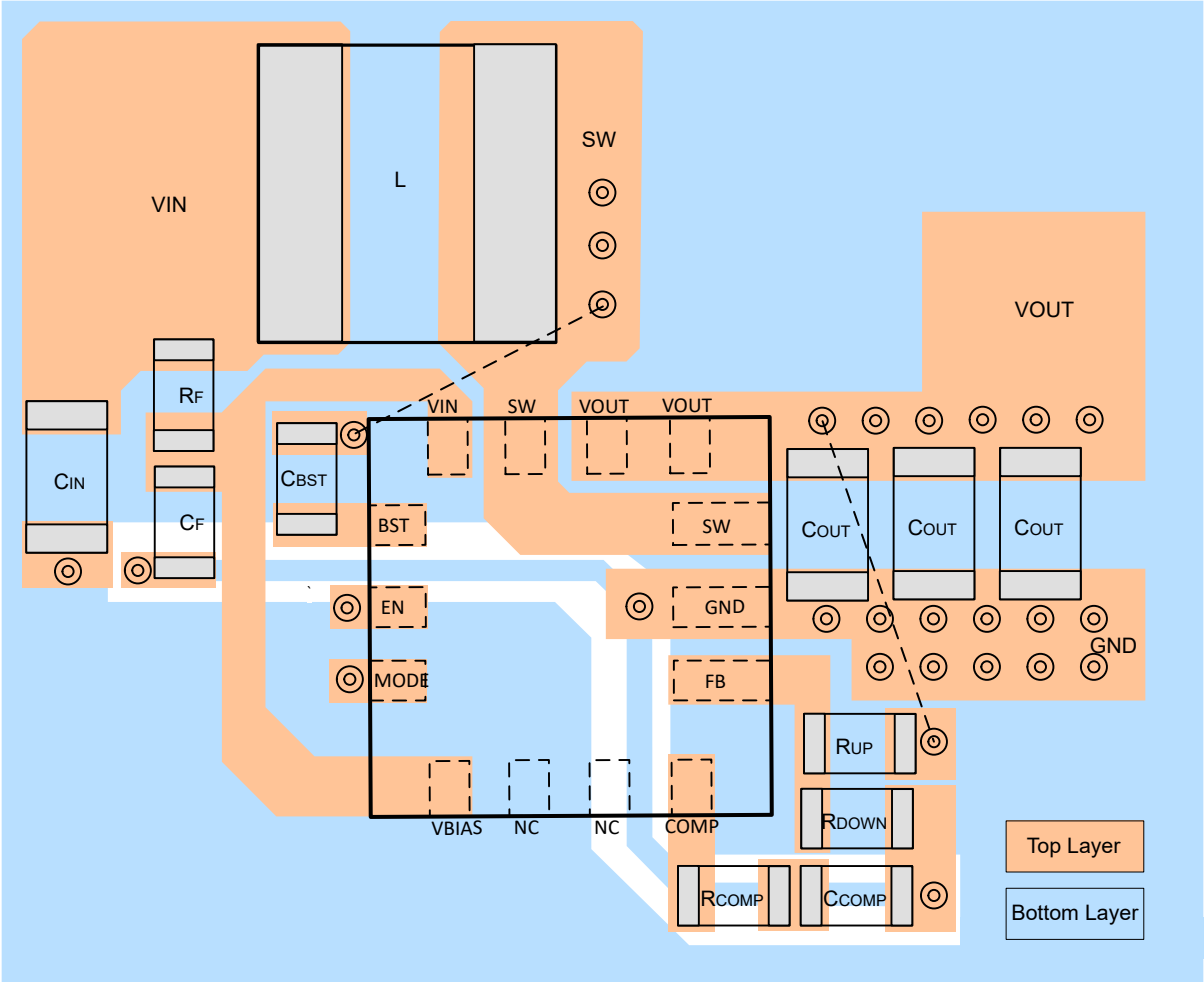

Figure 7-9. Recommended Layout

Copyright © 2025 Texas Instruments Incorporated

7.4.2.1 Thermal Considerations

Implementation of integrated circuits in low-profile and fine-pitch surface-mount packages typically requires special attention to power dissipation. Many system-dependent issues such as thermal coupling, airflow, added heat sinks and convection surfaces, and the presence of other heat-generating components affect the power dissipation limits of a given component.

Two basic approaches for enhancing thermal performance are listed below:

- Improving the power dissipation capability of the PCB design
- Improving the thermal coupling of the component to the PCB

As power demand in portable designs is more and more important, designers must figure the best trade-off between efficiency, power dissipation and solution size. Due to integration and miniaturization, junction temperature can increase significantly which has the ability to lead to bad application behaviors (that is, premature thermal shutdown or worst case reduce device reliability). Junction-to-ambient thermal resistance is highly application and board-layout dependent. In applications where high maximum power dissipation exists, special care must be paid to thermal dissipation issues in board design. Keep the device operating junction temperature (T_J) below 125°C.

Copyright © 2025 Texas Instruments Incorporated

8 Device and Documentation Support

8.1 Device Support

8.1.1 Third-Party Products Disclaimer

TI'S PUBLICATION OF INFORMATION REGARDING THIRD-PARTY PRODUCTS OR SERVICES DOES NOT CONSTITUTE AN ENDORSEMENT REGARDING THE SUITABILITY OF SUCH PRODUCTS OR SERVICES OR A WARRANTY, REPRESENTATION OR ENDORSEMENT OF SUCH PRODUCTS OR SERVICES, EITHER ALONE OR IN COMBINATION WITH ANY TI PRODUCT OR SERVICE.

8.1.2 Development Support

8.1.2.1 Custom Design With WEBENCH® Tools

Click here to create a custom design using the TPS61372L device with the WEBENCH® Power Designer.

1. Start by entering the input voltage (V_{IN}), output voltage (V_{OUT}), and output current (I_{OUT}) requirements.
2. Optimize the design for key parameters such as efficiency, footprint, and cost using the optimizer dial.
3. Compare the generated design with other possible solutions from Texas Instruments.

The WEBENCH Power Designer provides a customized schematic along with a list of materials with real-time pricing and component availability.

In most cases, these actions are available:

- Run electrical simulations to see important waveforms and circuit performance
- Run thermal simulations to understand board thermal performance
- Export customized schematic and layout into popular CAD formats
- Print PDF reports for the design, and share the design with colleagues

Get more information about WEBENCH tools at www.ti.com/WEBENCH.

8.2 Receiving Notification of Documentation Updates

To receive notification of documentation updates, navigate to the device product folder on ti.com. Click on *Notifications* to register and receive a weekly digest of any product information that has changed. For change details, review the revision history included in any revised document.

8.3 Support Resources

TI E2E™ support forums are an engineer's go-to source for fast, verified answers and design help — straight from the experts. Search existing answers or ask your own question to get the quick design help you need.

Linked content is provided "AS IS" by the respective contributors. They do not constitute TI specifications and do not necessarily reflect TI's views; see TI's Terms of Use.

8.4 Trademarks

HotRod™ and TI E2E™ are trademarks of Texas Instruments.
WEBENCH® is a registered trademark of Texas Instruments.
All trademarks are the property of their respective owners.

8.5 Electrostatic Discharge Caution

This integrated circuit can be damaged by ESD. Texas Instruments recommends that all integrated circuits be handled with appropriate precautions. Failure to observe proper handling and installation procedures can cause damage.

ESD damage can range from subtle performance degradation to complete device failure. Precision integrated circuits may be more susceptible to damage because very small parametric changes could cause the device not to meet its published specifications.

8.6 Glossary

TI Glossary — This glossary lists and explains terms, acronyms, and definitions.

Copyright © 2025 Texas Instruments Incorporated

9 Revision History

NOTE: Page numbers for previous revisions may differ from page numbers in the current version.

Changes from Revision * (April 2025) to Revision A (June 2025)	Page
• Change Rtheta-JA from 87.1 to 75.4	5
• Change Rtheta-JC(top) from 0.7 to 46.4	5
• Change Rtheta-JB from 24.1 to 25.0	5
• Change Psi-JT from 0.4 to 1.8	5
• Change Psi-JB from 24.3 to 25.1	5

10 Mechanical, Packaging, and Orderable Information

The following pages include mechanical, packaging, and orderable information. This information is the most current data available for the designated devices. This data is subject to change without notice and revision of this document. For browser-based versions of this data sheet, refer to the left-hand navigation.

PACKAGING INFORMATION

Orderable part number	Status (1)	Material type (2)	Package | Pins	Package qty | Carrier	RoHS (3)	Lead finish/ Ball material (4)	MSL rating/ Peak reflow (5)	Op temp (°C)	Part marking (6)
TPS61372LVARR	Active	Production	WQFN-HR (VAR) | 14	3000 | LARGE T&R	Yes	SN	Level-2-260C-1 YEAR	-40 to 125	372L

(1) **Status:** For more details on status, see our product life cycle.

(2) **Material type:** When designated, preproduction parts are prototypes/experimental devices, and are not yet approved or released for full production. Testing and final process, including without limitation quality assurance, reliability performance testing, and/or process qualification, may not yet be complete, and this item is subject to further changes or possible discontinuation. If available for ordering, purchases will be subject to an additional waiver at checkout, and are intended for early internal evaluation purposes only. These items are sold without warranties of any kind.

(3) **RoHS values:** Yes, No, RoHS Exempt. See the TI RoHS Statement for additional information and value definition.

(4) **Lead finish/Ball material:** Parts may have multiple material finish options. Finish options are separated by a vertical ruled line. Lead finish/Ball material values may wrap to two lines if the finish value exceeds the maximum column width.

(5) **MSL rating/Peak reflow:** The moisture sensitivity level ratings and peak solder (reflow) temperatures. In the event that a part has multiple moisture sensitivity ratings, only the lowest level per JEDEC standards is shown. Refer to the shipping label for the actual reflow temperature that will be used to mount the part to the printed circuit board.

(6) **Part marking:** There may be an additional marking, which relates to the logo, the lot trace code information, or the environmental category of the part.

Multiple part markings will be inside parentheses. Only one part marking contained in parentheses and separated by a "~" will appear on a part. If a line is indented then it is a continuation of the previous line and the two combined represent the entire part marking for that device.

Important Information and Disclaimer: The information provided on this page represents TI's knowledge and belief as of the date that it is provided. TI bases its knowledge and belief on information provided by third parties, and makes no representation or warranty as to the accuracy of such information. Efforts are underway to better integrate information from third parties. TI has taken and continues to take reasonable steps to provide representative and accurate information but may not have conducted destructive testing or chemical analysis on incoming materials and chemicals. TI and TI suppliers consider certain information to be proprietary, and thus CAS numbers and other limited information may not be available for release.

In no event shall TI's liability arising out of such information exceed the total purchase price of the TI part(s) at issue in this document sold by TI to Customer on an annual basis.

TAPE AND REEL INFORMATION

REEL DIMENSIONS

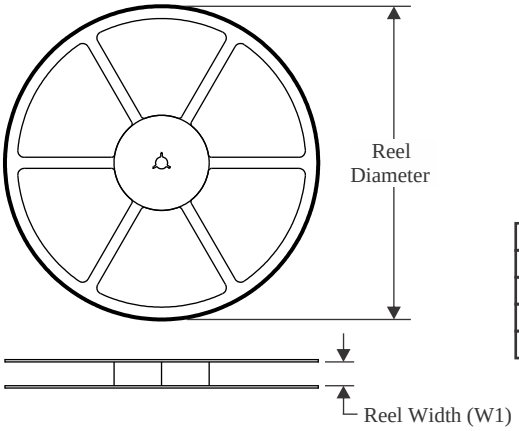

TAPE DIMENSIONS

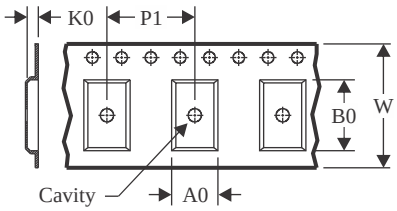

A0	Dimension designed to accommodate the component width
B0	Dimension designed to accommodate the component length
K0	Dimension designed to accommodate the component thickness
W	Overall width of the carrier tape
P1	Pitch between successive cavity centers

QUADRANT ASSIGNMENTS FOR PIN 1 ORIENTATION IN TAPE

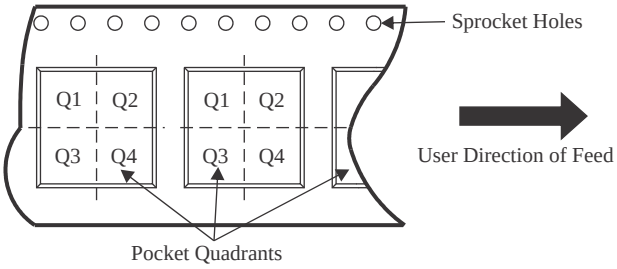

*All dimensions are nominal

Device	Package Type	Package Drawing	Pins	SPQ	Reel Diameter (mm)	Reel Width W1 (mm)	A0 (mm)	B0 (mm)	K0 (mm)	P1 (mm)	W (mm)	Pin1 Quadrant
TPS61372LVARR	WQFN-HR	VAR	14	3000	180.0	8.4	2.8	2.8	1.0	4.0	8.0	Q2

TAPE AND REEL BOX DIMENSIONS

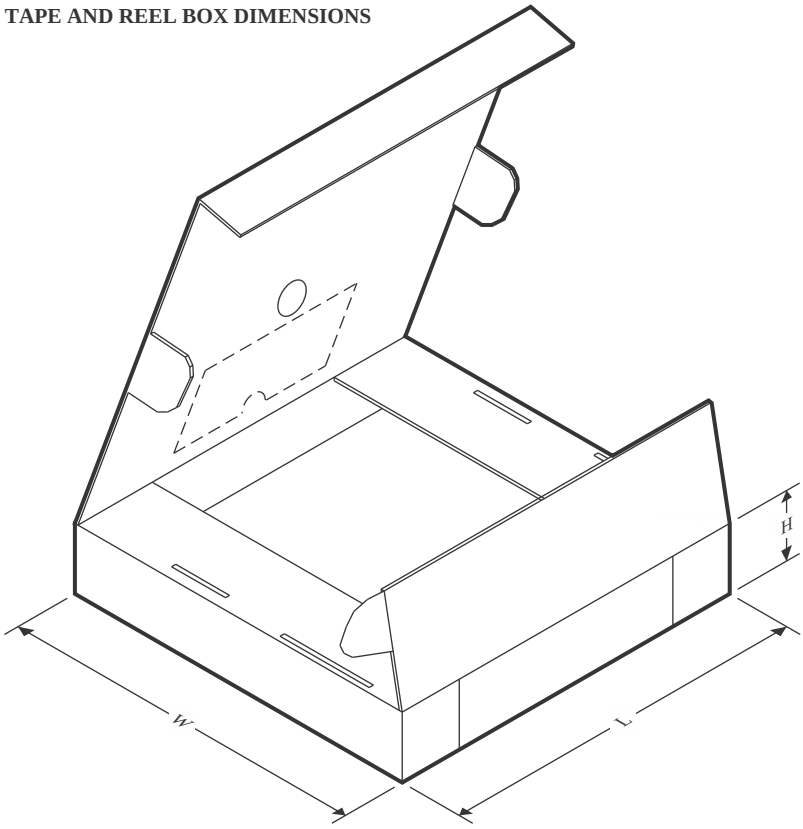

*All dimensions are nominal

Device	Package Type	Package Drawing	Pins	SPQ	Length (mm)	Width (mm)	Height (mm)
TPS61372LVARR	WQFN-HR	VAR	14	3000	210.0	185.0	35.0

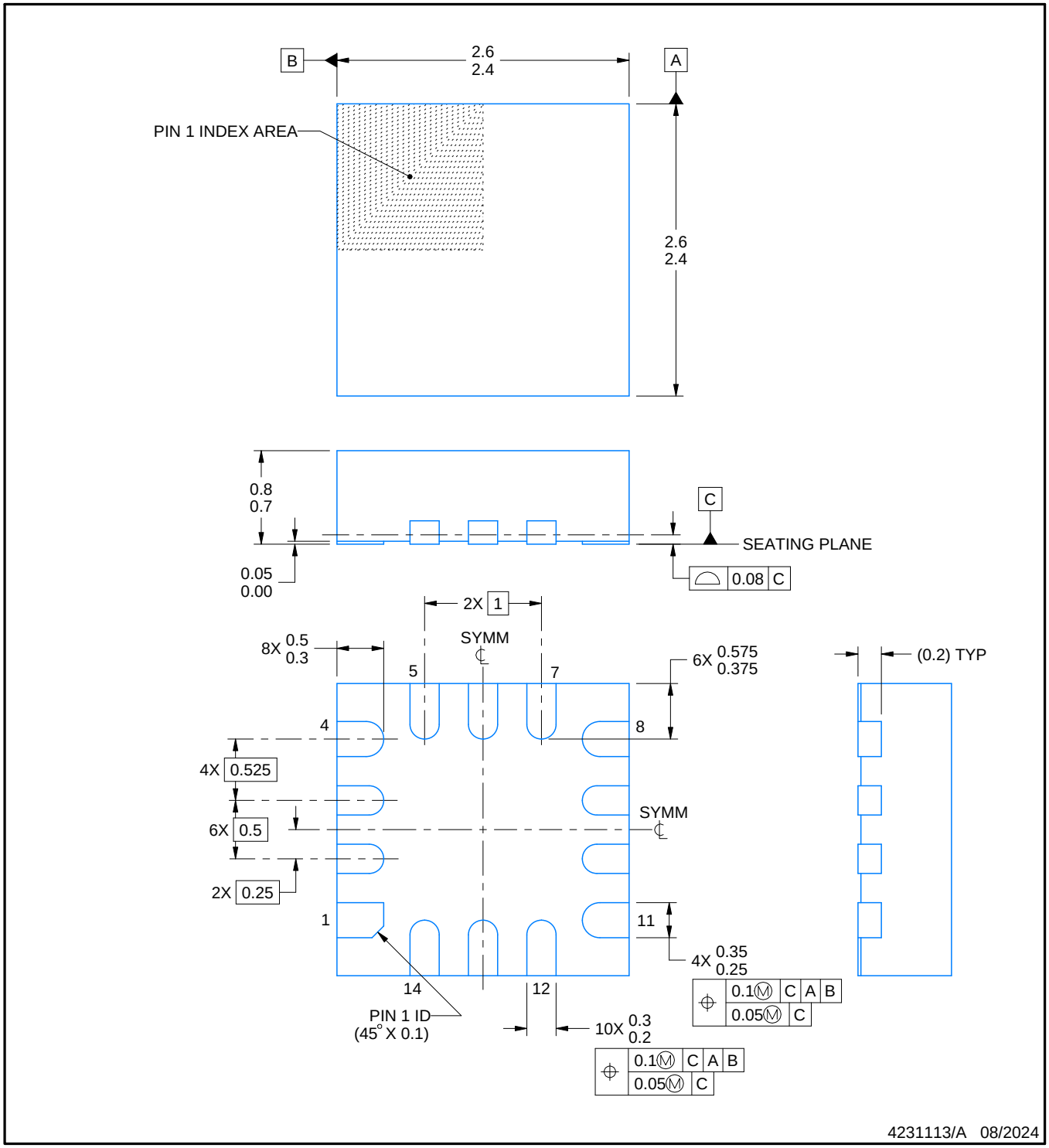

NOTES:

1. All linear dimensions are in millimeters. Any dimensions in parenthesis are for reference only. Dimensioning and tolerancing per ASME Y14.5M.
2. This drawing is subject to change without notice.

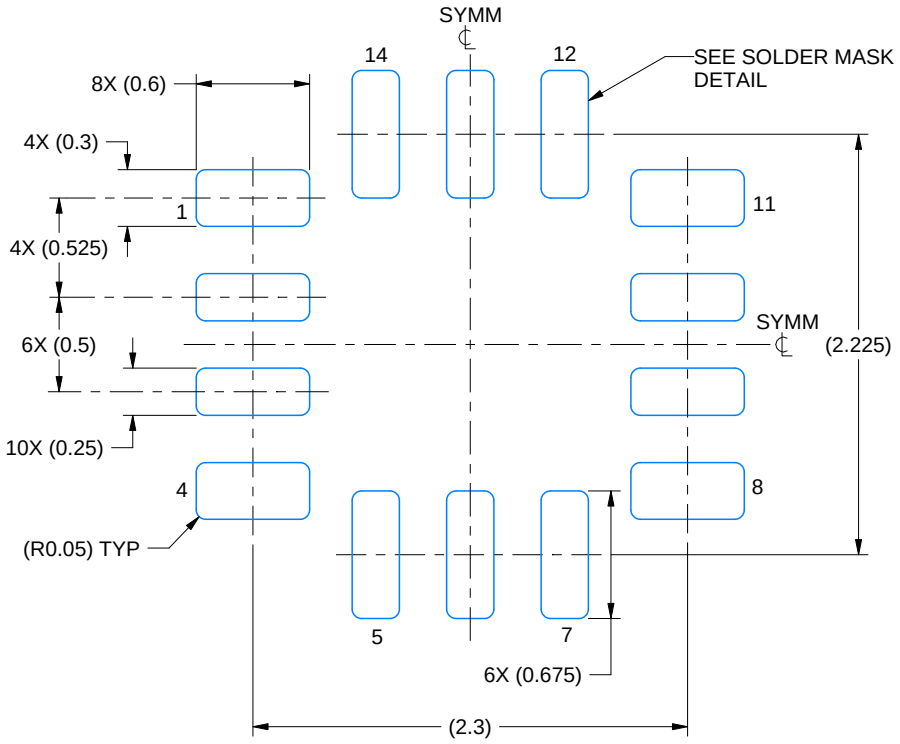

LAND PATTERN EXAMPLE
EXPOSED METAL SHOWN
SCALE: 25X

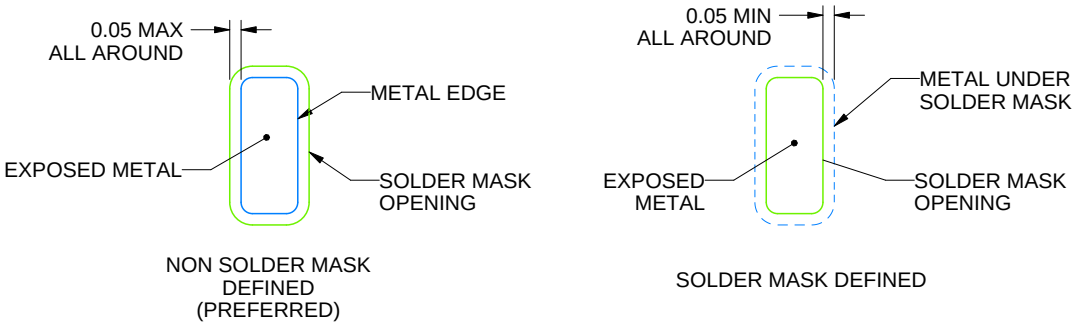

SOLDER MASK DETAILS

4231113/A 08/2024

NOTES: (continued)

3. For more information, see Texas Instruments literature number SLUA271 (www.ti.com/lit/slua271).

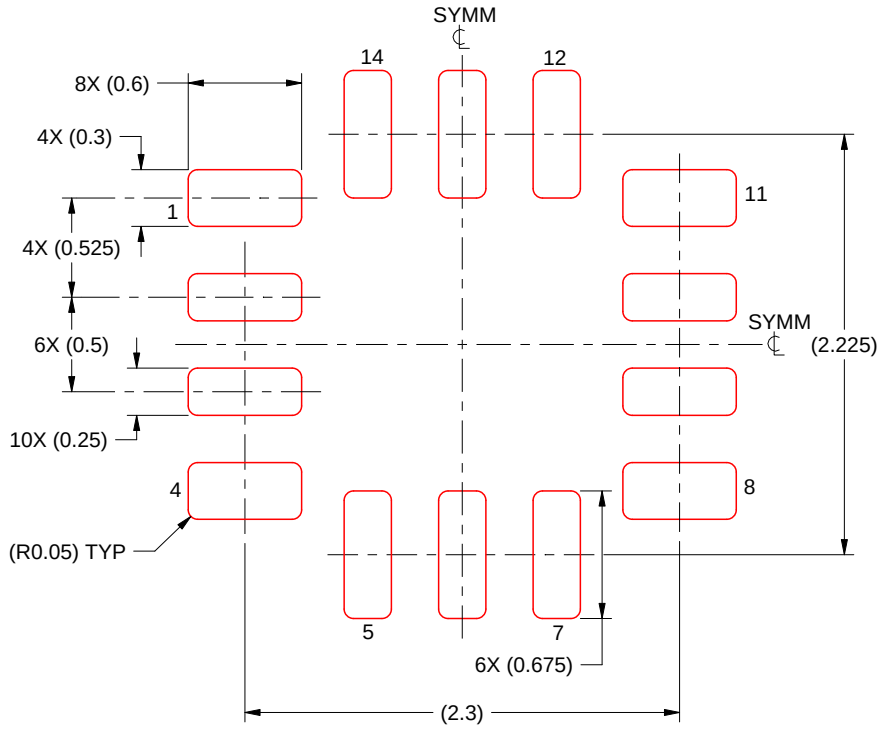

SOLDER PASTE EXAMPLE
BASED ON 0.125 MM THICK STENCIL
SCALE: 25X

4231113/A 08/2024

NOTES: (continued)

4. Laser cutting apertures with trapezoidal walls and rounded corners may offer better paste release. IPC-7525 may have alternate design recommendations.

IMPORTANT NOTICE AND DISCLAIMER

TI PROVIDES TECHNICAL AND RELIABILITY DATA (INCLUDING DATA SHEETS), DESIGN RESOURCES (INCLUDING REFERENCE DESIGNS), APPLICATION OR OTHER DESIGN ADVICE, WEB TOOLS, SAFETY INFORMATION, AND OTHER RESOURCES “AS IS” AND WITH ALL FAULTS, AND DISCLAIMS ALL WARRANTIES, EXPRESS AND IMPLIED, INCLUDING WITHOUT LIMITATION ANY IMPLIED WARRANTIES OF MERCHANTABILITY, FITNESS FOR A PARTICULAR PURPOSE OR NON-INFRINGEMENT OF THIRD PARTY INTELLECTUAL PROPERTY RIGHTS.

These resources are intended for skilled developers designing with TI products. You are solely responsible for (1) selecting the appropriate TI products for your application, (2) designing, validating and testing your application, and (3) ensuring your application meets applicable standards, and any other safety, security, regulatory or other requirements.

These resources are subject to change without notice. TI grants you permission to use these resources only for development of an application that uses the TI products described in the resource. Other reproduction and display of these resources is prohibited. No license is granted to any other TI intellectual property right or to any third party intellectual property right. TI disclaims responsibility for, and you will fully indemnify TI and its representatives against, any claims, damages, costs, losses, and liabilities arising out of your use of these resources.

TI’s products are provided subject to TI’s Terms of Sale or other applicable terms available either on ti.com or provided in conjunction with such TI products. TI’s provision of these resources does not expand or otherwise alter TI’s applicable warranties or warranty disclaimers for TI products.

TI objects to and rejects any additional or different terms you may have proposed.

Mailing Address: Texas Instruments, Post Office Box 655303, Dallas, Texas 75265
Copyright © 2025, Texas Instruments Incorporated