TPS389x Single-Channel, Adjustable Voltage Monitor in Ultra-Small Package

1 Features

- Very Small USON (1.45 mm × 1.00 mm) Package
- Adjustable Threshold Down to 500 mV
- Threshold Accuracy: 1% Over Temperature
- Capacitor-Adjustable Delay Time
- Low Quiescent Current: 6 µA (Typical)
- External Enable Input
- Open-Drain (Rated at 18 V) and Push-Pull Output Options
- Temperature Range: –40°C to 125°C
- Pin-for-Pin Compatible With MAX6895/6/7/8

2 Applications

- DSPs, Microcontrollers, and Microprocessors
- Notebook and Desktop Computers
- PDAs and Handheld Products
- Portable and Battery-Powered Products
- FPGAs and ASICs

3 Description

The TPS3895, TPS3896, TPS3897, and TPS3898 devices (TPS389x) are a family of very small supervisory circuits that monitor voltages greater than 500 mV with a 0.25% (typical) threshold accuracy and offer adjustable delay time using external capacitors. The TPS389x family also has a logic enable pin (ENABLE or $\overline{\text{ENABLE}}$) to power on and off the output. With the TPS3895, for example, when the input voltage pin (SENSE) rises above the threshold, and the ENABLE pin is high, then the output pin (SENSE_OUT) goes high after the capacitor-adjustable delay time. When SENSE falls below the threshold or ENABLE is low, then SENSE_OUT goes low. For truth tables, see Table 1 and Table 2.

For TPS389xA versions, both SENSE and ENABLE have a capacitor-adjustable delay. The output asserts after this capacitor-adjustable delay when both SENSE and ENABLE inputs are good. The TPS389xP devices have a small, 0.2-µs propagation delay from when the enable pin asserts to when the output pin asserts, provided SENSE is above the threshold.

All devices operate from 1.7 V to 6.5 V and have a typical quiescent current of 6 µA with an open-drain output rated at 18 V. The TPS389x is available in an ultra-small USON package and is fully specified over the temperature range of T_J = –40°C to 125°C.

Device Information(1)

PART NUMBER	PACKAGE	BODY SIZE (NOM)
TPS389x	USON (6)	1.45 mm × 1.00 mm

(1) For all available packages, see the orderable addendum at the end of the data sheet.

Sense Threshold Voltage vs Temperature

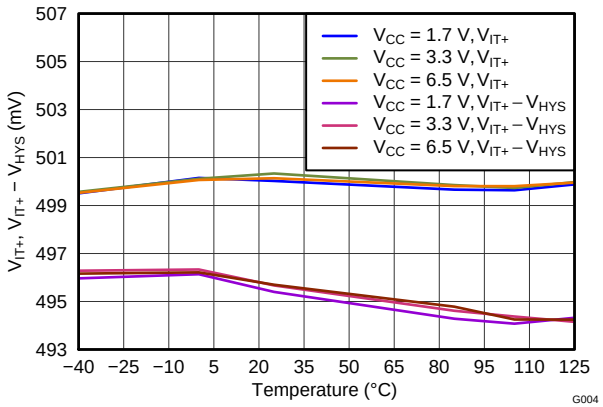

An IMPORTANT NOTICE at the end of this data sheet addresses availability, warranty, changes, use in safety-critical applications, intellectual property matters and other important disclaimers. PRODUCTION DATA.

Table of Contents

1 Features ... 1
2 Applications ... 1
3 Description ... 1
4 Revision History ... 2
5 Device Comparison Table ... 3
6 Pin Configuration and Functions ... 4
7 Specifications ... 5
7.1 Absolute Maximum Ratings ... 5
7.2 ESD Ratings ... 5
7.3 Recommended Operating Conditions ... 5
7.4 Thermal Information ... 5
7.5 Electrical Characteristics ... 6
7.6 Timing Requirements ... 7
7.7 Typical Characteristics ... 9
8 Detailed Description ... 12
8.1 Overview ... 12
8.2 Functional Block Diagram ... 12
8.3 Feature Description ... 14
8.4 Device Functional Modes ... 15
9 Applications and Implementation ... 16
9.1 Application Information ... 16
9.2 Typical Applications ... 16
10 Power Supply Recommendations ... 23
11 Layout ... 23
11.1 Layout Guidelines ... 23
11.2 Layout Example ... 23
12 Device and Documentation Support ... 24
12.1 Device Support ... 24
12.2 Documentation Support ... 24
12.3 Trademarks ... 24
12.4 Electrostatic Discharge Caution ... 24
12.5 Glossary ... 24
13 Mechanical, Packaging, and Orderable Information ... 24

4 Revision History

Changes from Revision A (September 2011) to Revision B — **Page**

- Added *ESD Ratings* table, *Feature Description* section, *Device Functional Modes*, *Application and Implementation* section, *Power Supply Recommendations* section, *Layout* section, *Device and Documentation Support* section, and *Mechanical, Packaging, and Orderable Information* section ... 1
- Changed paragraph 1 of *Description* section; revised for clarification ... 1
- Changed *Pin Configuration and Functions* section; updated table format, renamed pin packages to meet new standards ... 4

Copyright © 2011–2015, Texas Instruments Incorporated

5 Device Comparison Table

DEVICE	ENABLE	OUTPUT	INPUT (SENSE) DELAY	ENABLE DELAY
TPS3895A	Active high	Active high, push-pull	Capacitor adjustable	Capacitor adjustable
TPS3895P	Active high	Active high, push-pull	Capacitor adjustable	0.2 µs
TPS3896A	Active low	Active low, push-pull	Capacitor adjustable	Capacitor adjustable
TPS3896P	Active low	Active low, push-pull	Capacitor adjustable	0.2 µs
TPS3897A	Active high	Active high, open drain	Capacitor adjustable	Capacitor adjustable
TPS3897P	Active high	Active high, open drain	Capacitor adjustable	0.2 µs
TPS3898A	Active low	Active low, open drain	Capacitor adjustable	Capacitor adjustable
TPS3898P	Active low	Active low, open drain	Capacitor adjustable	0.2 µs

Copyright © 2011–2015, Texas Instruments Incorporated

6 Pin Configuration and Functions

DRY Package: TPS3895, TPS3897
6-Pin USON
Top View

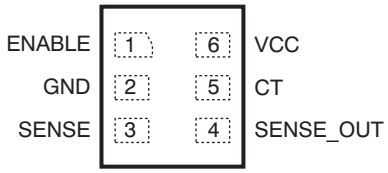

DRY Package: TPS3896, TPS3898
6-Pin USON
Top View

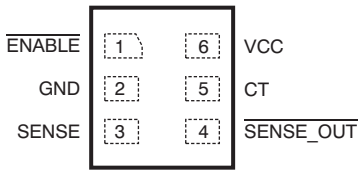

Pin Functions

PIN			I/O	DESCRIPTION
NAME	USON			
	TPS3895/ TPS3897	TPS3896/ TPS3898		
CT	5	5	I	Capacitor-adjustable delay. The CT pin offers a user-adjustable delay time. Connecting this pin to a ground referenced capacitor sets the delay time for SENSE rising above 0.5 V to SENSE_OUT asserting (or ENABLE asserting to SENSE_OUT asserting for A version devices). $t_{pd(r)}$ (s) = [C_{CT} (µF) × 4] + 40 µs
ENABLE	1	—	I	Active high input. Driving ENABLE low immediately makes SENSE_OUT go low, independent of $V_{(SENSE)}$. With $V_{(SENSE)}$ already above V_{IT+}, drive ENABLE high to make SENSE_OUT go high after the capacitor-adjustable delay time (A version) or 0.2 µs (P version).
$\overline{\text{ENABLE}}$	—	1	I	Active low input. Driving $\overline{\text{ENABLE}}$ high immediately makes $\overline{\text{SENSE_OUT}}$ go high, independent of $V_{(SENSE)}$. With $V_{(SENSE)}$ already above V_{IT+}, drive $\overline{\text{ENABLE}}$ low to make $\overline{\text{SENSE_OUT}}$ go low after the capacitor-adjustable delay time (A version) or 0.2 µs (P version).
GND	2	2	—	Ground
SENSE	3	3	I	This pin is connected to the voltage that is monitored with the use of an external resistor. The output asserts after the capacitor-adjustable delay time when $V_{(SENSE)}$ rises above 0.5 V and ENABLE is asserted. The output deasserts after a minimal propagation delay (16 µs) when $V_{(SENSE)}$ falls below $V_{IT+} – V_{hys}$.
SENSE_OUT	4	—	O	SENSE_OUT is an open-drain and push-pull output that is immediately driven low after $V_{(SENSE)}$ falls below ($V_{IT+} – V_{hys}$) or the ENABLE input is low. SENSE_OUT goes high after the capacitor-adjustable delay time when $V_{(SENSE)}$ is greater than V_{IT+} and the ENABLE pin is high. Open-drain devices (TPS3897/8) can be pulled up to 18 V independent of V_{CC}; pullup resistors are required for these devices.
$\overline{\text{SENSE_OUT}}$	—	4	O	$\overline{\text{SENSE_OUT}}$ is an open-drain and push-pull output that is immediately driven high after $V_{(SENSE)}$ falls below ($V_{IT+} – V_{hys}$) or the $\overline{\text{ENABLE}}$ input is high. $\overline{\text{SENSE_OUT}}$ goes low after the capacitor-adjustable delay time when $V_{(SENSE)}$ is greater than V_{IT+} and the $\overline{\text{ENABLE}}$ pin is low. Open-drain devices (TPS3897/8) can be pulled up to 18 V independent of V_{CC}; pullup resistors are required for these devices.
VCC	6	6	I	Supply voltage input. Connect a 1.7-V to 6.5-V supply to VCC to power the device. It is good analog design practice to place a 0.1-µF ceramic capacitor close to this pin.

Copyright © 2011–2015, Texas Instruments Incorporated

7 Specifications

7.1 Absolute Maximum Ratings

Over operating free-air temperature range (unless otherwise noted).[1]

		MIN	MAX	UNIT
Voltage[2]	VCC	–0.3	7	V
	CT	–0.3	V_{CC} + 0.3	
	ENABLE, SENSE, SENSE_OUT (push-pull)	–0.3	7	
	SENSE_OUT (open drain)	–0.3	20	
	SENSE_OUT (push-pull)	–0.3	7	
Current	SENSE_OUT		±10	mA
Temperature	Operating junction, T_J	–40	125	°C
	Storage, T_{stg}	–65	150	

(1) Stresses beyond those listed under *Absolute Maximum Ratings* may cause permanent damage to the device. These are stress ratings only, and functional operation of the device at these or any other conditions beyond those indicated under *Recommended Operating Conditions* is not implied. Exposure to absolute-maximum-rated conditions for extended periods my affect device reliability.
(2) All voltages are with respect to network ground terminal.

7.2 ESD Ratings

		VALUE	UNIT
$V_{(ESD)}$ Electrostatic discharge	Human body model (HBM), per ANSI/ESDA/JEDEC JS-001, all pins[1]	±2000	V
	Charged device model (CDM), per JEDEC specification JESD22-C101, all pins[2]	±500	

(1) JEDEC document JEP155 states that 500-V HBM allows safe manufacturing with a standard ESD control process.
(2) JEDEC document JEP157 states that 250-V CDM allows safe manufacturing with a standard ESD control process.

7.3 Recommended Operating Conditions

over operating free-air temperature range (unless otherwise noted)

		MIN	NOM	MAX	UNIT
V_{CC}	Input supply voltage	1.7		6.5	V
V_{ENABLE}, $V_{\overline{ENABLE}}$	ENABLE and $\overline{ENABLE}$ pin voltage	0		6.5	V
V_{SENSE}	SENSE pin voltage	0		6.5	V
V_{SENSE_OUT}, $V_{\overline{SENSE_OUT}\ (open\ drain)}$	SENSE_OUT, $\overline{SENSE_OUT}$ pin voltage	0		18	V
V_{SENSE_OUT}, $V_{\overline{SENSE_OUT}\ (push\text{-}pull)}$	SENSE_OUT, $\overline{SENSE_OUT}$ pin voltage	0		V_{CC}	V
I_{SENSE_OUT}, $I_{\overline{SENSE_OUT}}$	SENSE_OUT, $\overline{SENSE_OUT}$ pin current	0.0003		1	mA

7.4 Thermal Information

THERMAL METRIC[1]		TPS389x DRY (USON) 6 PINS	UNIT
$R_{\theta JA}$	Junction-to-ambient thermal resistance	293.8	°C/W
$R_{\theta JC(top)}$	Junction-to-case (top) thermal resistance	165.1	
$R_{\theta JB}$	Junction-to-board thermal resistance	160.8	
ψ_{JT}	Junction-to-top characterization parameter	27.3	
ψ_{JB}	Junction-to-board characterization parameter	65.8	
$R_{\theta JC(bot)}$	Junction-to-case (bottom) thermal resistance	65.8	

(1) For more information about traditional and new thermal metrics, see the *IC Package Thermal Metrics* application report, SPRA953.

Copyright © 2011–2015, Texas Instruments Incorporated

7.5 Electrical Characteristics

Over the operating temperature range of T_J = –40°C to 125°C, and 1.7 V < V_{CC}< 6.5 V, unless otherwise noted. Typical values are at T_J = 25°C and V_{CC} = 3.3 V.

PARAMETER		TEST CONDITIONS	MIN	TYP	MAX	UNIT
V_{CC}	Supply voltage range	T_J = –40°C to 125°C	1.7		6.5	V
		T_J = 0°C to 85°C	1.65		6.5	
$V_{(POR)}$	Power-on reset voltage(1)	V_{OL} (max) = 0.2 V , $I_{(SENSE_OUT)}$ = 15 µA			0.8	V
I_{CC}	Supply current (into VCC pin)	V_{CC} = 3.3 V , no load		6	12	µA
		V_{CC} = 6.5 V , no load		7	12	
V_{IT+}	Positive-going input threshold voltage	$V_{(SENSE)}$ rising	0.495	0.5	0.505	V
V_{hys}	Hysteresis voltage	$V_{(SENSE)}$ falling		5		mV
$I_{(SENSE)}$	Input current(2)	$V_{(SENSE)}$ = 0 V or V_{CC}	–15		15	nA
$I_{(CT)}$	CT pin charge current		260	310	360	nA
$V_{(CT)}$	CT pin comparator threshold voltage		1.18	1.238	1.299	V
$R_{(CT)}$	CT pin pulldown resistance			200		Ω
V_{IL}	Low-level input voltage (ENABLE pin)				0.4	V
V_{IH}	High-level input voltage (ENABLE pin)		1.4			V
UVLO	Undervoltage lockout(3)	V_{CC} falling	1.3		1.7	V
I_{lkg}	Leakage current	ENABLE = V_{CC} or GND	–100		100	nA
V_{OL}	Low-level output voltage	V_{CC} ≥ 1.2 V, I_{SINK} = 90 µA (TPS3895/7 only)			0.3	V
		V_{CC} ≥ 2.25 V, I_{SINK} = 0.5 mA			0.3	
		V_{CC} ≥ 4.5 V, I_{SINK} = 1 mA			0.4	
V_{OH}	High-level output voltage (push-pull)	V_{CC} ≥ 2.25 V, I_{SOURCE} = 0.5 mA	0.8V_{CC}			V
		V_{CC} ≥ 4.5 V, I_{SOURCE} = 1 mA	0.8V_{CC}			
$I_{lkg(OD)}$	Open-drain output leakage current	$V_{(SENSE_OUT)}$ high impedance = 18 V			300	nA

(1) The lowest supply voltage (V_{CC}) at which output is active (SENSE_OUT is low, $\overline{\text{SENSE_OUT}}$ is high); $t_r(V_{CC})$ > 15 µs/V. Below $V_{(POR)}$, the output cannot be determined.
(2) Specified by design.
(3) When V_{CC} falls below the UVLO threshold, the output deasserts (SENSE_OUT goes low, $\overline{\text{SENSE_OUT}}$ goes high). Below $V_{(POR)}$, the output cannot be determined.

Copyright © 2011–2015, Texas Instruments Incorporated

7.6 Timing Requirements

			MIN	TYP	MAX	UNIT
$t_{pd(r)}$	SENSE (rising) to SENSE_OUT propagation delay	$V_{(SENSE)}$ rising, $C_{(CT)}$ = open		40		µs
		$V_{(SENSE)}$ rising, $C_{(CT)}$ = 0.047 µF		190		ms
$t_{pd(f)}$	SENSE (falling) to SENSE_OUT propagation delay	$V_{(SENSE)}$ falling		16		µs
	Start-up delay(1)			50		µs
t_w	ENABLE pin minimum pulse duration		1			µs
	ENABLE pin glitch rejection			100		ns
$t_{d(OFF)}$	ENABLE to SENSE_OUT delay time (output disabled)	ENABLE deasserted to output deasserted		200		ns
$t_{d(P)}$	ENABLE to SENSE_OUT delay time (P version)	ENABLE asserted to output asserted delay (P version)		200		ns
$t_{d(A)}$	ENABLE to SENSE_OUT delay time (A version)	ENABLE asserted to output asserted delay (A version), $C_{(CT)}$ = open		20		µs
		ENABLE asserted to output asserted delay (A version), $C_{(CT)}$ = 0.047 µF		190		ms

(1) During power on, V_{CC} must exceed 1.7 V for at least 50 µs (plus propagation delay time, $t_{pd(r)}$) before output is in the correct state.

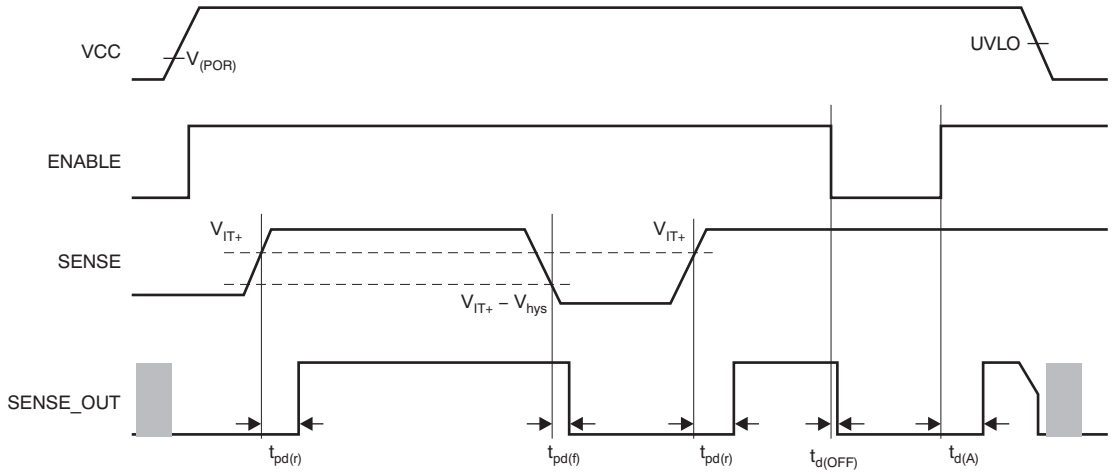

Figure 1. TPS3895A and TPS3897A Timing

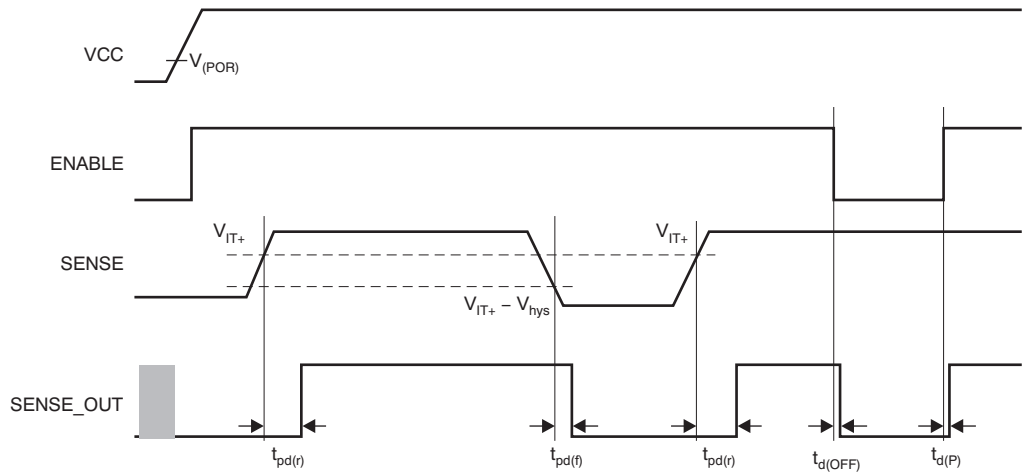

Figure 2. TPS3895P and TPS3897P Timing

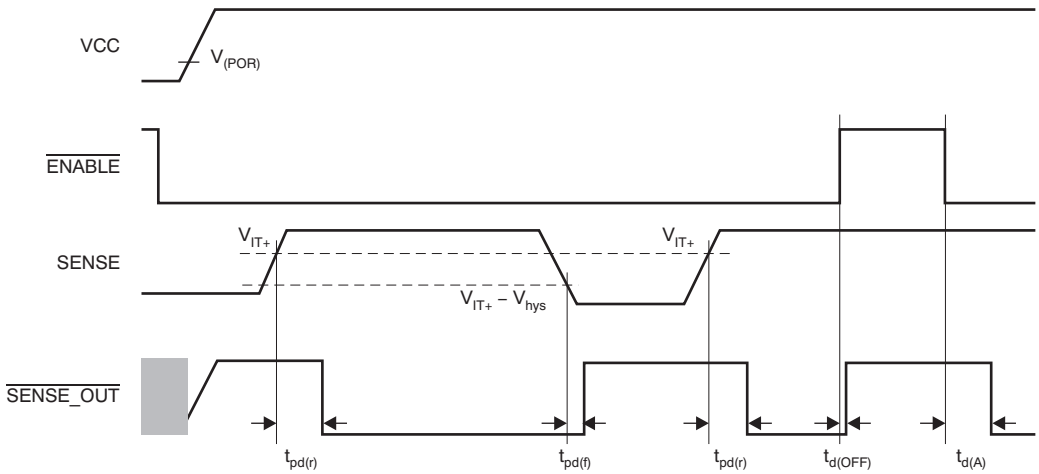

Figure 3. TPS3896A and TPS3898A Timing

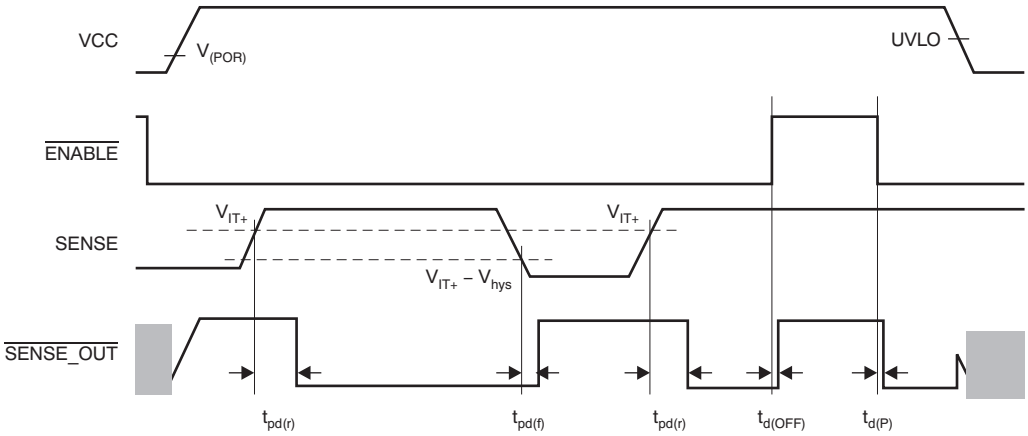

Figure 4. TPS3896P and TPS3898P Timing

Copyright © 2011–2015, Texas Instruments Incorporated

7.7 Typical Characteristics

At T_A = 25°C, and V_{CC} = 3.3 V, unless otherwise noted.

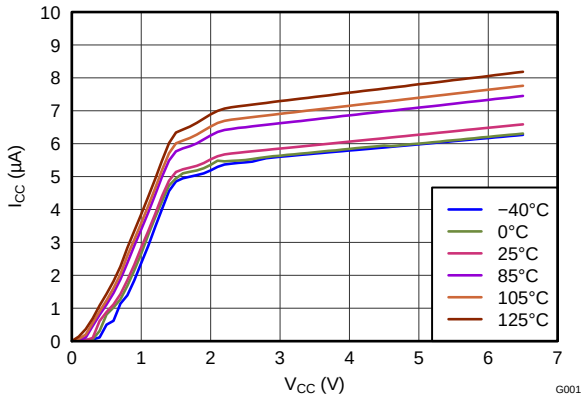

Figure 5. Supply Current vs Supply Voltage

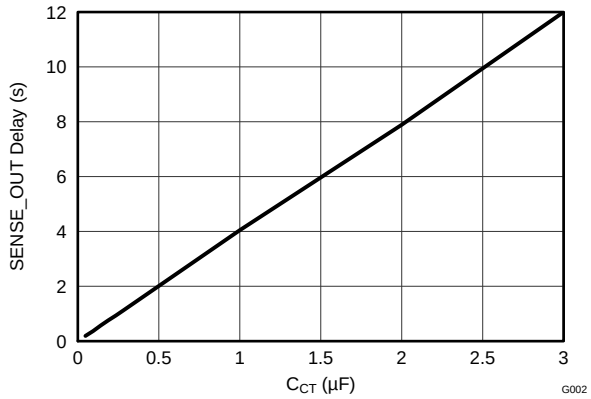

Figure 6. SENSE_OUT Time-Out Period vs C_{CT}

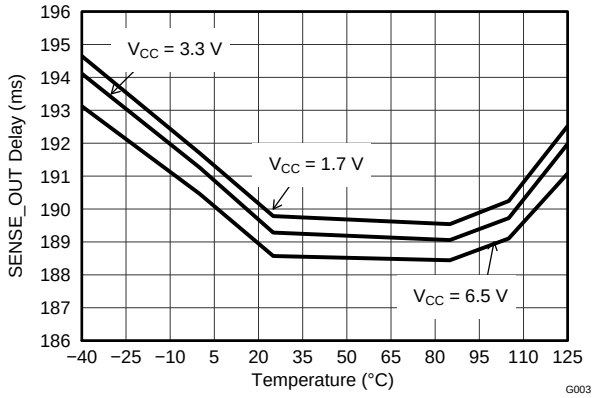

Figure 7. SENSE_OUT Time-Out Period vs Temperature (C_{CT} = 47 nF)

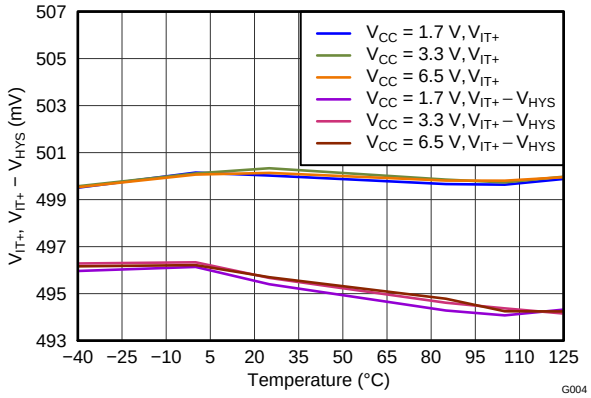

Figure 8. SENSE Threshold Voltage vs Temperature

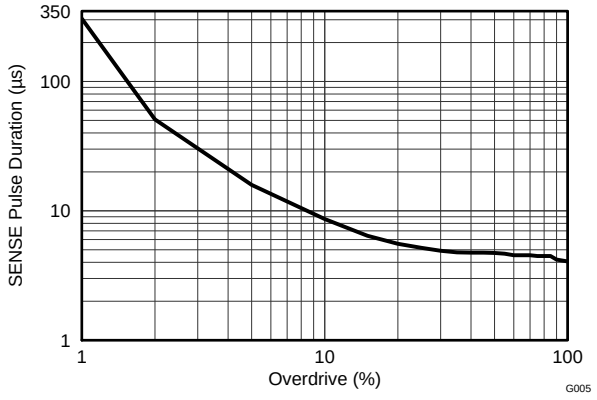

Figure 9. SENSE Minimum Pulse Duration vs SENSE Threshold Overdrive Voltage

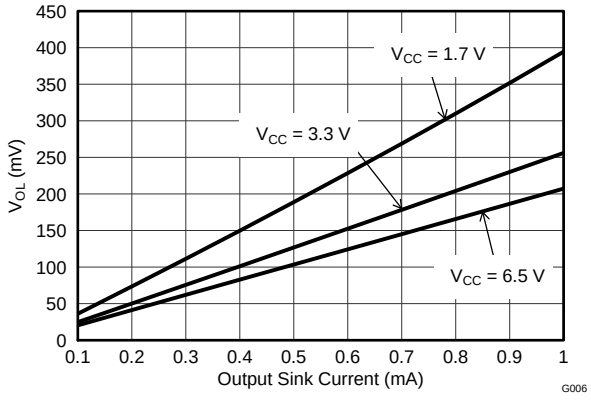

Figure 10. Output Voltage Low vs Output Current (0 mA to 1 mA)

Typical Characteristics (continued)

At T_A = 25°C, and V_{CC} = 3.3 V, unless otherwise noted.

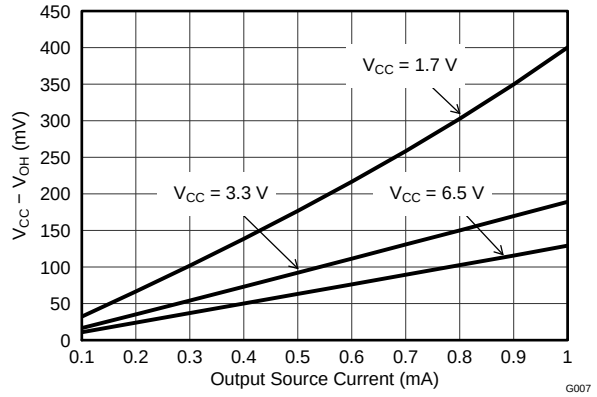

Figure 11. Output Voltage High vs Output Current (0 mA to 1 mA)

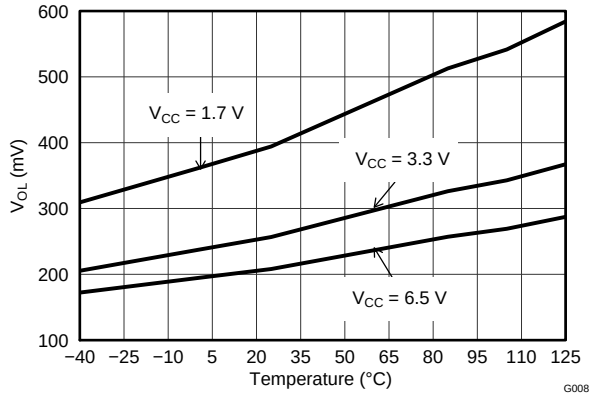

Figure 12. Output Voltage Low at 1 mA vs Temperature

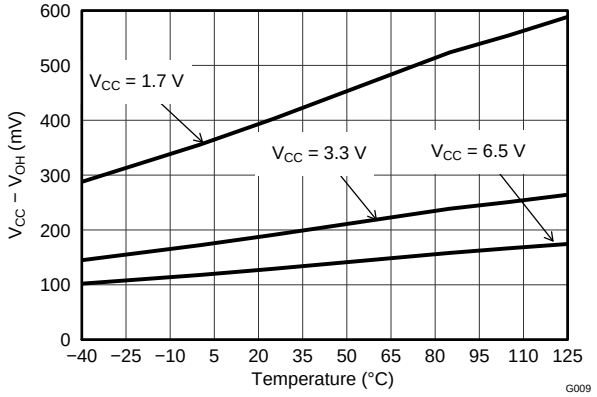

Figure 13. Output Voltage High at 1 mA vs Temperature

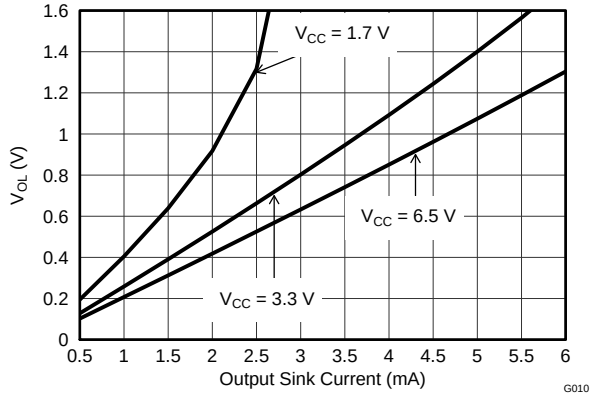

Figure 14. Output Voltage Low vs Output Current

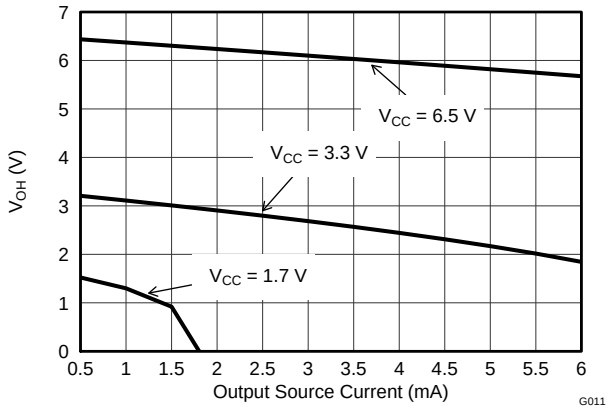

Figure 15. Output Voltage High vs Output Current

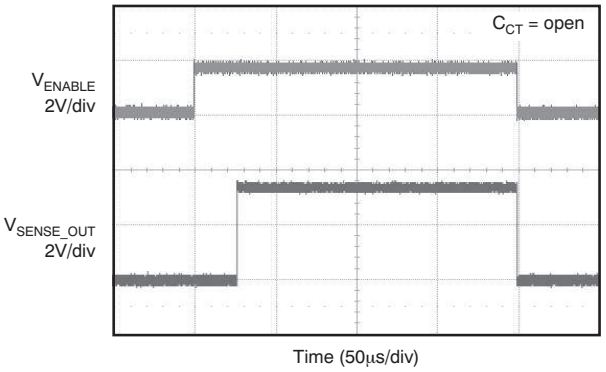

Figure 16. Enable Power On and Power Off Delay (TPS3895A)

Copyright © 2011–2015, Texas Instruments Incorporated

Typical Characteristics (continued)

At T_A = 25°C, and V_{CC} = 3.3 V, unless otherwise noted.

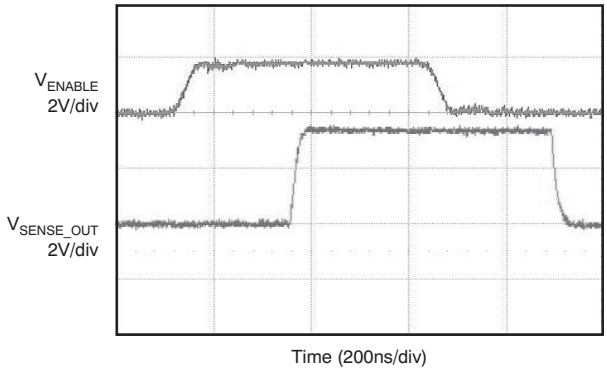

Figure 17. Enable Power On and Power Off Delay (TPS3895P)

8 Detailed Description

8.1 Overview

The TPS3895, TPS3896, TPS3897, and TPS3898 devices (TPS389x) are a family of ultra-small supervisory circuits. The TPS389x is designed to assert the SENSE_OUT or $\overline{\text{SENSE_OUT}}$ signal, as shown in Table 1 and Table 2. When the SENSE pin rises above 0.5 V and the enable input is asserted (ENABLE = high or $\overline{\text{ENABLE}}$ = low) , the output asserts (SENSE_OUT goes high or $\overline{\text{SENSE_OUT}}$ goes low) after the capacitor-adjustable delay time. The SENSE pin can be set to any voltage threshold above 0.5 V using an external resistor divider. A broad range of output delay times and voltage thresholds can be supported, allowing these devices to be used in wide array of applications.

Table 1. TPS3895/7 Truth Table

CONDITIONS		OUTPUT	STATUS
ENABLE = high	SENSE < V_{IT+}	SENSE_OUT = low	Output not asserted
ENABLE = low	SENSE < V_{IT+}	SENSE_OUT = low	Output not asserted
ENABLE = low	SENSE > V_{IT+}	SENSE_OUT = low	Output not asserted
ENABLE = high	SENSE > V_{IT+}	SENSE_OUT = high	Output asserted after delay

Table 2. TPS3896/8 Truth Table

CONDITIONS		OUTPUT	STATUS
$\overline{\text{ENABLE}}$ = low	SENSE < V_{IT+}	$\overline{\text{SENSE_OUT}}$ = high	Output not asserted
$\overline{\text{ENABLE}}$ = high	SENSE < V_{IT+}	$\overline{\text{SENSE_OUT}}$ = high	Output not asserted
$\overline{\text{ENABLE}}$ = high	SENSE > V_{IT+}	$\overline{\text{SENSE_OUT}}$ = high	Output not asserted
$\overline{\text{ENABLE}}$ = low	SENSE > V_{IT+}	$\overline{\text{SENSE_OUT}}$ = low	Output asserted after delay

8.2 Functional Block Diagram

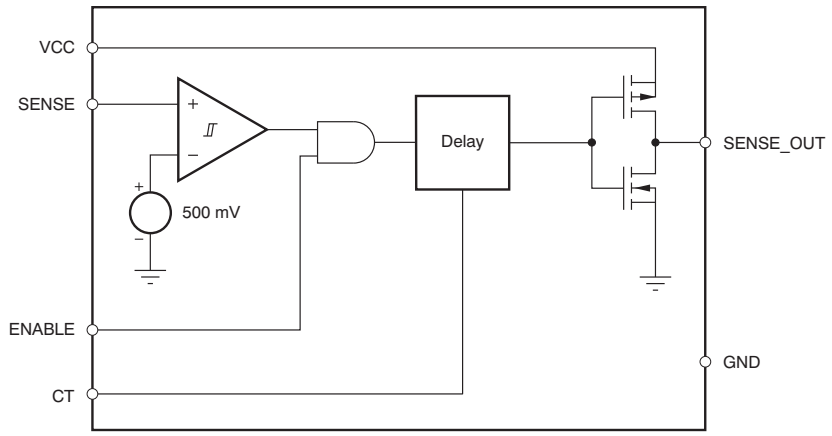

Figure 18. TPS3895A Block Diagram

Copyright © 2011–2015, Texas Instruments Incorporated

Functional Block Diagram (continued)

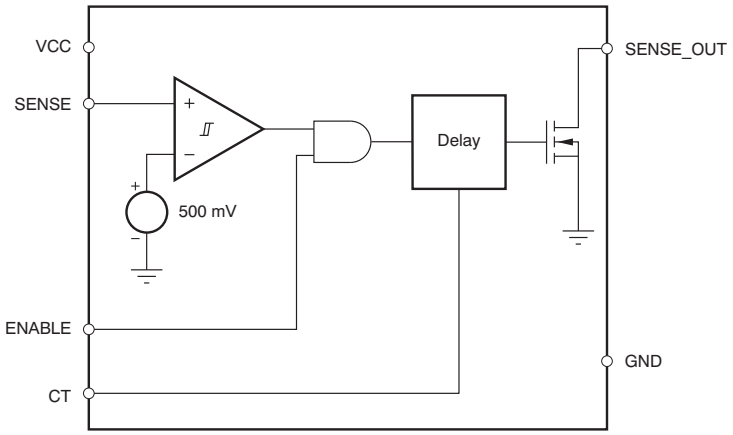

Figure 19. TPS3897A Block Diagram

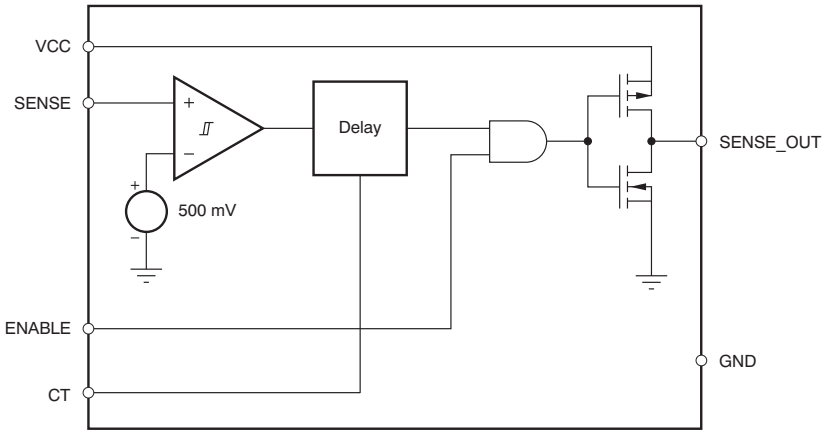

Figure 20. TPS3895P Block Diagram

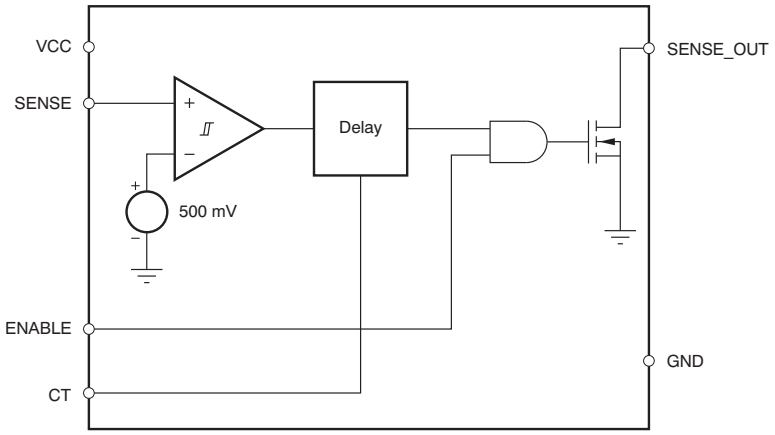

Figure 21. TPS3897P Block Diagram

8.3 Feature Description

8.3.1 Input Pin (SENSE)

The SENSE input pin allows any system voltage above 0.5 V to be monitored. If the voltage at the SENSE pin exceeds V_{IT+}, and provided that the enable pin is asserted (ENABLE = high or $\overline{ENABLE}$ = low), then the output is asserted after the capacitor-adjustable delay time elapses. When the voltage at the SENSE pin drops below ($V_{IT+} - V_{hys}$), then the output is deasserted. The comparator has a built-in hysteresis to ensure smooth output assertions and deassertions. Although not required in most cases, for extremely noisy applications, it is good analog design practice to place a 1-nF to 10-nF bypass capacitor at the SENSE input in order to reduce sensitivity to transients and layout parasitics.

The TPS389x family monitor the voltage at SENSE with the use of external resistor divider, as shown in Figure 22.

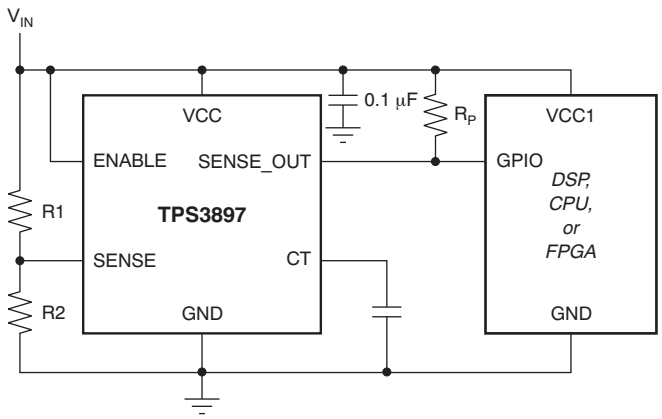

Figure 22. Using TPS3897 to Monitor User-Defined Threshold Voltage

The target threshold voltage can be calculated by using Equation 1:

$$V_{TARGET} = (1+R1/R2) \times 0.5\ (V) \quad (1)$$

When the input voltage (V_{IN}) shown in Figure 22 is greater than V_{TARGET}, then the output is asserted, provided that the enable pin is asserted (ENABLE = high or $\overline{ENABLE}$ = low). R1 and R2 can have high values (> 100 kΩ) to minimize current consumption as a result of a low SENSE input current without adding significant error to the resistive divider. Refer to application note SLVA450 to learn more about sizing sense-point resistors.

8.3.2 Enable Pin (ENABLE)

The enable input allows an external logic signal from other processors, logic circuits, and/or discrete sensors to turn on or turn off the output. The TPS3895 and TPS3897 offer an active-high enable input (ENABLE). The TPS3896 and TPS3898 offer an active-low enable input ($\overline{ENABLE}$). Driving ENABLE low (or $\overline{ENABLE}$ high) forces SENSE_OUT to go low (or $\overline{SENSE_OUT}$ to go high). The 0.4-V (maximum) low and 1.4-V (minimum) high allow ENABLE to be driven with a 1.5-V or greater system supply.

The TPS389x family is available in two versions: the TPS389xA and TPS389xP. For TPS389xA devices with $V_{SENSE} > V_{IT+}$, driving ENABLE high (or $\overline{ENABLE}$ = low) makes SENSE_OUT go high (or $\overline{SENSE_OUT}$ go low) after the capacitor-adjustable delay time. For the TPS389xP versions with $V_{SENSE} > V_{IT+}$, driving ENABLE high (or $\overline{ENABLE}$ low) makes SENSE_OUT go high (or $\overline{SENSE_OUT}$ go low) after a 0.2-µs delay.

8.3.3 Output Pin (SENSE_OUT)

In a typical TPS389x application, the SENSE_OUT or $\overline{SENSE_OUT}$ outputs are connected to a reset/enable input of the processor (DSP, CPU, FPGA, ASIC, and so on) or connected to the enable input of a voltage regulator.

Copyright © 2011–2015, Texas Instruments Incorporated

Feature Description (continued)

The TPS3897 and TPS3898 provide open-drain outputs. Pullup resistors must be used to hold these lines high when SENSE_OUT is asserted or $\overline{\text{SENSE_OUT}}$ is not asserted. By connecting the pullup resistors to the proper voltage rails, SENSE_OUT or $\overline{\text{SENSE_OUT}}$ can be connected to other devices at the correct interface voltage levels. The outputs can be pulled up to 18 V independent of the supply voltage (V_{CC}). To ensure proper voltage levels, some thought should be given to choosing the correct pullup resistor values. The ability to sink current is determined by the supply voltage; therefore, if V_{CC} = 5 V and the desired output pullup is 18 V, then to obtain a sink current of 1 mA or less (as mentioned in the *Electrical Characteristics*), the pullup resistor value should be greater than 18 kΩ. By using wired-OR logic, any combination of SENSE_OUT can be merged into one logic signal.

The TPS3895 and TPS3896 provide push-pull outputs. The logic high level of the outputs is determined by the VCC pin voltage. With this configuration, pullup resistors are not required and some board area can be saved. However, all the interface logic levels must be examined. All the SENSE_OUT and $\overline{\text{SENSE_OUT}}$ connections must be compatible with the VCC pin logic level.

The SENSE_OUT or $\overline{\text{SENSE_OUT}}$ outputs are defined for a VCC voltage higher than 0.8 V. Table 1 and Table 2 are truth tables that describe how the outputs are asserted or deasserted. When the conditions are met, the device changes state from deasserted to asserted after a preconfigured delay time. However, the transitions from asserted to deasserted are performed almost immediately with minimal propagation delay of 16 µs (typical). Figure 1 to Figure 4 show the timing diagrams and describe the relationship between the threshold voltages (V_{IT+} and V_{hys}), enable inputs, and respective outputs.

8.3.4 Output Delay Time Pin (CT)

To program a user-defined, adjustable delay time, an external capacitor must be connected between the CT pin and GND. If the CT pin is left open, there will be a delay of 40 µs. The adjustable delay time can be calculated through Equation 2:

$$t_{pd(r)}\ (s) = [C_{CT}\ (\mu F) \times 4] + 40\ \mu s \tag{2}$$

The reset delay time is determined by the time it takes an on-chip, precision 310-nA current source to charge the external capacitor to 1.24 V. When SENSE > V_{IT+} and with ENABLE high (or $\overline{\text{ENABLE}}$ low), the internal current sources are enabled and begin to charge the external capacitors. When the CT*n* voltage on a capacitor reaches 1.24 V, the corresponding SENSE_OUT or $\overline{\text{SENSE_OUT}}$ is asserted. Note that a low-leakage type capacitor (such as ceramic) should be used, and that stray capacitance around this pin may cause errors in the reset delay time.

8.3.5 Immunity To Sense Pin Voltage Transients

The TPS389x is relatively immune to short negative transients on the SENSE pin. Sensitivity to transients depends on threshold overdrive, as shown in the typical characteristic graph *Minimum Pulse Duration vs Threshold Overdrive Voltage* (Figure 9).

8.4 Device Functional Modes

8.4.1 Normal Operation ($V_{DD} > V_{DD(min)}$)

When the voltage on VDD is greater than $V_{DD(min)}$, the output corresponds to the voltages on the VDD and ENABLE pins relative to V_{IT-}.

8.4.2 Below $V_{DD(min)}$ ($V_{(POR)} < V_{DD} < V_{DD(min)}$)

When the voltage on VDD is less than $V_{DD(min)}$ but greater than the power-on reset voltage ($V_{(POR)}$), the output is deasserted (V_{SENSE_OUT} is low and $V_{\overline{SENSE_OUT}}$ is high.

8.4.3 Below Power-On Reset ($V_{DD} < V_{(POR)}$)

When the voltage on VDD is lower than the power-on reset voltage ($V_{(POR)}$), the output is undefined. Do not rely on the output for proper device function under this condition.

Copyright © 2011–2015, Texas Instruments Incorporated

9 Applications and Implementation

NOTE

Information in the following applications sections is not part of the TI component specification, and TI does not warrant its accuracy or completeness. TI's customers are responsible for determining suitability of components for their purposes. Customers should validate and test their design implementation to confirm system functionality.

9.1 Application Information

The TPS389x family of devices are very small supervisory circuits that monitor voltages greater than 500 mV and offer an adjustable delay time using external capacitors. The TPS389x family operates from 1.7 V to 6.5 V and also has an enable pin to power on/off the output. Orderable options include versions with either push-pull or open-drain outputs as well as versions that use active-high or active-low logic for the output and enable signals.

9.2 Typical Applications

9.2.1 Single-Rail Monitoring

The TPS3895P can be used to monitor the supply rail for devices such as digital signal processors (DSPs), central processing units (CPUs), or field-programmable gate arrays (FPGAs). The downstream device is enabled by the TPS3895P once the voltage on the SENSE pin (V_{SENSE}) is above the threshold voltage (V_{IT+}) set by the resistor divider. The downstream device is disabled by the TPS3895P when V_{SENSE} is falls below the threshold voltage minus the hysteresis voltage ($V_{IT+} – V_{hys}$).

If active low inputs or outputs are needed, replace the TPS3895P devices with TPS3896P devices. Figure 23 shows the TPS3895P in a typical application.

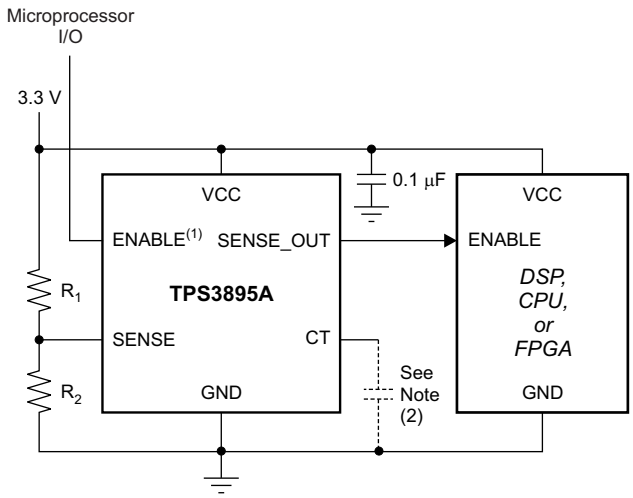

(1) ENABLE can also be driven with a separate 1.5-V or greater power supply.

(2) Capacitor is optional. If a capacitor is not used, leave the CT pin open for a 40-µs delay.

Figure 23. TPS3895 Typical Application

9.2.1.1 Design Requirements

The TPS3895P must drive the enable pin of devices using a logic-high signal to signify that the supply voltage is above the minimum operating voltage of the device.

9.2.1.2 Detailed Design Procedure

Select R_1 and R_2 so the voltage at SENSE (V_{SENSE}) is above the positive-going threshold voltage (V_{IT+}) at the supply voltage required for proper device operation (that is, proper operation of the DSP, CPU, FPGA, and so on). Also, ensure that the current that flows from the supply voltage to ground through the resistor divider is at least 100 times larger than the input current (I_{SENSE}).

Copyright © 2011–2015, Texas Instruments Incorporated

Typical Applications (continued)

If an output delay time is required, connect a capacitor from CT to GND; see the *Output Delay Time Pin (CT)* section for more information. If no CT cap is connected, the delay time is 40 µs.

9.2.1.3 Application Curve

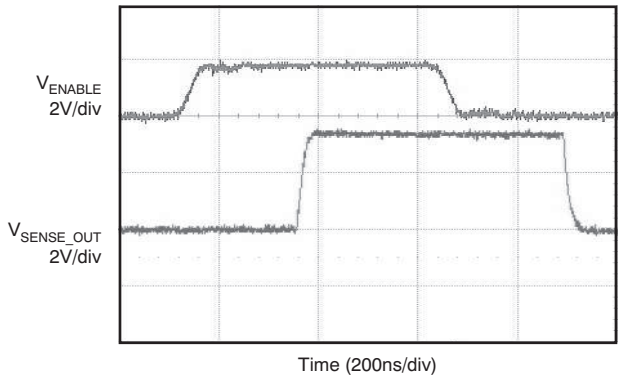

Figure 24. Enable Power On and Power Off Delay (TPS3895P)

9.2.2 Multiple Voltage Monitoring Sequential Delay

Multiple TPS3895As can be used to monitor multiple supply rails with a single output signifying whether or not all rails are above the respective thresholds. Some applications may need a minimum total delay time that is the sum of all the delay times of the supply monitor. To achieve this configuration, connect the output of one TPS3895A to the ENABLE pin of the next TPS3895A, and repeat until the last TPS3895A is connected to the device that receives the final Wired-AND signal. The downstream device receives a signal from the last TPS3895A once V_{SENSE} on all SENSE pins is above the V_{IT+} set by the resistor dividers. The downstream device is disabled by the last TPS3895A if the voltage on any SENSE pin in the chain falls below ($V_{IT+} – V_{hys}$).

Figure 25 shows an example of a configuration for dual-supply monitoring; this concept can be expanded for as many rails as a given application requires.

If active low inputs or outputs are needed, replace the TPS3895A devices with TPS3896A devices.

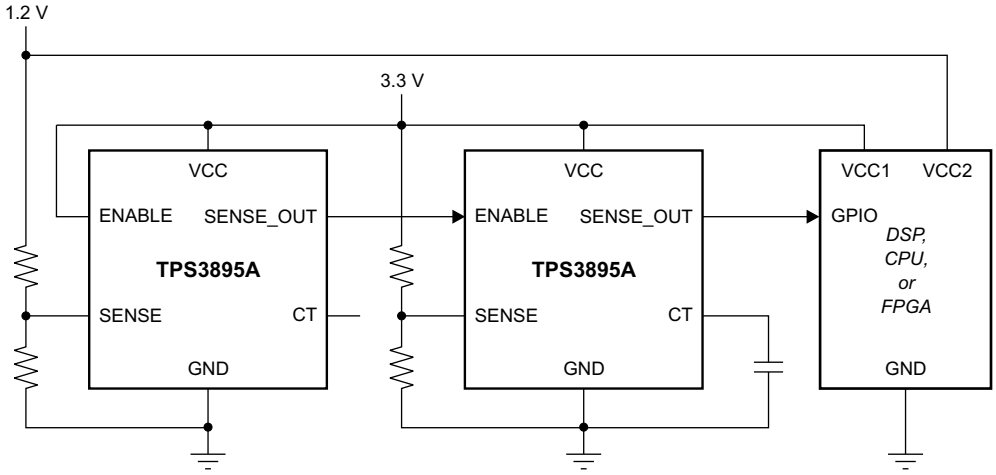

Figure 25. Multiple Voltage Monitoring Using ENABLE Pin

9.2.2.1 Design Requirements

Two rails must be monitored to ensure that both are above the respective minimum operating voltage for proper operation pf the device. The TPS3895As must drive a GPIO pin of the final downstream device, and use a logic-high signal to signify that the supply voltages are above the minimum operating voltage of the given device.

Typical Applications (continued)

9.2.2.2 Detailed Design Procedure

Select the resistor divider of each TPS3895A so the voltage at SENSE (V_{SENSE}) is above the positive-going threshold voltage (V_{IT+}) at the point where the monitored voltage is required for proper device operation (that is, proper operation of the DSP, CPU, FPGA, and so on). Also, ensure that the currents that flow from the monitored voltage to ground through the resistor dividers are at least 100 times larger than the input current (I_{SENSE}).

If an output delay time is required for any of the TPS3895As, connect a capacitor from the CT pin of that TPS3895A to GND; see the *Output Delay Time Pin (CT)* section for more information. If no CT caps are connected, the delay time is 40 µs for each TPS3895A in the chain. Because each of the ENABLE pins is tied to the TPS3895A preceding it (other than the first), at a minimum the total delay time is the sum of all the delay times set by the CT pins in the design.

9.2.2.3 Application Curve

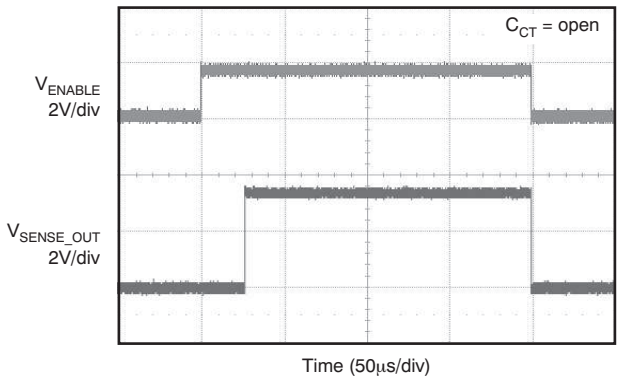

Figure 26. Enable Power On and Power Off Delay (TPS3895A)

9.2.3 Multiple Voltage Monitoring Minimum Delay

Multiple TPS3897Ps can be used to monitor multiple supply rails with a single output that signals if all rails are above the respective thresholds. Some applications may need a minimum total delay time that is equal to the delay time of only the final supply monitor to power up. To achieve this configuration, connect the outputs of all the TPS3897Ps to the device that must receive the final Wired-AND signal and connect that same node to the appropriate logic-high voltage via a resistor. The downstream device receives a signal once V_{SENSE} on all SENSE pins are above the V_{IT+} set by the resistor dividers. The downstream device is disabled if the voltage on any SENSE pin falls below ($V_{IT+} – V_{hys}$).

See Figure 27 for an example of a configuration for dual-supply monitoring. This concept can be expanded for as many rails as a given application requires.

If active low inputs/outputs are required, replace the TPS3897P devices with TPS3898P devices.

Copyright © 2011–2015, Texas Instruments Incorporated

Typical Applications (continued)

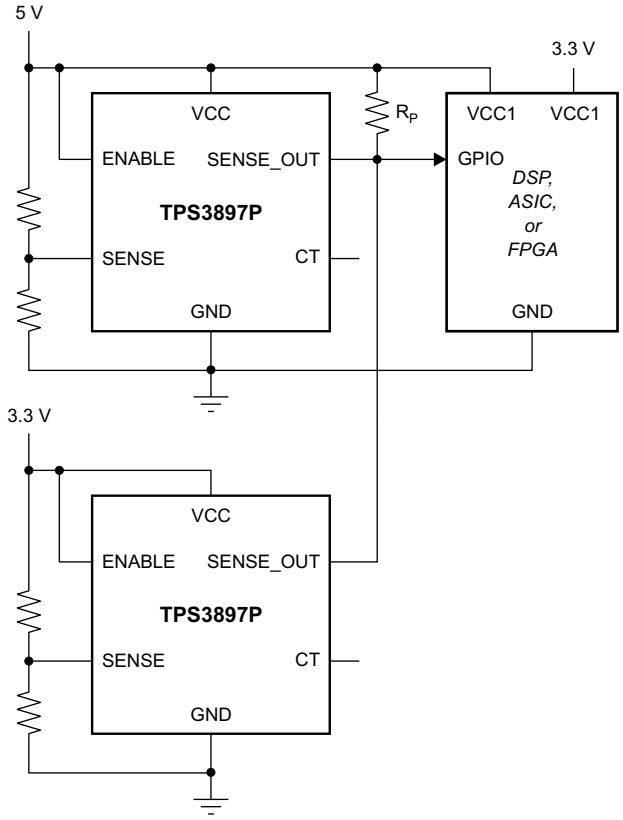

Figure 27. Multiple Voltage Monitoring Using Wired-OR Logic at SENSE_OUT

9.2.3.1 Design Requirements

Two rails must be monitored to ensure that both rails are above the respective minimum operating voltage for proper operation of the device. The TPS3897Ps must drive a GPIO pin of the final downstream device and use a logic-high signal to signify that the supply voltages are above the minimum operating voltage of the device.

9.2.3.2 Detailed Design Procedure

Select the resistor divider of each TPS3897P so the voltage at SENSE (V_{SENSE}) is above the positive-going threshold voltage (V_{IT+}) at the point where the monitored voltage is required for proper device operation (that is, proper operation of the DSP, CPU, FPGA, and so on). Also, ensure that the currents that flow from the monitored voltage to ground through the resistor dividers are at least 100 times larger than the input current (I_{SENSE}).

If an output delay time is required for any of the TPS3897Ps, connect a capacitor from the CT pin of that TPS3897P to GND; see the *Output Delay Time Pin (CT)* section for more information. If no CT caps are connected, the delay time is 40 µs.

Determine the logic-high voltage by selecting the voltage that the pullup resistor (denoted R_P in Figure 29) is connected to. Select R_P so that current that flows to ground allows for a low-level output voltage that is low enough for the specific application. See the *Output Pin (SENSE_OUT)* section for more information.

Typical Applications (continued)

9.2.3.3 Application Curves

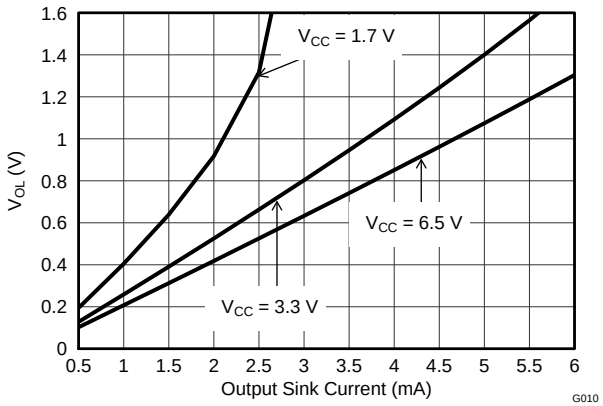

Figure 28. Output Voltage Low vs Output Current

9.2.4 Voltage Sequencing

TPS3895As can be used to implement voltage rail sequencing by connecting a resistor divider and the SENSE pin of a TPS3895A to the first rail to be monitored, and then feeding the output from the first TPS3895A to the ENABLE pin of the next voltage rail. The downstream voltage rail is enabled by the TPS3895A once the voltage on the SENSE pin (V_{SENSE}) is above the threshold voltage (V_{IT+}) set by the resistor divider. This process can be repeated for as many rails as the application requires. The downstream voltage rail is disabled by the TPS3895A when V_{SENSE} falls below the threshold voltage minus the hysteresis voltage ($V_{IT+} – V_{hys}$).

If active low inputs/outputs are required, replace the TPS3895A devices with TPS3896A devices.

See Figure 29 for an example for a system with four voltage rails that must sequence the three LDOs.

Copyright © 2011–2015, Texas Instruments Incorporated

Typical Applications (continued)

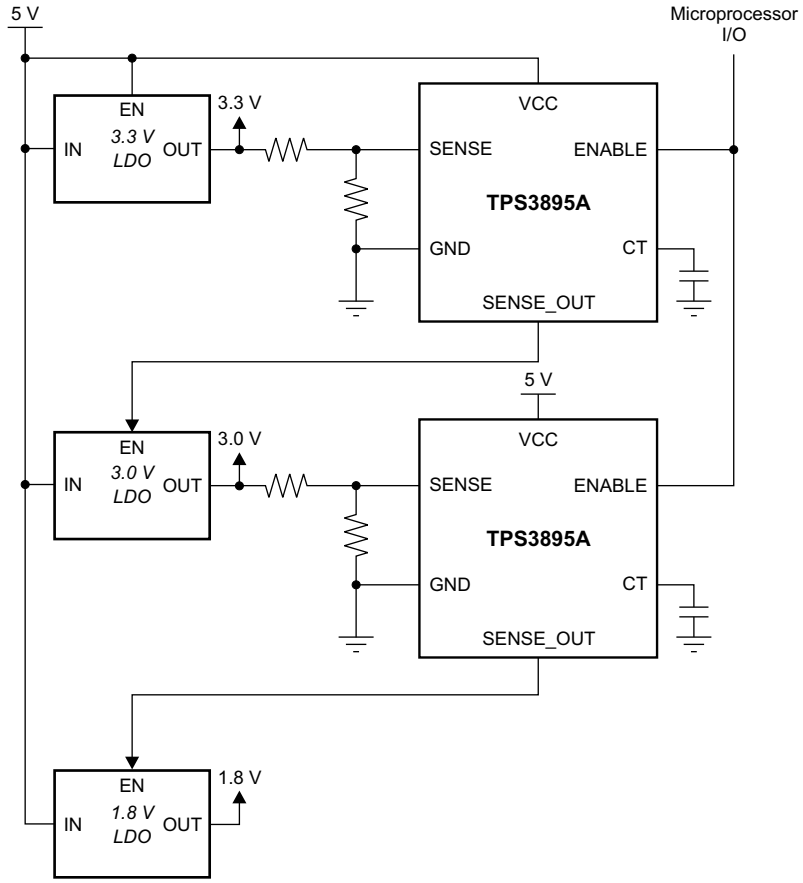

Figure 29. Voltage Sequencing (5 V → 3.3 V → 3 V → 1.8 V)

9.2.4.1 Design Requirements

Three rails must be sequenced to ensure proper start-up sequencing. The TPS3895As must drive the ENABLE pins of each LDO, and use a logic-high signal to signify that the supply preceding it is above the desired operating voltage for that rail. The ENABLE pin of the TPS3895As must be controlled by a microprocessor to allow it to be shut down even when the rails are above the threshold.

9.2.4.2 Detailed Design Procedure

Select the resistor divider of each TPS3895A so the voltage at SENSE (V_{SENSE}) is above the positive-going threshold voltage (V_{IT+}) at the point where the monitored voltage is required for proper device operation (that is, proper operation of the DSP, CPU, FPGA, and so on). Also, ensure that the currents that flow from the monitored voltage to ground through the resistor dividers are at least 100 times larger than the input current (I_{SENSE}).

If an output delay time is required for any of the TPS3895As, connect a capacitor from the CT pin of that TPS3895A to GND; see the *Output Delay Time Pin (CT)* section for more information. If no CT caps are connected, the delay time is 40 µs for each TPS3895A in the chain. Because each of the ENABLE pins is tied to the TPS3895A that precedes it (other than the first device in the chain), at a minimum the total delay time is the sum of all the delay times set by the CT pins.

Typical Applications (continued)

9.2.4.3 Application Curve

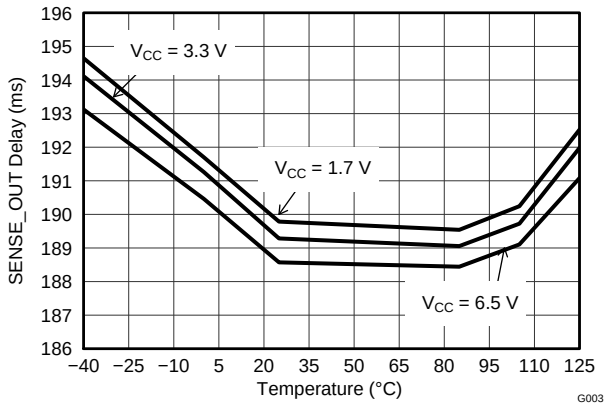

Figure 30. SENSE_OUT Time-out Period vs Temperature (C_{CT} = 47 nF)

Copyright © 2011–2015, Texas Instruments Incorporated

10 Power Supply Recommendations

These devices are designed to operate from an input supply with a voltage range from 1.7 V to 6.5 V. Though not required, it is good analog design practice to place a 0.1-µF ceramic capacitor close to the VCC pin.

11 Layout

11.1 Layout Guidelines

Follow these guidelines to lay out the printed-circuit-board (PCB) that is used for the TPS389x family of devices.

- Place the VCC decoupling capacitor close to the device.
- Avoid using long traces for the VCC supply node. The VCC capacitor (C_{VCC}), along with parasitic inductance from the supply to the capacitor, can form an LC tank and create ringing with peak voltages above the maximum VCC voltage.

11.2 Layout Example

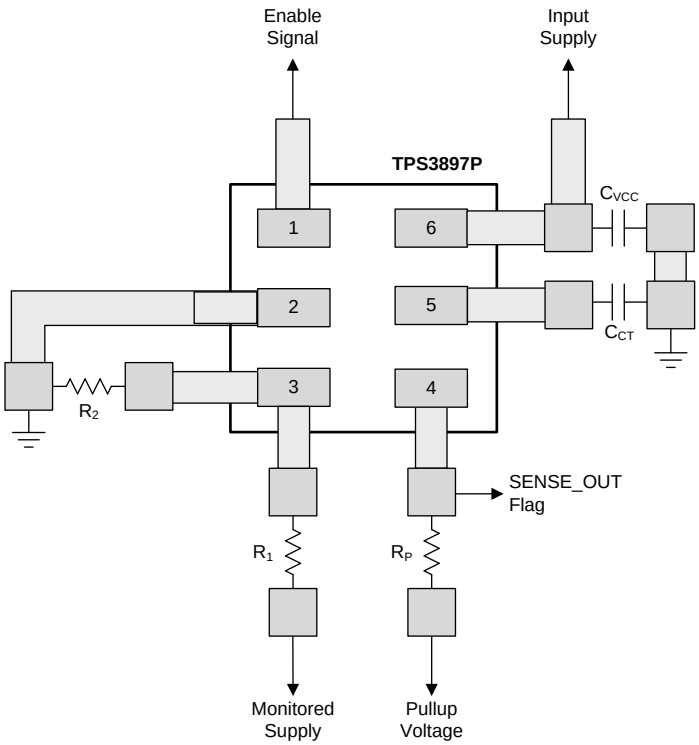

Figure 31. TPS3897P Layout Example (DRY Package)

12 Device and Documentation Support

12.1 Device Support

12.1.1 Development Support

12.1.1.1 Evaluation Modules

An evaluation module (EVM) is available to assist in the initial circuit performance evaluation using the TPS389x. The TPS3897A-6P-EVM047 evaluation module (and related user guide) can be requested at the TI website through the product folders or purchased directly from the TI eStore.

12.1.1.2 Spice Models

Computer simulation of circuit performance using SPICE is often useful when analyzing the performance of analog circuits and systems. SPICE models for the TPS389x are available through the respective device product folders under *Tools & Software*.

12.1.2 Device Nomenclature

Table 3. Device Nomenclature

PRODUCT	DESCRIPTION
TPS389**wxyyyz**	**w** is output configuration (see Device Comparison Table) **x** is different delay from enable pin (see Device Comparison Table) **yyy** is package designator **z** is package quantity

12.2 Documentation Support

12.2.1 Related Documentation

- *Choosing an Appropriate Pullup/Pulldown Resistor for Open Drain Outputs*, SLVA485
- *TPS3897A-6P-EVM047 User's Guide*, SLVU524

12.3 Trademarks

All trademarks are the property of their respective owners.

12.4 Electrostatic Discharge Caution

These devices have limited built-in ESD protection. The leads should be shorted together or the device placed in conductive foam during storage or handling to prevent electrostatic damage to the MOS gates.

12.5 Glossary

SLYZ022 — *TI Glossary*.

This glossary lists and explains terms, acronyms, and definitions.

13 Mechanical, Packaging, and Orderable Information

The following pages include mechanical, packaging, and orderable information. This information is the most current data available for the designated devices. This data is subject to change without notice and revision of this document. For browser-based versions of this data sheet, refer to the left-hand navigation.

Copyright © 2011–2015, Texas Instruments Incorporated

PACKAGING INFORMATION

Orderable part number	Status (1)	Material type (2)	Package | Pins	Package qty | Carrier	RoHS (3)	Lead finish/ Ball material (4)	MSL rating/ Peak reflow (5)	Op temp (°C)	Part marking (6)
TPS3895ADRYR	Active	Production	SON (DRY) | 6	5000 | LARGE T&R	Yes	NIPDAU	Level-1-260C-UNLIM	-40 to 125	UN
TPS3895ADRYR.A	Active	Production	SON (DRY) | 6	5000 | LARGE T&R	Yes	NIPDAU	Level-1-260C-UNLIM	-40 to 125	UN
TPS3895ADRYR.B	Active	Production	SON (DRY) | 6	5000 | LARGE T&R	Yes	NIPDAU	Level-1-260C-UNLIM	-40 to 125	UN
TPS3895ADRYRG4.A	Active	Production	SON (DRY) | 6	5000 | LARGE T&R	Yes	NIPDAU	Level-1-260C-UNLIM	-40 to 125	UN
TPS3895ADRYRG4.B	Active	Production	SON (DRY) | 6	5000 | LARGE T&R	Yes	NIPDAU	Level-1-260C-UNLIM	-40 to 125	UN
TPS3895ADRYT	Active	Production	SON (DRY) | 6	250 | SMALL T&R	Yes	NIPDAU	Level-1-260C-UNLIM	-40 to 125	UN
TPS3895ADRYT.A	Active	Production	SON (DRY) | 6	250 | SMALL T&R	Yes	NIPDAU	Level-1-260C-UNLIM	-40 to 125	UN
TPS3895ADRYT.B	Active	Production	SON (DRY) | 6	250 | SMALL T&R	Yes	NIPDAU	Level-1-260C-UNLIM	-40 to 125	UN
TPS3895PDRYR	Active	Production	SON (DRY) | 6	5000 | LARGE T&R	Yes	NIPDAU	Level-1-260C-UNLIM	-40 to 125	UO
TPS3895PDRYR.A	Active	Production	SON (DRY) | 6	5000 | LARGE T&R	Yes	NIPDAU	Level-1-260C-UNLIM	-40 to 125	UO
TPS3895PDRYR.B	Active	Production	SON (DRY) | 6	5000 | LARGE T&R	Yes	NIPDAU	Level-1-260C-UNLIM	-40 to 125	UO
TPS3895PDRYRG4.A	Active	Production	SON (DRY) | 6	5000 | LARGE T&R	Yes	NIPDAU	Level-1-260C-UNLIM	-40 to 125	UO
TPS3895PDRYRG4.B	Active	Production	SON (DRY) | 6	5000 | LARGE T&R	Yes	NIPDAU	Level-1-260C-UNLIM	-40 to 125	UO
TPS3895PDRYT	Active	Production	SON (DRY) | 6	250 | SMALL T&R	Yes	NIPDAU	Level-1-260C-UNLIM	-40 to 125	UO
TPS3895PDRYT.A	Active	Production	SON (DRY) | 6	250 | SMALL T&R	Yes	NIPDAU	Level-1-260C-UNLIM	-40 to 125	UO
TPS3895PDRYT.B	Active	Production	SON (DRY) | 6	250 | SMALL T&R	Yes	NIPDAU	Level-1-260C-UNLIM	-40 to 125	UO
TPS3896ADRYR	Active	Production	SON (DRY) | 6	5000 | LARGE T&R	Yes	NIPDAU	Level-1-260C-UNLIM	-40 to 125	UJ
TPS3896ADRYR.A	Active	Production	SON (DRY) | 6	5000 | LARGE T&R	Yes	NIPDAU	Level-1-260C-UNLIM	-40 to 125	UJ
TPS3896ADRYR.B	Active	Production	SON (DRY) | 6	5000 | LARGE T&R	Yes	NIPDAU	Level-1-260C-UNLIM	-40 to 125	UJ
TPS3896ADRYT	Active	Production	SON (DRY) | 6	250 | SMALL T&R	Yes	NIPDAU	Level-1-260C-UNLIM	-40 to 125	UJ
TPS3896ADRYT.A	Active	Production	SON (DRY) | 6	250 | SMALL T&R	Yes	NIPDAU	Level-1-260C-UNLIM	-40 to 125	UJ
TPS3896ADRYT.B	Active	Production	SON (DRY) | 6	250 | SMALL T&R	Yes	NIPDAU	Level-1-260C-UNLIM	-40 to 125	UJ
TPS3896ADRYTG4.A	Active	Production	SON (DRY) | 6	250 | SMALL T&R	Yes	NIPDAU	Level-1-260C-UNLIM	-40 to 125	UJ
TPS3896ADRYTG4.B	Active	Production	SON (DRY) | 6	250 | SMALL T&R	Yes	NIPDAU	Level-1-260C-UNLIM	-40 to 125	UJ
TPS3896PDRYR	Active	Production	SON (DRY) | 6	5000 | LARGE T&R	Yes	NIPDAU	Level-1-260C-UNLIM	-40 to 125	UK
TPS3896PDRYR.A	Active	Production	SON (DRY) | 6	5000 | LARGE T&R	Yes	NIPDAU	Level-1-260C-UNLIM	-40 to 125	UK
TPS3896PDRYR.B	Active	Production	SON (DRY) | 6	5000 | LARGE T&R	Yes	NIPDAU	Level-1-260C-UNLIM	-40 to 125	UK
TPS3896PDRYT	Active	Production	SON (DRY) | 6	250 | SMALL T&R	Yes	NIPDAU	Level-1-260C-UNLIM	-40 to 125	UK
TPS3896PDRYT.A	Active	Production	SON (DRY) | 6	250 | SMALL T&R	Yes	NIPDAU	Level-1-260C-UNLIM	-40 to 125	UK

Orderable part number	Status (1)	Material type (2)	Package | Pins	Package qty | Carrier	RoHS (3)	Lead finish/ Ball material (4)	MSL rating/ Peak reflow (5)	Op temp (°C)	Part marking (6)
TPS3896PDRYT.B	Active	Production	SON (DRY) | 6	250 | SMALL T&R	Yes	NIPDAU	Level-1-260C-UNLIM	-40 to 125	UK
TPS3897ADRYR	Active	Production	SON (DRY) | 6	5000 | LARGE T&R	Yes	NIPDAU | NIPDAUAG	Level-1-260C-UNLIM	-40 to 125	UL
TPS3897ADRYR.A	Active	Production	SON (DRY) | 6	5000 | LARGE T&R	Yes	NIPDAUAG	Level-1-260C-UNLIM	-40 to 125	UL
TPS3897ADRYR.B	Active	Production	SON (DRY) | 6	5000 | LARGE T&R	Yes	NIPDAUAG	Level-1-260C-UNLIM	-40 to 125	UL
TPS3897ADRYRG4.A	Active	Production	SON (DRY) | 6	5000 | LARGE T&R	Yes	NIPDAU	Level-1-260C-UNLIM	-40 to 125	UL
TPS3897ADRYRG4.B	Active	Production	SON (DRY) | 6	5000 | LARGE T&R	Yes	NIPDAU	Level-1-260C-UNLIM	-40 to 125	UL
TPS3897ADRYT	Active	Production	SON (DRY) | 6	250 | SMALL T&R	Yes	NIPDAU | NIPDAUAG	Level-1-260C-UNLIM	-40 to 125	UL
TPS3897ADRYT.A	Active	Production	SON (DRY) | 6	250 | SMALL T&R	Yes	NIPDAUAG	Level-1-260C-UNLIM	-40 to 125	UL
TPS3897ADRYT.B	Active	Production	SON (DRY) | 6	250 | SMALL T&R	Yes	NIPDAUAG	Level-1-260C-UNLIM	-40 to 125	UL
TPS3897PDRYR	Active	Production	SON (DRY) | 6	5000 | LARGE T&R	Yes	NIPDAU | NIPDAUAG	Level-1-260C-UNLIM	-40 to 125	UM
TPS3897PDRYR.A	Active	Production	SON (DRY) | 6	5000 | LARGE T&R	Yes	NIPDAUAG	Level-1-260C-UNLIM	-40 to 125	UM
TPS3897PDRYR.B	Active	Production	SON (DRY) | 6	5000 | LARGE T&R	Yes	NIPDAUAG	Level-1-260C-UNLIM	-40 to 125	UM
TPS3897PDRYRG4.A	Active	Production	SON (DRY) | 6	5000 | LARGE T&R	Yes	NIPDAU	Level-1-260C-UNLIM	-40 to 125	UM
TPS3897PDRYRG4.B	Active	Production	SON (DRY) | 6	5000 | LARGE T&R	Yes	NIPDAU	Level-1-260C-UNLIM	-40 to 125	UM
TPS3897PDRYT	Active	Production	SON (DRY) | 6	250 | SMALL T&R	Yes	NIPDAU | NIPDAUAG	Level-1-260C-UNLIM	-40 to 125	UM
TPS3897PDRYT.A	Active	Production	SON (DRY) | 6	250 | SMALL T&R	Yes	NIPDAUAG	Level-1-260C-UNLIM	-40 to 125	UM
TPS3897PDRYT.B	Active	Production	SON (DRY) | 6	250 | SMALL T&R	Yes	NIPDAUAG	Level-1-260C-UNLIM	-40 to 125	UM
TPS3898ADRYR	Active	Production	SON (DRY) | 6	5000 | LARGE T&R	Yes	NIPDAU	Level-1-260C-UNLIM	-40 to 125	UH
TPS3898ADRYR.A	Active	Production	SON (DRY) | 6	5000 | LARGE T&R	Yes	NIPDAU	Level-1-260C-UNLIM	-40 to 125	UH
TPS3898ADRYR.B	Active	Production	SON (DRY) | 6	5000 | LARGE T&R	Yes	NIPDAU	Level-1-260C-UNLIM	-40 to 125	UH
TPS3898ADRYRG4.A	Active	Production	SON (DRY) | 6	5000 | LARGE T&R	Yes	NIPDAU	Level-1-260C-UNLIM	-40 to 125	UH
TPS3898ADRYRG4.B	Active	Production	SON (DRY) | 6	5000 | LARGE T&R	Yes	NIPDAU	Level-1-260C-UNLIM	-40 to 125	UH
TPS3898ADRYT	Active	Production	SON (DRY) | 6	250 | SMALL T&R	Yes	NIPDAU	Level-1-260C-UNLIM	-40 to 125	UH
TPS3898ADRYT.A	Active	Production	SON (DRY) | 6	250 | SMALL T&R	Yes	NIPDAU	Level-1-260C-UNLIM	-40 to 125	UH
TPS3898ADRYT.B	Active	Production	SON (DRY) | 6	250 | SMALL T&R	Yes	NIPDAU	Level-1-260C-UNLIM	-40 to 125	UH
TPS3898PDRYR	Active	Production	SON (DRY) | 6	5000 | LARGE T&R	Yes	NIPDAU	Level-1-260C-UNLIM	-40 to 125	UI
TPS3898PDRYR.A	Active	Production	SON (DRY) | 6	5000 | LARGE T&R	Yes	NIPDAU	Level-1-260C-UNLIM	-40 to 125	UI
TPS3898PDRYR.B	Active	Production	SON (DRY) | 6	5000 | LARGE T&R	Yes	NIPDAU	Level-1-260C-UNLIM	-40 to 125	UI
TPS3898PDRYRG4.A	Active	Production	SON (DRY) | 6	5000 | LARGE T&R	Yes	NIPDAU	Level-1-260C-UNLIM	-40 to 125	UI
TPS3898PDRYRG4.B	Active	Production	SON (DRY) | 6	5000 | LARGE T&R	Yes	NIPDAU	Level-1-260C-UNLIM	-40 to 125	UI
TPS3898PDRYT	Active	Production	SON (DRY) | 6	250 | SMALL T&R	Yes	NIPDAU	Level-1-260C-UNLIM	-40 to 125	UI

Orderable part number	Status (1)	Material type (2)	Package | Pins	Package qty | Carrier	RoHS (3)	Lead finish/ Ball material (4)	MSL rating/ Peak reflow (5)	Op temp (°C)	Part marking (6)
TPS3898PDRYT.A	Active	Production	SON (DRY) | 6	250 | SMALL T&R	Yes	NIPDAU	Level-1-260C-UNLIM	-40 to 125	UI
TPS3898PDRYT.B	Active	Production	SON (DRY) | 6	250 | SMALL T&R	Yes	NIPDAU	Level-1-260C-UNLIM	-40 to 125	UI

(1) **Status:** For more details on status, see our product life cycle.

(2) **Material type:** When designated, preproduction parts are prototypes/experimental devices, and are not yet approved or released for full production. Testing and final process, including without limitation quality assurance, reliability performance testing, and/or process qualification, may not yet be complete, and this item is subject to further changes or possible discontinuation. If available for ordering, purchases will be subject to an additional waiver at checkout, and are intended for early internal evaluation purposes only. These items are sold without warranties of any kind.

(3) **RoHS values:** Yes, No, RoHS Exempt. See the TI RoHS Statement for additional information and value definition.

(4) **Lead finish/Ball material:** Parts may have multiple material finish options. Finish options are separated by a vertical ruled line. Lead finish/Ball material values may wrap to two lines if the finish value exceeds the maximum column width.

(5) **MSL rating/Peak reflow:** The moisture sensitivity level ratings and peak solder (reflow) temperatures. In the event that a part has multiple moisture sensitivity ratings, only the lowest level per JEDEC standards is shown. Refer to the shipping label for the actual reflow temperature that will be used to mount the part to the printed circuit board.

(6) **Part marking:** There may be an additional marking, which relates to the logo, the lot trace code information, or the environmental category of the part.

Multiple part markings will be inside parentheses. Only one part marking contained in parentheses and separated by a "~" will appear on a part. If a line is indented then it is a continuation of the previous line and the two combined represent the entire part marking for that device.

Important Information and Disclaimer: The information provided on this page represents TI's knowledge and belief as of the date that it is provided. TI bases its knowledge and belief on information provided by third parties, and makes no representation or warranty as to the accuracy of such information. Efforts are underway to better integrate information from third parties. TI has taken and continues to take reasonable steps to provide representative and accurate information but may not have conducted destructive testing or chemical analysis on incoming materials and chemicals. TI and TI suppliers consider certain information to be proprietary, and thus CAS numbers and other limited information may not be available for release.

In no event shall TI's liability arising out of such information exceed the total purchase price of the TI part(s) at issue in this document sold by TI to Customer on an annual basis.

TAPE AND REEL INFORMATION

REEL DIMENSIONS

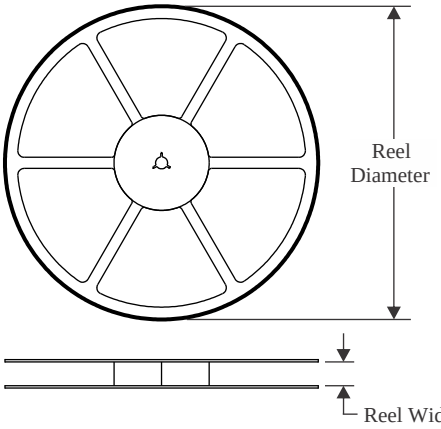

TAPE DIMENSIONS

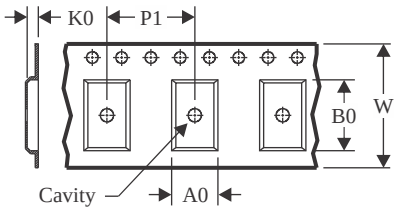

A0	Dimension designed to accommodate the component width
B0	Dimension designed to accommodate the component length
K0	Dimension designed to accommodate the component thickness
W	Overall width of the carrier tape
P1	Pitch between successive cavity centers

QUADRANT ASSIGNMENTS FOR PIN 1 ORIENTATION IN TAPE

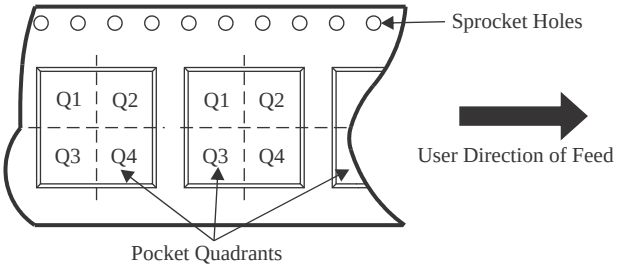

*All dimensions are nominal

Device	Package Type	Package Drawing	Pins	SPQ	Reel Diameter (mm)	Reel Width W1 (mm)	A0 (mm)	B0 (mm)	K0 (mm)	P1 (mm)	W (mm)	Pin1 Quadrant
TPS3895ADRYR	SON	DRY	6	5000	180.0	9.5	1.2	1.65	0.7	4.0	8.0	Q1
TPS3895ADRYT	SON	DRY	6	250	180.0	9.5	1.2	1.65	0.7	4.0	8.0	Q1
TPS3895PDRYR	SON	DRY	6	5000	180.0	9.5	1.2	1.65	0.7	4.0	8.0	Q1
TPS3895PDRYT	SON	DRY	6	250	180.0	9.5	1.2	1.65	0.7	4.0	8.0	Q1
TPS3896ADRYR	SON	DRY	6	5000	180.0	9.5	1.2	1.65	0.7	4.0	8.0	Q1
TPS3896ADRYT	SON	DRY	6	250	180.0	9.5	1.2	1.65	0.7	4.0	8.0	Q1
TPS3896PDRYR	SON	DRY	6	5000	180.0	9.5	1.2	1.65	0.7	4.0	8.0	Q1
TPS3896PDRYT	SON	DRY	6	250	180.0	9.5	1.2	1.65	0.7	4.0	8.0	Q1
TPS3897ADRYR	SON	DRY	6	5000	180.0	9.5	1.2	1.65	0.7	4.0	8.0	Q1
TPS3897ADRYT	SON	DRY	6	250	178.0	8.4	1.2	1.65	0.7	4.0	8.0	Q1
TPS3897ADRYT	SON	DRY	6	250	180.0	9.5	1.2	1.65	0.7	4.0	8.0	Q1
TPS3897PDRYR	SON	DRY	6	5000	178.0	8.4	1.2	1.65	0.7	4.0	8.0	Q1
TPS3897PDRYR	SON	DRY	6	5000	180.0	9.5	1.2	1.65	0.7	4.0	8.0	Q1
TPS3897PDRYT	SON	DRY	6	250	178.0	8.4	1.2	1.65	0.7	4.0	8.0	Q1
TPS3897PDRYT	SON	DRY	6	250	180.0	9.5	1.2	1.65	0.7	4.0	8.0	Q1
TPS3898ADRYR	SON	DRY	6	5000	180.0	9.5	1.2	1.65	0.7	4.0	8.0	Q1

Device	Package Type	Package Drawing	Pins	SPQ	Reel Diameter (mm)	Reel Width W1 (mm)	A0 (mm)	B0 (mm)	K0 (mm)	P1 (mm)	W (mm)	Pin1 Quadrant
TPS3898ADRYT	SON	DRY	6	250	180.0	9.5	1.2	1.65	0.7	4.0	8.0	Q1
TPS3898PDRYR	SON	DRY	6	5000	180.0	9.5	1.2	1.65	0.7	4.0	8.0	Q1
TPS3898PDRYT	SON	DRY	6	250	180.0	9.5	1.2	1.65	0.7	4.0	8.0	Q1

TAPE AND REEL BOX DIMENSIONS

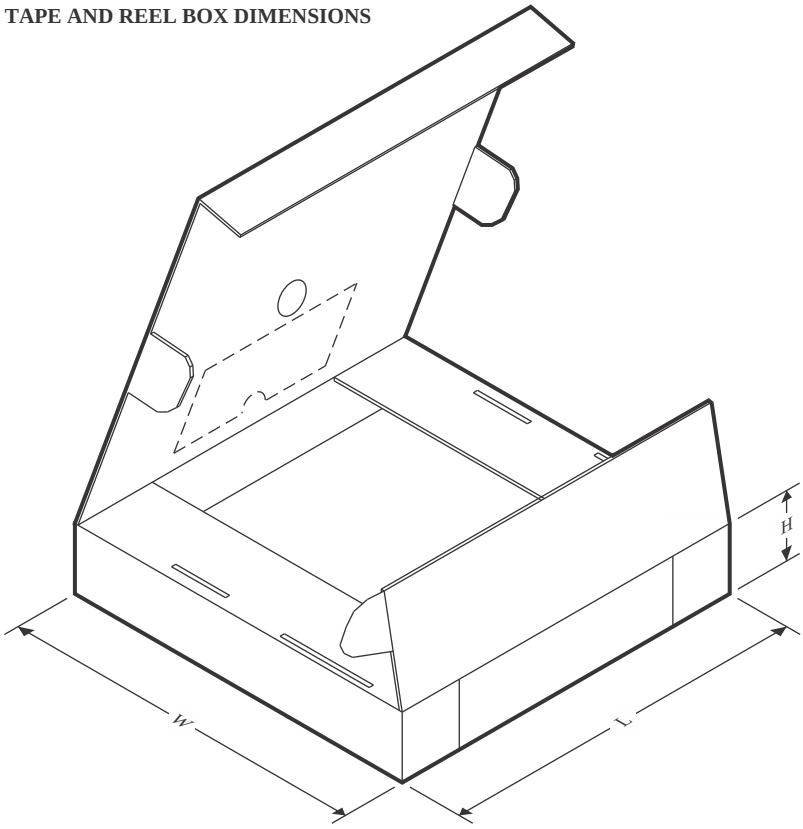

*All dimensions are nominal

Device	Package Type	Package Drawing	Pins	SPQ	Length (mm)	Width (mm)	Height (mm)
TPS3895ADRYR	SON	DRY	6	5000	189.0	185.0	36.0
TPS3895ADRYT	SON	DRY	6	250	189.0	185.0	36.0
TPS3895PDRYR	SON	DRY	6	5000	189.0	185.0	36.0
TPS3895PDRYT	SON	DRY	6	250	189.0	185.0	36.0
TPS3896ADRYR	SON	DRY	6	5000	189.0	185.0	36.0
TPS3896ADRYT	SON	DRY	6	250	189.0	185.0	36.0
TPS3896PDRYR	SON	DRY	6	5000	189.0	185.0	36.0
TPS3896PDRYT	SON	DRY	6	250	189.0	185.0	36.0
TPS3897ADRYR	SON	DRY	6	5000	189.0	185.0	36.0
TPS3897ADRYT	SON	DRY	6	250	205.0	200.0	33.0
TPS3897ADRYT	SON	DRY	6	250	189.0	185.0	36.0
TPS3897PDRYR	SON	DRY	6	5000	205.0	200.0	33.0
TPS3897PDRYR	SON	DRY	6	5000	189.0	185.0	36.0
TPS3897PDRYT	SON	DRY	6	250	205.0	200.0	33.0
TPS3897PDRYT	SON	DRY	6	250	189.0	185.0	36.0
TPS3898ADRYR	SON	DRY	6	5000	189.0	185.0	36.0
TPS3898ADRYT	SON	DRY	6	250	189.0	185.0	36.0
TPS3898PDRYR	SON	DRY	6	5000	189.0	185.0	36.0

Device	Package Type	Package Drawing	Pins	SPQ	Length (mm)	Width (mm)	Height (mm)
TPS3898PDRYT	SON	DRY	6	250	189.0	185.0	36.0

Images above are just a representation of the package family, actual package may vary.
Refer to the product data sheet for package details.

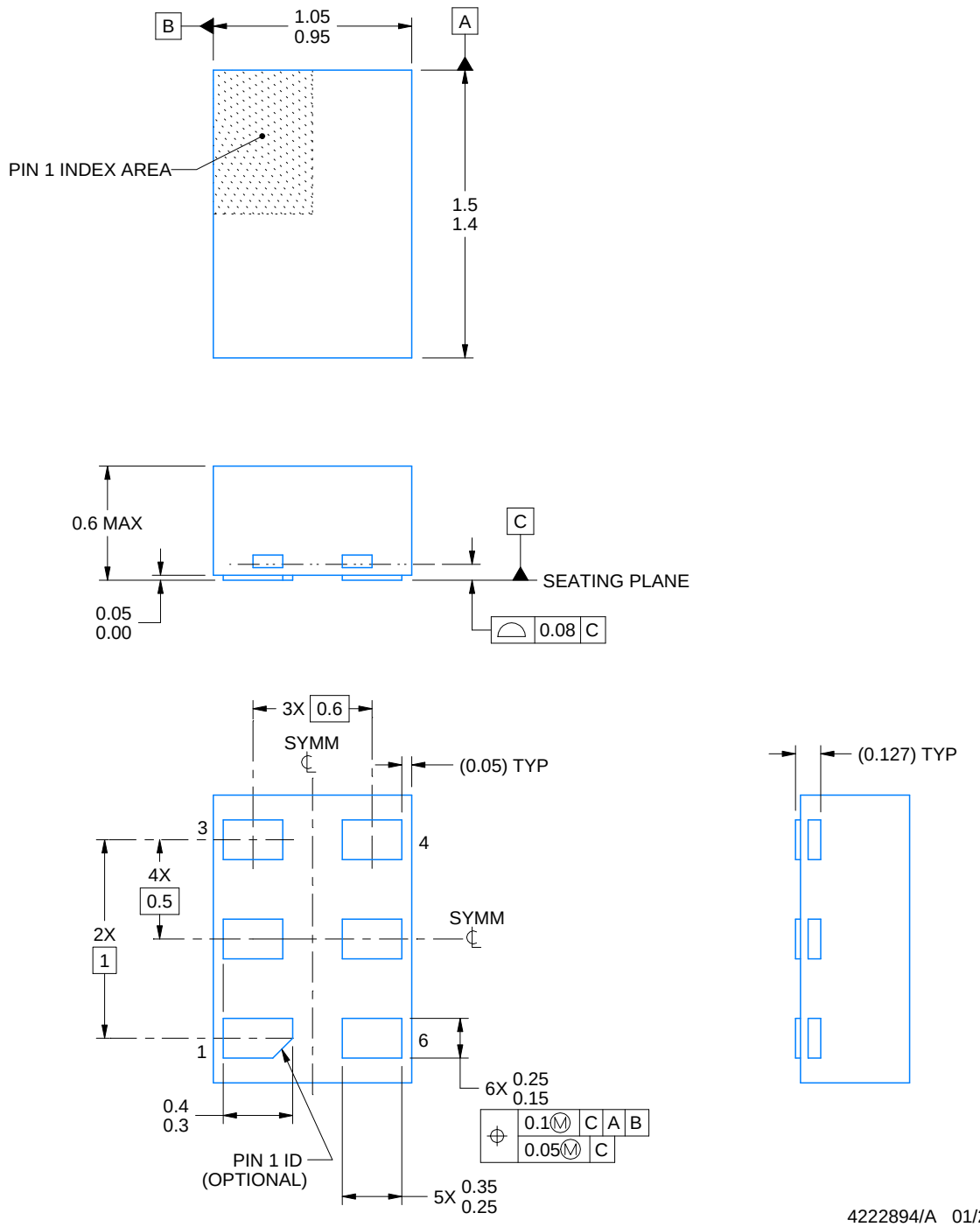

NOTES:

1. All linear dimensions are in millimeters. Any dimensions in parenthesis are for reference only. Dimensioning and tolerancing per ASME Y14.5M.
2. This drawing is subject to change without notice.

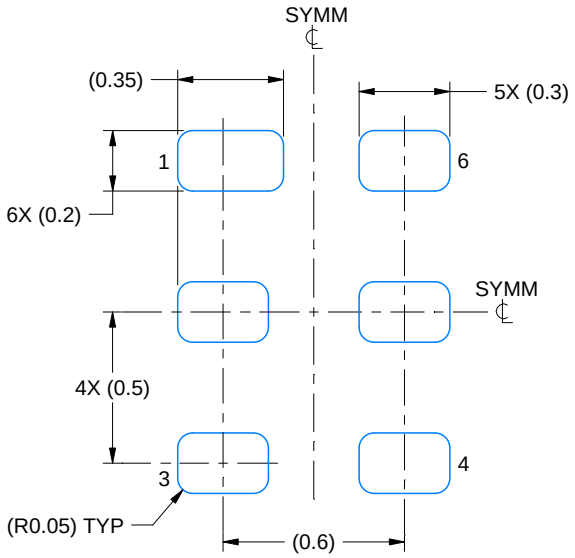

LAND PATTERN EXAMPLE
1:1 RATIO WITH PKG SOLDER PADS
EXPOSED METAL SHOWN
SCALE:40X

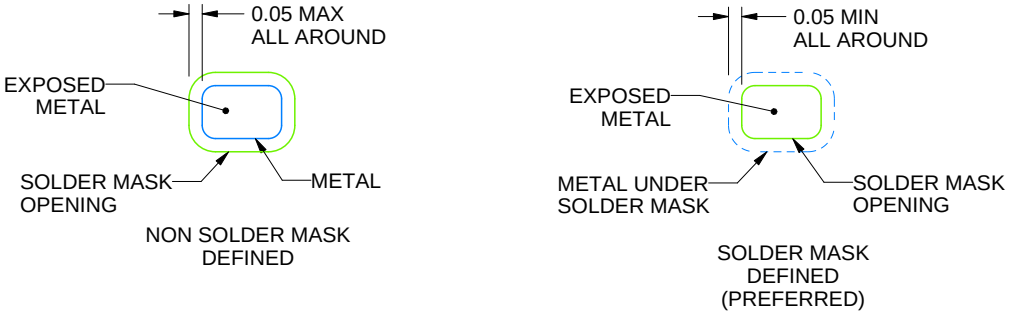

SOLDER MASK DETAILS

4222894/A 01/2018

NOTES: (continued)

3. For more information, see QFN/SON PCB application report in literature No. SLUA271 (www.ti.com/lit/slua271).

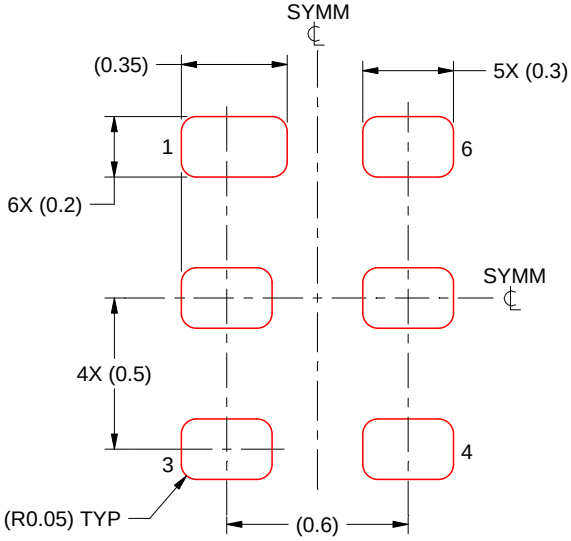

SOLDER PASTE EXAMPLE
BASED ON 0.075 - 0.1 mm THICK STENCIL
SCALE:40X

4222894/A 01/2018

NOTES: (continued)

4. Laser cutting apertures with trapezoidal walls and rounded corners may offer better paste release. IPC-7525 may have alternate design recommendations.

IMPORTANT NOTICE AND DISCLAIMER

TI PROVIDES TECHNICAL AND RELIABILITY DATA (INCLUDING DATA SHEETS), DESIGN RESOURCES (INCLUDING REFERENCE DESIGNS), APPLICATION OR OTHER DESIGN ADVICE, WEB TOOLS, SAFETY INFORMATION, AND OTHER RESOURCES “AS IS” AND WITH ALL FAULTS, AND DISCLAIMS ALL WARRANTIES, EXPRESS AND IMPLIED, INCLUDING WITHOUT LIMITATION ANY IMPLIED WARRANTIES OF MERCHANTABILITY, FITNESS FOR A PARTICULAR PURPOSE OR NON-INFRINGEMENT OF THIRD PARTY INTELLECTUAL PROPERTY RIGHTS.

These resources are intended for skilled developers designing with TI products. You are solely responsible for (1) selecting the appropriate TI products for your application, (2) designing, validating and testing your application, and (3) ensuring your application meets applicable standards, and any other safety, security, regulatory or other requirements.

These resources are subject to change without notice. TI grants you permission to use these resources only for development of an application that uses the TI products described in the resource. Other reproduction and display of these resources is prohibited. No license is granted to any other TI intellectual property right or to any third party intellectual property right. TI disclaims responsibility for, and you will fully indemnify TI and its representatives against, any claims, damages, costs, losses, and liabilities arising out of your use of these resources.

TI’s products are provided subject to TI’s Terms of Sale or other applicable terms available either on ti.com or provided in conjunction with such TI products. TI’s provision of these resources does not expand or otherwise alter TI’s applicable warranties or warranty disclaimers for TI products.

TI objects to and rejects any additional or different terms you may have proposed.

Mailing Address: Texas Instruments, Post Office Box 655303, Dallas, Texas 75265
Copyright © 2025, Texas Instruments Incorporated