TRF7960A Multiprotocol Fully Integrated 13.56-MHz RFID Reader/Writer IC

1 Device Overview

1.1 Features

- Completely Integrated Protocol Handling for ISO/IEC 15693, ISO/IEC 18000-3, ISO/IEC 14443A, ISO/IEC 14443B, NFC Forum Device Types 2 to 5, and FeliCa™
- Input Voltage Range: 2.7 VDC to 5.5 VDC
- Programmable Output Power: +20 dBm (100 mW) or +23 dBm (200 mW)
- Programmable I/O Voltage Levels: 1.8 VDC to 5.5 VDC
- Programmable System Clock Frequency Output (RF, RF/2, RF/4)
- Programmable Modulation Depth
- Dual Receiver Architecture With RSSI for Elimination of "Read Holes" and Adjacent Reader System or Ambient In-Band Noise Detection
- Programmable Power Modes for Ultra-Low-Power System Design (Power Down <0.5 µA)
- Parallel or SPI Interface
- Integrated Voltage Regulator for Microcontroller Supply
- Temperature Range: –40°C to 110°C
- 32-Pin QFN Package (5 mm × 5 mm) (RHB)

1.2 Applications

- Secure Access Control
- Product Authentication
- Digital Door Locks
- Public Transport or Event Ticketing
- Medical Systems
- Remote Sensor Applications

1.3 Description

The TRF7960A device is an integrated analog front-end (AFE) and multiprotocol data-framing device for a 13.56-MHz RFID reader/writer system that supports ISO/IEC 14443 A and B, Sony FeliCa, and ISO/IEC 15693. Built-in programming options make it suitable for a wide range of applications for proximity and vicinity identification systems.

The reader is configured by selecting the desired protocol in the control registers. Direct access to all control registers allows fine tuning of various reader parameters as needed.

The TRF7960A device supports data rates up to 848 kbps with all framing and synchronization tasks for the ISO protocols onboard. The device also supports reader/writer mode for NFC Forum tag types 1, 2, 3, 4, and 5. NFC Forum tag types 2, 3, 4, and 5 are supported with the built-in protocol decoders used in Direct Mode 2. NFC Forum tag type 1 requires the use of Direct Mode 0. Other standards and custom protocols can also be implemented by using Direct Mode 0. Direct Mode 0 lets the user fully control the AFE and also gain access to the raw subcarrier data or the unframed, but already ISO-formatted, data and the associated (extracted) clock signal.

The receiver system has a dual-input receiver architecture to maximize communication robustness. The receivers also include various automatic and manual gain control options. The received signal strength from transponders, ambient sources, or internal levels is available in the RSSI register.

A SPI or parallel interface can be used for the communication between the MCU and the TRF7960A reader. When the built-in hardware encoders and decoders are used, transmit and receive functions use a 12-byte FIFO register. For direct transmit or receive functions, the encoders or decoders can be bypassed so the MCU can process the data in real time.

The TRF7960A device supports a wide supply voltage range of 2.7 V to 5.5 V and data communication levels from 1.8 V to 5.5 V for the MCU I/O interface.

The transmitter has selectable output power levels of 100 mW (+20 dBm) or 200 mW (+23 dBm) equivalent into a 50-Ω load when using a 5-V supply and supports OOK and ASK modulation with selectable modulation depth.

An IMPORTANT NOTICE at the end of this data sheet addresses availability, warranty, changes, use in safety-critical applications, intellectual property matters and other important disclaimers. PRODUCTION DATA.

The built-in programmable auxiliary voltage regulator delivers up to 20 mA to supply an MCU and additional external circuits within the reader system.

To evaluate the latest products in the TRF79xx product family – TRF7970A and TRF7964A – see the NFC Transceiver Booster Pack.

Documentation, Tools, Reference Designs, and Software, Samples

Device Information(1)

PART NUMBER	PACKAGE	BODY SIZE
TRF7960ARHB	VQFN (32)	5 mm × 5 mm

(1) For more information, see Section 9, *Mechanical Packaging and Orderable Information*.

1.4 Application Block Diagram

Figure 1-1 shows a typical application block diagram.

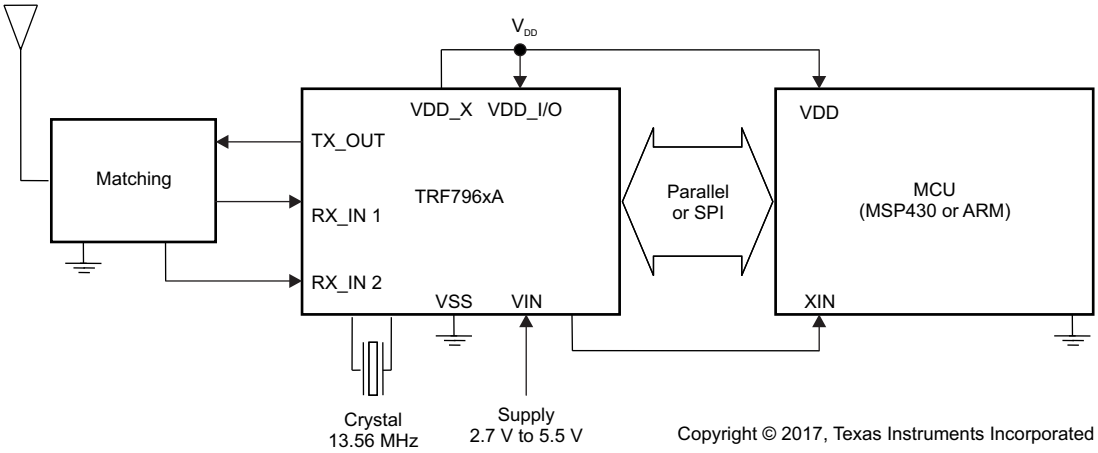

Figure 1-1. Application Block Diagram

Copyright © 2011–2020, Texas Instruments Incorporated

Table of Contents

1 Device Overview **1**
1.1 Features 1
1.2 Applications 1
1.3 Description 1
1.4 Application Block Diagram 2
2 Revision History **4**
3 Device Characteristics **5**
3.1 Related Products 5
4 Terminal Configuration and Functions **6**
4.1 Pin Diagrams 6
4.2 Signal Descriptions 6
5 Specifications **8**
5.1 Absolute Maximum Ratings 8
5.2 ESD Ratings 8
5.3 Recommended Operating Conditions 8
5.4 Electrical Characteristics 9
5.5 Thermal Resistance Characteristics 10
5.6 Switching Characteristics 10
6 Detailed Description **11**
6.1 Functional Block Diagram 11
6.2 Power Supplies 11
6.3 Supply Arrangements 12
6.4 Supply Regulator Settings 13
6.5 Power Modes 14
6.6 Receiver – Analog Section 17
6.7 Receiver – Digital Section 18
6.8 Oscillator Section 21
6.9 Transmitter - Analog Section 22
6.10 Transmitter - Digital Section 22
6.11 Transmitter – External Power Amplifier or Subcarrier Detector 23
6.12 Communication Interface 23
6.13 Direct Commands from MCU to Reader 42
6.14 Register Description 45
7 Applications, Implementation, and Layout **62**
7.1 TRF7960A Reader System Using SPI With SS Mode 62
7.2 System Design 63
8 Device and Documentation Support **65**
8.1 Getting Started and Next Steps 65
8.2 Device Nomenclature 65
8.3 Tools and Software 66
8.4 Documentation Support 66
8.5 Support Resources 66
8.6 Trademarks 66
8.7 Electrostatic Discharge Caution 67
8.8 Export Control Notice 67
8.9 Glossary 67
9 Mechanical, Packaging, and Orderable Information **68**

Copyright © 2011–2020, Texas Instruments Incorporated

2 Revision History

NOTE: Page numbers for previous revisions may differ from page numbers in the current version.

Changes from May 18, 2017 to March 11, 2020	Page
• Removed references to obsolete EVMs	2
• Corrected typo (changed "...and 3.4 V for VDD_A and VDD_A" to "...and 3.4 V for VDD_A and VDD_X") in Section 6.3, *Supply Arrangements*	13

Copyright © 2011–2020, Texas Instruments Incorporated

3 Device Characteristics

Table 3-1 lists the supported protocols.

Table 3-1. Supported Protocols

DEVICE	ISO/IEC 14443 A AND B				ISO/IEC 15693	ISO/IEC 18000-3 MODE 1	NFC Forum TYPES 1 TO 5
	106 kbps	212 kbps	424 kbps	848 kbps			
TRF7960A	✓	✓	✓	✓	✓	✓	✓

3.1 Related Products

For information about other devices in this family of products or related products, see the following links.

Products for TI Wireless Connectivity Connect more with the industry's broadest wireless connectivity portfolio.

Products for NFC / RFID TI provides one of the industry's most differentiated NFC and RFID product portfolios and is your solution to meet a broad range of NFC connectivity and RFID identification needs.

Companion Products for TRF7960A Review products that are frequently purchased or used with this product.

Reference Designs for TRF7960A The TI Designs Reference Design Library is a robust reference design library that spans analog, embedded processor, and connectivity. Created by TI experts to help you jump start your system design, all TI Designs include schematic or block diagrams, BOMs, and design files to speed your time to market. Search and download designs at ti.com/tidesigns.

4 Terminal Configuration and Functions

4.1 Pin Diagrams

Figure 4-1 shows the pinout for the 32-pin RHB package.

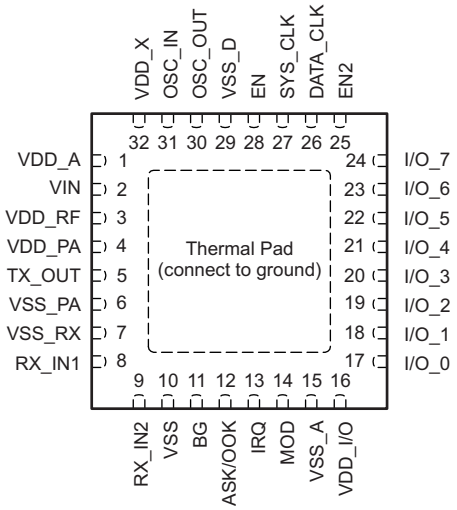

Figure 4-1. 32-Pin RHB Package (Top View)

4.2 Signal Descriptions

Table 4-1 describes the signals.

Table 4-1. Signal Descriptions

TERMINAL		TYPE (1)	DESCRIPTION
NO.	NAME		
1	VDD_A	OUT	Internal regulated supply (2.7 V to 3.4 V) for analog circuitry
2	VIN	SUP	External supply input to chip (2.7 V to 5.5 V)
3	VDD_RF	OUT	Internal regulated supply (2.7 V to 5 V); normally connected to VDD_PA (pin 4)
4	VDD_PA	INP	Supply for PA; normally connected externally to VDD_RF (pin 3)
5	TX_OUT	OUT	RF output (selectable output power: 100 mW or 200 mW, with V_{DD} = 5 V)
6	VSS_PA	SUP	Negative supply for PA; normally connected to circuit ground
7	VSS_RX	SUP	Negative supply for receive inputs; normally connected to circuit ground
8	RX_IN1	INP	Main receive input
9	RX_IN2	INP	Auxiliary receive input
10	VSS	SUP	Chip substrate ground
11	BAND_GAP	OUT	Bandgap voltage (V_{BG} = 1.6 V); internal analog voltage reference
12	ASK/OOK	BID	Selection between ASK and OOK modulation (0 = ASK, 1 = OOK) for direct mode 0 and 1. It can be configured as an output to provide the received analog signal output.
13	IRQ	OUT	Interrupt request
14	MOD	INP	External data modulation input for direct mode 0 or 1
		OUT	Subcarrier digital data output (see register 0x1A and 0x1B definitions)
15	VSS_A	SUP	Negative supply for internal analog circuits. Connected to GND.
16	VDD_I/O	INP	Supply for I/O communications (1.8 V to VIN) level shifter. VIN should be never exceeded.
17	I/O_0	BID	I/O pin for parallel communication
18	I/O_1	BID	I/O pin for parallel communication
19	I/O_2	BID	I/O pin for parallel communication

(1) SUP = Supply, INP = Input, BID = Bidirectional, OUT = Output

Copyright © 2011–2020, Texas Instruments Incorporated

Table 4-1. Signal Descriptions (continued)

TERMINAL		TYPE (1)	DESCRIPTION
NO.	NAME		
20	I/O_3	BID	I/O pin for parallel communication
21	I/O_4	BID	I/O pin for parallel communication Slave select signal in SPI mode
22	I/O_5	BID	I/O pin for parallel communication Data clock output in direct mode 1
23	I/O_6	BID	I/O pin for parallel communication MISO for serial communication (SPI) Serial bit data output in direct mode 1 or subcarrier signal in direct mode 0
24	I/O_7	BID	I/O pin for parallel communication. MOSI for serial communication (SPI)
25	EN2	INP	Selection of power down mode. If EN2 is connected to VIN, then VDD_X is active during power down mode 2 (for example, to supply the MCU).
26	DATA_CLK	INP	Data clock input for MCU communication (parallel and serial)
27	SYS_CLK	OUT	If EN = 1 (EN2 = don't care) the system clock for the MCU is configured with register 0x09 (off, 3.39 MHz, 6.78 MHz, or 13.56 MHz). If EN = 0 and EN2 = 1, the system clock is set to 60 kHz.
28	EN	INP	Chip enable input (if EN = 0, then the chip is in sleep or power-down mode)
29	VSS_D	SUP	Negative supply for internal digital circuits
30	OSC_OUT	OUT	Crystal or oscillator output
31	OSC_IN	INP	Crystal or oscillator input
32	VDD_X	OUT	Internally regulated supply (2.7 V to 3.4 V) for digital circuit and external devices (for example, an MCU)
PAD	PAD	SUP	Chip substrate ground

5 Specifications

5.1 Absolute Maximum Ratings (1)

over operating free-air temperature range (unless otherwise noted) (2)

		MIN	MAX	UNIT
Input voltage range, V_{IN}		–0.3	6	V
Maximum current, I_{IN}			150	mA
Maximum operating virtual junction temperature, T_J (3)	Any condition		140	°C
	Continuous operation, long-term reliability		125	
Storage temperature, T_{STG}		–55	150	°C

(1) Stresses beyond those listed under *Absolute Maximum Ratings* may cause permanent damage to the device. These are stress ratings only and functional operation of the device at these or any other conditions beyond those indicated under *Recommended Operating Conditions* are not implied. Exposure to absolute-maximum-rated conditions for extended periods may affect device reliability.
(2) All voltage values are with respect to substrate ground terminal VSS.
(3) The maximum junction temperature for continuous operation is limited by package constraints. Operation above this temperature may result in reduced reliability or lifetime of the device.

5.2 ESD Ratings

		VALUE	UNIT
$V_{(ESD)}$ Electrostatic discharge	Human-body model (HBM), per ANSI/ESDA/JEDEC JS-001 (1)	±2000	V
	Charged-device model (CDM), per JEDEC specification JESD22-C101 (2)	±500	
	Machine model (MM)	±200	

(1) JEDEC document JEP155 states that 500-V HBM allows safe manufacturing with a standard ESD control process.
(2) JEDEC document JEP157 states that 250-V CDM allows safe manufacturing with a standard ESD control process.

5.3 Recommended Operating Conditions

over operating free-air temperature range (unless otherwise noted)

		MIN	NOM	MAX	UNIT
V_{IN}	Operating input voltage	2.7	5	5.5	V
T_A	Operating ambient temperature	–40	25	110	°C
T_J	Operating virtual junction temperature	–40	25	125	°C

Copyright © 2011–2020, Texas Instruments Incorporated

5.4 Electrical Characteristics

TYP operating conditions are T_A = 25°C, V_{IN} = 5 V, full-power mode (unless otherwise noted)
MIN and MAX operating conditions are over recommended ranges of supply voltage and operating free-air temperature (unless otherwise noted)

PARAMETER		TEST CONDITIONS	MIN	TYP	MAX	UNIT
I_{PD1}	Supply current in power down mode 1	All building blocks disabled, including supply-voltage regulators; measured after 500-ms settling time (EN = 0, EN2 = 0)		<0.5	5	µA
I_{PD2}	Supply current in power down mode 2 (sleep mode)	The SYS_CLK generator and VDD_X remain active to support external circuitry, measured after 100-ms settling time (EN = 0, EN2 = 1)		120	200	µA
I_{STBY}	Supply current in standby mode	Oscillator running, supply-voltage regulators in low-consumption mode (EN = 1, EN2 = x)		1.9	3.5	mA
I_{ON1}	Supply current without antenna driver current	Oscillator, regulators, RX, and AGC are active, TX is off		10.5	14	mA
I_{ON2}	Supply current in TX (half power)	Oscillator, regulators, RX, AGC, and TX active, P_{OUT} = 100 mW		70	78	mA
I_{ON3}	Supply current in TX (full power)	Oscillator, regulators, RX, AGC, and TX active, P_{OUT} = 200 mW		130	170	mA
V_{POR}	Power-on reset voltage	Input voltage at VIN	1.4	2	2.6	V
V_{BG}	Bandgap voltage (pin 11)	Internal analog reference voltage	1.5	1.6	1.7	V
V_{DD_A}	Regulated output voltage for analog circuitry (pin 1)	V_{IN} = 5 V	3.1	3.5	3.8	V
V_{DD_X}	Regulated supply for external circuitry	Output voltage pin 32, V_{IN} = 5 V	3.1	3.4	3.8	V
I_{VDD_Xmax}	Maximum output current of VDD_X	Output current pin 32, V_{IN} = 5 V			20	mA
R_{RFOUT}	Antenna driver output resistance (1)	Half-power mode, V_{IN} = 2.7 V to 5.5 V		8	12	Ω
		Full-power mode, V_{IN} = 2.7 V to 5.5 V		4	6	
R_{RFIN}	RX_IN1 and RX_IN2 input resistance		4	10	20	kΩ
V_{RF_INmax}	Maximum RF input voltage at RX_IN1 or RX_IN2	V_{RF_INmax} should not exceed VIN		3.5		V_{pp}
V_{RF_INmin}	Minimum RF input voltage at RX_IN1 or RX_IN2 (input sensitivity) (2)	$f_{SUBCARRIER}$ = 424 kHz		1.4	2.5	mV_{pp}
		$f_{SUBCARRIER}$ = 848 kHz		2.1	3	
f_{SYS_CLK}	SYS_CLK frequency	In power mode 2, EN = 0, EN2 = 1	25	60	120	kHz
f_C	Carrier frequency	Defined by external crystal		13.56		MHz
$t_{CRYSTAL}$	Crystal run-in time	Time until oscillator stable bit is set (register 0x0F) (3)		5		ms
f_{D_CLKmax}	Maximum DATA_CLK frequency (4)	Depends on capacitive load on the I/O lines, recommendation is 2 MHz (4)	2	4	10	MHz
V_{IL}	Input voltage, logic low	I/O lines, IRQ, SYS_CLK, DATA_CLK, EN, EN2			0.2 × $V_{DD_I/O}$	V
V_{IH}	Input voltage threshold, logic high	I/O lines, IRQ, SYS_CLK, DATA_CLK, EN, EN2			0.8 × $V_{DD_I/O}$	V
R_{OUT}	Output resistance, I/O_0 to I/O_7			500	800	Ω
R_{SYS_CLK}	Output resistance R_{SYS_CLK}			200	400	Ω

(1) Antenna driver output resistance
(2) Measured with subcarrier signal at RX_IN1 or RX_IN2 and measured the digital output at MOD pin with register 0x1A bit 6 = 1
(3) Depending on the crystal parameters and components
(4) Recommended DATA_CLK speed is 2 MHz; higher data clock depends on the capacitive load. Maximum SPI clock speed should not exceed 10 MHz. This clock speed is acceptable only when external capacitive load is less than 30 pF. MISO driver has a typical output resistance of 400 Ω (12-ns time constant when 30-pF load is used).

Copyright © 2011–2020, Texas Instruments Incorporated

5.5 Thermal Resistance Characteristics

PACKAGE	$R\theta_{JC}$	$R\theta_{JA}$ (1)	POWER RATING (2)	
			$T_A \leq 25°C$	$T_A \leq 85°C$
RHB (32)	31°C/W	36.4°C/W	2.7 W	1.1 W

(1) This data was taken using the JEDEC standard high-K test PCB.
(2) Power rating is determined with a junction temperature of 125°C. This is the point where distortion starts to increase substantially. Thermal management of the final PCB should strive to keep the junction temperature at or below 125°C for best performance and long-term reliability.

5.6 Switching Characteristics

over operating free-air temperature range (unless otherwise noted)

PARAMETER		TEST CONDITIONS	MIN	TYP	MAX	UNIT
$t_{LO/HI}$	DATA_CLK time, high or low (one half of DATA_CLK at 50% duty cycle)	Depends on capacitive load on the I/O lines (1)	50	62.5	250	ns
$t_{STE,LEAD}$	Slave select lead time, slave select low to clock			200		ns
$t_{STE,LAG}$	Slave select lag time, last clock to slave select high			200		ns
$t_{SU,SI}$	MOSI input data setup time		15			ns
$t_{HD,SI}$	MOSI input data hold time		15			ns
$t_{SU,SO}$	MISO input data setup time		15			ns
$t_{HD,SO}$	MISO input data hold time		15			ns
$t_{VALID,SO}$	MISO output data valid time	DATA_CLK edge to MISO valid, C_L = <30 pF	30	50	75	ns

(1) Recommended DATA_CLK speed is 2 MHz; higher data clock depends on the capacitive load. Maximum SPI clock speed should not exceed 10 MHz. This clock speed is acceptable only when external capacitive load is less than 30 pF. MISO driver has a typical output resistance of 400 Ω (12-ns time constant when 30-pF load is used).

Copyright © 2011–2020, Texas Instruments Incorporated

6 Detailed Description

6.1 Functional Block Diagram

Figure 6-1 shows the functional block diagram.

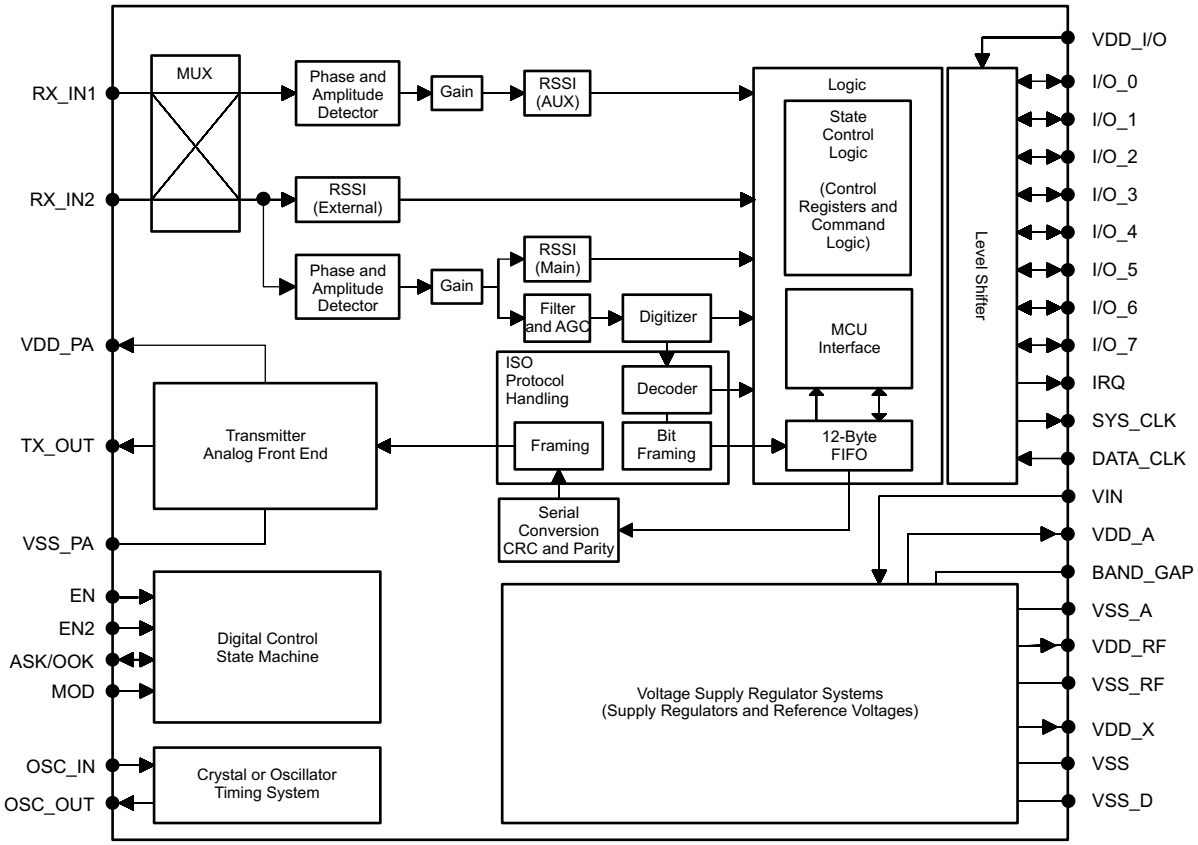

Copyright © 2017, Texas Instruments Incorporated

Figure 6-1. Functional Block Diagram

6.2 Power Supplies

The TRF7960A positive supply input VIN (pin 2) sources three internal regulators with output voltages VDD_RF, VDD_A, and VDD_X. All regulators require external bypass capacitors for supply noise filtering and must be connected as indicated in reference schematics. These regulators provide a high power supply reject ratio (PSRR) as required for RFID reader systems. All regulators are supplied by VIN (pin 2).

The regulators are not independent and have common control bits in register 0x0B for output voltage setting. The regulators can be configured to operate in either automatic or manual mode (register 0x0B, bit 7). The automatic regulator setting mode ensures an optimal compromise between PSRR and the highest possible supply voltage for RF output (to ensure maximum RF power output). The manual mode lets the user manually configure the regulator settings.

6.3 Supply Arrangements

Regulator Supply Input: VIN

The positive supply at VIN (pin 2) has an input voltage range of 2.7 V to 5.5 V. VIN provides the supply input sources for three internal regulators with the output voltages VDD_RF, VDD_A, and VDD_X. External bypass capacitors for supply noise filtering must be used (per reference schematics).

NOTE

VIN must be the highest voltage supplied to the TRF7960A.

RF Power Amplifier Regulator: VDD_RF

The VDD_RF (pin 3) regulator is supplying the RF power amplifier. The voltage regulator can be set for either 5-V or 3-V operation. External bypass capacitors for supply noise filtering must be used (per reference schematics). When configured for 5-V manual operation, the VDD_RF output voltage can be set from 4.3 V to 5 V in 100-mV steps. In 3-V manual operation, the output can be programmed from 2.7 V to 3.4 V in 100-mV steps (see Table 6-2). The maximum output current capability for 5-V operation is 150 mA and for 3-V operation is 100 mA.

Analog Supply Regulator: VDD_A

Regulator VDD_A (pin 1) supplies the analog circuits of the device. The output voltage setting depends on the input voltage and can be set for 5-V and 3-V operation. When configured for 5-V manual operation, the output voltage is fixed at 3.4 V. External bypass capacitors for supply noise filtering must be used (per reference schematics). When configured for 3-V manual operation, the VDD_A output can be set from 2.7 V to 3.4 V in 100-mV steps (see Table 6-2).

NOTE

The configuration of VDD_A and VDD_X regulators are not independent from each other. The VDD_A output current should not exceed 20 mA.

Digital Supply Regulator: VDD_X

The digital supply regulator VDD_X (pin 32) provides the power for the internal digital building blocks and can also be used to supply external electronics within the reader system. When configured for 3-V operation, the output voltage can be set from 2.7 to 3.4 V in 100-mV steps. External bypass capacitors for supply noise filtering must be used (refer to the reference schematics).

NOTE

The configuration of the VDD_A and VDD_X regulators are not independent from each other. The VDD_X output current should not exceed 20 mA.

The RF power amplifier regulator (VDD_RF), analog supply regulator (VDD_A), and digital supply regulator (VDD_X) can be configured to operate in either automatic or manual mode described in Table 6-1. The automatic regulator setting mode ensures an optimal compromise between PSRR and the highest possible supply voltage to ensure maximum RF power output.

By default, the regulators are set in automatic regulator setting mode. In this mode, the regulators are automatically set every time the system is activated by setting EN input High or each time the automatic regulator setting bit, B7 in register 0x0B is set to a 1. The action is started on the 0 to 1 transition. This means that, if the user wants to rerun the automatic setting from a state in which the automatic setting bit is already high, the automatic setting bit (B7 in register 0x0B) should be changed: 1-0-1.

Copyright © 2011–2020, Texas Instruments Incorporated

By default, the regulator setting algorithm sets the regulator outputs to a "Delta Voltage" of 250 mV below VIN, but not higher than 5 V for VDD_RF and 3.4 V for VDD_A and VDD_X. The "Delta Voltage" in automatic regulator mode can be increased up to 400 mV (for more details, see bits B0 to B2 in register 0x0B).

Power Amplifier Supply: VDD_PA

The power amplifier of the TRF7960A is supplied through VDD_PA (pin 4). The positive supply pin for the RF power amplifier is externally connected to the regulator output VDD_RF (pin 3).

I/O Level Shifter Supply: VDD_I/O

The TRF7960A has a separate supply input VDD_I/O (pin 16) for the build in I/O level shifter. The supported input voltage ranges from 1.8 V to VIN, however not exceeding 5.5 V. Pin 16 is used to supply the I/O interface pins (I/O_0 to I/O_7), IRQ, SYS_CLK, and DATA_CLK pins of the reader. In typical applications, VDD_I/O is directly connected to VDD_X while VDD_X also supplies the MCU. This ensures that the I/O signal levels of the MCU match with the logic levels of the TRF7960A.

Negative Supply Connections: VSS, VSS_RX, VSS_A, VSS_PA

The negative supply connections VSS_X of each functional block are all externally connected to GND.

The substrate connection is VSS (pin 10), the analog negative supply is VSS_A (pin 15), the logic negative supply is VSS_D (pin 29), the RF output stage negative supply is VSS_PA (pin 6), and the negative supply for the RF receiver VSS_RX (pin 7).

6.4 Supply Regulator Settings

The input supply voltage mode of the reader must be selected. This is done in the Chip Status Control register (0x00). Bit 0 in register 0x00 selects either 5-V or 3-V input supply voltage. The default configuration is 5 V, which reflects an operating supply voltage range of 4.3 V to 5.5 V. If the supply voltage is below 4.3 V, the 3-V configuration should be used.

The various regulators can be configured to operate in automatic or manual mode. This is done in the

Regulator and I/O Control register (0x0B) (see Table 6-1 and Table 6-2).

Table 6-1. Supply Regulator Setting: 5-V System

REGISTER ADDRESS	OPTION BITS SETTING IN REGULATOR CONTROL REGISTER (1)								COMMENTS
	B7	B6	B5	B4	B3	B2	B1	B0	
Automatic Mode (default)									
0B	1	x	x	x	x	x	1	1	Automatic regulator setting with 250-mV difference
0B	1	x	x	x	x	x	1	0	Automatic regulator setting with 350-mV difference
0B	1	x	x	x	x	x	0	0	Automatic regulator setting with 400-mV difference
Manual Mode									
0B	0	x	x	x	x	1	1	1	VDD_RF = 5 V, VDD_A = 3.4 V, VDD_X = 3.4 V
0B	0	x	x	x	x	1	1	0	VDD_RF = 4.9 V, VDD_A = 3.4 V, VDD_X = 3.4 V
0B	0	x	x	x	x	1	0	1	VDD_RF = 4.8 V, VDD_A = 3.4 V, VDD_X = 3.4 V
0B	0	x	x	x	x	1	0	0	VDD_RF = 4.7 V, VDD_A = 3.4 V, VDD_X = 3.4 V
0B	0	x	x	x	x	0	1	1	VDD_RF = 4.6 V, VDD_A = 3.4 V, VDD_X = 3.4 V
0B	0	x	x	x	x	0	1	0	VDD_RF = 4.5 V, VDD_A = 3.4 V, VDD_X = 3.4 V
0B	0	x	x	x	x	0	0	1	VDD_RF = 4.4 V, VDD_A = 3.4 V, VDD_X = 3.4 V
0B	0	x	x	x	x	0	0	0	VDD_RF = 4.3 V, VDD_A = 3.4 V, VDD_X = 3.4 V

(1) x = don't care

Table 6-2. Supply Regulator Setting: 3-V System

REGISTER ADDRESS	OPTION BITS SETTING IN REGULATOR CONTROL REGISTER(1)								COMMENTS
	B7	B6	B5	B4	B3	B2	B1	B0	
Automatic Mode (default)									
0B	1	x	x	x	x	x	1	1	Automatic regulator setting with 250-mV difference
0B	1	x	x	x	x	x	1	0	Automatic regulator setting with 350-mV difference
0B	1	x	x	x	x	x	0	0	Automatic regulator setting with 400-mV difference
Manual Mode									
0B	0	x	x	x	x	1	1	1	VDD_RF = 3.4 V, VDD_A = 3.4 V, VDD_X = 3.4 V
0B	0	x	x	x	x	1	1	0	VDD_RF = 3.3 V, VDD_A = 3.3 V, VDD_X = 3.3 V
0B	0	x	x	x	x	1	0	1	VDD_RF = 3.2 V, VDD_A = 3.2 V, VDD_X = 3.2 V
0B	0	x	x	x	x	1	0	0	VDD_RF = 3.1 V, VDD_A = 3.1 V, VDD_X = 3.1 V
0B	0	x	x	x	x	0	1	1	VDD_RF = 3.0 V, VDD_A = 3.0 V, VDD_X = 3.0 V
0B	0	x	x	x	x	0	1	0	VDD_RF = 2.9 V, VDD_A = 2.9 V, VDD_X = 2.9 V
0B	0	x	x	x	x	0	0	1	VDD_RF = 2.8 V, VDD_A = 2.8 V, VDD_X = 2.8 V
0B	0	x	x	x	x	0	0	0	VDD_RF = 2.7 V, VDD_A = 2.7 V, VDD_X = 2.7 V

(1) x = don't care

The regulator configuration function adjusts the regulator outputs by default to 250 mV below VIN level, but not higher than 5 V for VDD_RF, 3.4 V for VDD_A and VDD_X. This ensures the highest possible supply voltage for the RF output stage while maintaining an adequate PSRR (power supply rejection ratio).

To further improve the PSRR, it is possible to increase the target voltage difference across VDD_X and VDD_A from its default to 350 mV or even 400 mV (for details, see Regulator and I/O Control register 0x0B definition and Table 6-2.)

6.5 Power Modes

The chip has several power states, which are controlled by two input pins (EN and EN2) and several bits in the Chip Status Control register (0x00).

Table 6-3 lists the configuration for the different power modes when using a 5-V or 3-V system supply. The main reader enable signal is pin EN. When EN is set high, all of the reader regulators are enabled, the 13.56-MHz oscillator is running, and the SYS_CLK (output clock for external microcontroller) is also available.

The Regulator Control register settings shown are for optimized power out. The automatic setting (normally 0x87) is optimized for best PSRR and noise reduction.

Copyright © 2011–2020, Texas Instruments Incorporated

Table 6-3. Power Modes[(1)]

MODE	EN2	EN	CHIP STATUS CONTROL REGISTER (0X00)	REGULATOR CONTROL REGISTER (0X0B)	TRANS-MITTER	RECEIVER	SYS_CLK (13.56 MHz)	SYS_CLK (60 kHz)	VDD_X	TYPICAL CURRENT (mA)	TYPICAL POWER OUT (dBm)	TIME (FROM PREVIOUS STATE)
Mode 4 (full power) 5 VDC	x	1	21	07	On	On	On	x	On	130	23	20 to 25 µs
Mode 4 (full power) 3.3 VDC	x	1	20	07	On	On	On	x	On	67	18	
Mode 3 (half power) 5 VDC	x	1	31	07	On	On	On	x	On	70	20	20 to 25 µs
Mode 3 (half power) 3.3 VDC	x	1	30	07	On	On	On	x	On	53	15	
Mode 2 5 VDC	x	1	03	07	Off	On	On	x	On	10.5	—	20 to 25 µs
Mode 2 3.3 VDC	x	1	02	00	Off	On	On	x	On	9	—	
Mode 1 5 VDC	x	1	01	07	Off	Off	On	x	On	5	—	20 to 25 µs
Mode 1 3.3 VDC	x	1	00	00	Off	Off	On	x	On	3		
Standby mode 5 VDC	x	1	81	07	Off	Off	On	x	On	3	—	4.8 ms
Standby mode 3.3 VDC	x	1	80	00	Off	Off	On	x	On	2	—	
Sleep mode	1	0	x	x	Off	Off	Off	On	On	0.120	—	1.5 ms
Power down	0	0	x	x	Off	Off	Off	Off	Off	<0.001	—	Start

(1) x = don't care

The input pin EN2 has two functions:

- A direct connection from EN2 to VIN to ensure the availability of the regulated supply VDD_X and an auxiliary clock signal (60 kHz, SYS_CLK) for an external MCU. This mode (EN = 0, EN2 = 1) is intended for systems in which the MCU is also being supplied by the reader supply regulator (VDD_X) and the MCU clock is supplied by the SYS_CLK output of the reader. This lets the MCU supply and clock be available during sleep mode.
- EN2 enables the start-up of the reader system from complete power down (EN = 0, EN2 = 0). In this case, the EN input is being controlled by the MCU (or other system device) that is without supply voltage during complete power down (thus unable to control the EN input). A rising edge applied to the EN2 input (which has an approximately 1-V threshold level) starts the reader supply system and 13.56-MHz oscillator (identical to condition EN = 1).

When the user MCU controls EN and EN2, use a delay of 5 ms between EN and EN2. When the MCU controls only EN, TI recommends connecting EN2 to either VIN or GND, depending on the application MCU requirements for VDD_X and SYS_CLK.

NOTE

Using EN = 1 and EN2 = 1 in parallel at start-up should not be done as it may cause incorrect operation.

This start-up mode lasts until all of the regulators have settled and the 13.56-MHz oscillator has stabilized. If the EN input is set high (EN = 1) by the MCU (or other system device), the reader stays active. If the EN input is not set high (EN = 0) within 100 µs after the SYS_CLK output is switched from auxiliary clock (60 kHz) to high-frequency clock (derived from the crystal oscillator), the reader system returns to complete Power-Down Mode 1. This option can be used to wake the reader system from complete power down (PD Mode 1) by using a push-button switch or by sending a single pulse.

After the reader EN line is high, the other power modes are selected by control bits within the Chip Status Control register (0x00). The power mode options and states are listed in Table 6-3.

When EN is set high (or on rising edge of EN2 and then confirmed by EN = 1) the supply regulators are activated and the 13.56-MHz oscillator started. When the supplies are settled and the oscillator frequency is stable, the SYS_CLK output is switched from the auxiliary frequency of 60 kHz to the 13.56-MHz frequency derived from the crystal oscillator. At this time, the reader is ready to communicate and perform the required tasks. The MCU can then program the Chip Status Control register 0x00 and select the operation mode by programming the additional registers.

- Standby mode (bit 7 = 1 of register 0x00), the reader is capable of recovering to full operation in 100 µs.
- Mode 1 (active mode with RF output disabled, bit 5 = 0 and bit 1 = 0 of register 0x00) is a low-power mode that lets the reader recover to full operation within 25 µs.
- Mode 2 (active mode with only the RF receiver active, bit 1 = 1 of register 0x00) can be used to measure the external RF field (as described in RSSI measurements paragraph) if reader-to-reader anticollision is implemented.
- Mode 3 and Mode 4 (active modes with the entire RF section active, bit 5 = 1 of register 0x00) are the modes used for typical transmit and receive operations.

Copyright © 2011–2020, Texas Instruments Incorporated

6.6 Receiver – Analog Section

6.6.1 Main and Auxiliary Receiver

The TRF7960A has two receiver inputs: RX_IN1 (pin 8) and RX_IN2 (pin 9). Each of the inputs is connected to an external capacitive voltage divider to ensure that the modulated signal from the tag is available on at least one of the two inputs. This architecture eliminates any possible communication holes that may occur from the tag to the reader.

The two RX inputs (RX_IN1 and RX_IN2) are multiplexed into two receivers–the main receiver and the auxiliary receiver. Only the main receiver is used for reception; the auxiliary receiver is used for signal quality monitoring. Receiver input multiplexing is controlled by bit B3 in the Chip Status Control register (address 0x00).

After start-up, RX_IN1 is multiplexed to the main receiver which is composed of an RF envelope detection, first gain and band-pass filtering stage, second gain and filtering stage with AGC. Only the main receiver is connected to the digitizing stage which output is connected to the digital processing block. The main receiver also has an RSSI measuring stage, which measures the strength of the demodulated signal (subcarrier signal).

The primary function of the auxiliary receiver is to monitor the RX signal quality by measuring the RSSI of the demodulated subcarrier signal (internal RSSI). After start-up, RX_IN2 is multiplexed to the auxiliary receiver. The auxiliary receiver has an RF envelope detection stage, first gain and filtering with AGC stage and finally the auxiliary RSSI block.

The default MUX setting is RX_IN1 connected to the main receiver and RX_IN2 connected to the auxiliary receiver. To determine the signal quality, the response from the tag is detected by the "main" (pin RX_IN1) and "auxiliary" (pin RX_IN2) RSSI. Both values measured and stored in the RSSI level register (address 0x0F). The MCU can read the RSSI values from the TRF7960A RSSI register and decide if swapping the input signals is preferable or not. Setting B3 in the Chip Status Control register (address 0x00) to 1 connects RX_IN1 (pin 8) to the auxiliary receiver and RX_IN2 (pin 9) to the main receiver.

The main and auxiliary receiver input stages are RF envelope detectors. The RF amplitude at RX_IN1 and RX_IN2 should be approximately 3 V_{PP} for a VIN supply level greater than 3.3 V. If the VIN level is lower, the RF input peak-to-peak voltage level should not exceed the VIN level.

6.6.2 Receiver Gain and Filter Stages

The first gain and filtering stage has a nominal gain of 15 dB with an adjustable band-pass filter. The band-pass filter has programmable 3-dB corner frequencies from 110 kHz to 450 kHz for the high-pass filter and from 570 kHz to 1500 kHz for the low-pass filter. After the band-pass filter, there is another gain-and-filtering stage with a nominal gain of 8 dB and with frequency characteristics identical to the first band-pass stage.

The internal filters are configured automatically depending on the selected ISO communication standard in the ISO Control register (address 0x01). If required, additional fine tuning can be done by writing directly to the RX special setting registers (address 0x0A).

Table 6-4 shows the various settings for the receiver analog section. Setting B4, B5, B6, and B7 to 0 results in a band-pass characteristic of 240 kHz to 1.4 MHz, which is appropriate for ISO/IEC 14443 B data rate of 106 kbps, ISO/IEC 14443 A or B data rates of 212 kbps and 424 kbps, and FeliCa data rate of 424 kbps.

Table 6-4. RX Special Setting Register (0x0A)

BIT	FUNCTION	COMMENTS
B7	Band-pass filter from 110 kHz to 570 kHz	Appropriate for any 212-kHz subcarrier systems like FeliCa
B6	Band-pass filter from 200 kHz to 900 kHz	Appropriate for 424-kHz subcarrier systems (for example, used in ISO/IEC 15693).
B5	Band-pass filter from 450 kHz to 1.5 MHz	Appropriate for Manchester-coded 106-kbps 848-kHz subcarrier systems (for example, used in ISO/IEC 14443 A).
B4	Band-pass filter from 100 kHz to 1.5 MHz	Appropriate for highest bit rate (848 kbps) used in high-bit-rate ISO/IEC 14443 B. Gain is reduced by 7 dB.
B3	00 = No gain reduction 01 = Gain reduction for 5 dB 10 = Gain reduction for 10 dB 11 = Gain reduction for 15 dB	Sets the RX digital gain reduction (changing the window of the digitizing comparator).
B2		
B1	Reserved	
B0	Reserved	

6.7 Receiver – Digital Section

The output of the TRF7960A analog receiver block is a digitized subcarrier signal and is the input to the digital receiver block, which consists of two sections that partly overlap. The digitized subcarrier signal is a digital representation of the modulation signal on the RF envelope. The two sections of the digital receiver block are the protocol bit decoder section and the framing logic section.

The protocol bit decoder section converts the subcarrier coded signal into a serial bit stream and a data clock. The decoder logic is designed for maximum error tolerance. This tolerance lets the decoder section successfully decode even partly corrupted subcarrier signals that would otherwise be lost due to noise or interference.

The framing logic section formats the serial bit stream data from the protocol bit decoder stage into data bytes. During the formatting process, special signals such as the start of frame (SOF), end of frame (EOF), start of communication, and end of communication are automatically removed. The parity bits and CRC bytes are also checked and removed. The end result is "clean" or "raw" data that is then sent to the 12-byte FIFO register where it can be read by the external microcontroller system. Providing the data this way, in conjunction with the timing register settings of the TRF7960A, means the firmware developer must know about much less of the finer details of the ISO protocols to create a very robust application, especially in low-cost platforms where code space is at a premium and high performance is still required.

The start of the receive operation (successfully received SOF) sets the IRQ flags in the IRQ Status register (0x0C). The end of the receive operation is signaled to the external system MCU by setting pin 13 (IRQ) to high. When data is received in the FIFO, an interrupt is sent to the MCU to signal that there is data to be read from the FIFO. The FIFO Status register (0x1C) should be used to provide the number of bytes that should be clocked out during the actual FIFO read. Additionally, an interrupt is sent to the MCU when the received data occupies 75% of the FIFO capacity to signal that the data should be removed from the FIFO. That interrupt is triggered when the received data packet is longer than 9 bytes.

Any error in the data format, parity, or CRC is detected and notified to the external system by an interrupt request pulse. The source condition of the interrupt request pulse is available in the IRQ Status register (0x0C). The main register controlling the digital part of the receiver is the ISO Control register (0x01). By writing to this register, the user selects the protocol to be used. With each new write in this register, the default presets are reloaded in all related registers, so no further adjustments in other registers are needed for proper operation.

NOTE

If additional register setting changes are needed to fine-tune the system, set the ISO Control register (0x01) before making the additional changes.

Copyright © 2011–2020, Texas Instruments Incorporated

The framing section also supports the bit-collision detection as specified in ISO/IEC 14443 A and ISO/IEC 15693. When a bit collision is detected, an interrupt request is sent and a flag is set in the IRQ Status register (0x0C). For ISO/IEC 14443 A specifically, the position of the bit collision is written in two registers: partly in the Collision Position register (0x0E) and partly in the Collision Position and Interrupt Mask register (0x0D) (bits B6 and B7).

The collision position is presented as sequential bit number, where the count starts immediately after the start bit. This means a collision in the first bit of a UID would give the value 00 0001 0000 in these registers when their contents are combined after being read. (the count starts with 0 and the first 16 bits are the command code and the number of valid bits [NVB] byte).

The receive section also includes two timers. The RX wait time timer is controlled by the value in the RX Wait Time register (0x08). This timer defines the time interval after the end of the transmit operation in which the receive decoders are not active (held in reset state). This prevents false detections resulting from transients following the transmit operation. The value of the RX Wait Time register (0x08) defines the time in increments of 9.44 µs. This register is preset at every write to ISO Control register (0x01) according to the minimum tag response time defined by each standard.

The RX no response timer is controlled by the RX No Response Wait Time register (0x07). This timer measures the time from the start of slot in the anticollision sequence until the start of tag response. If there is no tag response in the defined time, an interrupt request is sent and a flag is set in the IRQ Status register (0x0C). This enables the external controller to be relieved of the task of detecting empty slots. The wait time is stored in the register in increments of 37.76 µs. This register is also automatically preset for every new protocol selection.

6.7.1 Received Signal Strength Indicator (RSSI)

The TRF7960A incorporates three independent RSSI building blocks: Internal Main RSSI, Internal Auxiliary RSSI, and External RSSI. The internal RSSI blocks are measuring the amplitude of the subcarrier signal, and the external RSSI block measures the amplitude of the RF carrier signal at the receiver input.

6.7.1.1 Internal RSSI – Main and Auxiliary Receivers

Each receiver path has its own RSSI block to measure the envelope of the demodulated RF signal (subcarrier). Internal Main RSSI and Internal Auxiliary RSSI are identical except that they are connected to different RF input pins. The Internal RSSI is intended for diagnostic purposes to set the correct RX path conditions.

The Internal RSSI values can be used to adjust the RX gain settings or decide which RX path (main or auxiliary) provides the greater amplitude and, hence, to decide if the MUX may need to be reprogrammed to swap the RX input signal. The measuring system latches the peak value, so the RSSI level can be read after the end of each receive packet. The RSSI register values are reset with every transmission (TX) by the reader. This guarantees an updated RSSI measurement for each new tag response.

The Internal RSSI has 7 steps (3 bit) with a typical increment of approximately 4 dB. The operating range is 600 mVpp to 4.2 Vpp with a typical step size of approximately 600 mV. Both RSSI values "Internal Main" and "Internal Aux" RSSI are stored in the RSSI Levels and Oscillator Status register (0x0F).

Figure 6-2 shows the nominal relationship between the input RF peak level and the RSSI value.

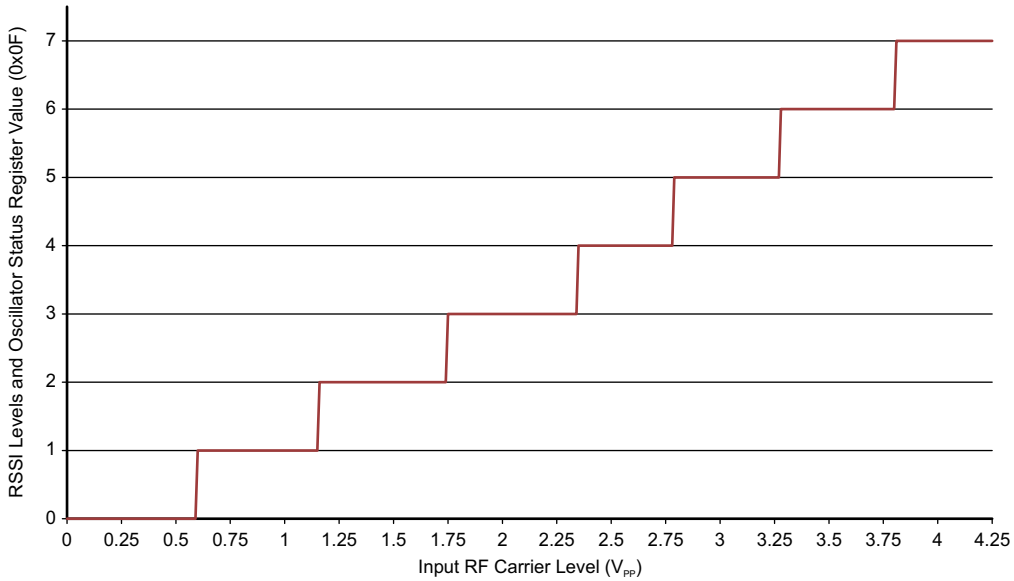

Figure 6-2. Digital Internal RSSI (Main and Auxiliary) Value vs RF Input Level

This RSSI measurement is done during the communication to the Tag; this means the TX must be on. Bit 1 in the Chip Status Control register (0x00) defines if internal RSSI or the external RSSI value is stored in the RSSI Levels and Oscillator Status register 0x0F. Direct command 0x18 is used to trigger an internal RSSI measurement.

6.7.1.2 External RSSI

The external RSSI is mainly used for test and diagnostic to sense the amplitude of any 13.56-MHz signal at the receiver's RX_IN1 input. The external RSSI measurement is typically done in active mode when the receiver is on but transmitter output is off. The level of the RF signal received at the antenna is measured and stored in the RSSI Levels and Oscillator Status register (0x0F).

Figure 6-3 shows the relationship between the voltage at the RX_IN1 input and the 3-bit code.

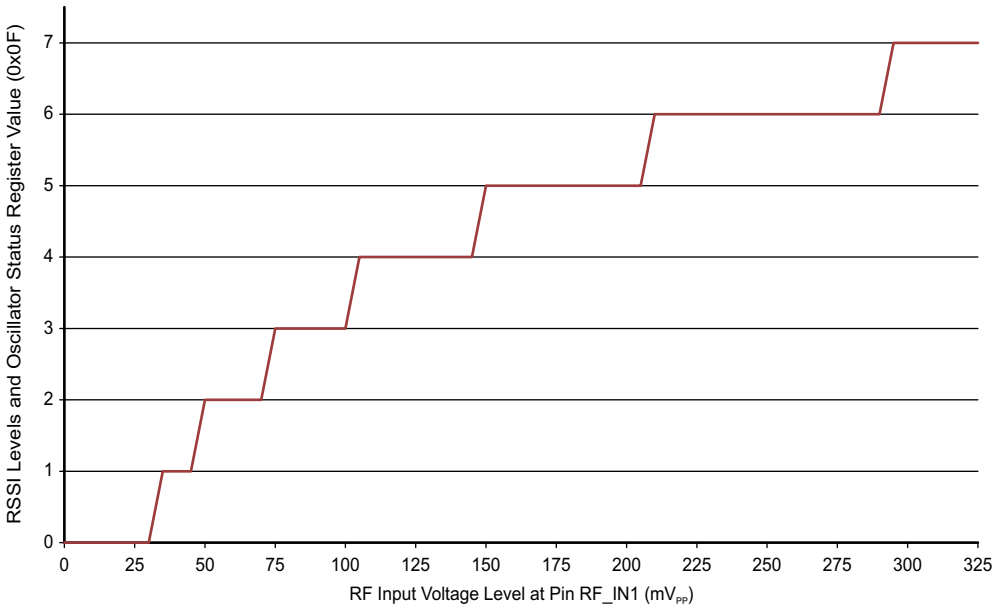

Figure 6-3. Digital External RSSI Value vs RF Input Level

Copyright © 2011–2020, Texas Instruments Incorporated

The relation between the 3-bit code and the external RF field strength (A/m) sensed by the antenna must be determined by calculation or by experiments for each antenna design. The antenna Q-factor and connection to the RF input influence the result. Direct command 0x19 is used to trigger an internal RSSI measurement.

To check the internal or external RSSI value independent of any other operation:

1. Set transmitter to desired state (on or off) using Bit 5 of the Chip Status Control register (0x00) and enable receiver using Bit 1.
2. Check internal or external RSSI using direct commands 0x18 or 0x19, respectively. This action places the RSSI value in the RSSI register.
3. Delay at least 50 µs.
4. Read the RSSI register using direct command 0x0F. Values can range from 0x40 to 0x7F.
5. Repeat steps 1 to 4 as desired; the register is reset after read.

6.8 Oscillator Section

The 13.56-MHz oscillator is controlled by the Chip Status Control register (0x00) and the EN and EN2 signals. The oscillator generates the RF frequency for the RF output stage and the clock source for the digital section. The buffered clock signal is available at pin 27 (SYS_CLK) for external circuits. B4 and B5 inside the Modulation and SYS_CLK register (0x09) can be used to divide the external SYS_CLK signal at pin 27 by 1, 2, or 4.

Typical start-up time from complete power down is in the range of 3.5 ms.

During Power Down Mode 2 (EN = 0, EN2 = 1) the frequency of SYS_CLK is switched to 60 kHz (typical).

The 13.56-MHz crystal must be connected between pin 30 and pin 31. The external shunt capacitors values for C_1 and C_2 must be calculated based on the specified load capacitance of the crystal being used. The external shunt capacitors are calculated as two identical capacitors in series plus the stray capacitance of the TRF7960A and parasitic PCB capacitance in parallel to the crystal.

The parasitic capacitance (C_S , stray and parasitic PCB capacitance) can be estimated at 4 to 5 pF (typical).

As an example, using a crystal with a required load capacitance (C_L) of 18 pF, the calculation is as follows (see Figure 6-4):

$$C_1 = C_2 = 2 \times (C_L - C_S) = 2 \times (18\ \text{pF} - 4.5\ \text{pF}) = 27\ \text{pF}$$

Place a 27-pF capacitor on pins 30 and 31 to ensure proper crystal oscillator operation.

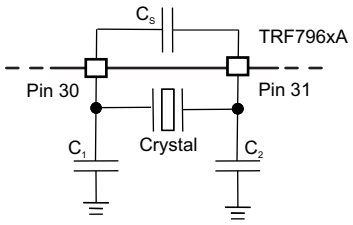

Figure 6-4. Crystal Block Diagram

Table 6-5 shows the minimum characteristics recommended for any crystal used with TRF7960A.

Table 6-5. Minimum Crystal Recommendations

PARAMETER	SPECIFICATION
Frequency	13.56 MHz
Mode of operation	Fundamental
Type of resonance	Parallel
Frequency tolerance	±20 ppm
Aging	<5 ppm/year
Operation temperature range	–40°C to 85°C

As an alternative, an external clock oscillator source can be connected to pin 31 to provide the system clock, and pin 30 can be left open.

6.9 Transmitter - Analog Section

The 13.56-MHz oscillator generates the RF signal for the PA stage. The power amplifier consists of a driver with selectable output resistance of 4 Ω or 8 Ω (typical). The transmit power levels are selectable between 100 mW (half power) or 200 mW (full power) when configured for 5-V automatic operation. Selection of the transmit power level is set by bit B4 in the Chip Status Control register (0x00). When configured for 3-V automatic operation, the transmit power level is typically in the range of 33 mW (half power) or 70 mW (full power).

The ASK modulation depth is controlled by bits B0, B1, and B2 in the Modulator and SYS_CLK Control register (0x09). The ASK modulation depth range can be adjusted from 7% to 30% or 100% (OOK).

External control of the transmit modulation depth is possible by setting the ISO Control register (0x01) to direct mode. While operating the TRF7960A in direct mode, the transmit modulation is made possible by selecting the modulation type ASK or OOK at pin 12. External control of the modulation type is made possible only if enabled by setting B6 in the Modulator and SYS_CLK Control register (0x09) to 1.

In normal operation mode, the length of the modulation pulse is defined by the protocol selected in the ISO Control register (0x01). In case of a high-Q antenna, the modulation pulse is typically prolonged, and the tag detects a longer pulse than intended. For such cases, the modulation pulse length must be corrected by using the TX Pulse Length register (0x06).

If the register contains all zeros, then the pulse length is governed by the protocol selection. If the register contains a value other than 0x00, the pulse length is equal to the value of the register multiplied by 73.7 ns. This means the pulse length can be adjusted from 73.7 ns to 18.8 µs in 73.7-ns increments.

6.10 Transmitter - Digital Section

The digital part of the transmitter is a mirror of the receiver. The settings controlled the ISO Control register (0x01) are applied to the transmitter just like the receiver. In the TRF7960A default mode (ISO Mode), the TRF7960A automatically adds all the special signals like start of communication, end of communication, SOF, EOF, parity bits and CRC bytes.

The data is then coded to modulation pulse levels and sent to the RF output stage modulation control unit. Just like with the receiver, this means that the external system MCU only must load the FIFO with data and all the microcoding is done automatically, again saving the firmware developer code space and time. Additionally, all the registers used for transmit parameter control are automatically preset to optimum values when a new selection is entered into the ISO Control register (0x01).

NOTE

The FIFO must be reset before starting any transmission with direct command 0x0F.

Copyright © 2011–2020, Texas Instruments Incorporated

There are two ways to start the transmit operation:

- Send the transmit command and the number of bytes to be transmitted first, and then start to send the data to the FIFO. The transmission starts when first data byte is written into the FIFO.
- Load the number of bytes to be sent into registers 0x1D and 0x1E and load the data to be sent into the FIFO (address 0x1F), followed by sending a transmit command (see Direct Commands section). The transmission then starts when the transmit command is received.

NOTE

If the data length is longer than the FIFO, the external system MCU is warned when the majority of data from the FIFO was already transmitted by sending and interrupt request with flag in IRQ register to indicate a FIFO low or high status. The external system should respond by loading next data packet into the FIFO.

At the end of a transmit operation, the external system MCU is notified by interrupt request (IRQ) with a flag in the IRQ register (0x0C) indicating TX is complete (example value = 0x80).

The TX Length registers also support incomplete byte transmission. The high two nibbles in register 0x1D and the nibble composed of bits B4 to B7 in register 0x1E store the number of complete bytes to be transmitted. Bit B0 in register 0x1E is a flag indicating that there are also additional bits to be transmitted which do not form a complete byte. The number of bits is stored in bits B1 to B3 of the same register (0x1E).

Some protocols have options so there are two sublevel configuration registers to select the TX protocol options.

- ISO14443B TX Options register (0x02). It controls the SOF and EOF selection and EGT selection for the ISO/IEC 14443 B protocol.
- ISO14443A High-Bit-Rate and Parity Options register (0x03). This register enables the use of different bit rates for RX and TX operations in ISO/IEC 14443 high-bit-rate protocol. Besides that, it also selects the parity method in case of ISO/IEC 14443 A high bit rate.

The digital section also has a timer. The timer can be used to start the transmit operation at a precise time in accordance with a selected event. This is necessary if the tag expects a replay in exact time window following the tag response. This is normally not the case with existing protocols but is needed in protocols when using 'fixed slot' command.

The TX timer uses two registers (register addresses 0x04 and 0x05). Register 0x04 uses 2 bits (B7 and B6) to define the trigger conditions. The remaining 6 bits of register 0x04 are the upper bits, and the 8 bits in register address 0x05 are the lower bits that preset the counter. The range of this counter is from 590 ns to 9.7 ms, in 590-ns increments.

6.11 Transmitter – External Power Amplifier or Subcarrier Detector

The TRF7960A can be used in conjunction with an external TX power amplifier or external subcarrier detector for the receiver path. If this is the case, Bit B6 of the Regulator and I/O Control register (0x0B) must be set to 1. This setting has two functions: First, to provide a modulated signal for the transmitter, if needed. Second, to configure the TRF7960A receiver inputs for an external demodulated subcarrier input. The design of an external power amplifier requires detailed RF knowledge. There are also readily designed and certified high-power HF reader modules on the market.

6.12 Communication Interface

6.12.1 General Introduction

The communication interface to the reader can be configured in two ways: with a eight line parallel interface (D0:D7) plus DATA_CLK, or with a 3- or 4-wire Serial Peripheral Interface (SPI). The SPI interface uses traditional master out/slave in (MOSI), master in/slave out (MISO), IRQ, and DATA_CLK lines. The SPI can be operated with or without using the slave select line.

These communication modes are mutually exclusive, which means that only one mode can be used at a time in the application.

When the SPI interface is selected, the unused I/O_2, I/O_1, and I/O_0 pins must be hard-wired according to Table 6-6. At power up, the TRF7960A IC samples the status of these three pins and then enters one of the possible SPI modes in Table 6-6.

samples the status of these three pins. If they are not the same (all high or all low), the IC enters one of the possible SPI modes.

The TRF7960A always behaves as the slave, while the microcontroller (MCU) behaves as the master device. The MCU initiates all communications with the TRF7960A. The TRF7960A makes use of the Interrupt Request (IRQ) pin in both parallel and SPI modes to prompt the MCU for servicing attention.

Table 6-6. Pin Assignment in Parallel and Serial Interface Connection or Direct Mode

PIN	PARALLEL	PARALLEL DIRECT	SPI WITH SS	SPI WITHOUT SS
DATA_CLK	DATA_CLK	DATA_CLK	DATA_CLK from master	DATA_CLK from master
I/O_7	A/D[7]		MOSI(1) = data in (reader in)	MOSI(1) = data in (reader in)
I/O_6	A/D[6]	Direct mode, data out (subcarrier or bit stream)	MISO(2) = data out (MCU out)	MISO(2) = data out (MCU out)
I/O_5 (3)	A/D[5]	Direct mode, strobe (bit clock out)	See (3)	See (3)
I/O_4	A/D[4]		SS (slave select)(4)	–
I/O_3	A/D[3]	–	–	–
I/O_2	A/D[2]	–	At VDD	At VDD
I/O_1	A/D[1]	–	At VDD	At VSS
I/O_0	A/D[0]	–	At VSS	At VSS
IRQ	IRQ interrupt	IRQ interrupt	IRQ interrupt	IRQ interrupt

(1) MOSI = Master out, slave in
(2) MISO = Master in, slave out
(3) The I/O_5 pin is used only for information when data is put out of the chip (for example, reading 1 byte from the chip). It is necessary first to write in the address of the register (8 clocks) and then to generate another 8 clocks for reading out the data. The I/O_5 pin goes high during the second 8 clocks. But for normal SPI operations I/O_5 pin is not used.
(4) The slave select pin is active low.

Communication is initialized by a start condition, which is expected to be followed by an Address/Command word (Adr/Cmd). The Adr/Cmd word is 8 bits long, and Table 6-7 describes its format.

Table 6-7. Address/Command Word Bit Distribution

BIT	DESCRIPTION	BIT FUNCTION	ADDRESS	COMMAND
B7	Command control bit	0 = Address 1 = Command	0	1
B6	Read/Write	1 = Read 0 = Write	R/W	0
B5	Continuous address mode	1 = Continuous mode	R/W	0
B4	Address/command bit 4		Adr 4	Cmd 4
B3	Address/command bit 3		Adr 3	Cmd 3
B2	Address/command bit 2		Adr 2	Cmd 2
B1	Address/command bit 1		Adr 1	Cmd 1
B0	Address/command bit 0		Adr 0	Cmd 0

Copyright © 2011–2020, Texas Instruments Incorporated

The MSB (bit 7) determines if the word is to be used as a command or as an address. The last two columns of Table 6-7 list the function of the separate bits if either address or command is written. Data is expected once the address word is sent. In continuous address mode (continuous mode = 1), the first data that follows the address is written (or read) to (from) the given address. For each additional data, the address is incremented by one. Continuous mode can be used to write to a block of control registers in a single stream without changing the address; for example, setup of the predefined standard control registers from the MCU nonvolatile memory to the reader. In noncontinuous address mode (simple addressed mode), only one data word is expected after the address.

Address Mode is used to write or read the configuration registers or the FIFO. When writing more than 12 bytes to the FIFO, the Continuous Address Mode should be set to 1.

The Command Mode is used to enter a command that results in reader action (for example, initialize transmission, enable reader, and turn reader on or off).

The following examples show the expected communications between an MCU and the TRF7960A.

Table 6-8 lists the format of a continuous address register read, and Figure 6-5 and Figure 6-6 show examples.

Table 6-8. Continuous Address Mode

Start	Adr x	Data(x)	Data(x+1)	Data(x+2)	Data(x+3)	Data(x+4)	...	Data(x+n)	StopCont

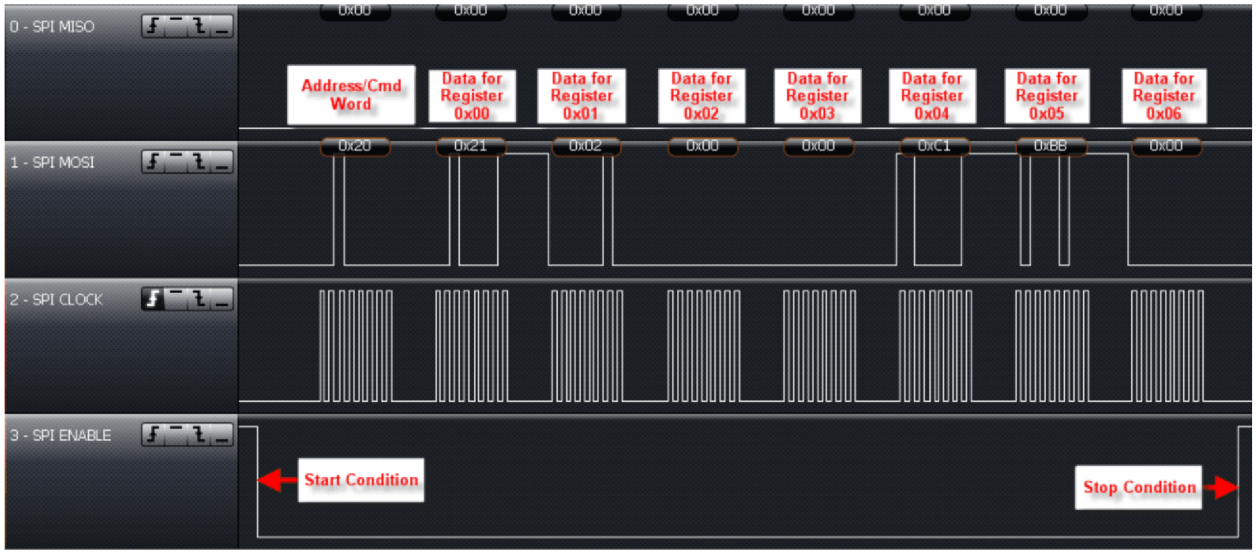

Figure 6-5. Continuous Address Register Write Example Starting With Register 0x00 (Using SPI With SS Mode)

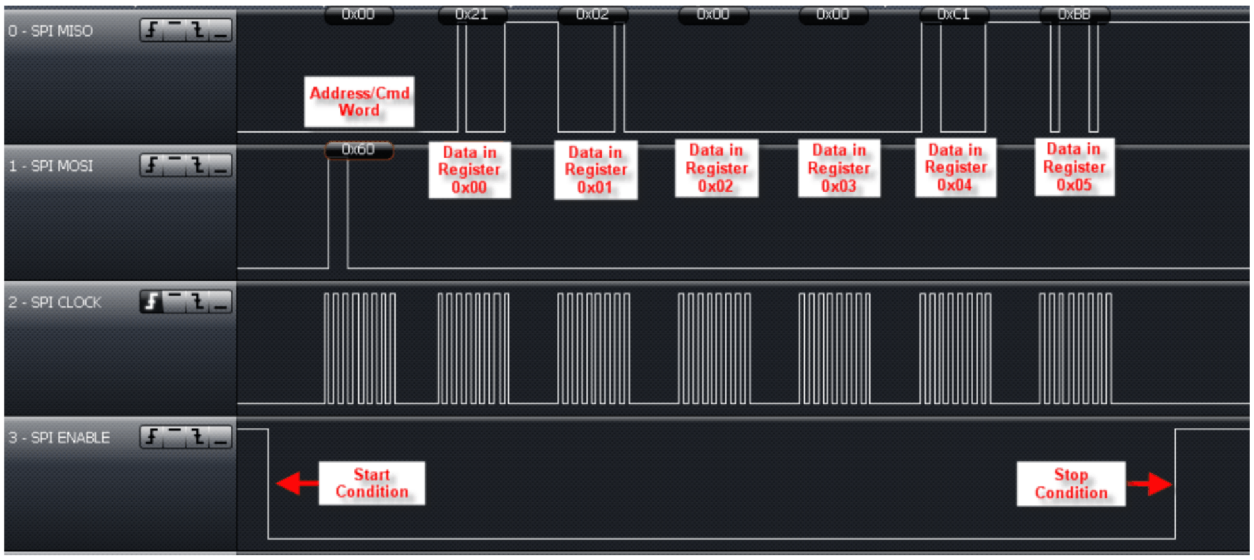

Figure 6-6. Continuous Address Register Read Example Starting With Register 0x00 (Using SPI With SS Mode)

Copyright © 2011–2020, Texas Instruments Incorporated

Table 6-9 lists the format of a single address register read, and Figure 6-7 and Figure 6-8 show examples.

Table 6-9. Noncontinuous Address Mode (Single Address Mode)

Start	Adr x	Data(x)	Adr y	Data(y)	...	Adr z	Data(z)	StopSgl

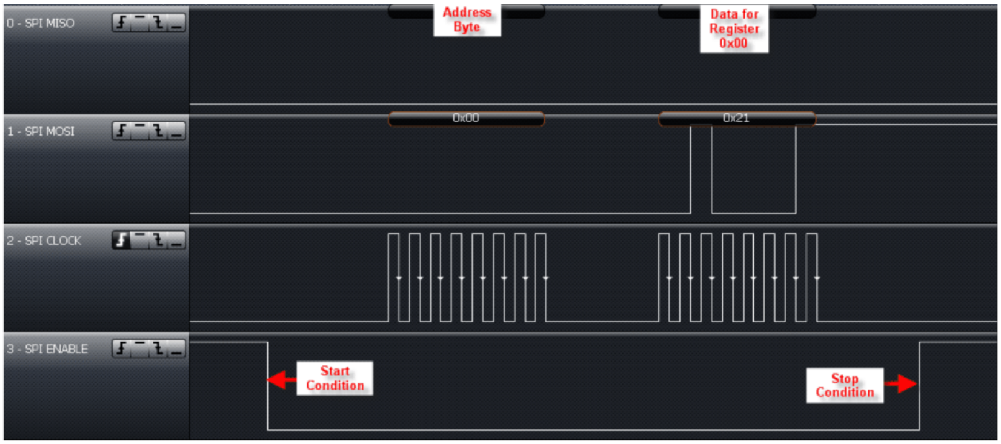

Figure 6-7. Single Address Register Write Example of Register 0x00 (Using SPI With SS Mode)

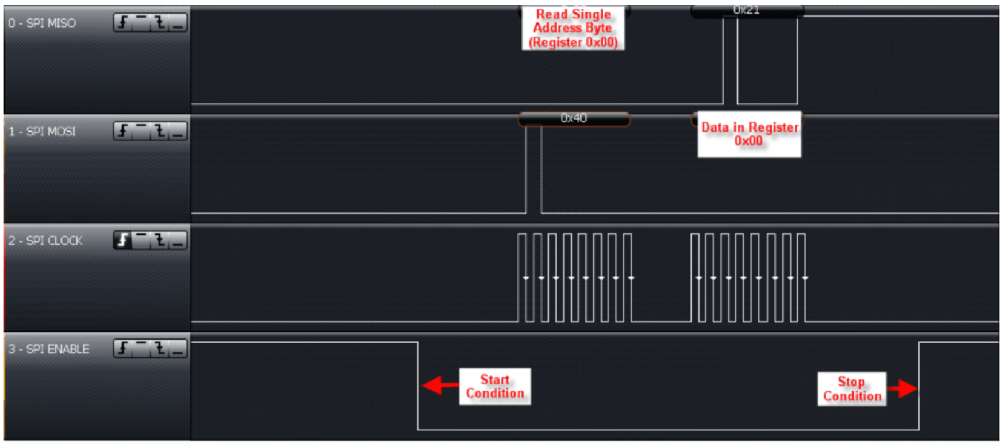

Figure 6-8. Single Address Register Read Example of Register 0x00 (Using SPI With SS Mode)

Table 6-10 lists the format of the direct command mode, and Figure 6-9 shows an example.

Table 6-10. Direct Command Mode

Start	Cmd x	(Optional data or command)	Stop

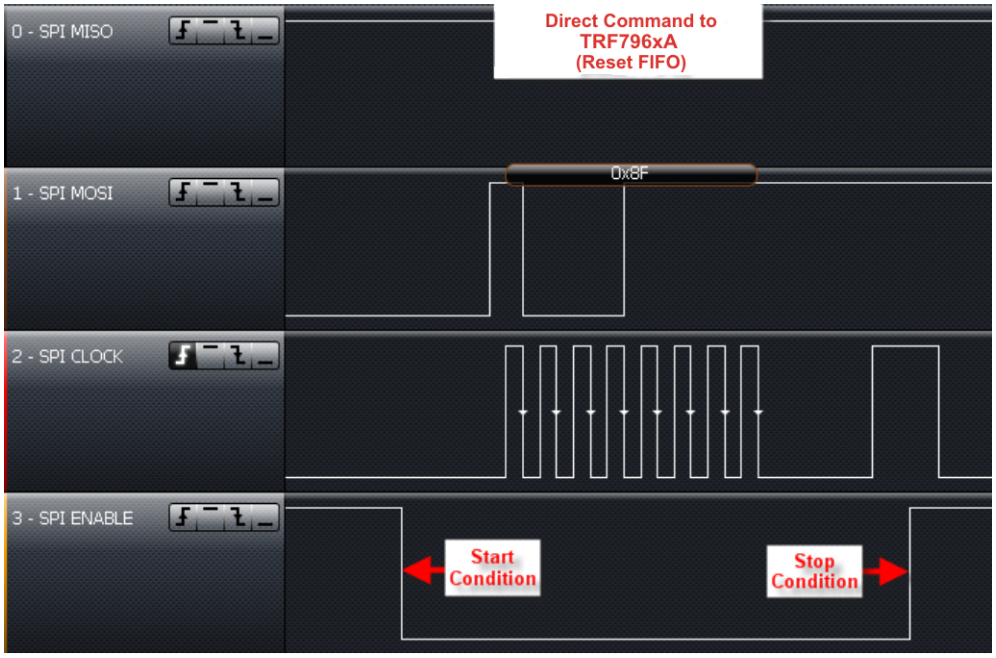

Figure 6-9. Direct Command Example of Sending 0x0F (Reset) (Using SPI With SS Mode)

The other Direct Command Codes from MCU to TRF7960A are described in Section 6.13.

6.12.2 FIFO Operation

The FIFO is a 12-byte register at address 0x1F with byte storage locations 0 to 11. FIFO data is loaded in a cyclical manner and can be cleared by a reset command (0x0F, see Figure 6-9 showing this Direct Command).

Associated with the FIFO are two counters and three FIFO status flags. The first counter is a 4-bit FIFO byte counter (bits B0 to B3 in register 0x1C) that keeps track of the number of bytes loaded into the FIFO. If the number of bytes in the FIFO is n, the register value is n – 1 (number of bytes in FIFO register). If 8 bytes are in the FIFO, the FIFO counter (bits B0 to B3 in register 0x1C) has the value 7.

A second counter (12 bits wide) indicates the number of bytes being transmitted (registers 0x1D and 0x1E) in a data frame. An extension to the transmission-byte counter is a 4-bit broken-byte counter also provided in register 0x1E (bits B0 to B3). Together these counters make up the TX length value that determines when the reader generates the EOF byte.

FIFO status flags are as follows:

1. **FIFO overflow** (bit B4 of register 0x1C): Indicates that the FIFO was loaded too soon
2. **FIFO level too low** (bit B5 of register 0x1C): Indicates that only three bytes are left to be transmitted (Can be used during transmission.)
3. **FIFO level high** (bit B6 of register 0x1C): Indicates that nine bytes are already loaded into the FIFO (Can be used during reception to generate a FIFO reception IRQ. This is to notify the MCU to service the reader in time to ensure a continuous data stream.)

Copyright © 2011–2020, Texas Instruments Incorporated

During transmission, the FIFO is checked for an almost-empty condition, and during reception for an almost-full condition. The maximum number of bytes that can be loaded into the FIFO in a single sequence is 12 bytes.

NOTE

The number of bytes in a frame, transmitted or received, can be greater than 12 bytes.

During transmission, the MCU loads the TRF7960A FIFO (or, during reception, the MCU removes data from the FIFO), and the FIFO counter counts the number of bytes being loaded into the FIFO. Meanwhile, the byte counter keeps track of the number of bytes being transmitted. An interrupt request is generated if the number of bytes in the FIFO is less than 3 or greater than 9, so that MCU can send new data or remove the data as necessary. The MCU also checks the number of data bytes to be sent, so as to not surpass the value defined in TX length bytes. The MCU also signals the transmit logic when the last byte of data is sent or was removed from the FIFO during reception. Transmission starts automatically after the first byte is written into FIFO.

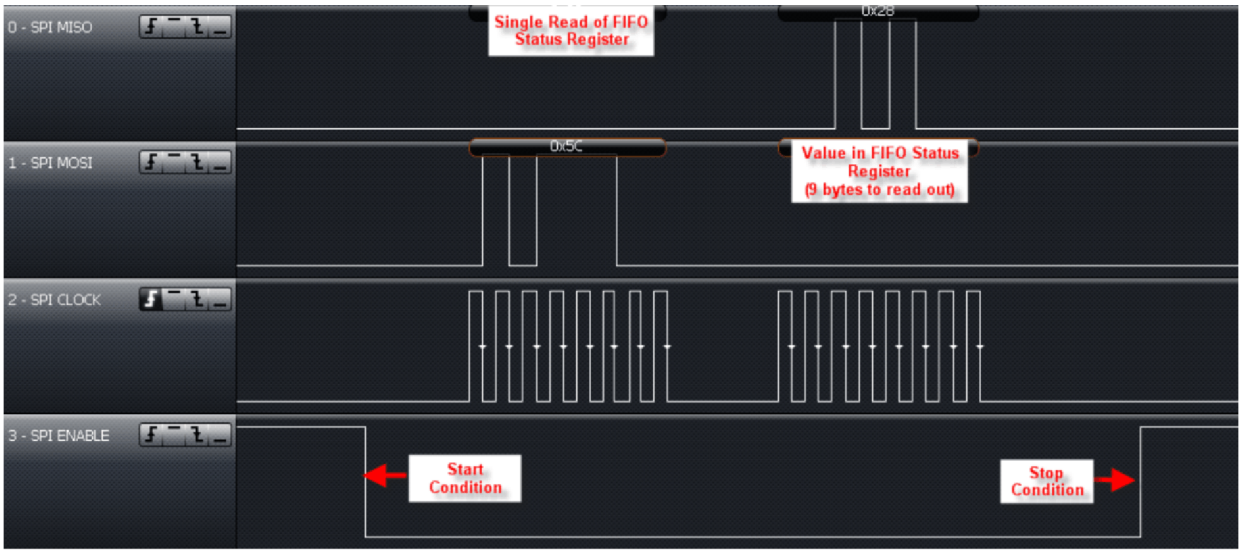

Figure 6-10. Checking the FIFO Status Register (Using SPI With SS Mode)

6.12.3 Parallel Interface Mode

In parallel mode, the start condition is generated on the rising edge of the I/O_7 pin while the CLK is high.

This is used to reset the interface logic. Figure 6-11, Figure 6-12, and Figure 6-13 show the sequence of the data, with an 8-bit address word first, followed by data.

Communication is ended by:

- The StopSmpl condition, where a falling edge on the I/O_7 pin is expected while CLK is high
- The StopCont condition, where the I/O_7 pin must have a successive rising and falling edge while CLK is low to reset the parallel interface and be ready for the new communication sequence
- The StopSmpl condition is also used to terminate the direct mode.

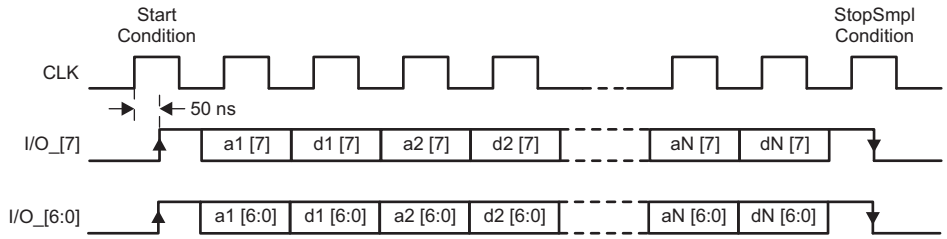

Figure 6-11. Parallel Interface Communication With Simple Stop Condition (StopSmpl)

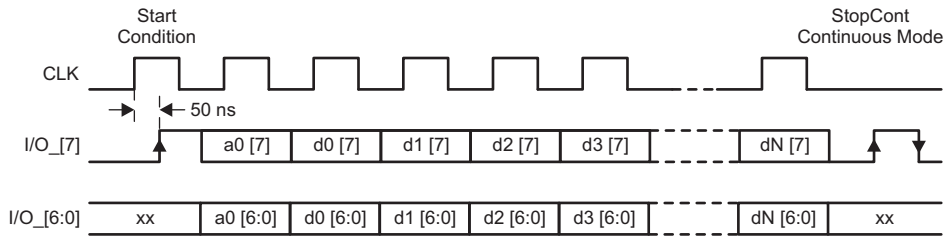

Figure 6-12. Parallel Interface Communication With Continuous Stop Condition (StopCont)

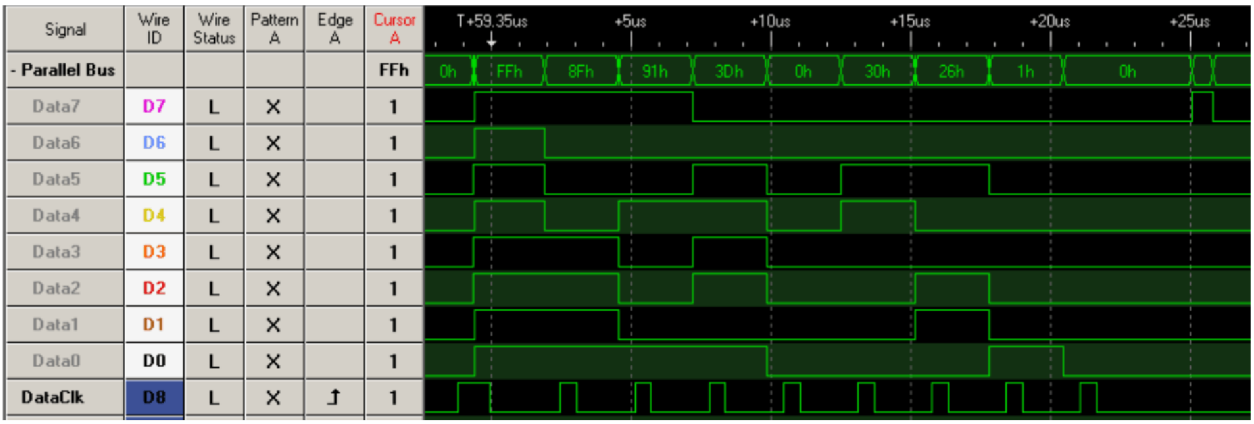

Figure 6-13. Parallel Interface Communication With Continuous Stop Condition

6.12.4 Reception of Air Interface Data

At the start of a receive operation (when SOF is successfully detected), B6 is set in the IRQ Status register. An interrupt request is sent to the MCU at the end of the receive operation if the receive data string was shorter than or equal to 8 bytes. The MCU receives the interrupt request, then checks to determine the reason for the interrupt by reading the IRQ Status register (address 0x0C), after which the MCU reads the data from the FIFO.

If the received packet is longer than 8 bytes, the interrupt is sent before the end of the receive operation when the ninth byte is loaded into the FIFO (75% full). The MCU must read the FIFO status register (0x1C) to determine the number of bytes to be read from the FIFO. Next, the MCU must read the data in the FIFO. It is optional but recommended to read the FIFO Status register (0x1C) after reading the FIFO data to determine if the receive is complete. In the case of an IRQ_FIFO, the MCU should expect either another IRQ_FIFO or RX complete interrupt. This is repeated until an RX complete interrupt is generated.

If the reader detects a receive error, the corresponding error flag is set (framing error, CRC error) in the IRQ Status register, indicating to the MCU that reception was not completed correctly.

Copyright © 2011–2020, Texas Instruments Incorporated

6.12.5 Data Transmission to MCU

Before beginning data transmission, the FIFO should always be cleared with a reset command (0x0F). Data transmission is initiated with a selected command (see Section 6.13). The MCU then commands the reader to do a continuous write command (0x3D) (see Table 6-7) starting from register 0x1D. Data written into register 0x1D is the TX length byte 1 (upper and middle nibbles), while the following byte in register 0x1E is the TX length byte 2 (lower nibble and broken byte length). The TX byte length determines when the reader sends the EOF byte. After the TX length bytes are written, FIFO data is loaded in register 0x1F with byte storage locations 0 to 11. Data transmission begins automatically after the first byte is written into the FIFO. The loading of TX length bytes and the FIFO can be done with a continuous write command, as the addresses are sequential.

At the start of transmission, the flag B7 (IRQ_TX) is set in the IRQ Status register. If the transmit data is shorter than or equal to 4 bytes, the interrupt is sent only at the end of the transmit operation. If the number of bytes to be transmitted is higher or equal to 5, then the interrupt is generated. This occurs also when the number of bytes in the FIFO reaches 3. The MCU should check the IRQ Status register and FIFO Status register and then load additional data to the FIFO, if needed. At the end of the transmit operation, an interrupt is sent to inform the MCU that the task is complete.

6.12.6 Serial Interface Communication (SPI)

When an SPI interface is used, I/O pins I/O_2, I/O_1, and I/O_0 must be hard-wired as specified in Table 6-6. On power up, the TRF7960A looks for the status of these pins; if they are not the same (not all high, or not all low), the reader enters into one of two possible SPI modes:

- SPI with slave select

  or
- SPI without slave select

The choice of one of these modes over the other should be made based on the available GPIOs and the desired control of the system.

The serial communications work in the same manner as the parallel communications with respect to the FIFO, except for the following condition. On receiving an IRQ from the reader, the MCU reads the TRF7960A IRQ Status register to determine how to service the reader. After this, the MCU must to do a dummy read to clear the reader's IRQ Status register. The dummy read is required in SPI mode, because the reader's IRQ Status register needs an additional clock cycle to clear the register. This is not required in parallel mode, because the additional clock cycle is included in the Stop condition.

A procedure for a dummy read is as follows:

1. Starting the dummy read
   1. When using slave select (SS): set SS bit low
   2. When not using SS: start condition is when SCLK is high
2. Send address word to IRQ Status register (0x0C) with read and continuous address mode bits set to 1
3. Read 1 byte (8 bits) from IRQ Status register (0x0C)
4. Dummy read 1 byte from register 0Dh (collision position and interrupt mask)
5. Stopping the dummy read
   1. When using slave select (SS): set SS bit high
   2. When not using SS: stop condition when SCLK is high

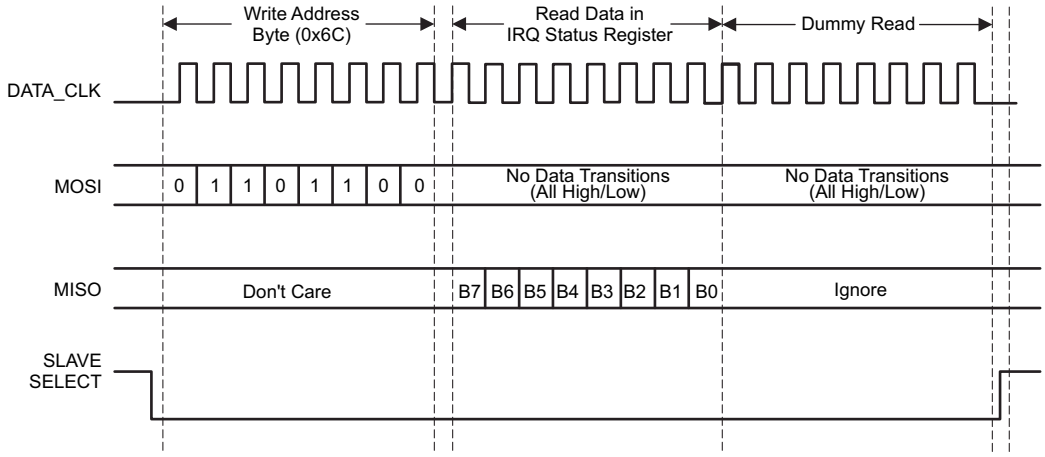

Figure 6-14. Procedure for Dummy Read

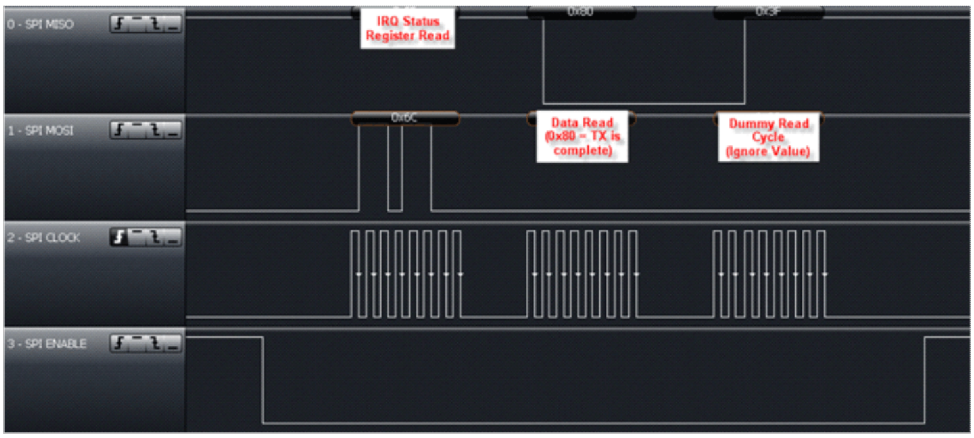

Figure 6-15. Dummy Read Using SPI With SS

6.12.6.1 Serial Interface Mode Without Slave Select (SS)

The serial interface without the slave select pin must use delimiters for the start and stop conditions. Between these delimiters, the address, data, and command words can be transferred. All words must be 8 bits long with MSB transmitted first (see Figure 6-16).

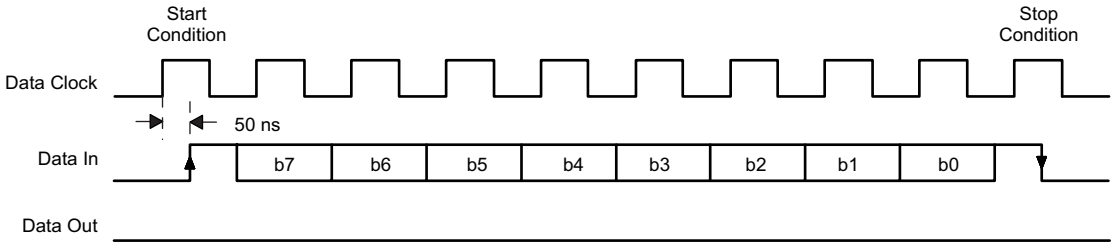

Figure 6-16. SPI Without Slave Select Timing

In this mode, a rising edge on data in (I/O_7, pin 24) while SCLK is high resets the serial interface and prepares it to receive data. Data in can change only when SCLK is low, and it is read by the reader on the SCLK rising edge. Communication is terminated by the stop condition when the data in falling edge occurs during a high SCLK period.

Copyright © 2011–2020, Texas Instruments Incorporated

6.12.6.2 Serial Interface Mode With Slave Select (SS)

The serial interface is in reset while the Slave Select signal is high. Serial data in (MOSI) changes on the falling edge and is validated in the reader on the rising edge (see Figure 6-17). Communication is terminated when the Slave Select signal goes high.

All words must be 8 bits long with the MSB transmitted first.

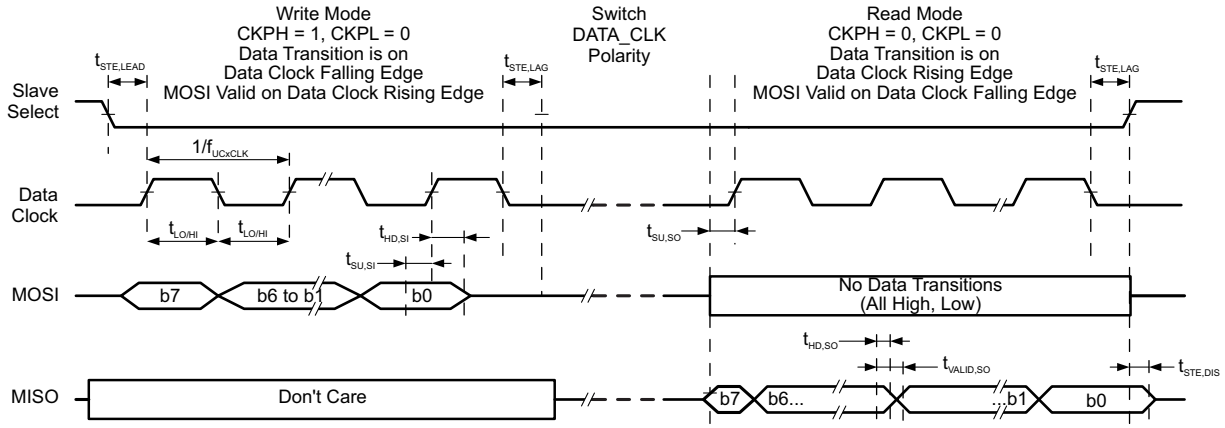

Figure 6-17. SPI With Slave Select Timing

The read command is sent out on the MOSI pin, MSB first, in the first eight clock cycles. MOSI data changes on the falling edge, and is validated in the reader on the rising edge, as shown in Figure 6-17. During the write cycle, the serial data out (MISO) is not valid. After the last read command bit (B0) is validated at the eighth rising edge of SCLK, after half a clock cycle, valid data can be read on the MISO pin at the falling edge of SCLK. It takes eight clock edges to read out the full byte (MSB first).

When using the hardware SPI (for example, an MSP430 hardware SPI) to implement this feature, care must be taken to switch the SCLK polarity after write phase for proper read operation. The example clock polarity for the Figure 6-17 shows the MSP430-specific environment in the write-mode and read-mode boxes. See the USART-SPI chapter for any specific microcontroller family for further information on the setting the appropriate clock polarity. This clock polarity switch must be done for all read (single or continuous) operations. The MOSI (serial data out) should not have any transitions (all high or all low) during the read cycle. The Slave Select should be low during the whole write and read operation.

See Section 5.6, *Switching Characteristics*, for the timing values shown in Figure 6-17.

Figure 6-18 shows the continuous read operation.

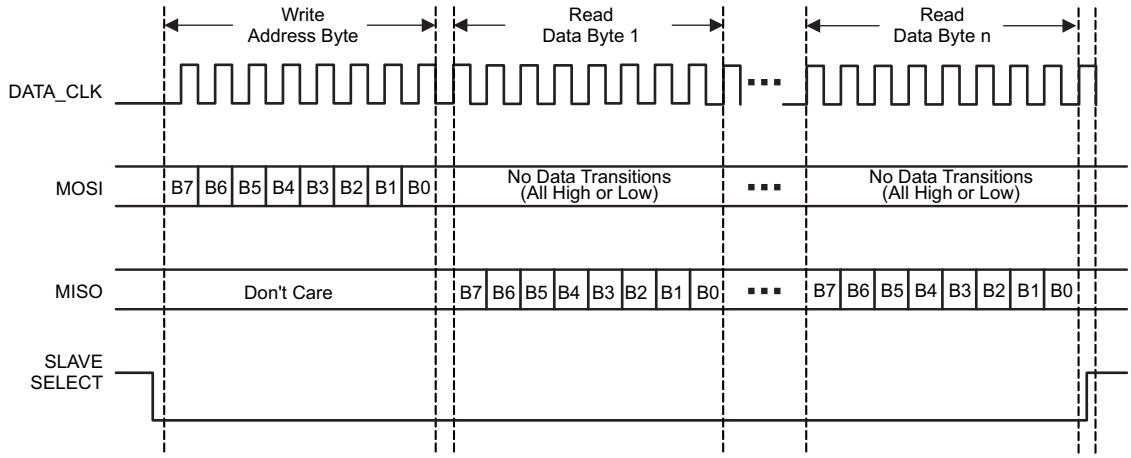

Figure 6-18. Continuous Read Operation Using SPI With Slave Select

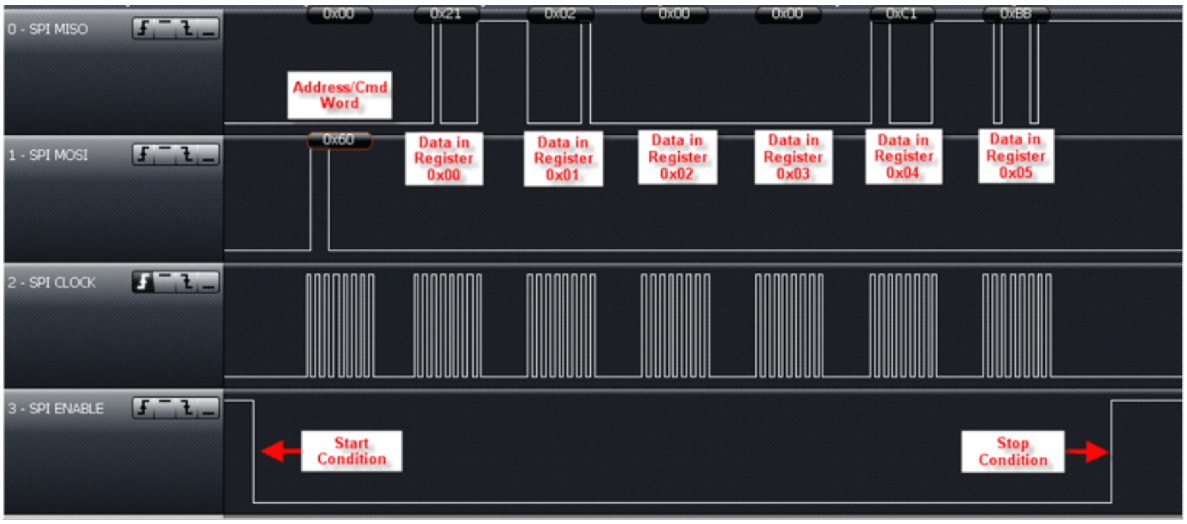

Figure 6-19. Continuous Read of Registers 0x00 to 0x05 Using SPI With SS

Figure 6-20 shows performing a Single Slot Inventory Command as an example. Reader registers (in this example) are configured for 5-VDC input and default operation. Full sequences for other settings and protocols can be downloaded from http://www.ti.com/lit/zip/sloc240.

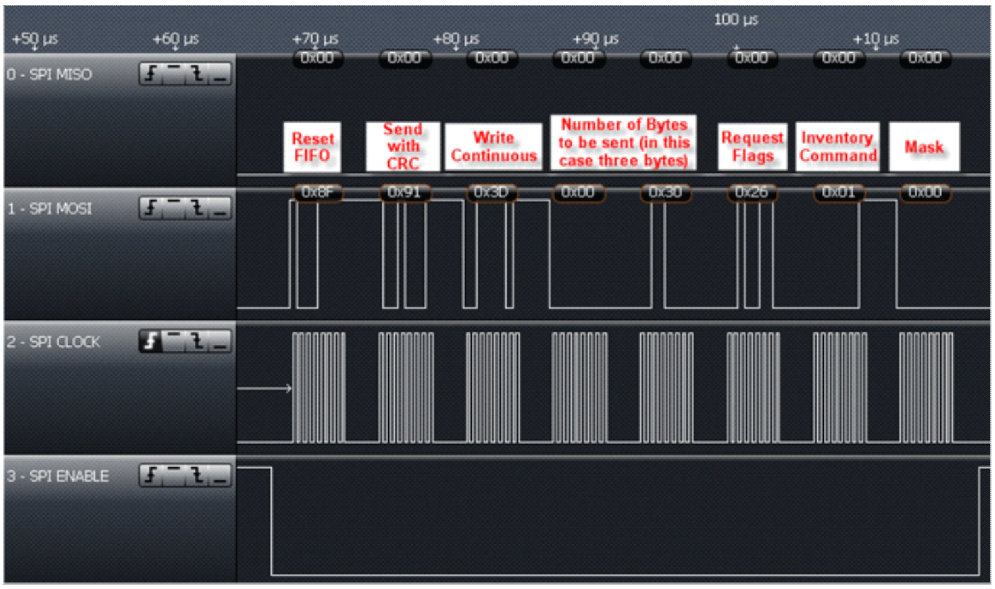

Figure 6-20. Inventory Command Sent From MCU to TRF7960A

The TRF7960A reads these bytes from the MCU and then sends out Request Flags, Inventory Command, and Mask over the air to the ISO/IEC 15693 transponder. After these three bytes have been transmitted, an interrupt occurs from the reader to indicate back to the MCU that the transmission has been completed. In the example shown in Figure 6-21, this IRQ occurs approximately 1.6 ms after the SS line goes high after the Inventory command is sent out.

Copyright © 2011–2020, Texas Instruments Incorporated

Figure 6-21. IRQ After Inventory Command

The IRQ Status register read (0x6C) yields 0x80, which indicates that TX is complete. This is followed by dummy clock and reset of FIFO with dummy clock. Then, if a tag is in the field and no error is detected by the reader, a second interrupt is expected and occurs (in this example) approximately 4 ms after first IRQ is read and cleared.

In the continuation of the example (see Figure 6-22), the IRQ Status register is read using method previously recommended, followed by a single read of the FIFO Status register, which indicates that there are at least 9 bytes to be read out.

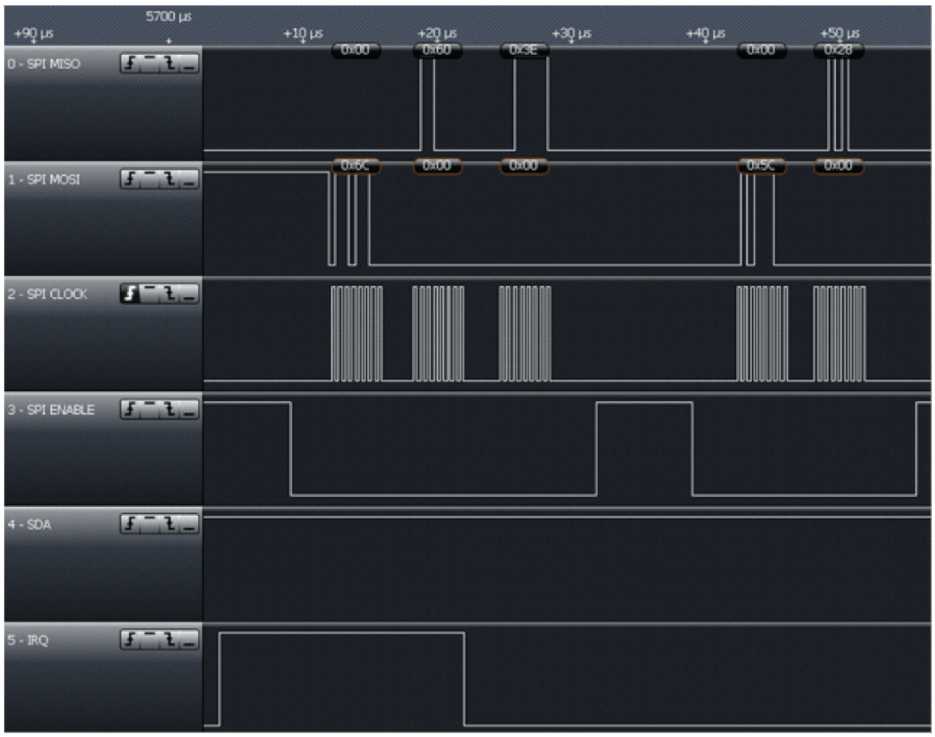

Figure 6-22. IRQ Status Register Read Followed by FIFO Status Register Read

This is followed by a continuous read of the FIFO (see Figure 6-23). The first byte is 0x00 for no error. The next byte is the DSFID (usually shipped by manufacturer as 0x00), then the UID, shown here up to the next most significant byte (MSByte), the MFG code (0x07 to indicate TI silicon).

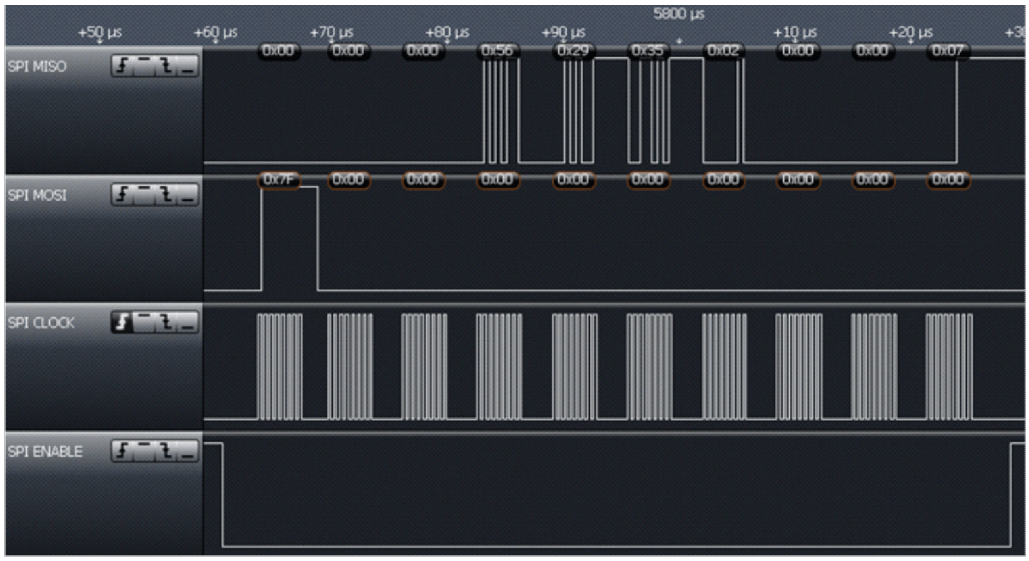

Figure 6-23. Continuous Read of FIFO

This is followed by another IRQ approximately 160 µs later, as there is still one byte in FIFO, the MSB of the UID, which must be retrieved (see Figure 6-24). IRQ register read shows RX is complete and FIFO register status shows one byte available, as expected and it is the E0, indicating ISO/IEC 15693 transponder.

Copyright © 2011–2020, Texas Instruments Incorporated

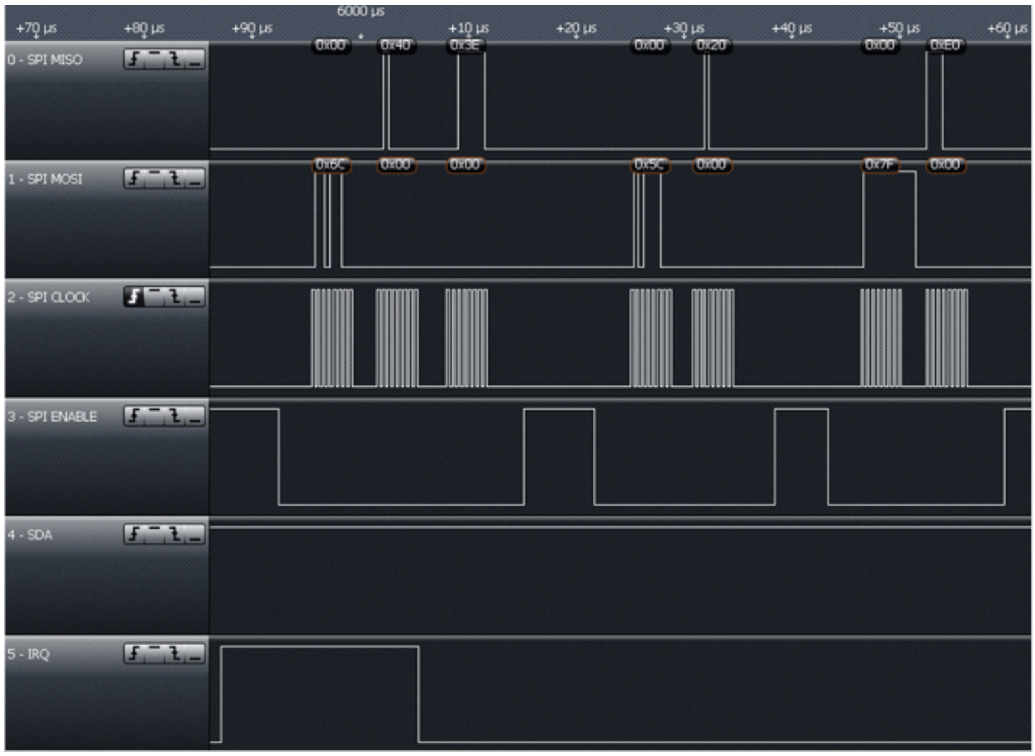

Figure 6-24. IRQ With One Byte in FIFO

TI recommends resetting the FIFO after receiving data. Additionally, the RSSI value of the tag can be read out at this time. In the example in Figure 6-25, the transponder is very close to the antenna, so a value of 0x7E is recovered.

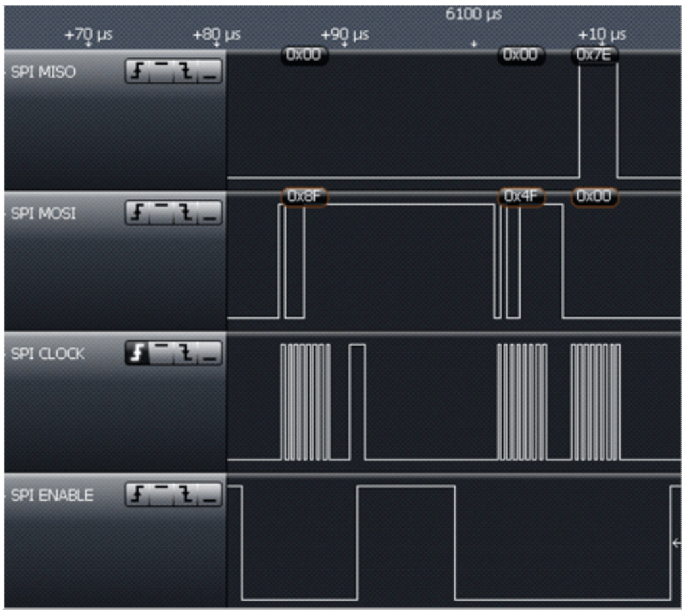

Figure 6-25. Reset FIFO and Read RSSI

6.12.7 Direct Mode

Direct mode lets the reader be configured in one of two ways:

Direct mode 0 (bit 6 = 0, as defined in ISO Control register) lets the application use only the front-end functions of the reader, bypassing the protocol implementation in the reader. For transmit functions, the application has direct access to the transmit modulator through the MOD pin (pin 14). On the receive side, the application has direct access to the subcarrier signal (digitized RF envelope signal) on I/O_6 (pin 23).

Direct mode 1 (bit 6 = 1, as defined in ISO Control register) uses the subcarrier signal decoder of the selected protocol (as defined in ISO Control register). This means that the receive output is not the subcarrier signal but the decoded serial bit stream and bit clock signals. The serial data is available on I/O_6 (pin 23), and the bit clock is available on I/O_5 (pin 22). The transmit side is identical; the application has direct control over the RF modulation through the MOD input. This mode is provided so that the application can implement a protocol that has the same bit coding as one of the protocols implemented in the reader, but needs a different framing format.

To select direct mode, first choose which direct mode to enter by writing B6 in the ISO Control register. This bit determines if the receive output is the direct subcarrier signal (B6 = 0) or the serial data of the selected decoder. If B6 = 1, then the application must also define which protocol should be used for bit decoding by writing the appropriate setting in the ISO Control register.

The reader actually enters the direct mode when B6 (direct) is set to 1 in the Chip Status Control register. Direct mode starts immediately. The write command should not be terminated with a stop condition (see communication protocol), because the stop condition terminates the direct mode and clears B6. This is necessary as the direct mode uses one or two I/O pins (I/O_6 and I/O_5). Normal parallel communication is not possible in direct mode. Sending a stop condition terminates direct mode.

Figure 6-26 shows the different configurations available in direct mode.

- In mode 0, the reader is used as an AFE only, and protocol handling is bypassed.
- In mode 1, framing is not done, but SOF and EOF are present. This allows for a user-selectable framing level based on an existing ISO standard.
- In mode 2, data is ISO standard formatted. SOF, EOF, and error checking are removed, so the microprocessor receives only bytes of raw data through a 12-byte FIFO.

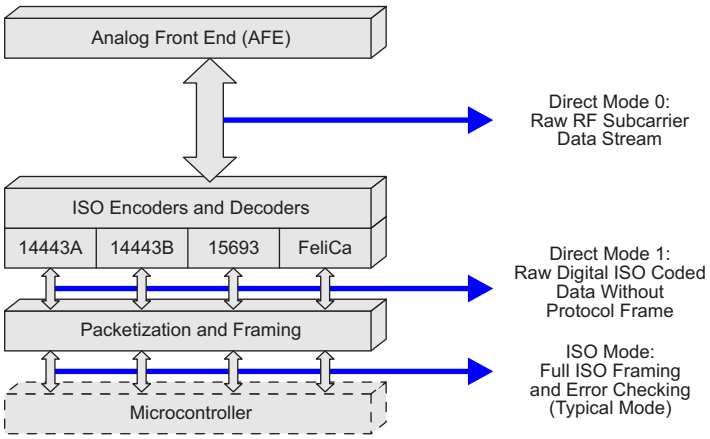

Figure 6-26. User-Configurable Modes

Copyright © 2011–2020, Texas Instruments Incorporated

The steps to enter direct mode follow, using SPI with SS communication method only as one example, as direct modes are also possible with parallel and SPI without SS. The application must enter direct mode 0 to accommodate non-ISO standard compliant card type communications. direct mode can be entered at any time, so that if a card type started with ISO standard communications, then deviated from the standard after being identified and selected, the ability to go into direct mode 0 becomes very useful.

Step 1: Configure pins I/O_0 to I/O_2 for SPI with SS

Step 2: Set pin 12 of the TRF7960A (ASK/OOK pin) to 0 for ASK or 1 for OOK

Step 3: Program the TRF7960A registers

The following registers must be explicitly set before going into direct mode.

1. ISO Control register (0x01) to the appropriate standard:
   - 0x02 for ISO/IEC 15693 high data rate (26.48 kbps)
   - 0x08 for ISO/IEC 14443 A (106 kbps)
   - 0x1A for FeliCa 212 kbps
   - 0x1B for FeliCa 424 kbps
2. Modulator and SYS_CLK Register (0x09) to the appropriate clock speed and modulation:
   - 0x21 for 6.78-MHz clock and OOK (100%) modulation
   - 0x20 for 6.78-MHz clock and ASK 10% modulation
   - 0x22 for 6.78-MHz clock and ASK 7% modulation
   - 0x23 for 6.78-MHz clock and ASK 8.5% modulation
   - 0x24 for 6.78-MHz clock and ASK 13% modulation
   - 0x25 for 6.78-MHz clock and ASK 16% modulation

   See register 0x09 definition for all other possible values.

   Example register setting for ISO/IEC 14443 A at 106 kbps:
   - ISO Control register (0x01) to 0x08
   - RX No Response Wait Time register (0x07) to 0x0E
   - RX Wait Time register (0x08) to 0x07
   - Modulator Control register (0x09) to 0x21 (or any custom modulation)
   - RX Special Settings register (0x0A) to 0x20

Step 4: Enter direct mode

The following registers must be reprogrammed to enter direct mode:

1. Set bit B6 of the Modulator and SYS_CLK Control register (0x09) to 1.
2. Set bit B6 of the ISO Control register (0x01) to 0 for direct mode 0 (default its 0)
3. Set bit B6 of the Chip Status Control register (0x00) to 1 to enter direct mode (do not send a Stop condition after this command)

NOTE

- Do not terminate last write with a Stop condition. For SPI, this means that Slave Select (I/O_4) continues to stay low.
- Sending a Stop condition terminates the direct mode and clears bit B6 in the Chip Status Control register (0x00).

NOTE

Access to registers, FIFO, and IRQ is not available during direct mode 0.

Remember that the reader enters direct mode 0 when bit 6 of the Chip Status Control register (0x00) is set to a 1, and it stays in direct mode 0 until a Stop condition is sent from the microcontroller.

NOTE

The write command should not be terminated with a Stop condition (for example, in SPI mode this is done by bringing the SS line high after the register write), because the Stop condition terminates the direct mode and clears bit 6 of the Chip Status Control register (0x00), making it a 0.

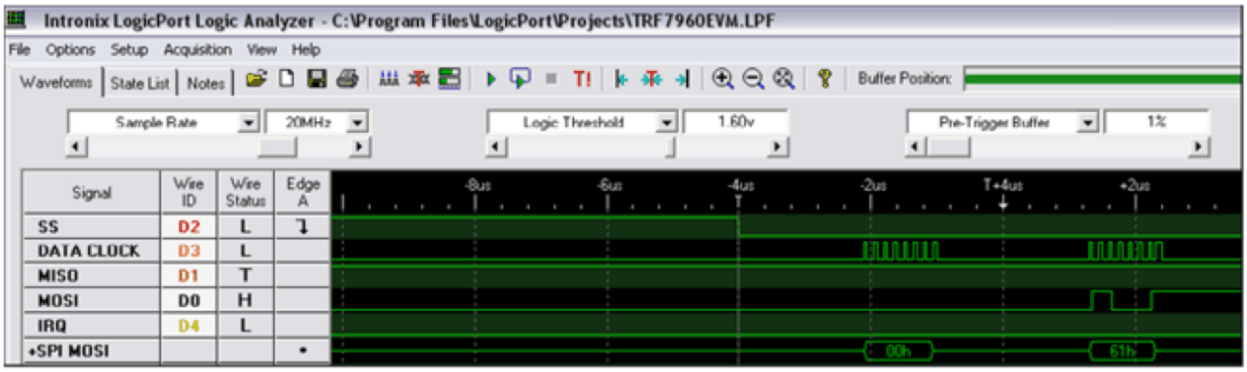

Figure 6-27. Entering Direct Mode 0

Step 5: Transmit data using direct mode

The user now has direct control over the RF modulation through the MOD input.

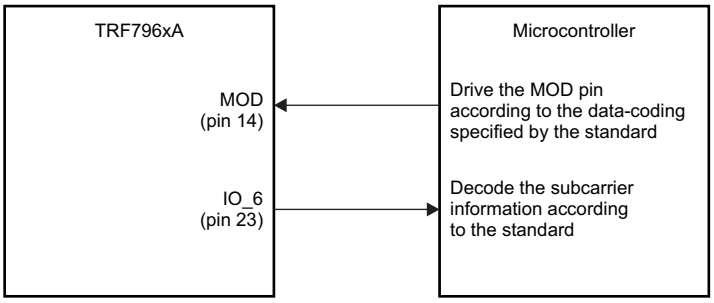

Figure 6-28. Control of RF Modulation Using MOD

The microcontroller is responsible for generating data according to the coding specified by the particular standard. The microcontroller must generate SOF, EOF, data, and CRC. In direct mode, the FIFO is not used and no IRQs are generated. See the applicable ISO standard to understand bit and frame definitions.

Step 6: Receive data using direct mode

After the TX operation is complete, the tag responds to the request and the subcarrier data is available on pin I/O_6. The microcontroller must decode the subcarrier signal according to the standard. This includes decoding the SOF, data bits, CRC, and EOF. The CRC then must be checked to verify data integrity. The receive data bytes must be buffered locally.

Figure 6-29 shows an example of the receive data bits and framing level according to the ISO/IEC 14443 A standard (sourced from the ISO/IEC 14443 specification and TRF7960A air interface).

Copyright © 2011–2020, Texas Instruments Incorporated

128/fc = 9.435 µs = t_b (106-kbps data rate)
64/fc = 4.719 µs = t_x time
32/fc = 2.359 µs = t_1 time

Table 7 — Parameters for sequences

Parameter	Bit rate			
	fc/128	fc/64	fc/32	fc/16
t_b	128/fc	64/fc	32/fc	16/fc
t_x	64/fc	32/fc	16/fc	8/fc
t_1	see t_1 of Table 3	see t_1 of Table 5		

The above sequences shall be used to code the following information:

— logic "1": sequence X,

— logic "0": sequence Y with the following two exceptions:

i) If there are two or more contiguous "0"s, sequence Z shall be used from the second "0" on,

ii) If the first bit after a "start of frame" is "0", sequence Z shall be used to represent this and any "0"s which follow directly thereafter.

— start of communication: sequence Z,

— end of communication: logic "0" followed by sequence Y,

— no information: at least two sequences Y.

Figure 10 together with the timing parameters in Table 7 illustrate sequences X, Y and Z.

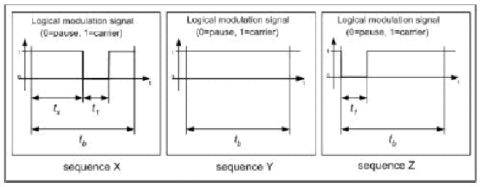

Figure 10 — Sequences for Type A communication PCD to PICC

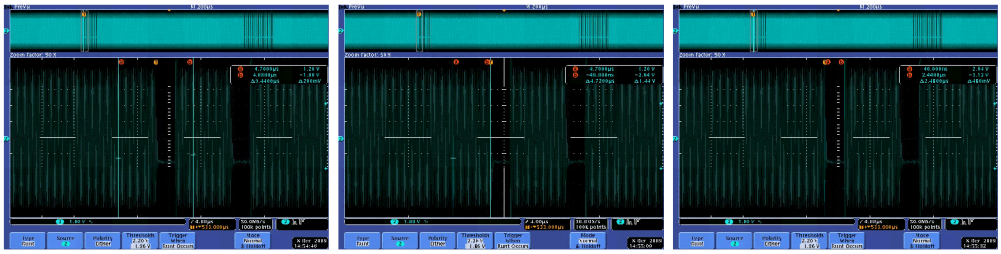

t_b = 9.44 µs t_x = 4.72 µs t_1 = 2.48 µs

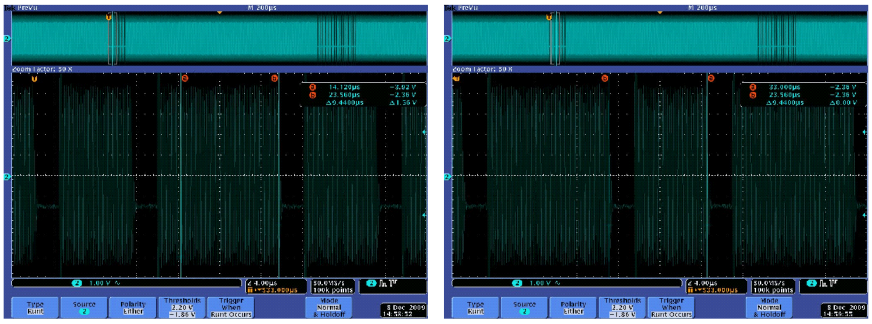

Sequence Y = Carrier for 9.44 µs

Sequence Z = Pause for 2 to 3 µs, Carrier for Remainder of 9.44 µs

Figure 6-29. Receive Data Bits and Framing Level (ISO/IEC 14443 A)

Step 7: Exit direct mode 0

When an EOF is received, data transmission is over, and direct mode 0 can be terminated by sending a Stop condition (the SS signal goes high). The TRF7960A returns to ISO Mode (normal mode).

6.13 Direct Commands from MCU to Reader

6.13.1 Command Codes

Table 6-11 lists the valid commands that the MCU can send to the reader.

Table 6-11. Command Codes

COMMAND CODE	COMMAND	COMMENTS
0x00	Idle	
0x03	Software Initialization	Same as power-on reset
0x0F	Reset FIFO	
0x10	Transmission Without CRC	
0x11	Transmission With CRC	
0x12	Delayed Transmission Without CRC	
0x13	Delayed Transmission With CRC	
0x14	End of Frame/Transmit Next Time Slot	Used for ISO/IEC 15693 only
0x16	Block Receiver	
0x17	Enable Receiver	
0x18	Test Internal RF	RSSI at RX input with TX off
0x19	Test External RF	RSSI at RX input with TX off
0x1A	Receiver Gain Adjust	

The command code values from Table 6-11 are substituted in Table 6-12, Bits 0 to 4. Also, the most significant bit (MSB) in Table 6-12 must be set to 1.

Table 6-12. Address/Command Word Bit Distribution

BIT	DESCRIPTION	BIT FUNCTION	ADDRESS	COMMAND
B7	Command control bit	0 = Address 1 = Command	0	1
B6	Read/Write	0 = Write 1 = Read	R/W	0
B5	Continuous address mode		Continuous mode	Not used
B4	Address/Command bit 4		Adr 4	Cmd 4
B3	Address/Command bit 3		Adr 3	Cmd 3
B2	Address/Command bit 2		Adr 2	Cmd 2
B1	Address/Command bit 1		Adr 1	Cmd 1
B0	Address/Command bit 0		Adr 0	Cmd 0

The MSB determines if the word is to be used as a command or address. The last two columns of Table 6-12 show the function of separate bits depending on whether address or command is written. Command mode is used to enter a command resulting in reader action (for example, initialize transmission, enable reader, or turn the reader on or off).

6.13.2 Reset FIFO (0x0F)

The reset command clears the FIFO contents and FIFO Status register (0x1C). It also clears the register storing the collision error location (0x0E).

Copyright © 2011–2020, Texas Instruments Incorporated

6.13.3 Transmission With CRC (0x11)

The transmission command must be sent first, followed by transmission length bytes, and FIFO data. The reader starts transmitting after the first byte is loaded into the FIFO. The CRC byte is included in the transmitted sequence.

6.13.4 Transmission Without CRC (0x10)

The transmission command must be sent first, followed by transmission length bytes, and FIFO data. The reader starts transmitting after the first byte is loaded into the FIFO. This is the same as described in Section 6.13.3, except that the CRC is not included.

6.13.5 Delayed Transmission With CRC (0x13)

The transmission command must be sent first, followed by the transmission length bytes, and FIFO data. The reader transmission is triggered by the TX timer.

6.13.6 Delayed Transmission Without CRC (0x12)

The transmission command must be sent first, followed by the transmission length bytes, and FIFO data. The reader transmission is triggered by the TX timer. This is the same as described in Section 6.13.5, except that the CRC is not included.

6.13.7 Transmit Next Time Slot (0x14)

When this command is received, the reader transmits the next slot command. The next slot sign is defined by the protocol selection. This command is used by the ISO/IEC 15693 protocol.

6.13.8 Block Receiver (0x16)

The block receiver command puts the digital part of receiver (bit decoder and framer) in reset mode. This is useful in an extremely noisy environment, where the noise level could otherwise cause a constant switching of the subcarrier input of the digital part of the receiver. The receiver (if not in reset) would try to catch a SOF signal, and if the noise pattern matched the SOF pattern, an interrupt would be generated, falsely signaling the start of an receive operation. A constant flow of interrupt requests can be a problem for the external system (MCU), so the external system can stop this by putting the receive decoders in reset mode.

The reset mode can be terminated in two ways:

The external system can send the enable receiver command (see Section 6.13.9).

The reset mode is automatically terminated at the end of a transmit operation.

The receiver can stay in reset after end of transmit if the RX Wait Time register (0x08) is set. In this case, the receiver is enabled at the end of the wait time following the transmit operation.

6.13.9 Enable Receiver (0x17)

This command clears the reset mode in the digital part of the receiver if the reset mode was entered by the block receiver command.

6.13.10 Test Internal RF (RSSI at RX Input With TX On) (0x18)

The level of the RF carrier at RF_IN1 and RF_IN2 inputs is measured. THe operating range is 300 mV_P to 2.1 V_P (the step size is 300 mV). The two values are reported in the RSSI Levels register (0x0F). The command is intended for diagnostic purposes to set correct RF_IN levels. Optimum RFIN input level is approximately 1.6 V_P or code 5 to 6. The nominal relationship between the RF peak level and RSSI code is described in Table 6-13 and in Section 6.7.1.1.

NOTE

If the command is executed immediately after power-up and before any communication with tag was performed, the command must be preceded by the Enable RX command. The Check RF commands require full operation, so the receiver must be activated by enable receive or by a normal tag communication for the Check RF command to work properly.

Table 6-13. Test Internal RF

RF_IN1 (mV_P):	300	600	900	1200	1500	1800	2100
Decimal Code:	1	2	3	4	5	6	7
Binary Code:	001	010	011	001	101	011	111

6.13.11 Test External RF (RSSI at RX Input With TX Off) (0x19)

This command can be used in active mode when the RF receiver is on but RF output is off. This means bit B1 = 1 in the Chip Status Control register. The level of RF signal received on the antenna is measured and reported in the RSSI Levels register (0x0F). The relation between the 3-bit code and the external RF field strength [A/m] must be determinate by calculation or by experiments for each antenna type, because the antenna Q and connection to the RF input influence the result. Table 6-14 and Section 6.7.1.2 describe the nominal relation between the RF peak-to-peak voltage in the RF_IN1 input and RSSI code, respectively.

NOTE

If the command is executed immediately after power-up and before any communication with tag was performed, the command must be preceded by the Enable RX command. The Check RF commands require full operation, so the receiver must be activated by enable RX or by a normal tag communication for the Check RF command to work properly.

Table 6-14. Test External RF

RF_IN1 (mV_P):	40	60	80	100	140	180	300
Decimal Code:	1	2	3	4	5	6	7
Binary Code:	001	010	011	001	101	011	111

6.13.12 Register Preset

After power-up and the EN pin low-to-high transition, the reader is in the default mode. The default configuration is ISO/IEC 15693, single subcarrier, high data rate, 1-out-of-4 operation. The low-level option registers (0x02 to 0x0B) are automatically set to adapt the circuitry optimally to the appropriate protocol parameters. When entering another protocol (by writing to the ISO Control register), the low-level option registers are automatically configured to the new protocol parameters. After selecting the protocol, it is possible to change some low-level register contents if needed. However, changing to another protocol and then back reloads the default settings; therefore, the custom settings must be reloaded.

The Clo0 and Clo1 bits in the Modulator and SYS_CLK Control register (0x09), which define the microcontroller frequency available on the SYS_CLK pin, are the only 2 bits in the configuration registers that are not cleared during protocol selection.

Copyright © 2011–2020, Texas Instruments Incorporated

6.14 Register Description

6.14.1 Register Overview

Table 6-15 lists the registers available in the TRF7960A. These registers are described in the following sections.

Table 6-15. Register Overview

ADDRESS (hex)	REGISTER	READ/WRITE	SECTION
Main Control Registers			
0x00	Chip Status Control	R/W	Section 6.14.1.1.1
0x01	ISO Control	R/W	Section 6.14.1.1.2
Protocol Subsetting Registers			
0x02	ISO14443B TX Options	R/W	Section 6.14.1.2.1
0x03	ISO14443A High-Bit-Rate Options	R/W	Section 6.14.1.2.2
0x04	TX Timer Setting, H-byte	R/W	Section 6.14.1.2.3
0x05	TX Timer Setting, L-byte	R/W	Section 6.14.1.2.4
0x06	TX Pulse-Length Control	R/W	Section 6.14.1.2.5
0x07	RX No Response Wait	R/W	Section 6.14.1.2.6
0x08	RX Wait Time	R/W	Section 6.14.1.2.7
0x09	Modulator and SYS_CLK Control	R/W	Section 6.14.1.2.8
0x0A	RX Special Setting	R/W	Section 6.14.1.2.9
0x0B	Regulator and I/O Control	R/W	Section 6.14.1.2.10
Status Registers			
0x0C	IRQ Status	R	Section 6.14.1.3.1
0x0D	Collision Position and Interrupt Mask Register	R/W	Section 6.14.1.3.2
0x0E	Collision Position	R	Section 6.14.1.3.2
0x0F	RSSI Levels and Oscillator Status	R	Section 6.14.1.3.3
FIFO Registers			
0x1A	Test	R/W	Section 6.14.1.4.1
0x1B	Test	R/W	Section 6.14.1.4.2
0x1C	FIFO Status	R	Section 6.14.1.5.1
0x1D	TX Length Byte1	R/W	Section 6.14.1.5.2
0x1E	TX Length Byte2	R/W	Section 6.14.1.5.2
0x1F	FIFO I/O Register	R/W	

Copyright © 2011–2020, Texas Instruments Incorporated

6.14.1.1 Main Configuration Registers

6.14.1.1.1 Chip Status Control Register (0x00)

Table 6-16 describes the bit fields of the Chip Status Control register. This register controls the power mode, RF on or off, AM or PM, and direct mode.

Default Value: 0x01, set at EN = L or POR = H

Table 6-16. Chip Status Control Register (0x00)

BIT NO.	BIT NAME	FUNCTION	DESCRIPTION
B7	stby	1 = Standby mode	Standby mode keeps all supply regulators and the 13.56-MHz SYS_CLK oscillator running (typical start-up time to full operation is 100 µs).
		0 = Active mode	Active mode (default)
B6	direct	1 = Direct mode 0 or 1	Provides user direct access to AFE (direct mode 0) or lets the user add custom framing (direct mode 1). Bit 6 of the ISO Control register must be set before entering direct mode 0 or 1.
		0 = ISO mode (default)	Uses SPI or parallel communication with automatic framing and ISO decoders
B5	rf_on	1 = RF output active	Transmitter on, receivers on
		0 = RF output not active	Transmitter off
B4	rf_pwr	1 = Half output power	TX_OUT (pin 5) = 8-Ω output impedance P = 100 mW (+20 dBm) at 5 V, P = 33 mW (+15 dBm) at 3.3 V
		0 = Full output power	TX_OUT (pin 5) = 4-Ω output impedance P = 200 mW (+23 dBm) at 5 V, P = 70 mW (+18 dBm) at 3.3 V
B3	pm_on	1 = Selects aux RX input	RX_IN2 input is used
		0 = Selects main RX input	RX_IN1 input is used
B2	Reserved		
B1	rec_on	1 = Receiver activated for external field measurement	Forces enabling of receiver and TX oscillator. Used for external field measurement.
		0 = Automatic enable	Allows enable of the receiver by bit 5 of this register
B0	vrs5_3	1 = 5-V operation	Selects the VIN voltage range
		0 = 3-V operation	

Copyright © 2011–2020, Texas Instruments Incorporated

6.14.1.1.2 ISO Control Register (0x01)

Table 6-17 describes the bit fields of the ISO Control register. This register controls the selection of ISO standard protocol, direct mode, and receive CRC.

Default Value: 0x02 (ISO/IEC 15693 high bit rate, one subcarrier, 1 out of 4), reset at EN = L or POR = H

Table 6-17. ISO Control Register (0x01)

BIT NO.	BIT NAME	FUNCTION	DESCRIPTION
B7	rx_crc_n	CRC receive selection	1 = No RX CRC (CRC not present in the response) 0 = RX CRC (CRC is present in the response)
B6	dir_mode	Direct mode type selection	0 = Direct mode 0 1 = Direct mode 1
B5	rfid	RFID mode	0 = RFID mode 1 = Reserved (should be set to 0)
B4	iso_4	RFID	See Table 6-18 for B0:B4 settings based on the ISO protocol that the application requires.
B3	iso_3	RFID	
B2	iso_2	RFID	
B1	iso_1	RFID	
B0	iso_0	RFID	

Table 6-18. ISO Control Register: ISO_4 to ISO_0

iso_4	iso_3	iso_2	iso_1	iso_0	PROTOCOL	REMARKS
0	0	0	0	0	ISO/IEC 15693 low bit rate, 6.62 kbps, one subcarrier, 1 out of 4	
0	0	0	0	1	ISO/IEC 15693 low bit rate, 6.62 kbps, one subcarrier, 1 out of 256	
0	0	0	1	0	ISO/IEC 15693 high bit rate, 26.48 kbps, one subcarrier, 1 out of 4	Default for reader
0	0	0	1	1	ISO/IEC 15693 high bit rate, 26.48 kbps, one subcarrier, 1 out of 256	
0	0	1	0	0	ISO/IEC 15693 low bit rate, 6.67 kbps, double subcarrier, 1 out of 4	
0	0	1	0	1	ISO/IEC 15693 low bit rate, 6.67 kbps, double subcarrier, 1 out of 256	
0	0	1	1	0	ISO/IEC 15693 high bit rate, 26.69 kbps, double subcarrier, 1 out of 4	
0	0	1	1	1	ISO/IEC 15693 high bit rate, 26.69 kbps, double subcarrier, 1 out of 256	
0	1	0	0	0	ISO/IEC 14443 A RX bit rate, 106 kbps	RX bit rate (1)
0	1	0	0	1	ISO/IEC 14443 A RX high bit rate, 212 kbps	
0	1	0	1	0	ISO/IEC 14443 A RX high bit rate, 424 kbps	
0	1	0	1	1	ISO/IEC 14443 A RX high bit rate, 848 kbps	
0	1	1	0	0	ISO/IEC 14443 B RX bit rate, 106 kbps	RX bit rate (1)
0	1	1	0	1	ISO/IEC 14443 B RX high bit rate, 212 kbps	
0	1	1	1	0	ISO/IEC 14443 B RX high bit rate, 424 kbps	
0	1	1	1	1	ISO/IEC 14443 B RX high bit rate, 848 kbps	
1	1	0	1	0	FeliCa 212 kbps	
1	1	0	1	1	FeliCa 424 kbps	

(1) For ISO/IEC 14443 A or B, when bit rate of TX is different from RX, settings can be made in register 0x02 or 0x03.

6.14.1.2 Protocol Subsetting Registers

6.14.1.2.1 ISO14443B TX Options Register (0x02)

Table 6-19 describes the bit fields of the ISO14443B TX Options register. This register selects the ISO subsets for ISO/IEC 14443 B transmit.

Default Value: 0x00, set at POR = H or EN = L

Table 6-19. ISO14443B TX Options Register (0x02)

BIT NO.	BIT NAME	FUNCTION	DESCRIPTION
B7	egt2	TX EGT time select. B7 is the MSB.	This 3-bit code defines the number of etu (0 to 7) that separate two characters. ISO/IEC 14443 B TX only.
B6	egt1		
B5	egt0		
B4	eof_l0	1 = EOF → 0 length 11 etu 0 = EOF → 0 length 10 etu	ISO/IEC 14443 B TX only
B3	sof_l1	1 = SOF → 1 length 03 etu 0 = SOF → 1 length 02 etu	
B2	sof_l0	1 = SOF → 0 length 11 etu 0 = SOF → 0 length 10 etu	
B1	l_egt	1 = EGT after each byte 0 = EGT after last byte is omitted	
B0	Unused		

6.14.1.2.2 ISO14443A High-Bit-Rate and Parity Options Register (0x03)

Table 6-20 describes the bit fields of the ISO14443A High-Bit-Rate and Parity Options register. This register l the ISO subsets for ISO/IEC 14443 A transmit.

Default Value: 0x00, set at POR = H or EN = L and at each write to ISO Control register

Table 6-20. ISO14443A High-Bit-Rate and Parity Options Register (0x03)

BIT NO.	BIT NAME	FUNCTION	DESCRIPTION
B7	dif_tx_br	TX bit rate different from RX bit rate enable	Valid for ISO/IEC 14443 A or B high bit rate
B6	tx_br1	TX bit rate	tx_br1 = 0, tx_br = 0: 106 kbps tx_br1 = 0, tx_br = 1: 212 kbps tx_br1 = 1, tx_br = 0: 424 kbps tx_br1 = 1, tx_br = 1: 848 kbps
B5	tx_br0		
B4	parity-2tx	1 = Parity odd except last byte, which is even for TX	For ISO/IEC 14443 A high-bit-rate coding and decoding
B3	parity-2rx	1 = Parity odd except last byte, which is even for RX	
B2	Unused		
B1	Unused		
B0	Unused		

Copyright © 2011–2020, Texas Instruments Incorporated

6.14.1.2.3 TX Timer High Byte Control Register (0x04)

Table 6-21 describes the bit fields of the TX Timer High Byte Control register. This register sets timings.

Default Value: 0xC2, set at POR = H or EN = L and at each write to the ISO Control register

Table 6-21. TX Timer High Byte Control Register (0x04)

BIT NO.	BIT NAME	FUNCTION	DESCRIPTION
B7	tm_st1	Timer start condition	tm_st1 = 0, tm_st0 = 0: beginning of TX SOF tm_st1 = 0, tm_st0 = 1: end of TX SOF tm_st1 = 1, tm_st0 = 0: beginning of RX SOF tm_st1 = 1, tm_st0 = 1: end of RX SOF
B6	tm_st0	Timer start condition	
B5	tm_lengthD	Timer length MSB	See Table 6-22 for timer length description.
B4	tm_lengthC	Timer length	
B3	tm_lengthB	Timer length	
B2	tm_lengthA	Timer length	
B1	tm_length9	Timer length	
B0	tm_length8	Timer length LSB	

6.14.1.2.4 TX Timer Low Byte Control Register (0x05)

Table 6-22 describes the bit fields of the TX Timer Low Byte Control register. This register sets timings.

Default Value: 0x00, set at POR = H or EN = L and at each write to the ISO Control register

Table 6-22. TX Timer Low Byte Control Register (0x05)

BIT NO.	BIT NAME	FUNCTION	DESCRIPTION
B7	tm_length7	Timer length MSB	Defines the time when delayed transmission is started. RX wait range is 590 ns to 9.76 ms (1 to 16383), Step size is 590 ns, All bits low = timer disabled (0x00) Preset to 0x00 for all other protocols.
B6	tm_length6	Timer length	
B5	tm_length5	Timer length	
B4	tm_length4	Timer length	
B3	tm_length3	Timer length	
B2	tm_length2	Timer length	
B1	tm_length1	Timer length	
B0	tm_length0	Timer length LSB	

6.14.1.2.5 TX Pulse Length Control Register (0x06)

Table 6-23 describes the bit fields of the TX Pulse Length Control register. This register controls the length of TX pulse.

Default Value: 0x00, set at POR = H or EN = L and at each write to ISO Control register

The length of the modulation pulse is defined by the protocol selected in the ISO Control register (0x01). With a high-Q antenna, the modulation pulse is typically prolonged, and the tag detects a longer pulse than intended. For such cases, the modulation pulse length can be corrected by using the TX pulse length register 0x06. If the register contains all zeros, then the pulse length is governed by the protocol selection. If the register contains a value other than 0x00, the pulse length is equal to the value of the register in 73.7-ns increments. This means the range of adjustment can be 73.7 ns to 18.8 µs.

Table 6-23. TX Pulse Length Control Register (0x06)

BIT NO.	BIT NAME	FUNCTION	DESCRIPTION
B7	Pul_p2	Pulse length. B7 is the MSB.	The pulse range is 73.7 ns to 18.8 µs (1 to 255), step size 73.7 ns All bits low (00) = Pulse length control is disabled The following default timings are preset by the ISO Control register (0x01): 9.44 µs for ISO/IEC 15693 (TI Tag-It HF-I) 2.36 µs for ISO/IEC 14443 A at 106 kbps 1.4 µs for ISO/IEC 14443 A at 212 kbps 737 ns for ISO/IEC 14443 A at 424 kbps 442 ns for ISO/IEC 14443 A at 848 kbps; pulse length control disabled
B6	Pul_p1		
B5	Pul_p0		
B4	Pul_c4		
B3	Pul_c3		
B2	Pul_c2		
B1	Pul_c1		
B0	Pul_c0		

6.14.1.2.6 RX No Response Wait Time Register (0x07)

Table 6-24 describes the bit fields of the RX No Response Wait Time register. This register defines the time when no response interrupt is sent; only for ISO/IEC 15693.

Default Value: 0x0E, set at POR = H or EN = L and at each write to ISO Control register

The RX no response timer is controlled by the RX No Response Wait Time register. This timer measures the time from the start of slot in the anticollision sequence until the start of tag response. If there is no tag response in the defined time, an interrupt request is sent and a flag is set in IRQ Status Control register (0x0C). This enables the external controller to be relieved of the task of detecting empty slots. The wait time is stored in the register in increments of 37.76 µs. This register is also preset, automatically, for every new protocol selection.

Table 6-24. RX No Response Wait Time Register (0x07)

BIT NO.	BIT NAME	FUNCTION	DESCRIPTION
B7	NoResp7	No response. B7 is the MSB.	Defines the time when the *no response* interrupt is sent. Timing starts from the end of TX EOF. RX no response wait range is 37.76 µs to 9628 µs (1 to 255). Step size is 37.76 µs. The following default timings are preset by the ISO Control register (0x01): 529 µs for for all protocols that are supported but not listed here 755 µs for ISO/IEC 15693 high data rate (TI Tag-It HF-I) 1812 µs for ISO/IEC 15693 low data rate (TI Tag-It HF-I)
B6	NoResp6		
B5	NoResp5		
B4	NoResp4		
B3	NoResp3		
B2	NoResp2		
B1	NoResp1		
B0	NoResp0		

Copyright © 2011–2020, Texas Instruments Incorporated

6.14.1.2.7 RX Wait Time Register (0x08)

Table 6-25 describes the bit fields of the RX Wait Time register. This register defines the time after TX EOF when the RX input is disregarded; for example, to block out electromagnetic disturbance generated by the responding card.

Default Value: 0x1F, set at POR = H or EN = L and at each write to the ISO Control register

The RX wait time timer is controlled by the value in the RX Wait Time register. This timer defines the time after the end of the transmit operation in which the receive decoders are not active (held in reset state). This prevents incorrect detections resulting from transients following the transmit operation. The value of the RX wait time register defines this time in increments of 9.44 µs. This register is preset at every write to ISO Control register according to the minimum tag response time defined by each standard.

Table 6-25. RX Wait Time Register (0x08)

BIT NO.	BIT NAME	FUNCTION	DESCRIPTION
B7	Rxw7	RX wait time. B7 is the MSB.	Defines the time after the TX EOF during which the RX input is ignored. Time starts from the end of TX EOF. RX wait range is 9.44 µs to 2407 µs (1 to 255). Step size is: 9.44 µs. The following default timings are preset by the ISO Control register (0x01): 9.44 µs for FeliCa 66 µs for ISO/IEC 14443 A and B 293 µs for ISO/IEC 15693 (TI Tag-It HF-I)
B6	Rxw6		
B5	Rxw5		
B4	Rxw4		
B3	Rxw3		
B2	Rxw2		
B1	Rxw1		
B1	Rxw0		

6.14.1.2.8 Modulator and SYS_CLK Control Register (0x09)

Table 6-26 describes the bit fields of the Modulator and SYS_CLK Control register. This register controls the modulation input and depth, ASK/OOK pin control, and clock output to an external system (an MCU).

Default Value: 0x11, set at POR = H or EN = L at each write to the ISO Control register for all bits except Clo1 and Clo0

The frequency of SYS_CLK (pin 27) is programmable by bits B4 and B5 of this register. The frequency of the TRF7960A system clock oscillator is divided by 1, 2, or 4 resulting in available SYS_CLK frequencies of 13.56 MHz, 6.78 MHz, or 3.39 MHz, respectively.

The ASK modulation depth is controlled by bits B0, B1, and B2. The range of ASK modulation is 7% to 30% or 100% (OOK). The selection between ASK and OOK (100%) modulation can also be done using direct input OOK (pin 12). The direct control of OOK or ASK using the OOK pin is only possible if the function is enabled by setting B6 = 1 (en_ook_p) in this register (0x09) and the ISO Control register (0x01, B6 = 1). When configured this way, the MOD pin (pin 14) is used as input for the modulation signal.

Table 6-26. Modulator and SYS_CLK Control Register (0x09)

BIT NO.	BIT NAME	FUNCTION	DESCRIPTION			
B7	Unused					
B6	en_ook_p	1 = Enables external selection of ASK or OOK modulation 0 = Default operation as defined in bits B0 to B2 of this register	Enable ASK/OOK pin (pin 12) for change between any preselected ASK modulation as defined by B0 to B2 and OOK modulation. If B6 is set to 1, pin 12 is configured as: 1 = OOK modulation 0 = Modulation as defined in B0 to B2 (0x09)			
B5	Clo1	SYS_CLK output frequency. B5 is the MSB.	**Clo1**	**Clo0**	**SYS_CLK Output**	
			0	0	Disabled	
			0	1	3.39 MHz	
B4	Clo0		1	0	6.78 MHz	
			1	1	13.56 MHz	
B3	en_ana	1 = Sets pin 12 (ASK/OOK) as an analog output 0 = Default	For test and measurement purpose. ASK/OOK pin 12 can be used to monitor the analog subcarrier signal before the digitizing with DC level equal to AGND.			
B2	Pm2	Modulation depth. B2 is the MSB.	**Pm2**	**Pm1**	**Pm0**	**Modulation Type and Percentage**
			0	0	0	ASK 10%
			0	0	1	OOK (100%)
B1	Pm1		0	1	0	ASK 7%
			0	1	1	ASK 8.5%
			1	0	0	ASK 13%
B0	Pm0		1	0	1	ASK 16%
			1	1	0	ASK 22%
			1	1	1	ASK 30%

Copyright © 2011–2020, Texas Instruments Incorporated

6.14.1.2.9 RX Special Setting Register (0x0A)

Table 6-27 describes the bit fields of the RX Special Setting register. This register sets the gains and filters directly. When bits B7, B6, B5, and B4 are all zero, the filters are set for ISO/IEC 14443B (240 kHz to 1.4 MHz).

Default Value: 0x40, set at POR = H or EN = L and at each write to the ISO Control register (0x01)

Table 6-27. RX Special Setting Register (0x0A)

BIT NO.	BIT NAME	FUNCTION	DESCRIPTION
B7	C212	Band-pass 110 kHz to 570 kHz	Appropriate for 212-kHz subcarrier system (FeliCa)
B6	C424	Band-pass 200 kHz to 900 kHz	
B5	M848	Band-pass 450 kHz to 1.5 MHz	Appropriate for Manchester-coded 848-kHz subcarrier used in ISO/IEC 14443 A
B4	hbt	Band-pass 100 kHz to 1.5 MHz Gain reduced for 18 dB	Appropriate for highest bit rate (848 kbps) used in high-bit-rate ISO/IEC 14443
B3	gd1	00 = Gain reduction 0 dB 01 = Gain reduction for 5 dB 10 = Gain reduction for 10 dB 11 = Gain reduction for 15 dB	Sets the RX gain reduction and reduces sensitivity
B2	gd2		
B1	Reserved		
B0	Reserved		

NOTE

The setting of bits B4, B5, B6, and B7 to zero selects band-pass characteristic of 240 kHz to 1.4 MHz. This is appropriate for ISO/IEC 14443 B, FeliCa protocol, and ISO/IEC 14443 A higher bit rates (212 kbps and 424 kbps).

6.14.1.2.10 Regulator and I/O Control Register (0x0B)

Table 6-28 describes the bit fields of the Regulator and I/O Control register. This register controls the three voltage regulators.

Default Value: 0x87, set at POR = H or EN = L

Table 6-28. Regulator and I/O Control Register (0x0B)

BIT NO.	BIT NAME	FUNCTION	DESCRIPTION
B7	auto_reg	0 = Manual system 1 = Automatic system	Automatic system settings: VDD_RF = VIN – 250 mV VDD_A = VIN – 250 mV VDD_X = VIN – 250 mV, but not higher than 3.4 V Manual system settings: See B2 to B0
B6	en_ext_pa	Support for external power amplifier	Internal peak detectors are disabled, receiver inputs (RX_IN1 and RX_IN2) accept externally demodulated subcarrier. At the same time, the ASK/OOK pin becomes modulation output for external TX amplifier.
B5	io_low	1 = Enable low peripheral communication voltage	When B5 = 1, maintains the output driving capabilities of the I/O pins connected to the level shifter under low-voltage operation. Should be set 1 when VDD_I/O voltage is 1.8 V to 2.7 V.
B4	Unused	No function	Default is 0.
B3	Unused	No function	Default is 0.
B2	vrs2	Voltage set. B2 is the MSB.	vrs3_5 = L:
B1	vrs1		VDD_RF, VDD_A, VDD_X range is 2.7 V to 3.4 V.
B0	vrs0		See Table 6-29, Table 6-30, Table 6-31, and Table 6-32.

Table 6-29. Supply Regulator Setting, Manual 5-V System

REGISTER	OPTION BITS SETTING IN CONTROL REGISTER								ACTION
	B7	B6	B5	B4	B3	B2	B1	B0	
00								1	5-V system
0B	0								Manual regulator setting
0B	0					1	1	1	VDD_RF = 5 V, VDD_A = 3.5 V, VDD_X = 3.4 V
0B	0					1	1	0	VDD_RF = 4.9 V, VDD_A = 3.5 V, VDD_X = 3.4 V
0B	0					1	0	1	VDD_RF = 4.8 V, VDD_A = 3.5 V, VDD_X = 3.4 V
0B	0					1	0	0	VDD_RF = 4.7 V, VDD_A = 3.5 V, VDD_X = 3.4 V
0B	0					0	1	1	VDD_RF = 4.6 V, VDD_A = 3.5 V, VDD_X = 3.4 V
0B	0					0	1	0	VDD_RF = 4.5 V, VDD_A = 3.5 V, VDD_X = 3.4 V
0B	0					0	0	1	VDD_RF = 4.4 V, VDD_A = 3.5 V, VDD_X = 3.4 V
0B	0					0	0	0	VDD_RF = 4.3 V, VDD_A = 3.5 V, VDD_X = 3.4 V

Copyright © 2011–2020, Texas Instruments Incorporated

Table 6-30. Supply Regulator Setting, Manual 3-V System

REGISTER	OPTION BITS SETTING IN CONTROL REGISTER								ACTION
	B7	B6	B5	B4	B3	B2	B1	B0	
00								0	3-V system
0B	0								Manual regulator setting
0B	0					1	1	1	VDD_RF = 3.4 V, VDD_A = 3.4 V, VDD_X = 3.4 V
0B	0					1	1	0	VDD_RF = 3.3 V, VDD_A = 3.3 V, VDD_X = 3.3 V
0B	0					1	0	1	VDD_RF = 3.2 V, VDD_A = 3.2 V, VDD_X = 3.2 V
0B	0					1	0	0	VDD_RF = 3.1 V, VDD_A = 3.1 V, VDD_X = 3.1 V
0B	0					0	1	1	VDD_RF = 3.0 V, VDD_A = 3.0 V, VDD_X = 3.0 V
0B	0					0	1	0	VDD_RF = 2.9 V, VDD_A = 2.9 V, VDD_X = 2.9 V
0B	0					0	0	1	VDD_RF = 2.8 V, VDD_A = 2.8 V, VDD_X = 2.8 V
0B	0					0	0	0	VDD_RF = 2.7 V, VDD_A = 2.7 V, VDD_X = 2.7 V

Table 6-31. Supply Regulator Setting, Automatic 5-V System

REGISTER	OPTION BITS SETTING IN CONTROL REGISTER								ACTION
	B7	B6	B5	B4	B3	B2 (1)	B1	B0	
00								1	5-V system
0B	1					x	1	1	Automatic regulator setting with 250-mV difference
0B	1					x	1	0	Automatic regulator setting with 350-mV difference
0B	1					x	0	0	Automatic regulator setting with 400-mV difference

(1) x = don't care

Table 6-32. Supply Regulator Setting, Automatic 3-V System

REGISTER	OPTION BITS SETTING IN CONTROL REGISTER								ACTION
	B7	B6	B5	B4	B3	B2 (1)	B1	B0	
00								0	3-V system
0B	1					x	1	1	Automatic regulator setting with 250-mV difference
0B	1					x	1	0	Automatic regulator setting with 350-mV difference
0B	1					x	0	0	Automatic regulator setting with 400-mV difference

(1) x = don't care

6.14.1.3 Status Registers

6.14.1.3.1 IRQ Status Register (0x0C)

Table 6-33 describes the bit fields of the IRQ Status register. This register provides information available about TRF7960A IRQ, TX, and RX status.

Default Value: 0x00, set at POR = H or EN = L and at each write to the ISO Control register (0x01). The register is also automatically reset at the end of a read phase. The reset also removes the IRQ flag.

To reset (clear) the register and the IRQ line, the register must be read. During transmit, the decoder is disabled, and only bits B5 and B7 can be changed. During receive, only bit B6 can be changed, but does not trigger the IRQ line immediately. The IRQ signal is set at the end of the transmit or receive phase.

Table 6-33. IRQ Status Register (0x0C)

BIT NO.	BIT NAME	FUNCTION	DESCRIPTION
B7	Irq_tx	IRQ set due to end of TX	Signals that TX is in progress. The flag is set at the start of TX but the interrupt request (IRQ = 1) is sent when TX is finished.
B6	Irg_srx	IRQ set due to RX start	Signals that RX SOF was received and RX is in progress. The flag is set at the start of RX but the interrupt request (IRQ = 1) is sent when RX is finished.
B5	Irq_fifo	FIFO is high or low	Signals when the FIFO is high or low (more than 8 bits during RX or less than 4 bits during TX). See Section 6.12.2 for details.
B4	Irq_err1	CRC error	Indicates receive CRC error only if B7 (no RX CRC) of ISO Control register is set to 0.
B3	Irq_err2	Parity error	Indicates parity error for ISO/IEC 14443 A
B2	Irq_err3	Byte framing or EOF error	Indicates framing error
B1	Irq_col	Collision error	Collision error for ISO/IEC 14443 A and ISO/IEC 15693 single subcarrier. Bit is set if more then 6 or 7 (as defined in register 0x01) are detected inside 1 bit period of ISO/IEC 14443 A 106 kbps. Collision error bit can also be triggered by external noise.
B0	Irq_noresp	No-response time interrupt	No response within the "No-response time" defined in RX No-response Wait Time register (0x07). Signals the MCU that next slot command can be sent. Only for ISO/IEC 15693.

Copyright © 2011–2020, Texas Instruments Incorporated

6.14.1.3.2 Collision Position and Interrupt Mask Registers (0x0D and 0x0E)

Table 6-34 describes the bit fields of the Collision Position and Interrupt Mask register.

Default Value: 0x3E, set at POR = H and EN = L. Collision bits reset automatically after read operation.

Table 6-34. Collision Position and Interrupt Mask Register (0x0D)

BIT NO.	BIT NAME	FUNCTION	DESCRIPTION
B7	Col9	Bit position of collision MSB	Supports ISO/IEC 14443 A
B6	Col8	Bit position of collision	
B5	En_irq_fifo	Interrupt enable for FIFO	Default = 1
B4	En_irq_err1	Interrupt enable for CRC	Default = 1
B3	En_irq_err2	Interrupt enable for Parity	Default = 1
B2	En_irq_err3	Interrupt enable for Framing error or EOF	Default = 1
B1	En_irq_col	Interrupt enable for collision error	Default = 1
B0	En_irq_noresp	Enables no response interrupt	Default = 0

Table 6-35 describes the bit fields of the Collision Position register. This register displays the bit position of collision or error.

Default Value: 0x00, set at POR = H and EN = L. The register is also automatically reset after a read.

Table 6-35. Collision Position Register (0x0E)

BIT NO.	BIT NAME	FUNCTION	DESCRIPTION
B7	Col7	Bit position of collision. B7 is the MSB.	ISO/IEC 14443 A mainly supported; in the other protocols, this register shows the bit position of error. Either frame, SOF/EOF, parity, or CRC error.
B6	Col6		
B5	Col5		
B4	Col4		
B3	Col3		
B2	Col2		
B1	Col1		
B0	Col0		

6.14.1.3.3 RSSI Levels and Oscillator Status Register (0x0F)

Table 6-36 describes the bit fields of the RSSI Levels and Oscillator Status register. This register reports the signal strength on both reception channels and RF amplitude during RF off conditions. The RSSI values are valid from reception start until the start of the next transmission.

RSSI measurement block is measuring the demodulated envelope signal (except in case of direct command for RF amplitude measurement described later in direct commands section). The measuring system is latching the peak value, so the RSSI level can be read after the end of receive packet. The RSSI value is reset during next transmit action of the reader, so the new tag response level can be measured. Section 6.7.1.1 and Section 6.7.1.2 describe the RSSI levels calculated to RF_IN1 and RF_IN2. The RSSI has 7 steps (3 bits) with 4-dB increment. The input level is the peak to peak modulation level of RF signal measured on one side envelope (positive or negative).

Table 6-36. RSSI Levels and Oscillator Status Register (0x0F)

BIT NO.	BIT NAME	FUNCTION	DESCRIPTION
B7	Unused		
B6	osc_ok	Crystal oscillator stable indicator	13.56-MHz frequency stable (approximately 200 µs)
B5	rssi_x2	MSB RSSI value of auxiliary RX (RX_IN2)	Auxiliary channel is by default RX_IN2. The input can be swapped by B3 = 1 (Chip State Control register). If "swapped", the auxiliary channel is connected to RX_IN1 and the auxiliary RSSI represents the signal level at RX_IN1.
B4	rssi_x1	Auxiliary channel RSSI	
B3	rssi_x0	MSB RSSI value of auxiliary RX (RX_IN2)	
B2	rssi_2	MSB RSSI value of Main RX (RX_IN1)	Active channel is the default and can be set with option bit B3 = 0 of the Chip Status Control register (0x00).
B1	rssi_1	Main channel RSSI	
B0	rssi_0	LSB RSSI value of Main RX (RX_IN1)	

Copyright © 2011–2020, Texas Instruments Incorporated

6.14.1.4 Test Registers

6.14.1.4.1 Test Register (0x1A)

Table 6-37 describes the bit fields of the Test register at 0x1A.

Default Value: 0x00, set at POR = H and EN = L

Table 6-37. Test Register (0x1A) (for Test or Direct Use)

BIT NO.	BIT NAME	FUNCTION	DESCRIPTION
B7	OOK_Subc_In	Subcarrier input	OOK pin becomes decoder digital input
B6	MOD_Subc_Out	Subcarrier output	MOD pin becomes receiver subcarrier output
B5	MOD_Direct	Direct TX modulation and RX reset	MOD pin becomes receiver subcarrier output
B4	o_sel	First stage output selection	0 = First stage output used for analog out and digitizing 1 = Second stage output used for analog out and digitizing
B3	low2	Second stage gain –6 dB, HP corner frequency / 2	
B2	low1	First stage gain –6 dB, HP corner frequency / 2	
B1	zun	Input followers test	
B0	Test_AGC	AGC test, AGC level is seen on rssi_210 bits	

6.14.1.4.2 Test Register (0x1B)

Table 6-38 describes the bit fields of the Test register at 0x1B. When a test_dec or test_io is set, the IC is switched to test mode. Test mode persists until a stop condition arrives. At stop condition, the test_dec and test_io bits are cleared.

Default Value: 0x00, set at POR = H and EN = L

Table 6-38. Test Register 2 (0x1B) (for Test or Direct Use)

BIT NO.	BIT NAME	FUNCTION	DESCRIPTION
B7	test_rf_level	RF level test	
B6			
B5			
B4			
B3	test_io1	I/O test	Not implemented
B2	test_io0		
B1	test_dec	Decoder test mode	
B0	clock_su	Coder clock 13.56 MHz	For faster test of coders

6.14.1.5 FIFO Control Registers

6.14.1.5.1 FIFO Status Register (0x1C)

Table 6-39 describes the bit fields of the FIFO Status register. This register contains the low nibbles of the complete bytes to be transferred through the FIFO and information about a broken byte and the number of bits to be transferred from it.

Table 6-39. FIFO Status Register (0x1C)

BIT NO.	BIT NAME	FUNCTION	DESCRIPTION
B7	RFU	B7 = 0	Reserved for future use (RFU)
B6	Fhil	FIFO level high	Indicates that 9 bytes are already in the FIFO (for RX) (also see register 0x0C bit 5)
B5	Flol	FIFO level low	Indicates that only 3 bytes are in the FIFO (for TX) (also see register 0x0C bit 5)
B4	Fove	FIFO overflow error	Too many bytes were written to the FIFO
B3	Fb3	FIFO bytes fb[3]	Bits B0:B3 indicate how many bytes that are loaded in FIFO were not read out yet (displays N – 1 number of bytes). If 8 bytes are in the FIFO, this number is 7 (also see register 0x0C bit 6).
B2	Fb2	FIFO bytes fb[2]	
B1	Fb1	FIFO bytes fb[1]	
B0	Fb0	FIFO bytes fb[0]	

6.14.1.5.2 TX Length Byte1 Register (0x1D) and TX Length Byte2 Register (0x1E)

Table 6-40 describes the bit fields of the TX Length Byte1 register. This register contains the high two nibbles of complete intended bytes to be transferred through FIFO.

Default Value: 0x00, set at POR and EN = 0. The register is also automatically reset at TX EOF.

Table 6-40. TX Length Byte1 Register (0x1D)

BIT NO.	BIT NAME	FUNCTION	DESCRIPTION
B7	Txl11	Number of complete byte bn[11]	High nibble of complete intended bytes to be transmitted
B6	Txl10	Number of complete byte bn[10]	
B5	Txl9	Number of complete byte bn[9]	
B4	Txl8	Number of complete byte bn[8]	
B3	Txl7	Number of complete byte bn[7]	Middle nibble of complete intended bytes to be transmitted
B2	Txl6	Number of complete byte bn[6]	
B1	Txl5	Number of complete byte bn[5]	
B0	Txl4	Number of complete byte bn[4]	

Copyright © 2011–2020, Texas Instruments Incorporated

Table 6-41 describes the bit fields of the TX Length Byte2 register. This register contains the low nibble of the complete bytes to be transferred through FIFO, and information about a broken byte and number of bits to be transferred from it.

Default Value: 0x00, set at POR and EN = 0. The register is also automatically reset at TX EOF.

Table 6-41. TX Length Byte2 Register (0x1E)

BIT NO.	BIT NAME	FUNCTION	DESCRIPTION
B7	Txl3	Number of complete byte bn[3]	Low nibble of complete intended bytes to be transmitted
B6	Txl2	Number of complete byte bn[2]	
B5	Txl1	Number of complete byte bn[1]	
B4	Txl0	Number of complete byte bn[0]	
B3	Bb2	Broken byte number of bits bb[2]	Number of bits in the last broken byte to be transmitted. This value is taken into account only when broken byte flag is set.
B2	Bb1	Broken byte number of bits bb[1]	
B1	Bb0	Broken byte number of bits bb[0]	
B0	Bbf	Broken byte flag	B0 = 1 indicates that last byte is not complete 8 bits wide.

7 Applications, Implementation, and Layout

NOTE

Information in the following Applications section is not part of the TI component specification, and TI does not warrant its accuracy or completeness. TI's customers are responsible for determining suitability of components for their purposes. Customers should validate and test their design implementation to confirm system functionality.

7.1 TRF7960A Reader System Using SPI With SS Mode

7.1.1 General Application Considerations

Figure 7-1 shows the TRF7960A application schematic optimized for both ISO/IEC 15693 and ISO/IEC 14443 systems using the serial port interface (SPI). Short SPI lines, proper isolation to radio frequency lines, and a proper ground area are essential to avoid interference. The recommended clock frequency on the DATA_CLK line is 2 MHz.

This schematic shows matching to a 50-Ω port, which allows connection to a properly matched 50-Ω antenna circuit or RF measurement equipment (for example, a spectrum analyzer or power meter).

7.1.2 Schematic

Figure 7-1 shows a sample application schematic with a serial interface to the MCU.

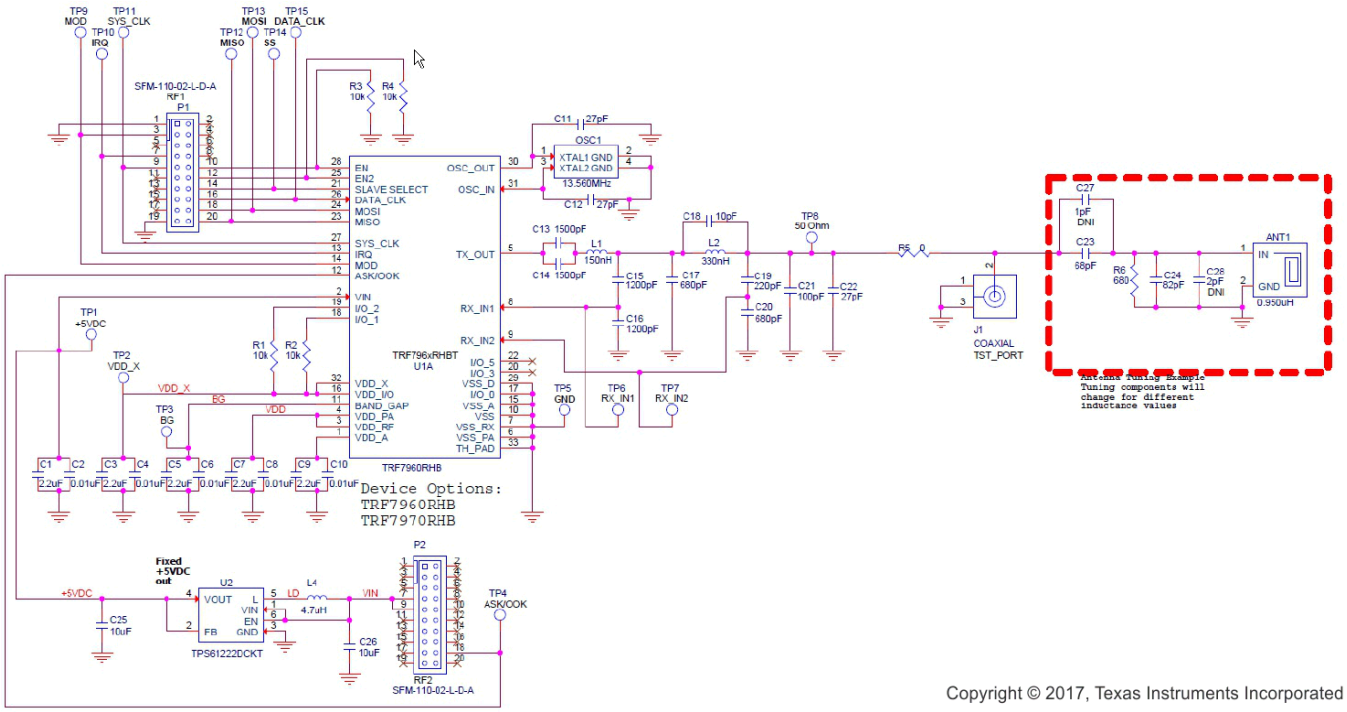

Figure 7-1. Application Schematic, SPI With SS Mode MCU Interface

Minimum MCU requirements depend on application requirements and coding style. If only one ISO protocol or a limited command set of a protocol must be supported, MCU flash and RAM requirements can be significantly reduced. Recursive inventory and anticollision commands require more RAM than single slotted operations. For example, an application for ISO/IEC 15693 only that supports anticollision needs approximately 7KB of flash memory and 500 bytes of RAM. In contrast, a full NFC reader/writer application with NDEF message support needs approximately 45KB of flash memory and 3KB of RAM. An MCU that can run its GPIOs at 13.56 MHz is required for direct mode 0 operations.

Copyright © 2011–2020, Texas Instruments Incorporated

7.2 System Design

7.2.1 Layout Considerations

Keep all decoupling capacitors as close to the IC as possible, with the high-frequency decoupling capacitors (10 nF) closer than the low-frequency decoupling capacitors (2.2 µF).

Place ground vias as close as possible to the ground side of the capacitors and reader IC pins to minimize any possible ground loops.

It is not recommend using any inductor sizes below 0603 as the output power can be compromised. If smaller sized inductors are absolutely necessary, the designer must confirm output performance.

Pay close attention to the required load capacitance of the used crystal and adjust the two external shunt capacitors accordingly. Follow the recommendations of the crystal manufacturer for those values.

There should be a common ground plane for the digital and analog sections. The multiple ground sections or "islands" should have vias that tie the different sections of the planes together.

Ensure that the exposed thermal pad at the center of the IC is properly laid out. It should be tied to ground to help dissipate heat from the package.

Trace line lengths should be minimized whenever possible, particularly the RF output path, crystal connections, and control lines from the reader to the microprocessor. Proper placement of the TRF7960A, microprocessor, crystal, and RF connection/connector help facilitate this.

Avoid crossing of digital lines under RF signal lines. Also, avoid crossing of digital lines with other digital lines whenever possible. If the crossings are unavoidable, 90° crossings should be used to minimize coupling of the lines.

Depending on the production test plan, the designer should consider possible implementations of test pads or test vias for use during testing. The necessary pads and vias should be placed in accordance with the proposed test plan to help enable easy access to those test points.

If the system implementation is complex (for example, if the RFID reader module is a subsystem of a larger system with other modules such as *Bluetooth*®, Wi-Fi®, microprocessors, and clocks), special considerations should be taken to ensure that there is no noise coupling into the supply lines. If needed, special filtering or regulator considerations should be used to minimize or eliminate noise in these systems.

For more information and details on layout considerations, see the *TRF796x HF-RFID Reader Layout Design Guide*.

7.2.2 Impedance Matching TX_Out (Pin 5) to 50 Ω

The output impedance of the TRF7960A when operated at full power out setting is nominally 4 + j0 Ω (4 Ω real). This impedance must be matched to a resonant circuit, and TI recommends a matching circuit from 4 Ω to 50 Ω, as commercially available test equipment (for example, spectrum analyzers, power meters, and network analyzers) are 50-Ω systems. See Figure 7-2 and Figure 7-3 for an impedance match reference circuit. This section explains how the values were calculated.

Starting with the 4-Ω source, Figure 7-2 and Figure 7-3 shows the process of going from 4 Ω to 50 Ω by showing it represented on a Smith Chart simulator (available from http://www.fritz.dellsperger.net/). The elements are grouped together where appropriate.

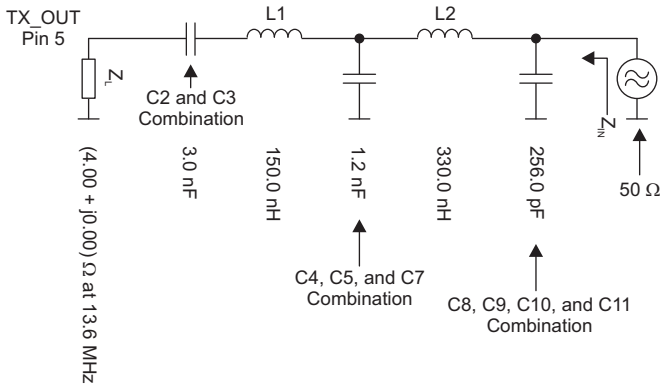

Figure 7-2. Impedance Matching Circuit

This yields the following Smith Chart simulation.

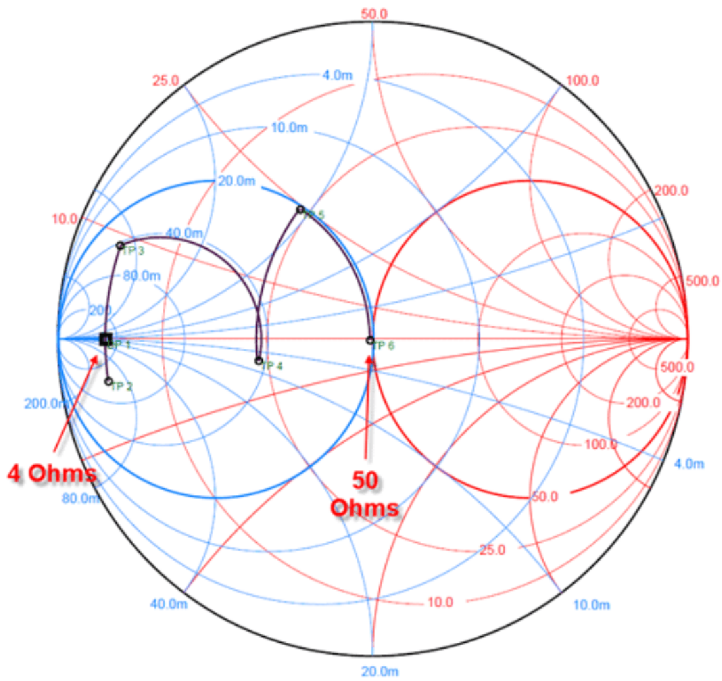

Figure 7-3. Impedance Matching Smith Chart

Resulting power out can be measured with a power meter, spectrum analyzer with power meter function, or other equipment capable of making a "hot" measurement. Take care to observe maximum power input levels on test equipment and use attenuators whenever available to avoid any possibility of damage to expensive equipment. Table 6-3 lists the expected output power levels under various operating conditions.

7.2.3 Reader Antenna Design Guidelines

For HF antenna design considerations using the TRF7960A, see the following documentation:

Antenna Matching for the TRF7960 RFID Reader

TRF7960TB HF RFID Reader Module User's Guide, with antenna details at end of manual

Copyright © 2011–2020, Texas Instruments Incorporated

8 Device and Documentation Support

8.1 Getting Started and Next Steps

For more information on the TI NFC/RFID devices and the tools and software that are available to help with your development, visit Overview for NFC / RFID.

8.2 Device Nomenclature

To designate the stages in the product development cycle, TI assigns prefixes to the part numbers of devices. Each commercial family member has one of three prefixes: x, p, or no prefix. These prefixes represent evolutionary stages of product development from engineering prototypes (with prefix x) through fully qualified production devices (with no prefix).

Device development evolutionary flow:

xTRF... – Experimental device that is not necessarily representative of the electrical specifications of the final device

pTRF... – Final device that conforms to the electrical specifications of the final product but has not completed quality and reliability verification

TRF... – Fully qualified production device

Devices with a prefix of **x** or **p** are shipped against the following disclaimer:

"Developmental product is intended for internal evaluation purposes."

Production devices have been characterized fully, and the quality and reliability of the device have been demonstrated fully. TI's standard warranty applies.

Predictions show that prototype devices have a greater failure rate than the standard production devices. TI recommends that these devices not be used in any production system because their expected end-use failure rate still is undefined. Only qualified production devices are to be used.

TI device nomenclature also includes a suffix with the device family name. This suffix indicates the package type and, optionally, the temperature range. Figure 8-1 provides a legend for reading the complete device name.

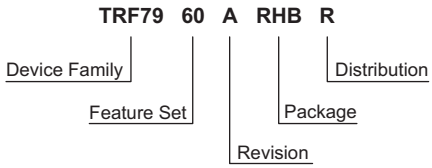

Device Family	TRF79 = NFC/RFID Transceiver
Feature Set	60 = Feature set
Revision	A = Silicon revision
Package	See *Packaging Information* or www.ti.com/package
Distribution	R = Large reel T = Small reel

Figure 8-1. Device Nomenclature

8.3 Tools and Software

Software

TRF7960A C Code Samples Sample source code for direct register control of the device functions.

8.4 Documentation Support

The following documents describe the TRF7960A device. Copies of these documents are available on the Internet at www.ti.com.

Receiving Notification of Document Updates

To receive notification of documentation updates—including silicon errata—go to the product folder for your device on ti.com (for example, TRF7960A). In the upper-right corner, click the "Alert me" button. This registers you to receive a weekly digest of product information that has changed (if any). For change details, check the revision history of any revised document.

Application Notes

TRF79xxA HF-RFID Reader Layout Design Guide Describes some suggested guidelines for use in the laying out the TRF79xxA family of HF RFID readers.

Antenna Matching for the TRF7960 RFID Reader Describes the design method for determining an antenna matching circuit.

TRF7960A Firmware Design Hints A reference for the firmware developer using the TRF7960A in conjunction with microcontroller (for example, an MSP430™ or ARM™ device).

Management of the TRF7960 and TRF7960A Start-up Sequence System developers concerned about minimizing the current draw of TRF7960, TRF7960A, and their variants systems at start-up time need guidance about handling the Regulator Control register (0x0B) value. Valid application use case for this guidance is battery-powered RFID applications in which controlling the entire system current draw over time is of the utmost concern.

TRF7960A RFID Multiplexer Example System This application report describes the 16-channel high-frequency (HF) (13.56 MHz) RFID reader system (based on the TRF7960A IC) designed by TI for customer use. The system firmware resides on an MSP430F2370 MCU and supports the ISO/IEC 15693 protocol in addition to communication with a host.

TRF7960A Reference Firmware Description This application report describes the firmware implemented in the MSP430F2370 for use with the TI TRF7960A evaluation module (EVM). The TRF7960AEVM is a multiple-standard fully integrated 13.56-MHz RFID analog front end and data framing reader system. This document is designed for readers who may or may not be experienced with firmware development for RFID and want to understand the reference firmware and develop their own firmware for the TRF7960A.

Comparison of TRF7960 and TRF7960A This application report helps current and new users of the TRF7960 high-frequency RFID/NFC reader understand the differences between the TRF7960 and the TRF7960A devices. Understanding these differences in detail and applying this knowledge to application-specific requirements helps designers make informed decisions about whether or not a bill of materials change is needed.

8.5 Support Resources

TI E2E™ support forums are an engineer's go-to source for fast, verified answers and design help — straight from the experts. Search existing answers or ask your own question to get the quick design help you need.

Linked content is provided "AS IS" by the respective contributors. They do not constitute TI specifications and do not necessarily reflect TI's views; see TI's Terms of Use.

8.6 Trademarks

E2E is a trademark of Texas Instruments.
Bluetooth is a registered trademark of Bluetooth SIG.
FeliCa is a trademark of Sony Corporation.
Wi-Fi is a registered trademark of Wi-Fi Alliance.

Copyright © 2011–2020, Texas Instruments Incorporated

8.7 Electrostatic Discharge Caution

This integrated circuit can be damaged by ESD. Texas Instruments recommends that all integrated circuits be handled with appropriate precautions. Failure to observe proper handling and installation procedures can cause damage.

ESD damage can range from subtle performance degradation to complete device failure. Precision integrated circuits may be more susceptible to damage because very small parametric changes could cause the device not to meet its published specifications.

8.8 Export Control Notice

Recipient agrees to not knowingly export or re-export, directly or indirectly, any product or technical data (as defined by the U.S., EU, and other Export Administration Regulations) including software, or any controlled product restricted by other applicable national regulations, received from disclosing party under nondisclosure obligations (if any), or any direct product of such technology, to any destination to which such export or re-export is restricted or prohibited by U.S. or other applicable laws, without obtaining prior authorization from U.S. Department of Commerce and other competent Government authorities to the extent required by those laws.

8.9 Glossary

TI Glossary This glossary lists and explains terms, acronyms, and definitions.

9 Mechanical, Packaging, and Orderable Information

The following pages include mechanical, packaging, and orderable information. This information is the most current data available for the designated devices. This data is subject to change without notice and revision of this document. For browser-based versions of this data sheet, refer to the left-hand navigation.

Copyright © 2011–2020, Texas Instruments Incorporated

PACKAGING INFORMATION

Orderable part number	Status (1)	Material type (2)	Package | Pins	Package qty | Carrier	RoHS (3)	Lead finish/ Ball material (4)	MSL rating/ Peak reflow (5)	Op temp (°C)	Part marking (6)
TRF7960ARHBR	Active	Production	VQFN (RHB) | 32	3000 | LARGE T&R	Yes	NIPDAU	Level-2-260C-1 YEAR	-40 to 110	TRF 7960A
TRF7960ARHBR.B	Active	Production	VQFN (RHB) | 32	3000 | LARGE T&R	Yes	NIPDAU	Level-2-260C-1 YEAR	-40 to 110	TRF 7960A
TRF7960ARHBT	Active	Production	VQFN (RHB) | 32	250 | SMALL T&R	Yes	NIPDAU	Level-2-260C-1 YEAR	-40 to 110	TRF 7960A
TRF7960ARHBT.B	Active	Production	VQFN (RHB) | 32	250 | SMALL T&R	Yes	NIPDAU	Level-2-260C-1 YEAR	-40 to 110	TRF 7960A

(1) **Status:** For more details on status, see our product life cycle.

(2) **Material type:** When designated, preproduction parts are prototypes/experimental devices, and are not yet approved or released for full production. Testing and final process, including without limitation quality assurance, reliability performance testing, and/or process qualification, may not yet be complete, and this item is subject to further changes or possible discontinuation. If available for ordering, purchases will be subject to an additional waiver at checkout, and are intended for early internal evaluation purposes only. These items are sold without warranties of any kind.

(3) **RoHS values:** Yes, No, RoHS Exempt. See the TI RoHS Statement for additional information and value definition.

(4) **Lead finish/Ball material:** Parts may have multiple material finish options. Finish options are separated by a vertical ruled line. Lead finish/Ball material values may wrap to two lines if the finish value exceeds the maximum column width.

(5) **MSL rating/Peak reflow:** The moisture sensitivity level ratings and peak solder (reflow) temperatures. In the event that a part has multiple moisture sensitivity ratings, only the lowest level per JEDEC standards is shown. Refer to the shipping label for the actual reflow temperature that will be used to mount the part to the printed circuit board.

(6) **Part marking:** There may be an additional marking, which relates to the logo, the lot trace code information, or the environmental category of the part.

Multiple part markings will be inside parentheses. Only one part marking contained in parentheses and separated by a "~" will appear on a part. If a line is indented then it is a continuation of the previous line and the two combined represent the entire part marking for that device.

Important Information and Disclaimer: The information provided on this page represents TI's knowledge and belief as of the date that it is provided. TI bases its knowledge and belief on information provided by third parties, and makes no representation or warranty as to the accuracy of such information. Efforts are underway to better integrate information from third parties. TI has taken and continues to take reasonable steps to provide representative and accurate information but may not have conducted destructive testing or chemical analysis on incoming materials and chemicals. TI and TI suppliers consider certain information to be proprietary, and thus CAS numbers and other limited information may not be available for release.

In no event shall TI's liability arising out of such information exceed the total purchase price of the TI part(s) at issue in this document sold by TI to Customer on an annual basis.

TAPE AND REEL INFORMATION

REEL DIMENSIONS

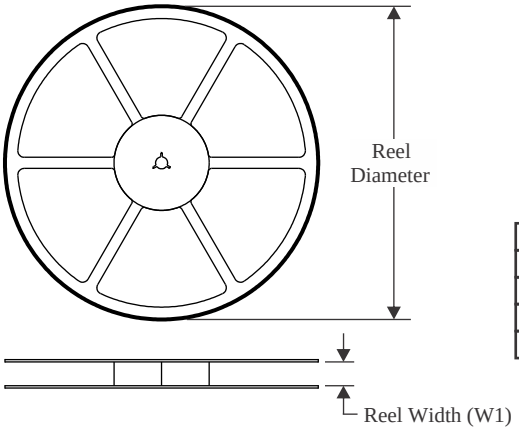

TAPE DIMENSIONS

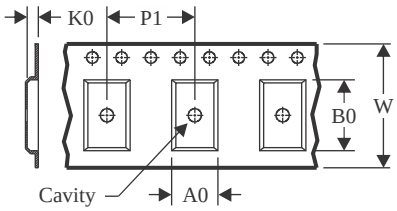

A0	Dimension designed to accommodate the component width
B0	Dimension designed to accommodate the component length
K0	Dimension designed to accommodate the component thickness
W	Overall width of the carrier tape
P1	Pitch between successive cavity centers

QUADRANT ASSIGNMENTS FOR PIN 1 ORIENTATION IN TAPE

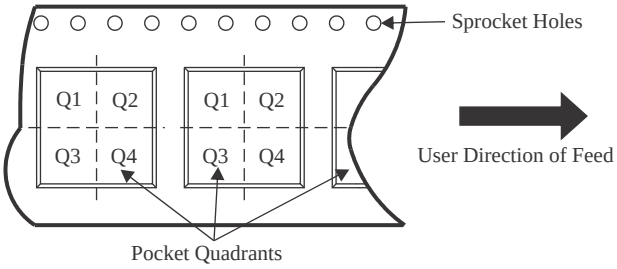

*All dimensions are nominal

Device	Package Type	Package Drawing	Pins	SPQ	Reel Diameter (mm)	Reel Width W1 (mm)	A0 (mm)	B0 (mm)	K0 (mm)	P1 (mm)	W (mm)	Pin1 Quadrant
TRF7960ARHBR	VQFN	RHB	32	3000	330.0	12.4	5.3	5.3	1.5	8.0	12.0	Q2
TRF7960ARHBT	VQFN	RHB	32	250	180.0	12.4	5.3	5.3	1.5	8.0	12.0	Q2

TAPE AND REEL BOX DIMENSIONS

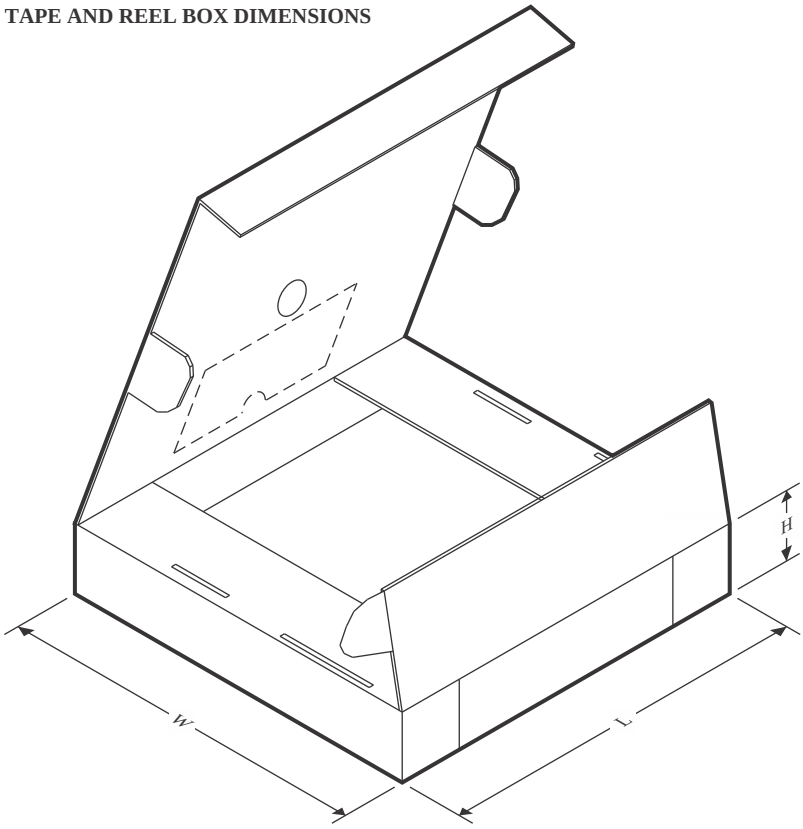

*All dimensions are nominal

Device	Package Type	Package Drawing	Pins	SPQ	Length (mm)	Width (mm)	Height (mm)
TRF7960ARHBR	VQFN	RHB	32	3000	356.0	356.0	35.0
TRF7960ARHBT	VQFN	RHB	32	250	210.0	185.0	35.0

GENERIC PACKAGE VIEW

RHB 32

VQFN - 1 mm max height

5 x 5, 0.5 mm pitch

PLASTIC QUAD FLATPACK - NO LEAD

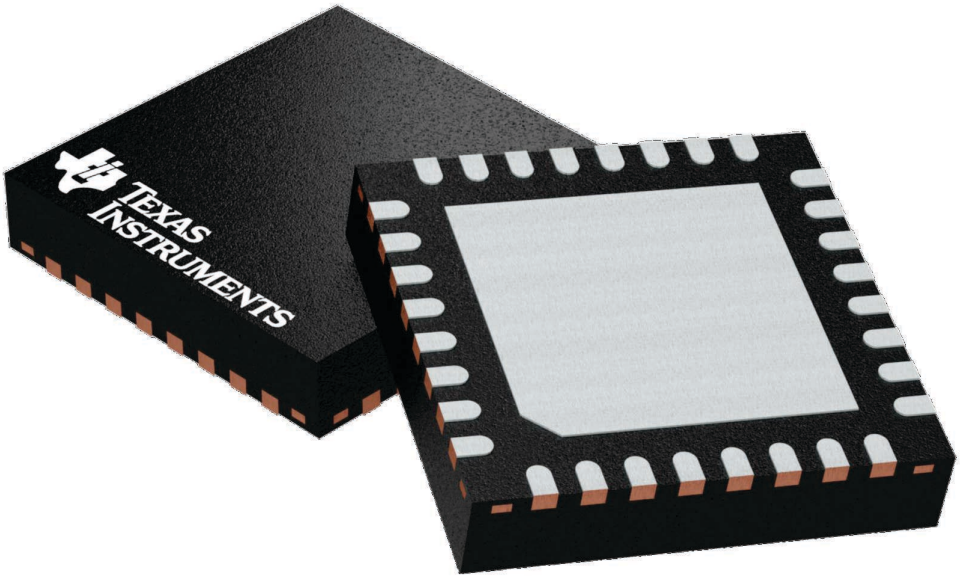

Images above are just a representation of the package family, actual package may vary.
Refer to the product data sheet for package details.

4224745/A

RHB0032E

PACKAGE OUTLINE

VQFN - 1 mm max height

PLASTIC QUAD FLATPACK - NO LEAD

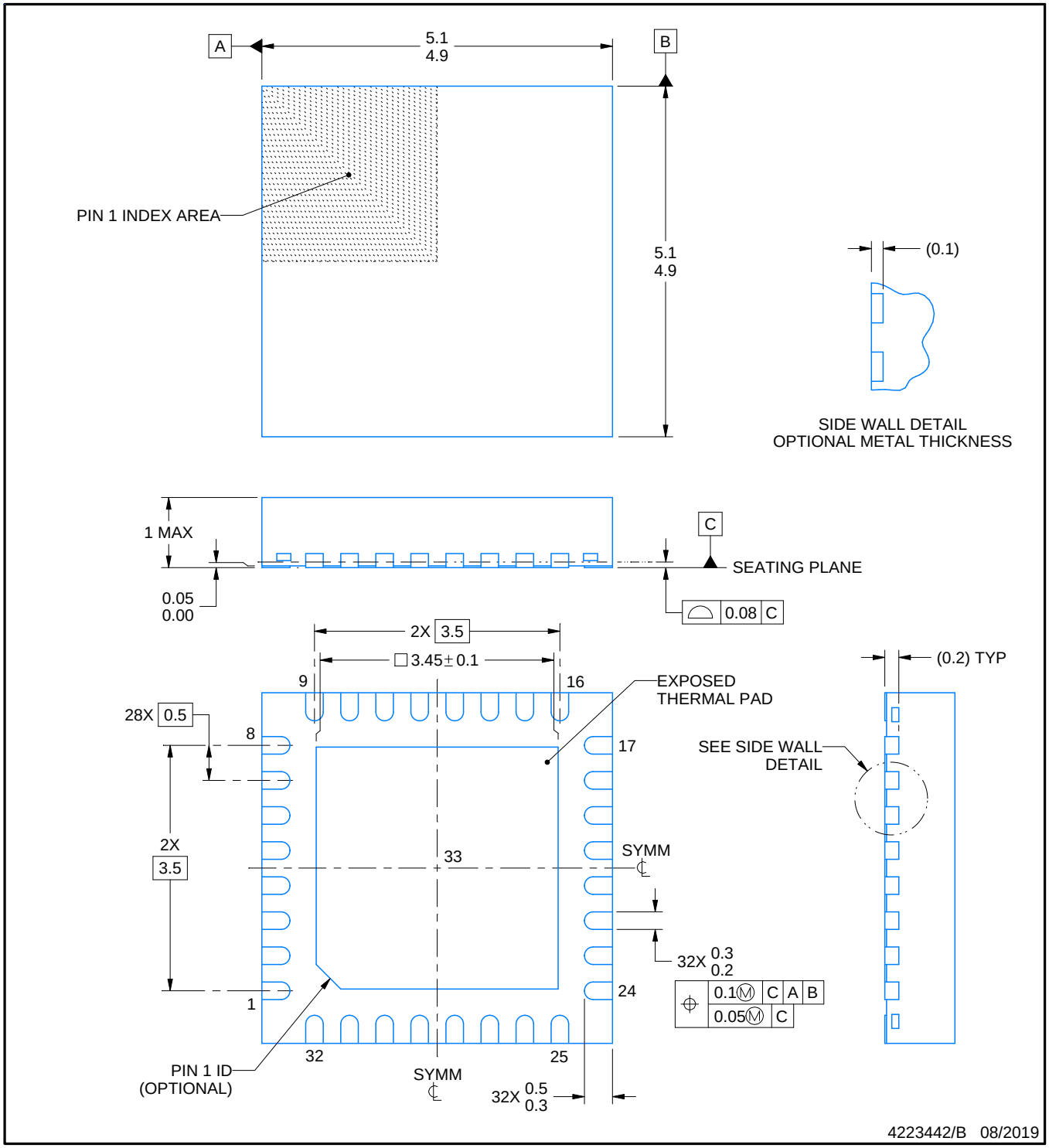

NOTES:

1. All linear dimensions are in millimeters. Any dimensions in parenthesis are for reference only. Dimensioning and tolerancing per ASME Y14.5M.
2. This drawing is subject to change without notice.
3. The package thermal pad must be soldered to the printed circuit board for thermal and mechanical performance.

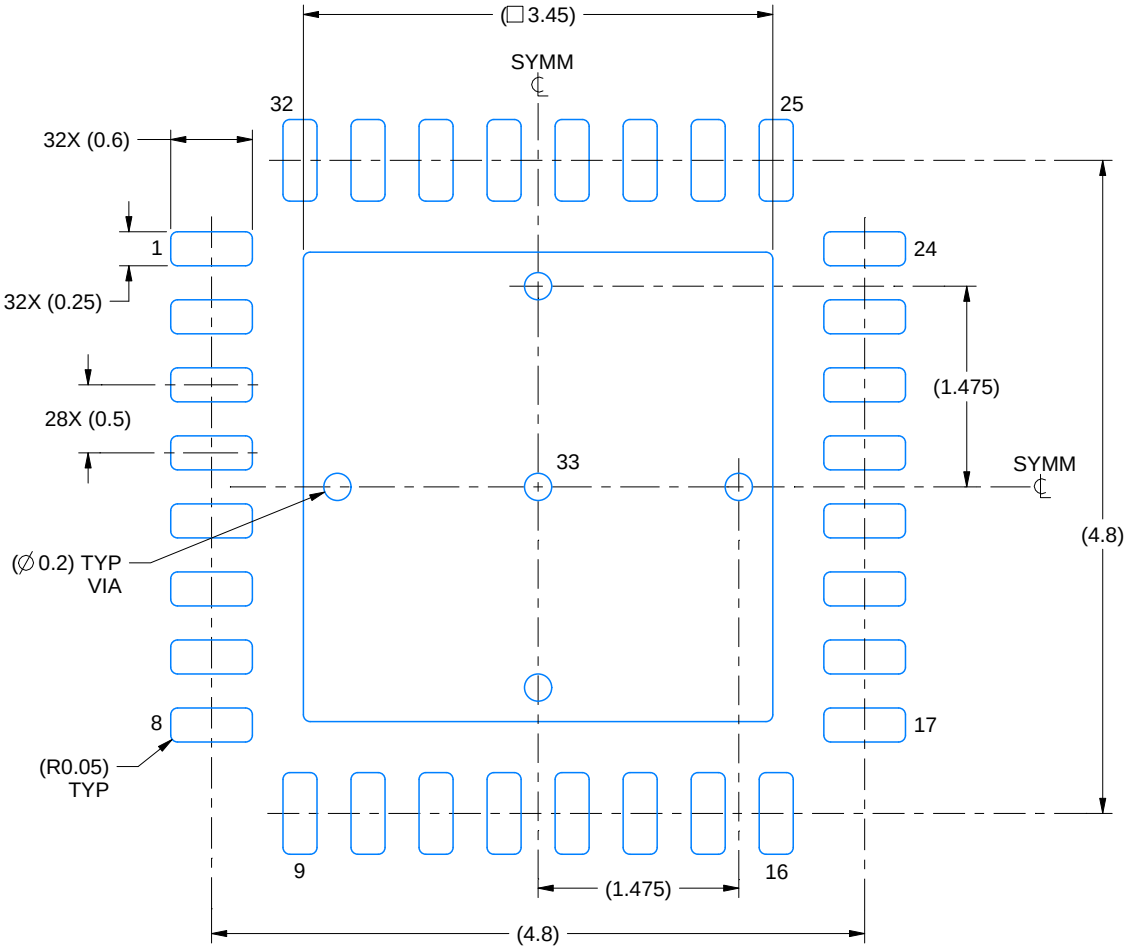

LAND PATTERN EXAMPLE
SCALE:18X

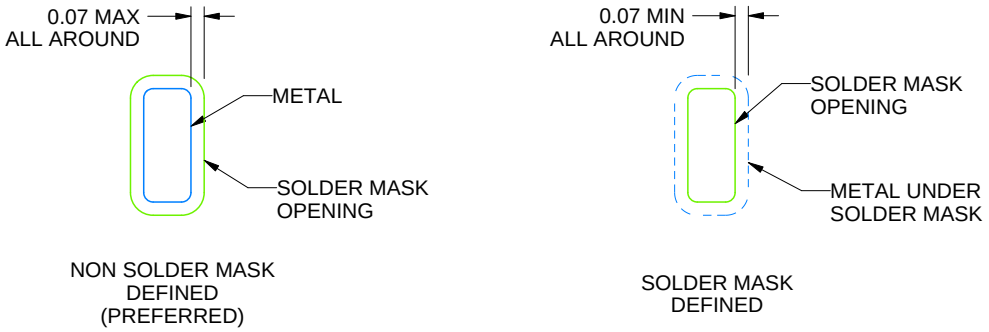

SOLDER MASK DETAILS

4223442/B 08/2019

NOTES: (continued)

4. This package is designed to be soldered to a thermal pad on the board. For more information, see Texas Instruments literature number SLUA271 (www.ti.com/lit/slua271).
5. Vias are optional depending on application, refer to device data sheet. If any vias are implemented, refer to their locations shown on this view. It is recommended that vias under paste be filled, plugged or tented.

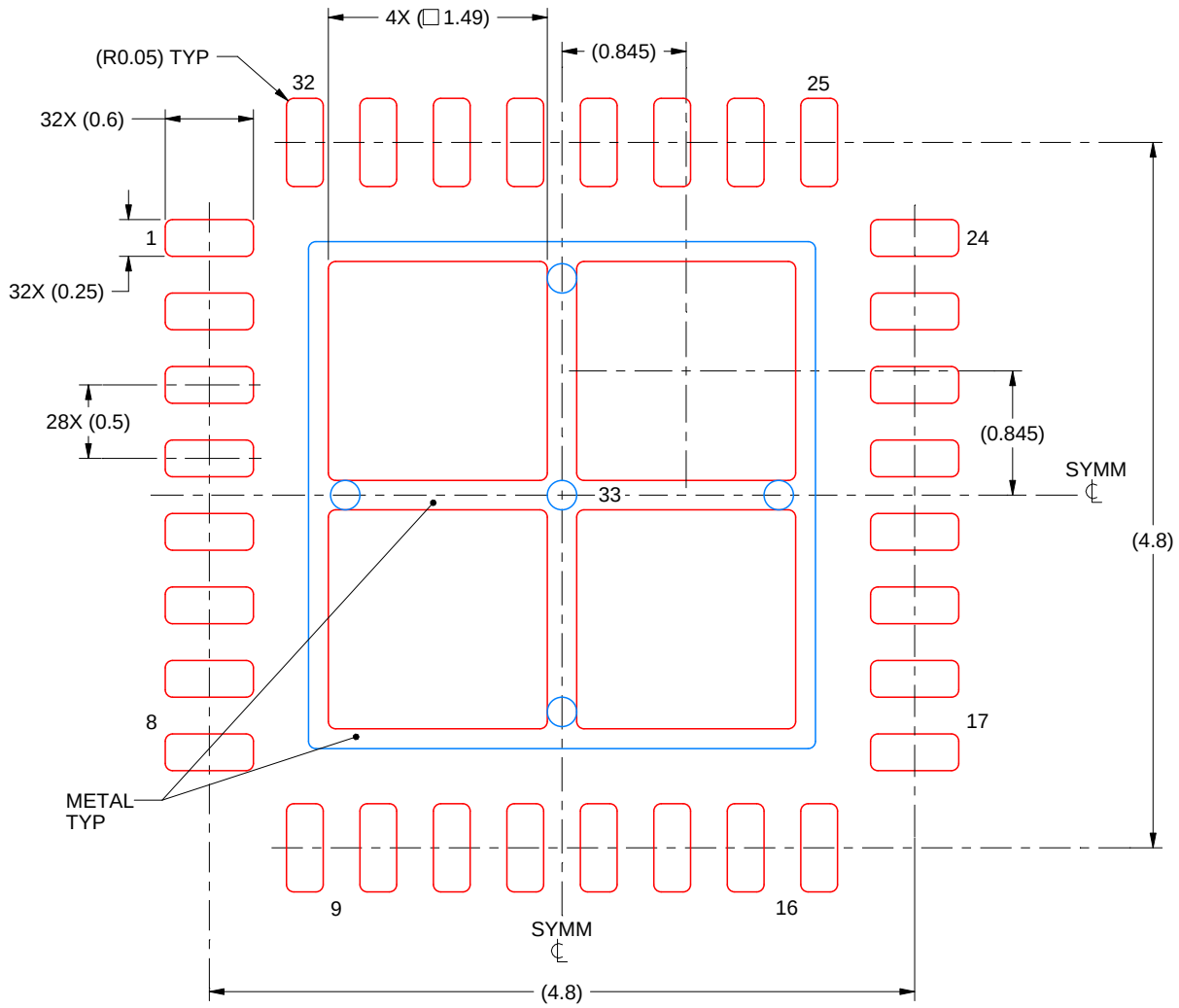

SOLDER PASTE EXAMPLE
BASED ON 0.125 mm THICK STENCIL

EXPOSED PAD 33:
75% PRINTED SOLDER COVERAGE BY AREA UNDER PACKAGE
SCALE:20X

4223442/B 08/2019

NOTES: (continued)

6. Laser cutting apertures with trapezoidal walls and rounded corners may offer better paste release. IPC-7525 may have alternate design recommendations.

IMPORTANT NOTICE AND DISCLAIMER

TI PROVIDES TECHNICAL AND RELIABILITY DATA (INCLUDING DATA SHEETS), DESIGN RESOURCES (INCLUDING REFERENCE DESIGNS), APPLICATION OR OTHER DESIGN ADVICE, WEB TOOLS, SAFETY INFORMATION, AND OTHER RESOURCES “AS IS” AND WITH ALL FAULTS, AND DISCLAIMS ALL WARRANTIES, EXPRESS AND IMPLIED, INCLUDING WITHOUT LIMITATION ANY IMPLIED WARRANTIES OF MERCHANTABILITY, FITNESS FOR A PARTICULAR PURPOSE OR NON-INFRINGEMENT OF THIRD PARTY INTELLECTUAL PROPERTY RIGHTS.

These resources are intended for skilled developers designing with TI products. You are solely responsible for (1) selecting the appropriate TI products for your application, (2) designing, validating and testing your application, and (3) ensuring your application meets applicable standards, and any other safety, security, regulatory or other requirements.

These resources are subject to change without notice. TI grants you permission to use these resources only for development of an application that uses the TI products described in the resource. Other reproduction and display of these resources is prohibited. No license is granted to any other TI intellectual property right or to any third party intellectual property right. TI disclaims responsibility for, and you will fully indemnify TI and its representatives against, any claims, damages, costs, losses, and liabilities arising out of your use of these resources.

TI’s products are provided subject to TI’s Terms of Sale or other applicable terms available either on ti.com or provided in conjunction with such TI products. TI’s provision of these resources does not expand or otherwise alter TI’s applicable warranties or warranty disclaimers for TI products.

TI objects to and rejects any additional or different terms you may have proposed.

Mailing Address: Texas Instruments, Post Office Box 655303, Dallas, Texas 75265
Copyright © 2025, Texas Instruments Incorporated