LP8867-Q1, LP8869-Q1 Low EMI Automotive LED Driver with 4-, 3- Channels

1 Features

- AEC-Q100 Qualified for automotive applications:
  - Device temperature grade 1: –40°C to +125°C, T_A
- Functional safety capable
  - Documentation available to aid functional safety system design
- 3-, 4-Channel 120-mA current sinks
  - High dimming ratio of 10 000:1 at 100 Hz
  - Current matching 1% (typical)
  - LED String current up to 120 mA per channel
  - Outputs can be combined externally for higher current per string
- Integrated boost and SEPIC converter for LED string power
  - Input voltage operating range 4.5 V to 40 V
  - Output voltage up to 45 V
  - Integrated 3.3-A Switch FET
  - Switching frequency 300 kHz to 2.2 MHz
  - Switching synchronization input
  - Spread spectrum for lower EMI
- Fault detection and protection
  - Fault output
  - Input voltage OVP, UVLO and OCP
  - Boost block SW OVP and output OVP
  - LED open and short fault detection
  - Power-Line FET control for battery bus protection
  - Automatic LED current reduction with external temperature sensor
  - Thermal shutdown

Simplified Schematic

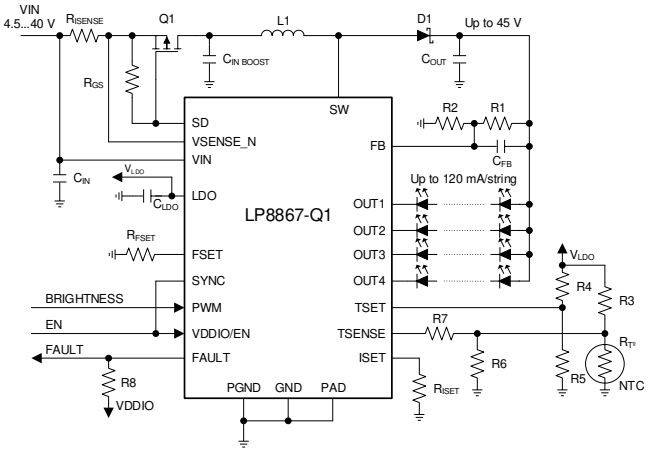

2 Applications

- Backlight for:
  - Automotive infotainment
  - Automotive instrument clusters
  - Smart mirrors
  - Heads-up displays (HUD)

3 Description

The LP8867-Q1, LP8869-Q1 is an automotive highly-integrated, low-EMI, easy-to-use LED driver with DC-DC converter. The DC-DC converter supports both boost and SEPIC mode operation. The device has four or three high-precision current sinks that can be combined for higher current capability.

The DC-DC converter has adaptive output voltage control based on the LED forward voltages. This feature minimizes the power consumption by adjusting the voltage to the lowest sufficient level in all conditions. For EMI reduction DC-DC supports spread spectrum for switching frequency and an external synchronization with dedicated pin. A wide-range adjustable frequency allows the LP886x-Q1 to avoid disturbance for sensitive frequency band.

The input voltage range for the LP886x-Q1 is from 4.5 V to 40 V to support automotive start-stop and load dump condition. The LP886x-Q1 integrates extensive fault detection features.

Device Information(1)

PART NUMBER	PACKAGE	BODY SIZE (NOM)
LP8867-Q1	HTSSOP (20)	6.50 mm × 4.40 mm
LP8869-Q1		

(1) For all available packages, see the orderable addendum at the end of the data sheet.

LED Backlight Efficiency

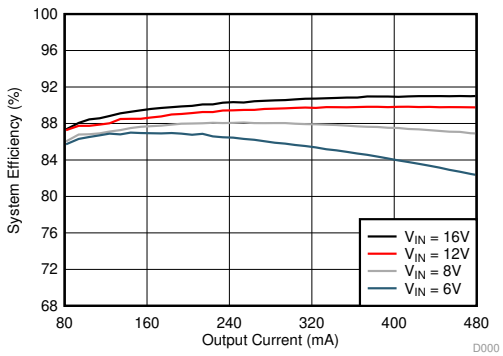

An IMPORTANT NOTICE at the end of this data sheet addresses availability, warranty, changes, use in safety-critical applications, intellectual property matters and other important disclaimers. PRODUCTION DATA.

Table of Contents

1 Features ... 1
2 Applications ... 1
3 Description ... 1
4 Revision History ... 2
5 Device Comparison Table ... 3
6 Pin Configuration and Functions ... 3
7 Specifications ... 5
7.1 Absolute Maximum Ratings ... 5
7.2 ESD Ratings ... 5
7.3 Recommended Operating Conditions ... 5
7.4 Thermal Information ... 6
7.5 Electrical Characteristics ... 6
7.6 Internal LDO Electrical Characteristics ... 6
7.7 Protection Electrical Characteristics ... 6
7.8 Current Sinks Electrical Characteristics ... 7
7.9 PWM Brightness Control Electrical Characteristics ... 7
7.10 Boost and SEPIC Converter Characteristics ... 7
7.11 Logic Interface Characteristics ... 7
7.12 Typical Characteristics ... 9
8 Detailed Description ... 11
8.1 Overview ... 11
8.2 Functional Block Diagram ... 12
8.3 Feature Description ... 13
8.4 Device Functional Modes ... 25
9 Application and Implementation ... 27
9.1 Application Information ... 27
9.2 Typical Applications ... 27
10 Power Supply Recommendations ... 32
11 Layout ... 32
11.1 Layout Guidelines ... 32
11.2 Layout Example ... 33
12 Device and Documentation Support ... 34
12.1 Device Support ... 34
12.2 Documentation Support ... 34
12.3 Receiving Notification of Documentation Updates ... 34
12.4 Community Resources ... 34
12.5 Trademarks ... 34
12.6 Electrostatic Discharge Caution ... 34
12.7 Glossary ... 34
13 Mechanical, Packaging, and Orderable Information ... 34

4 Revision History

Changes from Revision A (July 2019) to Revision B	Page
• Added the functional safety link to the *Features* section	1

Changes from Original (June 2019) to Revision A	Page
• Changed from Advance Information to Production Data	1

Copyright © 2019–2020, Texas Instruments Incorporated

5 Device Comparison Table

	LP8869-Q1	LP8869C-Q1	LP8867-Q1	LP8867C-Q1
Number of LED channels	3	3	4	4
LED current / channel	120 mA	120 mA	120 mA	120 mA
Power Line FET Control and Automatic Current De-rating Support	Yes	No	Yes	No

6 Pin Configuration and Functions

LP8867-Q1 PWP Package
20-Pin HTSSOP With Exposed Thermal Pad
Top View

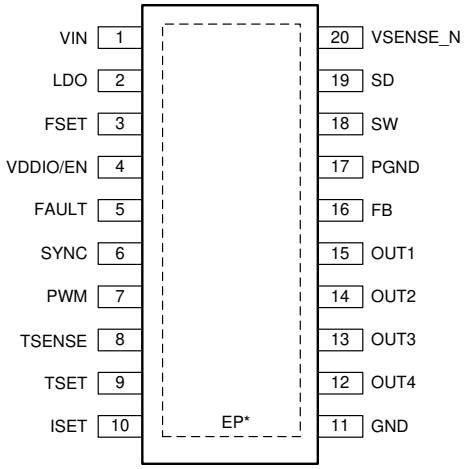

*EXPOSED PAD

LP8869-Q1 PWP Package
20-Pin HTSSOP With Exposed Thermal Pad
Top View

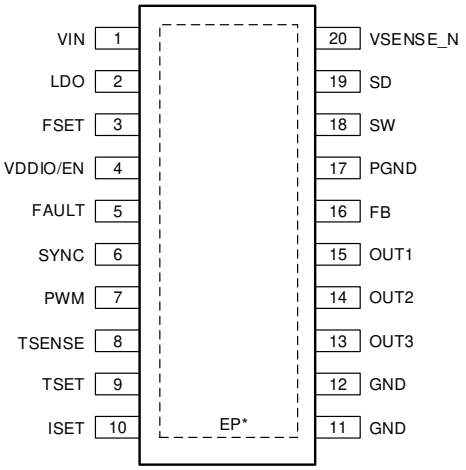

*EXPOSED PAD

Pin Functions

PIN		TYPE (1)	DESCRIPTION
NO.	NAME		
1	VIN	A	Input power pin; input voltage OVP detection pin; input current sense positive input pin.
2	LDO	A	Output of internal LDO; connect a 1-µF decoupling capacitor between this pin and noise-free ground. Put the capacitor as close to the chip as possible.
3	FSET	A	DC-DC (boost or SEPIC) switching frequency setting resistor; for normal operation, resistor value from 24 kΩ to 219 kΩ must be connected between this pin and ground.
4	VDDIO/EN	I	Enable input for the device as well as supply input (VDDIO) for digital pins.
5	FAULT	OD	Fault signal output. If unused, the pin may be left floating.
6	SYNC	I	Input for synchronizing DC-DC converter. If synchronization is not used, connect this pin to ground to disable spread spectrum or to VDDIO/EN to enable spread spectrum.
7	PWM	I	PWM dimming input.
8	TSENSE	A	Input for NTC resistor divider. Refer to *LED Current Dimming With External Temperature Sensor* for proper connection. If unused, the pin must be left floating.
9	TSET	A	Input for NTC resistor divider. Refer to *LED Current Dimming With External Temperature Sensor* for proper connection. If unused, the pin must be connected to GND.
10	ISET	A	LED current setting resistor; for normal operation, resistor value from 20 kΩ to 129 kΩ must be connected between this pin and ground.
11	GND	G	Ground.
12	OUT4/GND	A	Current sink output for LP8867-Q1 This pin must be connected to ground if not used. GND pin for LP8869-Q1
13	OUT3	A	Current sink output. This pin must be connected to ground if not used.
14	OUT2	A	Current sink output. This pin must be connected to ground if not used.
15	OUT1	A	Current sink output. This pin must be connected to ground if not used.
16	FB	A	DC-DC (boost or SEPIC) feedback input; for normal operation this pin must be connected to the middle of a resistor divider between V_{OUT} and ground using feedback resistor values greater than 5kΩ.
17	PGND	G	DC-DC (boost or SEPIC) power ground.
18	SW	A	DC-DC (boost or SEPIC) switch pin.
19	SD	A	Power-line FET control. Open Drain (current sink type) Output. If unused, the pin may be left floating.
20	VSENSE_N	A	Input current sense negative input. Connect to VIN pin when input current sense resistor is not used.

(1) A: Analog pin, G: Ground pin, P: Power pin, I: Input pin, I/O: Input/Output pin, O: Output pin, OD: Open Drain pin

Copyright © 2019–2020, Texas Instruments Incorporated

7 Specifications

7.1 Absolute Maximum Ratings

over operating free-air temperature range (unless otherwise noted)[1][2]

		MIN	MAX	UNIT
Voltage on pins	VIN, VSENSE_N, SD, SW, FB	–0.3	50	V
	OUT1, OUT2, OUT3, OUT4	–0.3	45	
	LDO, SYNC, FSET, ISET, TSENSE, TSET, PWM, VDDIO/EN, FAULT	–0.3	5.5	
Continuous power dissipation[3]		Internally Limited		
Ambient temperature, T_A[4]		–40	125	°C
Junction temperature, T_J[4]		–40	150	°C
Storage temperature, T_{stg}		–65	150	°C

(1) Stresses beyond those listed under *Absolute Maximum Ratings* may cause permanent damage to the device. These are stress ratings only, which do not imply functional operation of the device at these or any other conditions beyond those indicated under *Recommended Operating Conditions*. Exposure to absolute-maximum-rated conditions for extended periods may affect device reliability.
(2) All voltages are with respect to the potential at the GND pins.
(3) Internal thermal shutdown circuitry protects the device from permanent damage. Thermal shutdown engages at T_J = 165°C (typical) and disengages at T_J = 145°C (typical).
(4) In applications where high power dissipation and/or poor package thermal resistance is present, the maximum ambient temperature may have to be derated. Maximum ambient temperature ($T_{A\text{-}MAX}$) is dependent on the maximum operating junction temperature ($T_{J\text{-}MAX\text{-}OP}$ = 150°C), the maximum power dissipation of the device in the application ($P_{D\text{-}MAX}$), and the junction-to-ambient thermal resistance of the part/package in the application ($R_{\theta JA}$), as given by the following equation: $T_{A\text{-}MAX} = T_{J\text{-}MAX\text{-}OP} - (R_{\theta JA} \times P_{D\text{-}MAX})$.

7.2 ESD Ratings

				VALUE	UNIT
$V_{(ESD)}$	Electrostatic discharge	Human-body model (HBM), per AEC Q100-002, all pins[1]		±2000	V
		Charged-device model (CDM), per AEC Q100-011	Corner pins (1, 10, 11 and 20)	±750	
			All pins	±500	

(1) AEC Q100-002 indicates that HBM stressing shall be in accordance with the ANSI/ESDA/JEDEC JS-001 specification.

7.3 Recommended Operating Conditions

Over operating free-air temperature range (unless otherwise noted)[1]

		MIN	NOM	MAX	UNIT
Voltage on pins	VIN	4.5	12	45	V
	SW, VSENSE_N, SD	0		45	
	OUT1, OUT2, OUT3, OUT4	0		40	
	FB, FSET, LDO, ISET, TSENSE, TSET, VDDIO/EN, FAULT	0		5.25	
	SYNC, PWM	0		VDDIO/EN	

(1) All voltages are with respect to the potential at the GND pins.

7.4 Thermal Information

THERMAL METRIC[1]		LP886x-Q1 PWP (HTSSOP) 20 PINS	UNIT
$R_{\theta JA}$	Junction-to-ambient thermal resistance[2]	44.2	°C/W
$R_{\theta JCtop}$	Junction-to-case (top) thermal resistance	26.5	°C/W
$R_{\theta JB}$	Junction-to-board thermal resistance	22.4	°C/W
ψ_{JT}	Junction-to-top characterization parameter	0.9	°C/W
ψ_{JB}	Junction-to-board characterization parameter	22.2	°C/W
$R_{\theta JCbot}$	Junction-to-case (bottom) thermal resistance	2.5	°C/W

(1) For more information about traditional and new thermal metrics, see *Semiconductor and IC Package Thermal Metrics*.
(2) Junction-to-ambient thermal resistance is highly application and board-layout dependent. In applications where high maximum power dissipation exists, special care must be paid to thermal dissipation issues in board design.

7.5 Electrical Characteristics

Limits apply over the full operation temperature range −40°C ≤ T_A ≤ +125°C , unless otherwise speicified, V_{IN} = 12V.

PARAMETER		TEST CONDITIONS	MIN	TYP	MAX	UNIT
I_Q	Standby supply current	Device disabled, $V_{VDDIO/EN}$ = 0 V, V_{IN} = 12 V		4.5	20	µA
	Active supply current	V_{IN} = 12 V, V_{OUT} = 26 V, output current 80 mA/channel, converter f_{SW} = 300 kHz		5	12	mA

7.6 Internal LDO Electrical Characteristics

Limits apply over the full operation temperature range −40°C ≤ T_A ≤ +125°C , unless otherwise speicified, V_{IN} = 12V.

PARAMETER		TEST CONDITIONS	MIN	TYP	MAX	UNIT
V_{LDO}	Output voltage	V_{IN} = 12 V	4.15	4.3	4.55	V
V_{DR}	Dropout voltage		120	300	430	mV
I_{SHORT}	Short circuit current			50		mA
I_{EXT}	Current for external load				5	mA

7.7 Protection Electrical Characteristics

Limits apply over the full operation temperature range −40°C ≤ T_A ≤ +125°C , unless otherwise speicified, V_{IN} = 12V.

PARAMETER		TEST CONDITIONS	MIN	TYP	MAX	UNIT
V_{OVP}	VIN OVP threshold voltage		41	42	44	V
V_{OCP}	VIN OCP threshold voltage, VIN - VSENSEN		135	160	186	mV
V_{UVLO}	VIN UVLO Falling threshold		3.7	3.85	4	V
V_{UVLO_HYST}	VIN UVLO Rising threshold - VIN UVLO Fallling threshold			150		mV
I_{SENSE_N}	VSENSE_N pin leakage	VSENSE_N = 45V, EN = L		0.1	3	µA
I_{SD_LEAK}	SD pin leakage	VSD = 45V, EN = L		0.1	3	µA
I_{SD}	SD pull down current		185	230	283	µA
V_{FB_OVP}	FB threshold for BST_OVP fault			2.3		V
T_{TSD}	Thermal shutdown Rising threshold		150	165	175	℃
T_{TSD_HYS}	Thermal shutdown Rising threshold - Thermal shutdown Falling threshold			20		℃

Copyright © 2019–2020, Texas Instruments Incorporated

7.8 Current Sinks Electrical Characteristics

Limits apply over the full operation temperature range −40°C ≤ T_A ≤ +125°C , unless otherwise speicified, V_{IN} = 12V.

PARAMETER		TEST CONDITIONS	MIN	TYP	MAX	UNIT
$I_{LEAKAGE}$	Leakage current	Outputs OUT1 to OUT4 , V_{OUTx} = 45 V, EN = L		0.1	5	µA
I_{MAX}	Maximum current	OUT1, OUT2, OUT3, OUT4, R_{ISET} = 20 kΩ		120		mA
I_{OUT}	Output current accuracy	I_{OUT} = 100 mA	−5%		5%	
I_{MATCH}	Output current matching (1)	I_{OUT} = 100 mA, PWM duty =100%		1%	5%	
V_{LOW_COMP}	Low comparator threshold			0.9		V
V_{MID_COMP}	Mid comparator threshold			1.9		V
V_{HIGH_COMP}	High comparator threshold		5.6	6	7	V

(1) Output Current Accuracy is the difference between the actual value of the output current and programmed value of this current. Matching is the maximum difference from the average. For the constant current sinks on the part (OUTx), the following are determined: the maximum output current (MAX), the minimum output current (MIN), and the average output current of all outputs (AVG). Matching number is calculated: (MAX-MIN)/AVG. The typical specification provided is the most likely norm of the matching figure for all parts. LED current sinks were characterized with 1-V headroom voltage. Note that some manufacturers have different definitions in use.

7.9 PWM Brightness Control Electrical Characteristics

Limits apply over the full operation temperature range −40°C ≤ T_A ≤ +125°C , unless otherwise speicified, V_{IN} = 12V.

PARAMETER		TEST CONDITIONS	MIN	TYP	MAX	UNIT
f_{PWM}	PWM input frequency		100		20 000	Hz
$t_{ON/OFF}$	Minimum on/off time (1)			0.5		µs

(1) This specification is not ensured by ATE.

7.10 Boost and SEPIC Converter Characteristics

Limits apply over the full operation temperature range −40°C ≤ T_A ≤ +125°C , unless otherwise speicified, V_{IN} = 12V.

PARAMETER		TEST CONDITIONS	MIN	TYP	MAX	UNIT
V_{IN}	Input voltage		4.5		40	V
V_{OUT}	Output voltage		6		45	
f_{SW_MIN}	Minimum switching frequency	Defined by R_{FSET} resistor		300		kHz
f_{SW_MAX}	Maximum switching frequency	Defined by R_{FSET} resistor		2 200		kHz
t_{OFF}	Minimum switch OFF time (1)	f_{SW} ≥ 1.15 MHz			55	ns
I_{SW_MAX}	SW current limit first triggerred		3.3	3.7	4.1	A
t_{SW_MAX}	SW current limit first triggerred period			1.6		s
I_{SW_LIM}	SW current limit		3	3.35	3.7	A
R_{DSON}	FET R_{DSON}			240	400	mΩ
f_{SYNC}	External SYNC frequency		300		2 200	kHz
t_{SYNC_ON}	External SYNC on time (1)		150			ns
t_{SYNC_OFF}	External SYNC off time (1)		150			ns

(1) This specification is not ensured by ATE.

7.11 Logic Interface Characteristics

Limits apply over the full operation temperature range −40°C ≤ T_A ≤ +125°C , unless otherwise speicified, V_{IN} = 12V.

PARAMETER		TEST CONDITIONS	MIN	TYP	MAX	UNIT
LOGIC INPUT VDDIO/EN						
V_{IL}	Input low level				0.4	V
V_{IH}	Input high level		1.65			V
I_{EN}	Input DC current		−1	5	30	µA
	Input transient current during VDDIO/EN powering up				1.2	mA
LOGIC INPUT SYNC, PWM						

Logic Interface Characteristics (continued)

Limits apply over the full operation temperature range −40°C ≤ T_A ≤ +125°C , unless otherwise speicified, V_{IN} = 12V.

PARAMETER		TEST CONDITIONS	MIN	TYP	MAX	UNIT
V_{IL}	Input low level				0.2 × VDDIO/EN	V
V_{IH}	Input high level		0.8 × VDDIO/EN			V
I_I	Input current		−1		1	µA
LOGIC OUTPUT FAULT						
V_{OL}	Output low level	Pullup current 3 mA		0.3	0.5	V
$I_{LEAKAGE}$	Output leakage current	V = 5.5 V			1	µA

Copyright © 2019–2020, Texas Instruments Incorporated

7.12 Typical Characteristics

Unless otherwise specified: D = NRVB460MFS, T_A = 25°C

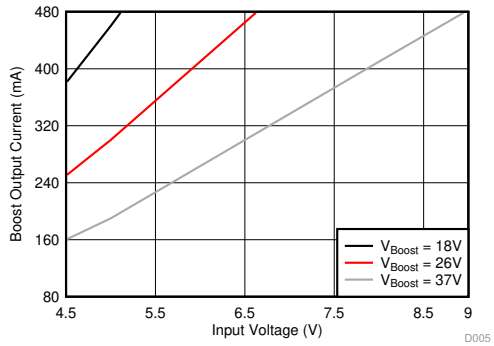

f_{SW} = 400 kHz L = 33 µH DC Load (PWM = 100%)
C_{IN} and C_{OUT} = 33 µF (electrolytic) + 2 × 10 µF (ceramic)

Figure 1. Maximum Boost Current

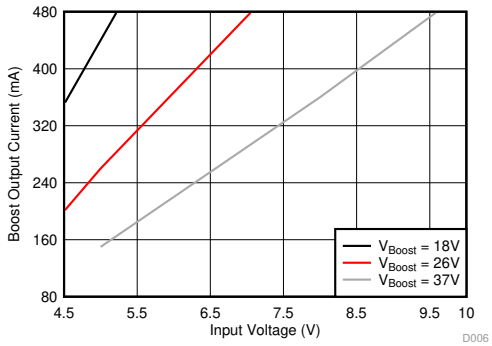

f_{SW} = 1.1 MHz L = 15 µH DC Load (PWM = 100%)
C_{IN} and C_{OUT} = 33 µF (electrolytic) + 10 µF (ceramic)

Figure 2. Maximum Boost Current

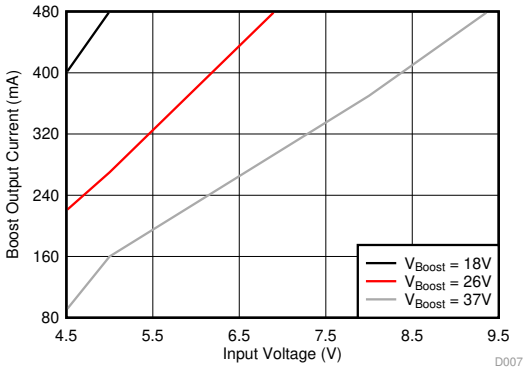

f_{SW} = 2.2 MHz L = 10 µH DC Load (PWM = 100%)
C_{IN} and C_{OUT} = 3× 10 µF (ceramic)

Figure 3. Maximum Boost Current

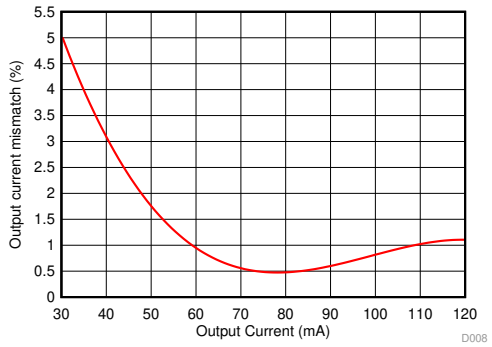

Figure 4. LED Current Sink Matching

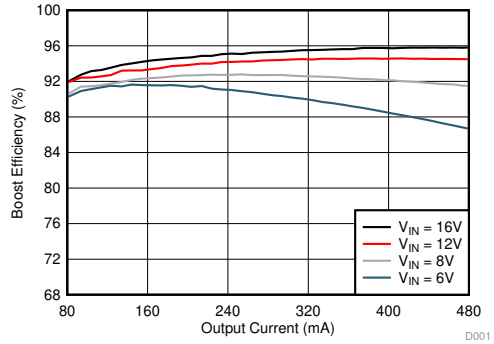

f_{SW} = 400 kHz L = 22 µH DC Load (PWM = 100%)
C_{IN} and C_{OUT} = 33 µF (electrolytic) + 2 × 10 µF (ceramic) V_{BOOST} = 18 V

Figure 5. Boost Efficiency

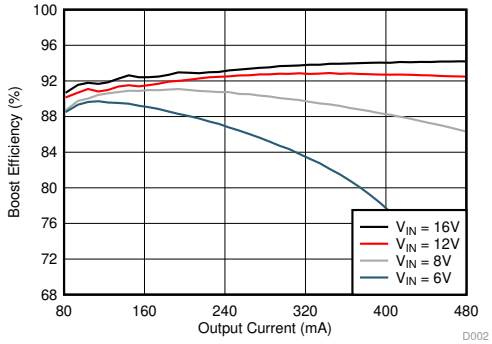

f_{SW} = 400 kHz L = 22 µH DC Load (PWM = 100%)
C_{IN} and C_{OUT} = 33 µF (electrolytic) + 2 × 10 µF (ceramic) V_{BOOST} = 30 V

Figure 6. Boost Efficiency

Typical Characteristics (continued)

Unless otherwise specified: D = NRVB460MFS, T_A = 25°C

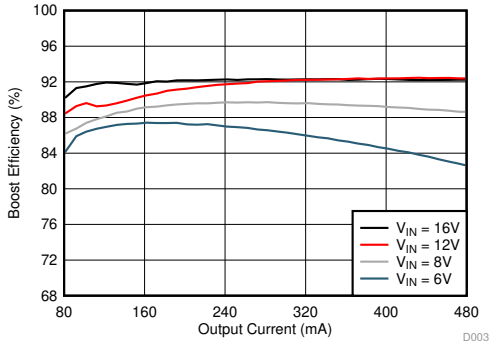

f_{SW} = 2.2 MHz L = 4.7 µH DC Load (PWM = 100%)
C_{IN} and C_{OUT} = 3 × 10 µF (ceramic) V_{BOOST} = 18 V

Figure 7. Boost Efficiency

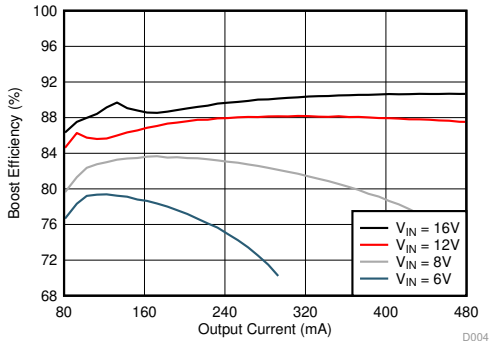

f_{SW} = 2.2 MHz L = 4.7 µH DC Load (PWM = 100%)
C_{IN} and C_{OUT} = 3 × 10 µF (ceramic) V_{BOOST} = 30 V

Figure 8. Boost Efficiency

Copyright © 2019–2020, Texas Instruments Incorporated

8 Detailed Description

8.1 Overview

The LP8867-Q1, LP8869-Q1 is a highly integrated LED driver for automotive infotainment , cluster and HUD medium-size LCD backlight applications. It includes a DC-DC with an integrated FET, supporting both boost and SEPIC modes, an internal LDO enabling direct connection to battery without need for a pre-regulated supply and 3 or 4 LED current sinks. The VDDIO/EN pin provides the supply voltage for digital IOs (PWM and SYNC inputs) and at the same time enables the device.

The switching frequency on the DC-DC converter is set by a resistor connected to the FSET pin. The maximum voltage of the DC-DC is set by a resistive divider connected to the FB pin. For the best efficiency, the output voltage is adapted automatically to the minimum necessary level needed to drive the LED strings. This is done by monitoring LEDs' cathode voltage in real time. For EMI reduction, two optional features are available:

- Spread spectrum, which reduces EMI noise around the switching frequency and its harmonic frequencies
- DC-DC can be synchronized to an external frequency connected to SYNC pin

The 3 or 4 constant current outputs OUT1, OUT2, OUT3, and OUT4 provide LED current up to 120 mA. Value for the current per OUT pin is set with a resistor connected to ISET pin. Current sinks that are not used must be connected to ground. Grounded current sink is disabled and excluded from boost adaptive voltage detection loop.

Brightness is controlled with the PWM input. Frequency range for the input PWM is from 100 Hz to 20 kHz. LED output PWM behavior follows the input PWM so the output frequency is equal to the input frequency.

LP886x-Q1 has extensive fault detection features:

- LED open and short detection
- V_{IN} input overvoltage protection
- V_{IN} input undervoltage protection
- V_{IN} input overcurrent protection
- V_{Boost} output overvoltage protection
- SW overvoltage protection
- Thermal shutdown in case of chip overheated

Fault condition is indicated through the FAULT output pin.

8.2 Functional Block Diagram

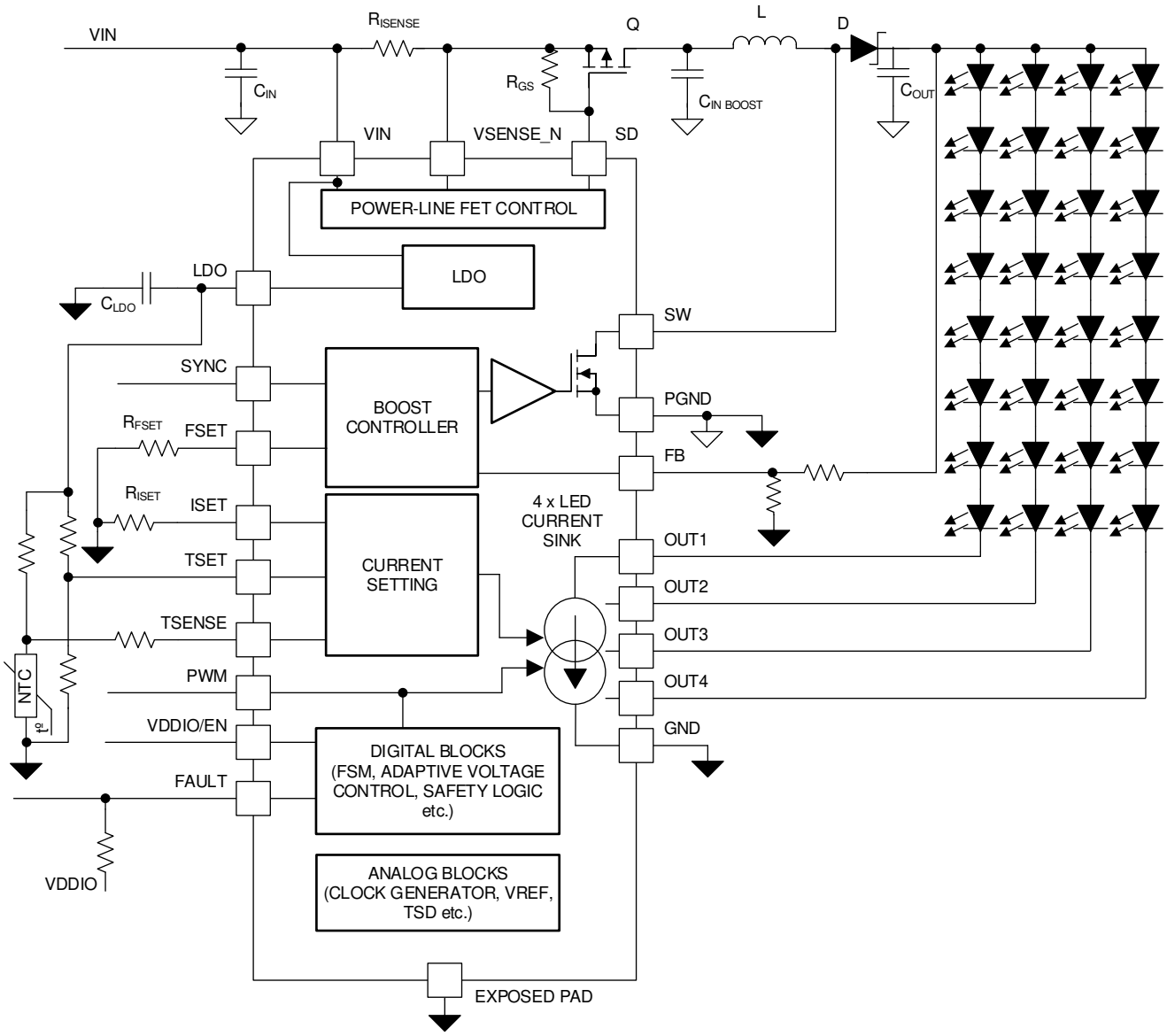

Copyright © 2019–2020, Texas Instruments Incorporated

8.3 Feature Description

8.3.1 Integrated DC-DC Converter

The LP886x-Q1 DC-DC converter generates supply voltage for the LEDs and can operate in boost mode or in SEPIC mode. The output voltage, switching frequency are all configured by external resistors.

For detailed boost application, refer to *Typical Application for 4 LED Strings*

For detailed SEPIC application, refer to *SEPIC Mode Application*

8.3.1.1 DC-DC Converter Parameter Configuration

The LP886x-Q1 converter is a current-peak mode DC-DC converter, where the switch FET's current and the output voltage feedback are measured and controlled. The block diagram is shown in Figure 9.

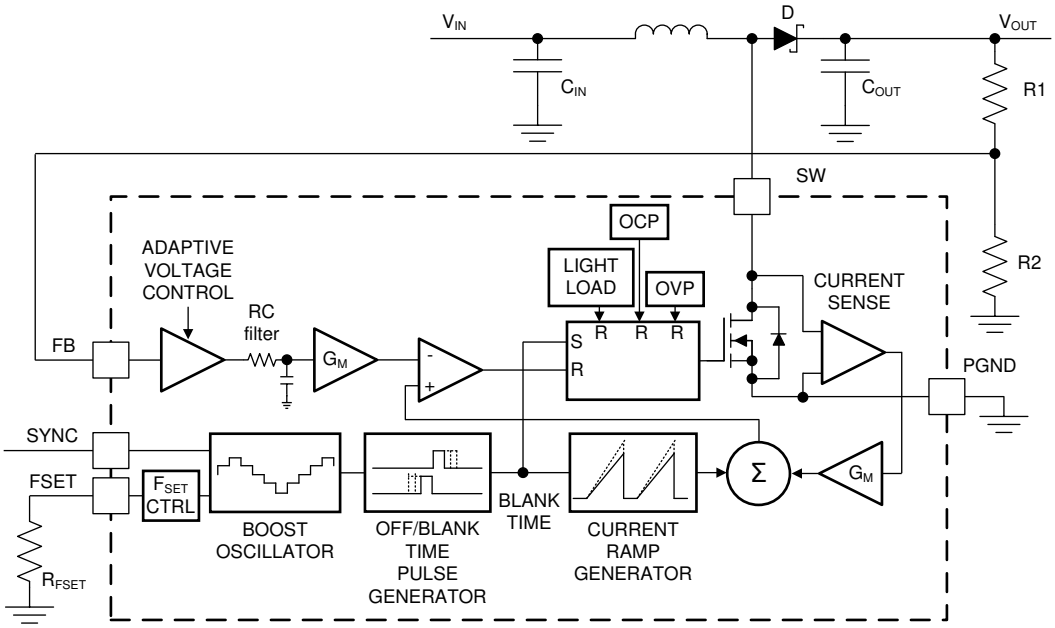

Figure 9. DC-DC converter in Boost Application

8.3.1.1.1 Switching Frequency

Switching frequency is adjustable between 300 kHz and 2.2 MHz with R_{FSET} resistor as Equation 1:

$$f_{SW} = 67600 / (R_{FSET} + 6.4) \quad (1)$$

where

- f_{SW} is switching frequency, kHz
- R_{FSET} is frequency setting resistor, kΩ

For example, if R_{FSET} is set to 163 kΩ, f_{SW} will be 400 kHz.

In most cases, lower switching frequency has higher system efficiency and lower internal temperature increase.

8.3.1.1.2 Spread Spectrum and External SYNC

LP886x-Q1 has an optional spread spectrum feature (±3% from central frequency, 1-kHz modulation frequency) which reduces EMI noise at the switching frequency and its harmonic frequencies. If SYNC pin level is low, spread spectrum function is disabled. If SYNC pin level is high, spread spectrum function is enabled.

LP886x-Q1 DC-DC converter can be driven by an external SYNC signal between 300 kHz and 2.2 MHz. When external synchronization is used, spread spectrum is not available. If the external synchronization input disappears, DC-DC continues operation at the frequency defined by R_{FSET} resistor and spread spectrum function will be enabled/disabled depending on the final SYNC pin level.

Feature Description (continued)

External SYNC frequency must be 1.2 to 1.5 times higher than the frequency defined by R_{FSET} resistor. In external SYNC configuration, minimum frequency setting with R_{FSET} could go as low as 250 kHz to support 300-kHz switching with external clock.

Table 1. DC-DC Synchronization Mode

SYNC PIN INPUT	MODE
Low	Spread spectrum disabled
High	Spread spectrum enabled
300 to 2200 kHz frequency	Spread spectrum disabled, external synchronization mode

8.3.1.1.3 Recommended Component Value and Internal Parameters

The LP886x-Q1 DC-DC converter has an internal compensation network to ensure the stability. There's no external component needed for compensation. It's strongly recommended that the inductance value and the boost input and output capacitors value follow the requirement of Table 2. Also, the DC-DC internal parameters are chosen automatically according to the selected switching frequency (see Table 2) to ensure stability.

Table 2. Boost Converter Parameters(1)

RANGE	FREQUENCY (kHz)	TYPICAL INDUCTANCE (µH)	TYPICAL BOOST INPUT AND OUTPUT CAPACITORS (µF)	MINIMUM SWITCH OFF TIME (ns)(2)	BLANK TIME (ns)
1	300 to 480	22 or 33	2 ×10 (cer.) + 33 (electr.)	150	95
2	480 to 1150	15	10 (cer.) + 33 (electr.)	60	95
3	1150 to 1650	10	3 × 10 (cer.)	40	95
4	1650 to 2200	4.7 or 10	3 × 10 (cer.)	40	70

(1) Parameters are for reference only
(2) Due to current sensing comparator delay the actual minimum off time is 6 ns (typical) longer than in the table.

8.3.1.1.4 DC-DC Converter Switching Current Limit

The LP886x-Q1 DC-DC converter has an internal SW FET inside chip's SW pin. The internal FET current is limited to 3.35 A (typical). The DC-DC converter will sense the internal FET current, and turn off the internal FET cycle-by-cycle when the internal FET current reaches the limit.

To support start transient condition, the current limit could be automatically increased to 3.7 A for a short period of 1.6 seconds when a 3.35-A limit is reached.

NOTE

Application condition where the 3.35-A limit is exceeded continuously is not allowed. In this case the current limit would be 3.35 A for 1.6 seconds followed by 3.7-A limit for 1.6 seconds, and this 3.2-second period repeats.

8.3.1.1.5 DC-DC Converter Light Load Mode

LP886x-Q1 DC-DC converter will enter into light load mode in below condition:

- V_{IN} voltage is very close to V_{OUT}
- Loading current is very low
- PWM pulse width is very short

When DC-DC converter enters into light load mode, DC-DC converter stops switching occasionally to make sure boost output voltage won't rise up too much. It could also be called as PFM mode, since the DC-DC converter switching frequency will change in this mode.

Copyright © 2019–2020, Texas Instruments Incorporated

8.3.1.2 Adaptive Voltage Control

The LP886x-Q1 DC/DC converter generates the supply voltage for the LEDs. During normal operation, boost output voltage is adjusted automatically based on the LED cathode (OUTx pin) voltages. This is called adaptive boost control. Only the active LED outputs are monitored to control the adaptive boost voltage. Any LED strings with open or short faults are removed from the adaptive voltage control loop. The OUTx pin voltages are periodically monitored by the control loop. The boost voltage is raised if any of the OUTx voltage falls below the V_{LOW_COMP} threshold. The boost voltage is also lowered if all OUTx voltages are higher than V_{LOW_COMP} threshold. The boost voltage keeps unchanged when one of OUTx voltage touches the V_{LOW_COMP} threshold. In normal operation, the lowest voltage among the OUTx pins is around V_{LOW_COMP}, and boost voltage stays constant. V_{LOW_COMP} level is the minimum voltage which could guarantee proper LED current sink operation. See Figure 10 for how the boost voltage automatically scales based on the OUT1-4 pin voltage.

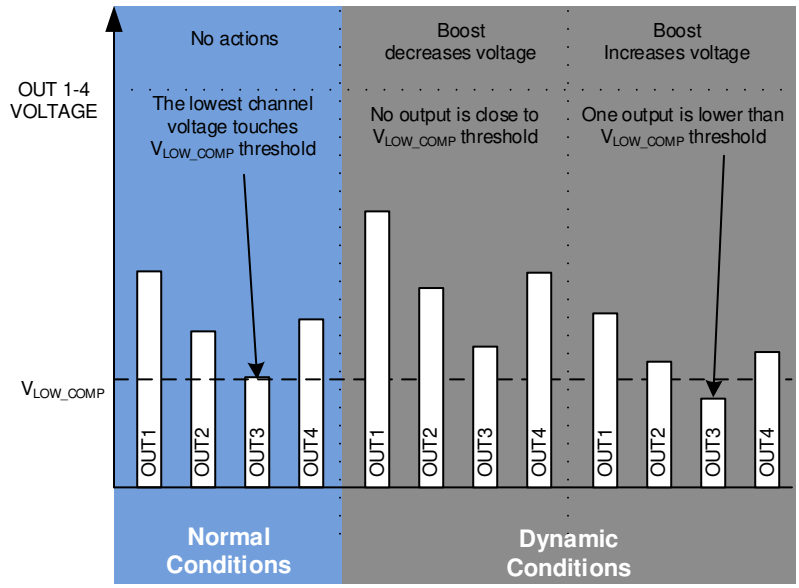

Figure 10. Adaptive Boost Voltage Control Loop Function

8.3.1.2.1 Using Two-Divider

V_{BOOST_MAX} voltage should be chosen based on the maximum voltage required for LED strings. Recommended maximum voltage is about 3 to 5-V higher than maximum LED string voltage. DC-DC output voltage is adjusted automatically based on LED cathode voltage. The maximum, minimum and initial boost voltages can be calculated with Equation 2:

$$V_{BOOST} = \left(\frac{V_{BG}}{R2} + K \times 0.0387\right) \times R1 + V_{BG}$$

where

- V_{BG} = 1.2 V
- R2 recommended value is 10 kΩ to 200 kΩ
- R1/R2 recommended value is 5 to 10
- K = 1 for maximum adaptive boost voltage (typical)
- K = 0 for minimum adaptive boost voltage (typical)
- K = 0.88 for initial boost voltage (typical) (2)

For example, if R1 is set to 750 kΩ and R2 is set to 130 kΩ, V_{BOOST} will be in the range of 8.1 V to 37.1 V.

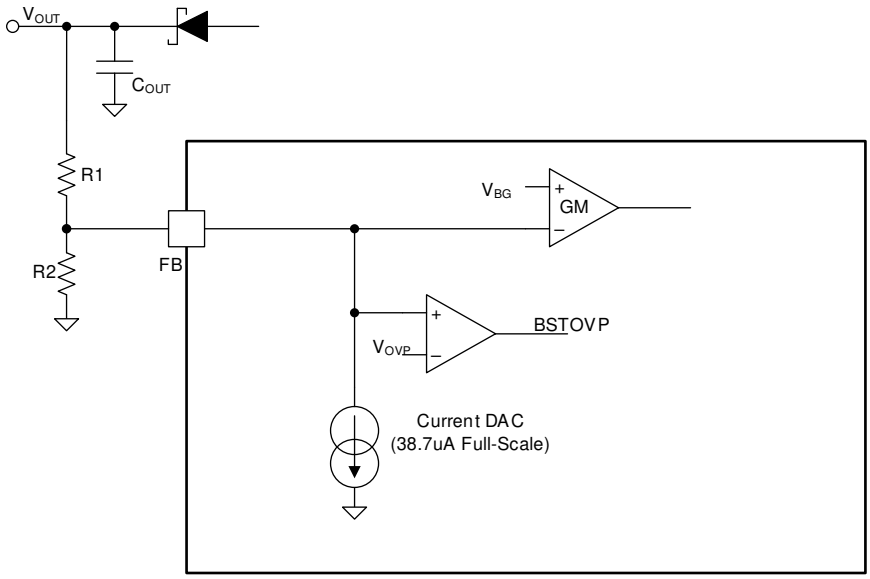

Figure 11. FB External Two-Divider Resistors

8.3.1.2.2 Using T-Divider

Alternatively, a T-divider can be used if resistance less than 100 kΩ is required for the external resistive divider. Then the maximum, minimum and initial boost voltages can be calculated with

$$V_{BOOST} = \left(\frac{R1 \times R3}{R2} + R1 + R3\right) K \times 0.0387 + \left(\frac{R1}{R2} + 1\right) \times V_{BG} \tag{3}$$

where

- V_{BG} = 1.2 V
- R2 recommended value is 10 kΩ to 200 kΩ
- R1/R2 recommended value is 5 to 10
- K = 1 for maximum adaptive boost voltage (typical)
- K = 0 for minimum adaptive boost voltage (typical)
- K = 0.88 for initial boost voltage (typical)

For example, if R1 is set to 100 kΩ, R2 is set to 10 kΩ and R3 is set to 60 kΩ, V_{BOOST} will be in the range of 13.2 V to 42.6 V.

Copyright © 2019–2020, Texas Instruments Incorporated

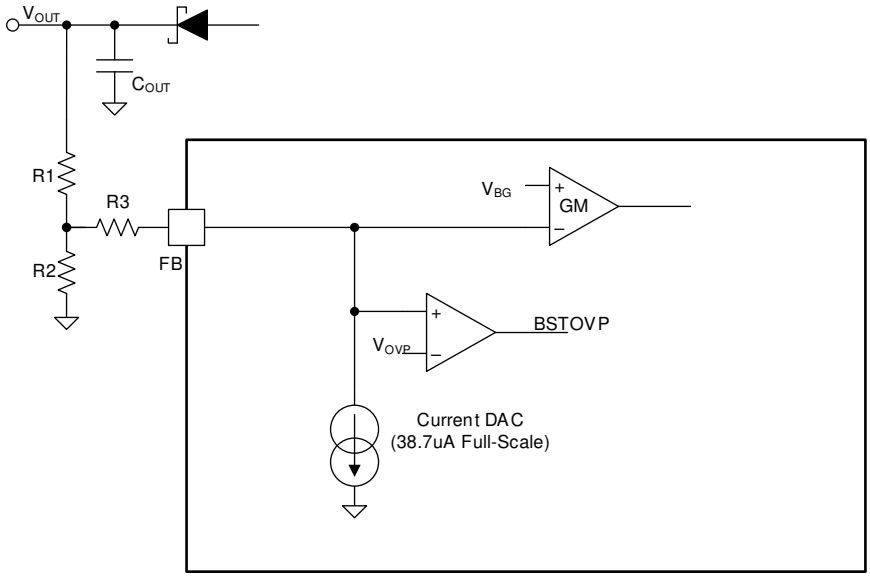

Figure 12. FB External T-divider Resistors

8.3.1.2.3 Feedback Capacitor

When operating with no electrolytic capacitor in boost output, which is a typical case when boost frequency is in the 1.15-MHz to 2.2-MHz range, a feedback capacitor needs to be put in parallel with R1 to ensure the loop stability. The value of the capacitor is recommended to be:

$$C_{FB} = \frac{1}{2\pi f_z R1}$$

where

- f_z = 20 kHz (4)

For example, if R_1 is set to 750 kΩ, C_{FB} needs to be around 11 pF.

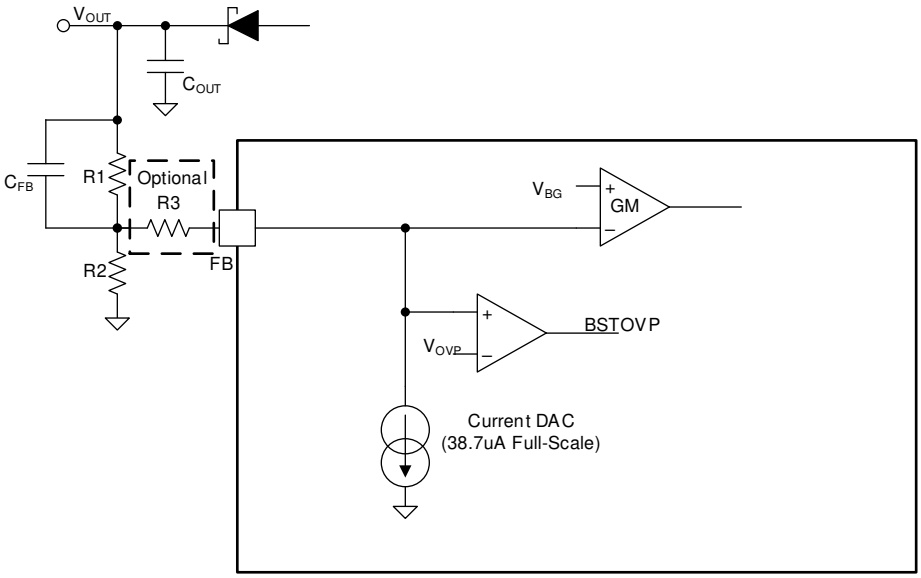

Figure 13. FB External Resistors With Capacitor When Operating With No Electrolytic Capacitor In Boost Output

8.3.2 Internal LDO

The internal LDO regulator converts the input voltage at VIN to a 4.3-V output voltage for internal use. Connect a minimum of 1-µF ceramic capacitor from LDO pin to ground, as close to the LDO pin as possible.

8.3.3 LED Current Sinks

8.3.3.1 LED Output Configuration

LP886x-Q1 detects LED output configuration during start-up. Any current sink output connected to ground is disabled and excluded from the adaptive voltage control of the DC-DC converter and fault detections.

If more current is needed, LP886x-Q1's output could also be connected together to support the high current LED.

8.3.3.2 LED Current Setting

The output current of the LED outputs is controlled with external R_{ISET} resistor. R_{ISET} value for the target LED current per channel can be calculated using Equation 5:

$$I_{LED} = 2000 \times \frac{V_{BG}}{R_{ISET}}$$

where

- V_{BG} = 1.2 V
- R_{ISET} is current setting resistor, kΩ
- I_{LED} is output current per OUTx pin, mA (5)

For example, if R_{ISET} is set to 20 kΩ, I_{LED} will be 120 mA per channel.

8.3.3.3 Brightness Control

LP886x-Q1 controls the brightness of the display with conventional PWM. Output PWM directly follows the input PWM. Input PWM frequency can be in the range of 100 Hz to 20 kHz.

8.3.4 Power-Line FET Control

The LP886x-Q1 has a power-line FET control feature. It has a control pin (SD) for driving the gate of an external power-line P-Channel MOSFET. This feature grants LP886x-Q1 the ability to immediately cut-off the power part of backlight system when failure occurs, protecting other parallel power systems from being impacted. In addition, the feature could smooth the inrush current during powering-up by turning on the power-line FET gradually. In SOFT START state, the SD pin slowly increases the sink current until it reaches 230 µA. An example schematic is shown in Figure 14.

The value of R_{GS} should follow the rules below

- $I_{SD_MAX} \times R_{GS}$ should be less than the power-line FET's maximum acceptable Source-Gate voltage
- $I_{SD_MIN} \times R_{GS}$ should be greater than the minimum power-line FET's Source-Gate voltage which could ensure a low On-State Resistance.

A 20-kΩ R_{GS} is chosen in typical application which generates a 4.6 V difference on power-line FET's Source-Gate voltage.

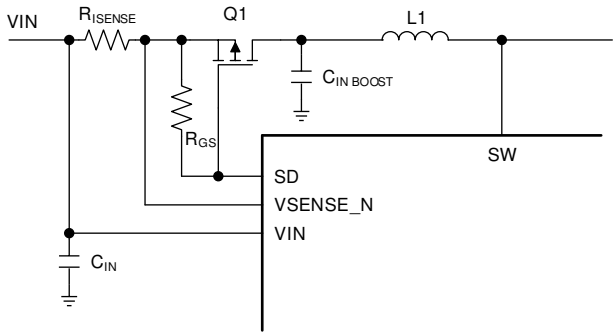

Figure 14. Power-Line FET Control Schematics

Copyright © 2019–2020, Texas Instruments Incorporated

The LP886x-Q1 turns off the power-line FET and prevents the possible boost and LEDs leakage when the device is disabled or in FAULT RECOVERY state.

Power-line FET control is an optional feature. Leave SD pin NC and don't use power-line FET when this feature is not needed.

8.3.5 LED Current Dimming With External Temperature Sensor

The LP886x-Q1 has an optional feature to decrease automatically LED current when LED overheating is detected with an external NTC sensor. An example of the behavior is shown in Figure 15. When the NTC temperature reaches T1, the LP886x-Q1 starts to decrease the LED current. When the LED current has reduced to 17.5% of the nominal value, current turns off until temperature returns to the operation range.

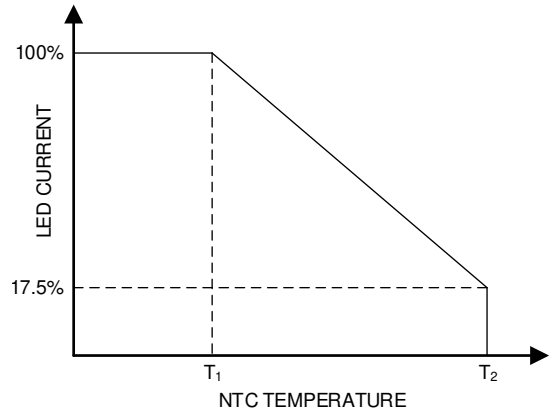

Figure 15. Temperature-Based LED Current Dimming Functionality

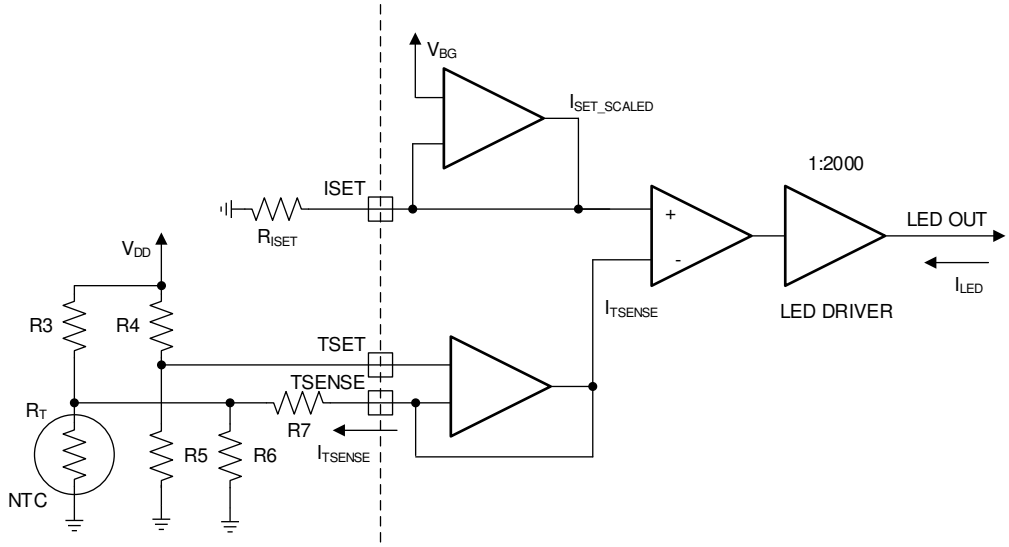

Figure 16. Temperature-Based LED Current Dimming Implementation

When TSET pin is grounded and TSENSE is floated, this feature is disabled. LED current is set by R_{ISET} resistor:

$$I_{LED} = 2000 \times \frac{V_{BG}}{R_{ISET}}$$

where

- V_{BG} = 1.2 V
- R_{ISET} is current setting resistor, kΩ
- I_{LED} is output current per OUTx pin, mA (6)

When external NTC is connected, the TSENSE pin current decreases LED output current. Temperature T1 and de-rate slope are defined by external resistors as explained below.

Parallel resistance of the NTC sensor RT and resistor R4 is calculated by formula:

$$R_{II} = \frac{R_T \times R6}{R_T + R6} \tag{7}$$

TSET voltage can be calculated with Equation 8:

$$V_{TSET} = V_{DD} \times \frac{R5}{R4 + R5} \tag{8}$$

TSENSE pin current is calculated by Equation 9:

$$I_{TSENSE} = \frac{V_{TSET} - V_{DD} \times \frac{R_{II}}{R_{II} + R3}}{R_{II} + R7 - \frac{R_{II}^2}{R_{II} + R3}} \tag{9}$$

where

- V_{DD} is the bias voltage of the resistor group. It's recommended to connect with chip's internal LDO output (pin 2)

ISET pin current defined by R_{ISET} is:

$$I_{SET_SCALED} = \frac{V_{BG}}{R_{ISET}} \tag{10}$$

For Equation 11, I_{TSENSE} current must be limited between 0 and I_{SET_SCALED}. If $I_{TSENSE} > I_{SET_SCALED}$ then set $I_{TSENSE} = I_{SET_SCALED}$. If $I_{TSENSE} < 0$ then set $I_{TSENSE} = 0$.

LED driver output current is:

$$I_{LED} = (I_{SET_SCALED} - I_{TSENSE}) \times 2\,000 \tag{11}$$

When current is lower than 17.5% of the nominal value, the current is set to 0 (the cut-off point).

An Excel® calculator is available for calculating the component values for a specific NTC and target thermal profile (contact *TI E2E™ support forums*). Figure 17 shows an example thermal profile implementation.

Copyright © 2019–2020, Texas Instruments Incorporated

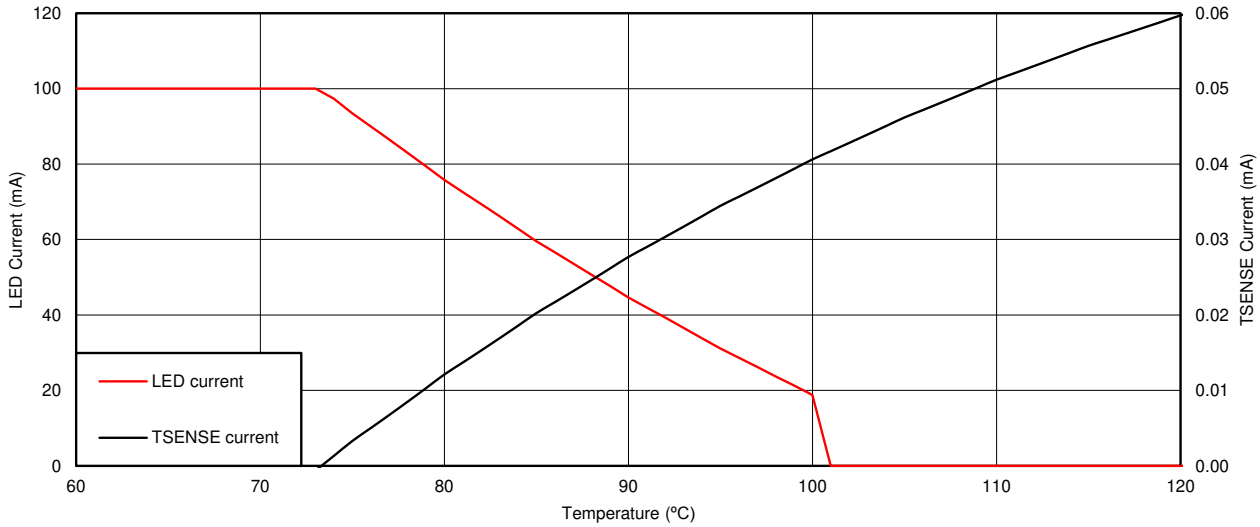

NTC – 10 kΩ at 25ºC	R_{ISET} = 24 kΩ	R2 = 10 kΩ	R4 = 100 kΩ
VDD = 4.3 V	R1 = 10 kΩ	R3 = 2 kΩ	R5 = 7.5 kΩ

Figure 17. Calculation Example

8.3.6 Fault Detections and Protection

The LP886x-Q1 has fault detection for LED open and short, VIN input overvoltage protection (VIN_OVP) , VIN undervoltage protection (VIN_UVLO), VIN overcurrent protection (VIN_OCP) , Boost output overvoltage protection (BST_OVP), SW overvoltage protection (SW_OVP) and thermal shutdown (TSD).

8.3.6.1 Supply Fault and Protection

8.3.6.1.1 VIN Undervoltage Fault (VIN_UVLO)

The LP886x-Q1 device supports VIN undervoltage protection. The VIN undervoltage falling threshold is 3.85-V typical and rising threshold is 4-V typical. If during operation of the LP886x-Q1 device, the VIN pin voltage falls below the VIN undervoltage falling threshold, the boost, LED outputs, and power-line FET will be turned off, and the device will enter FAULT RECOVERY mode. The FAULT pin will be pulled low. The LP886x-Q1 will exit FAULT RECOVERY mode after 100 ms and try the start-up sequence again. VIN_UVLO fault detection is available in SOFT START, BOOST START, and NORMAL state.

8.3.6.1.2 VIN Overvoltage Fault (VIN_OVP)

The LP886x-Q1 device supports VIN overvoltage protection. The VIN overvoltage threshold is 43-V typical. If during LP886x-Q1 operation, VIN pin voltage rises above the VIN overvoltage threshold, the boost, LED outputs and the power-line FET will be turned off, and the device will enter FAULT RECOVERY mode. The FAULT pin will be pulled low. The LP886x-Q1 will exit FAULT RECOVERY mode after 100 ms and try the start-up sequence again. VIN_OVP fault detection is available in SOFT START, BOOST START and NORMAL state.

8.3.6.1.3 VIN Overcurrent Fault (VIN_OCP)

The LP886x-Q1 device supports VIN overcurrent protection. If during LP886x-Q1 operation, voltage drop between VIN pin and VSENSE_N pin rises above 160-mV typical, the boost, LED outputs and the power-line FET will be turned off, and the device will enter FAULT RECOVERY mode. The FAULT pin will be pulled low. The LP886x-Q1 will exit FAULT RECOVERY mode after 100 ms and try the start-up sequence again. VIN_OCP fault detection is available in SOFT START, BOOST START, and NORMAL state.

A 30-mΩ resistor is recommended to put between VIN pin and VSENSE_N pin, which will set the VIN overcurrent threshold to 5.3 A.

8.3.6.2 Boost Fault and Protection

8.3.6.2.1 Boost Overvoltage Fault (BST_OVP)

The LP886x-Q1 device supports boost overvoltage protection. If during LP886x-Q1 operation, the FB pin voltage exceeds the V_{FB_OVP} threshold, which is 2.3-V typical, the boost, LED outputs and the power-line FET will be turned off, and the device will enter FAULT RECOVERY mode. The FAULT pin will be pulled low. The LP886x-Q1 will exit FAULT RECOVERY mode after 100 ms and try the start-up sequence again. BST_OVP fault detection is available in NORMAL state.

Calculating back from FB pin voltage threshold to boost output OVP voltage threshold, the value is not a static threshold, but a dynamic threshold changing with the current target boost adaptive voltage:

$$V_{BOOST_OVP} = V_{BOOST} + \left(\frac{R1}{R2} + 1\right) \times (V_{FB_OVP} - V_{BG}) \quad (12)$$

where

- V_{BOOST} is the current target boost adaptive voltage, which in most time is the current largest LED string forward voltage among multiple strings + 0.9 V in steady state
- V_{FB_OVP} = 2.3 V
- V_{BG} = 1.2 V
- R_1 and R_2 is the resistor value of FB external network in *Using Two-Divider* and *Using T-Divider*

For example, if R_1 is set to 750 kΩ and R_2 is set to 130 kΩ, V_{BOOST} will report OVP when the boost voltage is 7.4 V above target boost voltage.

This equation holds true in both two-divider FB external network and T-divider FB external network.

8.3.6.2.2 SW Overvoltage Fault (SW_OVP)

Besides boost overvoltage protection, the LP886x-Q1 supports SW pin overvoltage protection to further protect the boost system from overvoltage scenario. If during LP886x-Q1 operation, the SW pin voltage exceeds the V_{SW_OVP} threshold, which is 49-V typical, the boost, LED outputs and the power-line FET are turned off, and the device will enter FAULT RECOVERY mode. The FAULT pin will be pulled low. The LP886x-Q1 will exit FAULT RECOVERY mode after 100 ms and try the start-up sequence again. SW_OVP fault detection is available in SOFT START, BOOST START and NORMAL state.

8.3.6.3 LED Fault and Protection (LED_OPEN and LED_SHORT)

Every LED current sink has 3 comparators for LED fault detections.

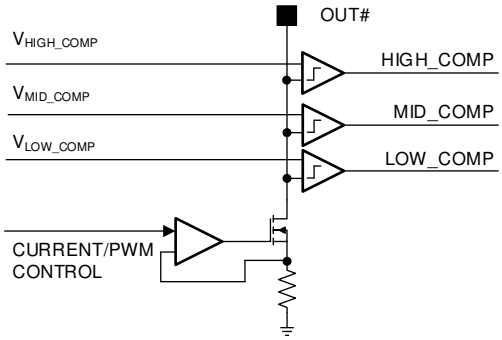

Figure 18. Comparators for LED Fault Detection

Figure 19 shows cases which generates LED faults. Any LED faults will pull the Fault pin low.

During normal operation, boost voltage is raised if any of the used LED outputs falls below the V_{LOW_COMP} threshold. Open LED fault is detected if boost output voltage has reached the maximum and at least one LED output is still below the threshold. The open string is then disconnected from the boost adaptive control loop and its output is disabled.

Copyright © 2019–2020, Texas Instruments Incorporated

Shorted LED fault is detected if one or more LED outputs are above the V_{HIGH_COMP} threshold (typical 6 V) and at least one LED output is inside the normal operation window (between V_{LOW_COMP} and V_{MID_COMP}, typical 0.9 V and 1.9 V). The shorted string is disconnected from the boost adaptive control loop and its output is disabled.

LED Open fault detection and LED Short fault detection are available only in NORMAL state.

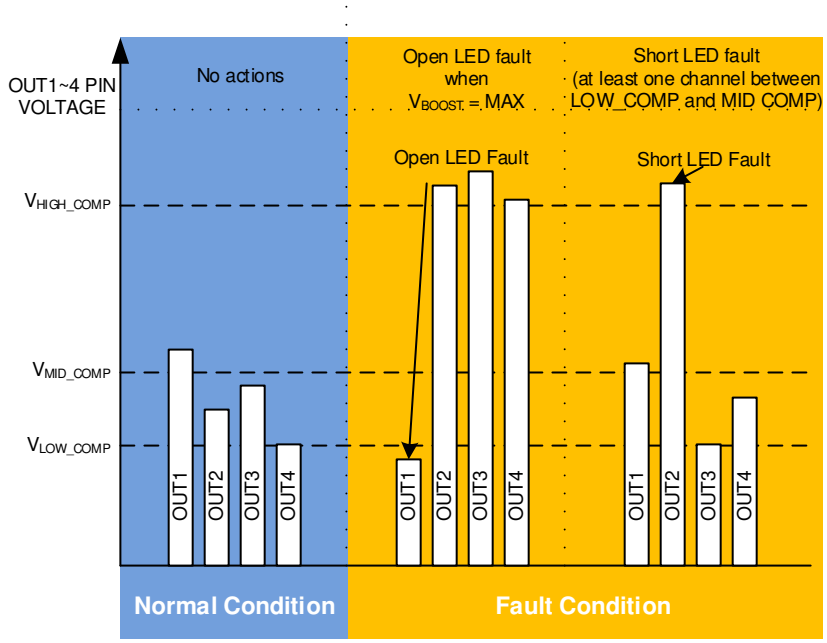

Figure 19. Protection and DC-DC Voltage Adaptation Algorithms

If LED fault is detected, the device continues normal operation and only the faulty string is disabled. The fault is indicated via the FAULT pin which can be released by toggling VDDIO/EN pin low for a short period of 2 µs to 20 µs. LEDs are turned off for this period but the device stays in NORMAL state. If VDDIO/EN is low longer, the device goes to STANDBY and restarts when EN goes high again.

This means if the system doesn't want to simply disable the device because of LED faults. It could clear the LED faults by toggling VDDIO/EN pin low for a short period of 2 µs to 20 µs.

8.3.6.4 Thermal Fault and Protection (TSD)

If the die temperature of LP886x-Q1 reaches the thermal shutdown threshold T_{TSD}, which is 165°C typical, the boost, power-line FET and LED outputs are turned off to protect the device from damage. The FAULT pin will be pulled low. The LP886x-Q1 will exit FAULT RECOVERY mode after 100 ms and try the start-up sequence again. Only if the die temperature drops lower than T_{TSD} - T_{TSD_HYS}, which is 145°C typical, the device could start-up normally. TSD fault detection is available in SOFT START, BOOST START and NORMAL state.

8.3.6.5 Overview of the Fault and Protection Schemes

A summary of the LP886x-Q1 fault detection behavior is shown in Table 3. Detected faults (excluding LED open or short) cause device to enter FAULT RECOVERY state. In FAULT_RECOVERY the DC-DC and LED current sinks of the device are disabled, and the FAULT pin is pulled low. The device will exit FAULT RECOVERY mode after 100 ms and try the start-up sequence again. When recovery is successful and device enters into NORMAL state, the FAULT pin is released high.

Table 3. Fault Detections

FAULT/ PROTECTION	FAULT NAME	CONDITION	FAULT PIN	Enter FAULT_ RECOVERY STATE	ACTIVE STATE	ACTION
VIN overvoltage protection	VIN_OVP	VIN > 43 V	Yes	Yes	SOFT START, BOOST START, NORMAL	Device enters into FAULT RECOVERY state, and restarts after 100 ms
VIN undervoltage protection	VIN_UVLO	Effective when VIN < 3.85 V Released when VIN >4 V	Yes	Yes	SOFT START, BOOST START, NORMAL	Device enters into FAULT RECOVERY state, and restarts after 100 ms
VIN overcurrent protection	VIN_OCP	VIN-VSENSE_N > 160mV	Yes	Yes	SOFT START, BOOST START, NORMAL	Device enters into FAULT RECOVERY state, and restarts after 100 ms
Open LED fault	LED _OPEN	Adaptive Voltage is max. and any OUTx voltage < 0.9 V	Yes	No	NORMAL	Open string is removed from the DC-DC voltage control loop and output is disabled. Fault pin low could be released by toggling VDDIO/EN pin, If VDDIO/EN is low for a period of 2 µs to 20 µs, LEDs are turned off for this period but device stays in NORMAL.
Shorted LED fault	LED_SHORT	One of OUTx voltage is [0.9 V, 1.9 V] and any OUTx voltage > 6 V	Yes	No	NORMAL	Short string is removed from the DC-DC voltage control loop and output is disabled. Fault pin low could be released by toggling VDDIO/EN pin, If VDDIO/EN is low for a period of 2 µs to 20 µs, LEDs are turned off for this period but device stays NORMAL.
Boost overvoltage protection	BST_OVP	V_{FB} > 2.3 V	Yes	Yes	NORMAL	Fault is detected if boost overvoltage condition duration is more than 560 ms Device enters into FAULT RECOVERY state, and restarts after 100 ms
SW overvoltage protection	SW_OVP	V_{SW} > 49 V	Yes	Yes	SOFT START, BOOST START, NORMAL	Device enters into FAULT RECOVERY state, and restarts after 100 ms
Thermal protection	TSD	Effective when Tj > 165 ºC Released when Tj < 145 ºC	Yes	Yes	SOFT START, BOOST START, NORMAL	Device enters into FAULT RECOVERY state, and restarts until TSD fault is released

Copyright © 2019–2020, Texas Instruments Incorporated

8.4 Device Functional Modes

8.4.1 STANDBY State

The LP886x-Q1 enters STANDBY state when the VIN voltage powers on and voltage is higher than VINUVLO rising threshold, which is 4-V typical. In STANDBY state, the device is able to detect VDDIO/EN signal. When VDDIO/EN is pulled high, the internal LDO wakes up and the device enters into SOFT START state. The device will re-enter the STANDBY state when VDDIO/EN is pulled low for more than 50 µs.

8.4.2 SOFT START State

In SOFT START state, Power-line FET is enabled, and boost input and output capacitors are charged to VIN level. VIN_OCP, VIN_OVP, VIN_UVLO, SW_OVP and TSD fault are active. After 65 ms, the device enters into BOOST START state.

8.4.3 BOOST START State

In BOOST START state, DC-DC controller is turned on and boost voltage is ramped to initial boost voltage level with reduced current limit. VIN_OCP, VIN_OVP, VIN_UVLO, SW_OVP and TSD fault are active in this state. After 50 ms, LED outputs do a one-time detection on grounded outputs. Grounded outputs are disabled and excluded from the adaptive voltage control loop. Then the device enters into NORMAL state.

8.4.4 NORMAL State

In NORMAL state, LED drivers are enabled when PWM signal is high. All faults are active in this state. Fault pin will be released high in the start of NORMAL state if recovering from FAULT RECOVERY state and no fault is available.

8.4.5 FAULT RECOVERY State

Non-LED faults can trigger fault recovery state. LED drivers, boost converter and power-line FET are all disabled. After 100 ms, the device attempts to restart from SOFT START state if VDDIO/EN is still high.

8.4.6 State Diagram and Timing Diagram for Start-up and Shutdown

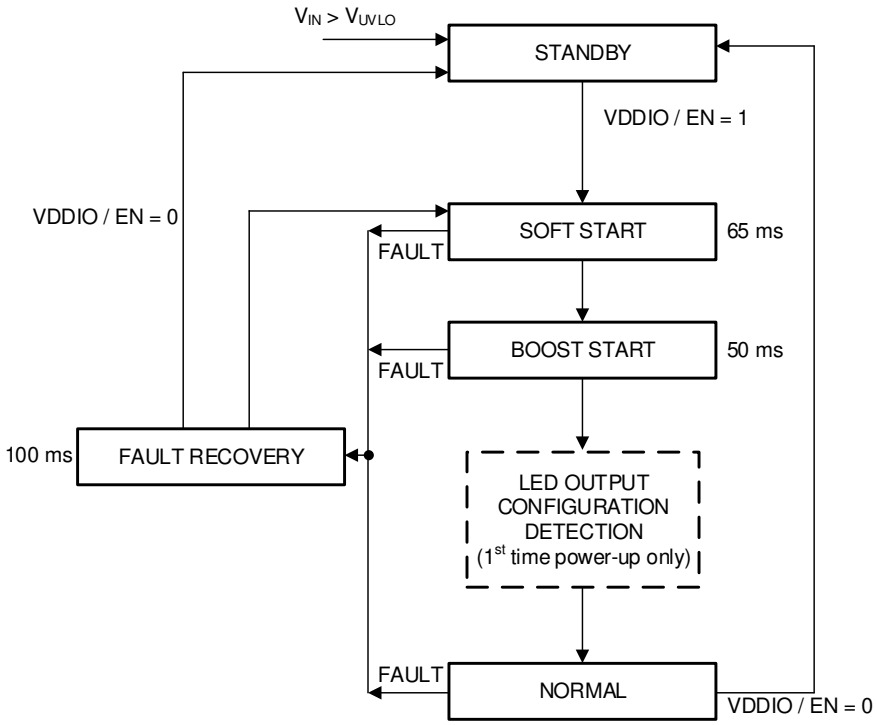

Figure 20. State Diagram

Device Functional Modes (continued)

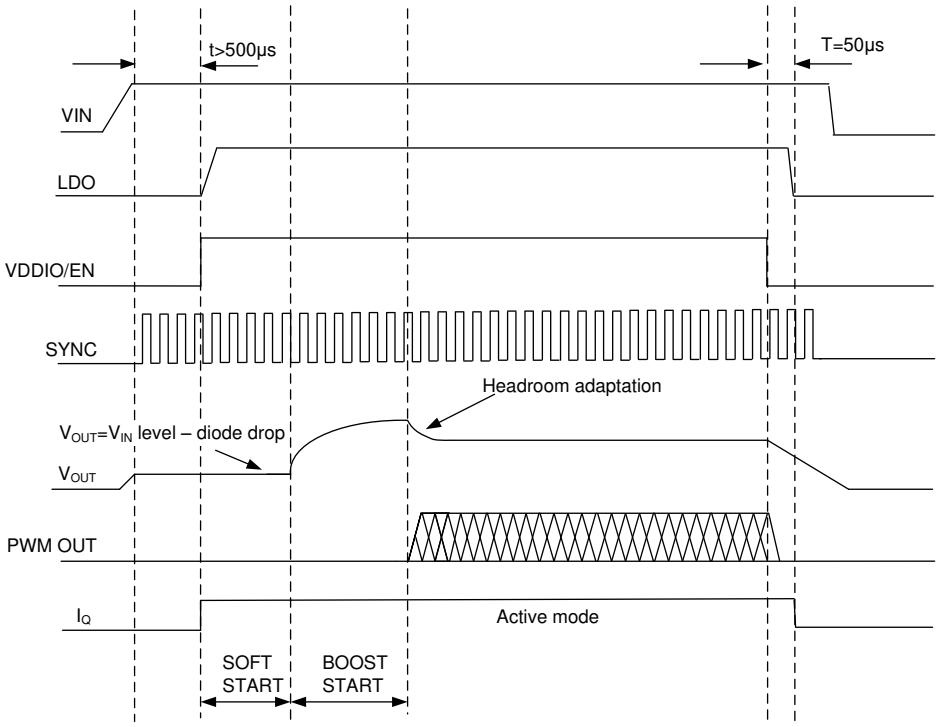

Figure 21. Timing Diagram for the Typical Start-Up and Shutdown

Copyright © 2019–2020, Texas Instruments Incorporated

9 Application and Implementation

NOTE

Information in the following applications sections is not part of the TI component specification, and TI does not warrant its accuracy or completeness. TI's customers are responsible for determining suitability of components for their purposes. Customers should validate and test their design implementation to confirm system functionality.

9.1 Application Information

The LP886x-Q1 is designed for automotive applications. The input voltage (V_{IN}) is intended to be connected to the automotive battery, which supports voltage range from 4.5 V to 40 V. Device internal circuitry is powered from the integrated LDO.

The LP886x-Q1 uses a simple four-wire control:

- VDDIO/EN for enable
- PWM input for brightness control
- SYNC pin for boost synchronisation (optional)
- FAULT output to indicate fault condition (optional)

9.2 Typical Applications

9.2.1 Typical Application for 4 LED Strings

Figure 22 shows the typical application for LP886x-Q1 which supports 4 LED strings, 100 mA per string with a boost switching frequency of 400 kHz.

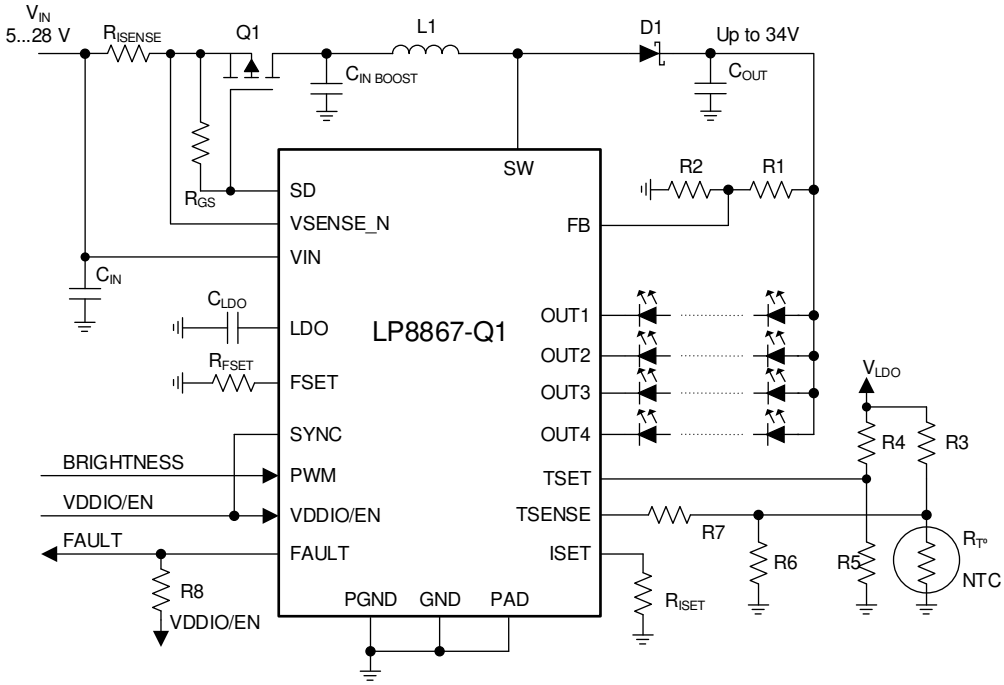

Figure 22. Four Strings 100 mA per String Configuration

Typical Applications (continued)

9.2.2 Design Requirements

Table 4. Design Requirements Table

DESIGN PARAMETER	VALUE
V_{IN} voltage range	5 V – 28 V
LED string	4P8S LEDs (30 V max)
LED string current	100 mA
Maximum boost voltage	34 V
Boost switching frequency	400 kHz
External boost sync	not used
Boost spread spectrum	enabled
L1	33 µH
C_{IN}	100 µF, 50 V
$C_{IN\ BOOST}$	2 × (10 µF, 50-V ceramic) + 33 µF, 50-V electrolytic
C_{OUT}	2 × (10 µF, 50-V ceramic) + 33 µF, 50-V electrolytic
C_{LDO}	1 µF, 10 V
R_{ISET}	24 kΩ
R_{FSET}	160 kΩ
R1	685 kΩ
R2	130 kΩ
R8	10 kΩ

9.2.3 Detailed Design Procedure

9.2.3.1 Inductor Selection

There are two main considerations when choosing an inductor; the inductor must not saturate, and the inductor current ripple must be small enough to achieve the desired output voltage ripple. Different saturation current rating specifications are followed by different manufacturers so attention must be given to details. Saturation current ratings are typically specified at 25°C. However, ratings at the maximum ambient temperature of application should be requested from the manufacturer. Shielded inductors radiate less noise and are preferred. The saturation current must be greater than the sum of the maximum load current, and the worst case average-to-peak inductor current. Equation 13 shows the worst case conditions

$$I_{SAT} > \frac{I_{OUTMAX}}{D'} + I_{RIPPLE} \quad \text{For Boost}$$

$$\text{Where } I_{RIPPLE} = \frac{(V_{OUT} - V_{IN})}{(2 \times L \times f)} \times \frac{V_{IN}}{V_{OUT}}$$

$$\text{Where } D = \frac{(V_{OUT} - V_{IN})}{(V_{OUT})} \text{ and } D' = (1 - D)$$

- I_{RIPPLE} - peak inductor current
- I_{OUTMAX} - maximum load current
- V_{IN} - minimum input voltage in application
- L - min inductor value including worst case tolerances
- f - minimum switching frequency
- V_{OUT} - output voltage
- D - Duty Cycle for CCM Operation (13)

As a result, the inductor should be selected according to the I_{SAT}. A more conservative and recommended approach is to choose an inductor that has a saturation current rating greater than the maximum current limit. A saturation current rating of at least 4.1 A is recommended for most applications. See Table 2 for recommended inductance value for the different switching frequency ranges. The inductor's resistance should be less than 300 mΩ for good efficiency.

Copyright © 2019–2020, Texas Instruments Incorporated

See detailed information in *Understanding Boost Power Stages in Switch Mode Power Supplies*. *Power Stage Desinger Tool* can be used for the boost calculation.

9.2.3.2 Output Capacitor Selection

A ceramic capacitor with 2 × $V_{MAX\ BOOST}$ or more voltage rating is recommended for the output capacitor. The DC-bias effect can reduce the effective capacitance by up to 80%, which needs to be considered in capacitance value selection. If the selected ceramic capacitors' voltage rating is less than 2 × $V_{MAX\ BOOST}$, an alternative way is to increase the number of ceramic capacitors. Capacitance recommendations for different switching frequencies are shown in Table 2. To minimize audible noise of ceramic capacitors their physical size should typically be minimized.

9.2.3.3 Input Capacitor Selection

A ceramic capacitor with 2 × $V_{IN\ MAX}$ or more voltage rating is recommended for the input capacitor. The DC-bias effect can reduce the effective capacitance by up to 80%, which needs to be considered in capacitance value selection. If the selected ceramic capacitors' voltage rating is less than 2 × $V_{MAX\ BOOST}$, an alternative way is to increase the number of ceramic capacitors. Capacitance recommendations for different boost switching frequencies are shown in Table 2.

9.2.3.4 LDO Output Capacitor

A ceramic capacitor with at least 10-V voltage rating is recommended for the output capacitor of the LDO. The DC-bias effect can reduce the effective capacitance by up to 80%, which needs to be considered in capacitance value selection. Typically a 1-µF capacitor is sufficient.

9.2.3.5 Diode

A Schottky diode should be used for the boost output diode. Do not use ordinary rectifier diodes, because slow switching speeds and long recovery times degrade the efficiency and the load regulation. Diode rating for peak repetitive current should be greater than inductor peak current (up to 4.1 A) to ensure reliable operation in boost mode. Average current rating should be greater than the maximum output current. Schottky diodes with a low forward drop and fast switching speeds are ideal for increasing efficiency. Choose a reverse breakdown voltage of the Schottky diode significantly larger than the output voltage. The junction capacitance of Schottky diodes are also very important. Big junction capacitance leads to huge reverse current and big noise when boost is switching. A <500-pF junction capacitance at V_R= 0.1 V Schottky diode is recommended.

9.2.4 Application Curves

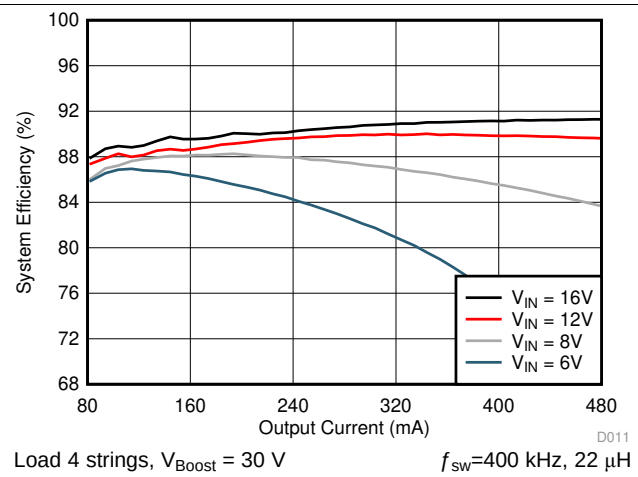

Figure 23. LED Backlight Efficiency

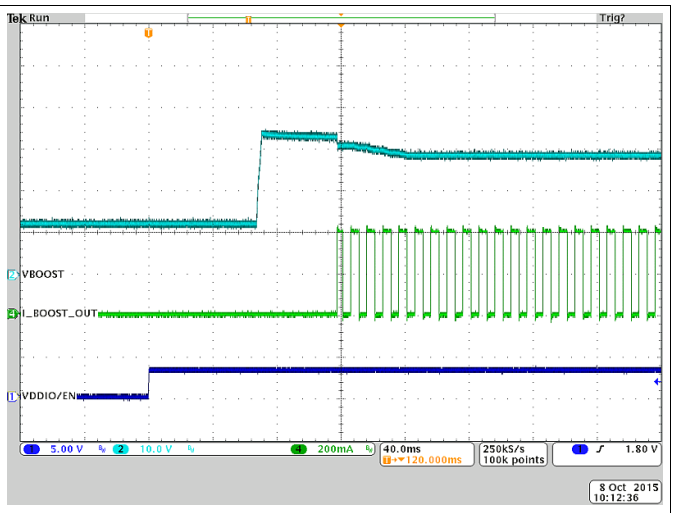

Figure 24. Typical Start-Up

9.2.5 SEPIC Mode Application

When LED string voltage can be above or below V_{IN} voltage, SEPIC configuration can be used. In this example, two separate coils or coupled coil could both be used for SEPIC. Separate coils can enable lower height external components to be used, compared to a coupled coil solution. On the other hand, coupled coil typically maximizes the efficiency. Also, in this example, an external clock is used to synchronize SEPIC switching frequency. External clock input can be modulated to spread switching frequency spectrum.

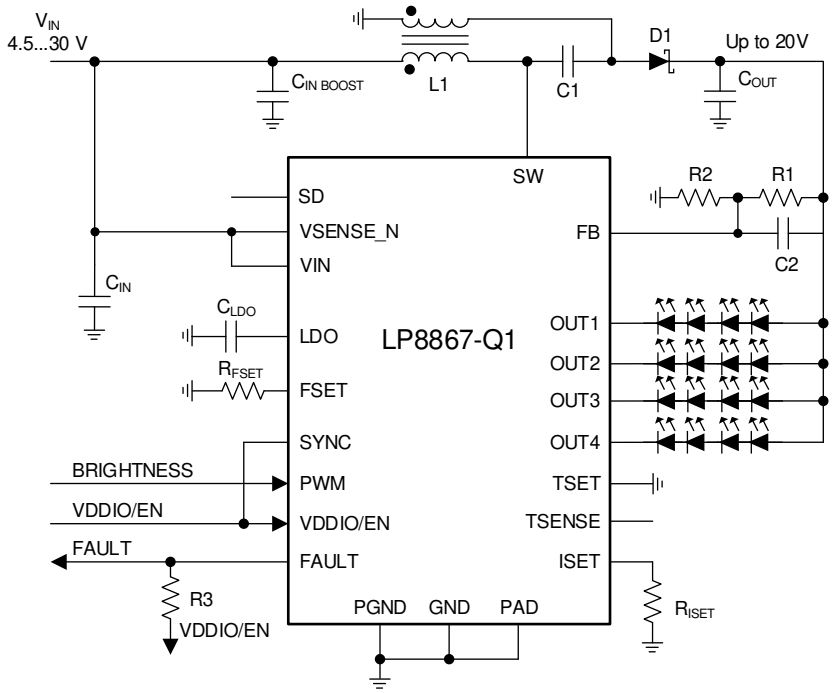

Figure 25. SEPIC Mode, 4 Strings 100-mA per String Configuration

Copyright © 2019–2020, Texas Instruments Incorporated

9.2.5.1 Design Requirements

Table 5. Design Requirements Table

DESIGN PARAMETER	VALUE
V_{IN} voltage range	4.5 V – 30 V
LED string	4P4S LEDs (15 V max)
LED string current	100 mA
Maxmum output voltage	20 V
SEPIC switching frequency	2.2 MHz
External sync for SEPIC	used
Spread spectrum	Internal spread spectrum disabled (external sync used)
L1, L2	4.7 µH
C_{IN}	10 µF 50 V
$C_{IN\ SEPIC}$	2 × 10 µF, 50-V ceramic + 33 µF, 50-V electrolytic
C1	10-µF 50-V ceramic
C2	30 pF
C_{OUT}	2 × 10 µF, 50-V ceramic + 33 µF, 50-V electrolytic
C_{LDO}	1 µF, 10 V
R_{ISET}	24 kΩ
R_{FSET}	24 kΩ
R1	265 kΩ
R2	37 kΩ
R3	10 kΩ

9.2.5.2 Detailed Design Procedure

In SEPIC mode the maximum voltage at the SW pin is equal to the sum of the input voltage and the output voltage. Because of this, the maximum sum of input and output voltage must be limited below 49 V. See the *Detailed Design Procedure* section for general external component guidelines. Main differences of SEPIC compared to boost are described below.

Power Stage Designer™ Tool can be used for modeling SEPIC behavior. For detailed explanation on SEPIC see Texas Instruments Analog Applications Journal *Designing DC/DC Converters Based on SEPIC Topology*.

9.2.5.2.1 Inductor

In SEPIC mode, currents flowing through the coupled inductors or the two separate inductors L1 and L2 are the input current and output current, respectively. Values can be calculated using *Power Stage Designer™ Tool* or using equations in *Designing DC/DC Converters Based on SEPIC Topology*.

9.2.5.2.2 Diode

In SEPIC mode diode peak current is equal to the sum of input and output currents. Diode rating for peak repetitive current should be greater than SW pin current limit (up to 4.1 A for transients) to ensure reliable operation in boost mode. Average current rating should be greater than the maximum output current. Diode voltage rating must be higher than sum of input and output voltages.

9.2.5.2.3 Capacitor C1

TI recommends a ceramic capacitor with low ESR. Capacitor voltage rating must be higher than maximum input voltage.

9.2.5.3 Application Curves

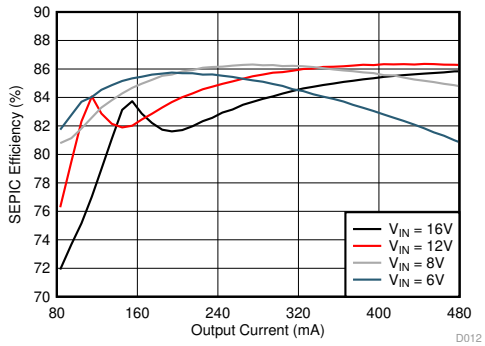

4 strings, 4 LEDs per string
f_{sw} = 2.2 MHz
IHCL-4040DZ-5A 4.7 µH

Figure 26. SEPIC Efficiency

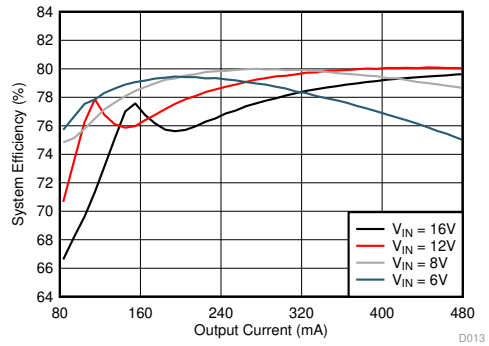

4 strings, 4LEDs per string
f_{sw} = 2.2 MHz
IHCL-4040DZ-5A 4.7 µH

Figure 27. LED Backlight Efficiency

10 Power Supply Recommendations

The device is designed to operate from an automotive battery. Device should be protected from reversal voltage and voltage dump over 50 V. The resistance of the input supply rail must be low enough so that the input current transient does not cause a high drop at LP886x-Q1 VIN pin. If the input supply is connected by using long wires, additional bulk capacitance may be required in addition to the ceramic bypass capacitors in the V_{IN} line.

11 Layout

11.1 Layout Guidelines

Figure 28 is a layout recommendation for LP886x-Q1 used to demonstrate the principles of a good layout. This layout can be adapted to the actual application layout if or where possible. It is important that all boost components are close to the chip, and the high current traces must be wide enough. By placing boost components on one side of the chip it is easy to keep the ground plane intact below the high current paths. This way other chip pins can be routed more easily without splitting the ground plane. Bypass LDO capacitor must be placed as close as possible to the device.

Here are some main points to help the PCB layout work:

- Current loops need to be minimized:
  - For low frequency the minimal current loop can be achieved by placing the boost components as close as possible to the SW and PGND pins. Input and output capacitor grounds must be close to each other to minimize current loop size.
  - Minimal current loops for high frequencies can be achieved by making sure that the ground plane is intact under the current traces. High-frequency return currents find a route with minimum impedance, which is the route with minimum loop area, not necessarily the shortest path. Minimum loop area is formed when return current flows just under the **positive** current route in the ground plane, if the ground plane is intact under the route. To minimize the current loop for high frequencies:
    - Inductor's pin in SW node needs to be as near as possible to chip's SW pin
    - Put a small capacitor as near as possible to the diode's pin in boost output node and arrange vias to PGND plane close to the capacitor's GND pin.
- Use separate power and noise-free grounds. PGND is used for boost converter return current and noise-free ground is used for more sensitive signals, such as LDO bypass capacitor grounding as well as grounding the GND pin of the device.
- Boost output feedback voltage to LEDs must be taken out *after* the output capacitors, not straight from the diode cathode.
- Place LDO 1-µF bypass capacitor as close as possible to the LDO pin.

Copyright © 2019–2020, Texas Instruments Incorporated

Layout Guidelines (continued)

- Input and output capacitors require strong grounding (wide traces, many vias to GND plane).

11.2 Layout Example

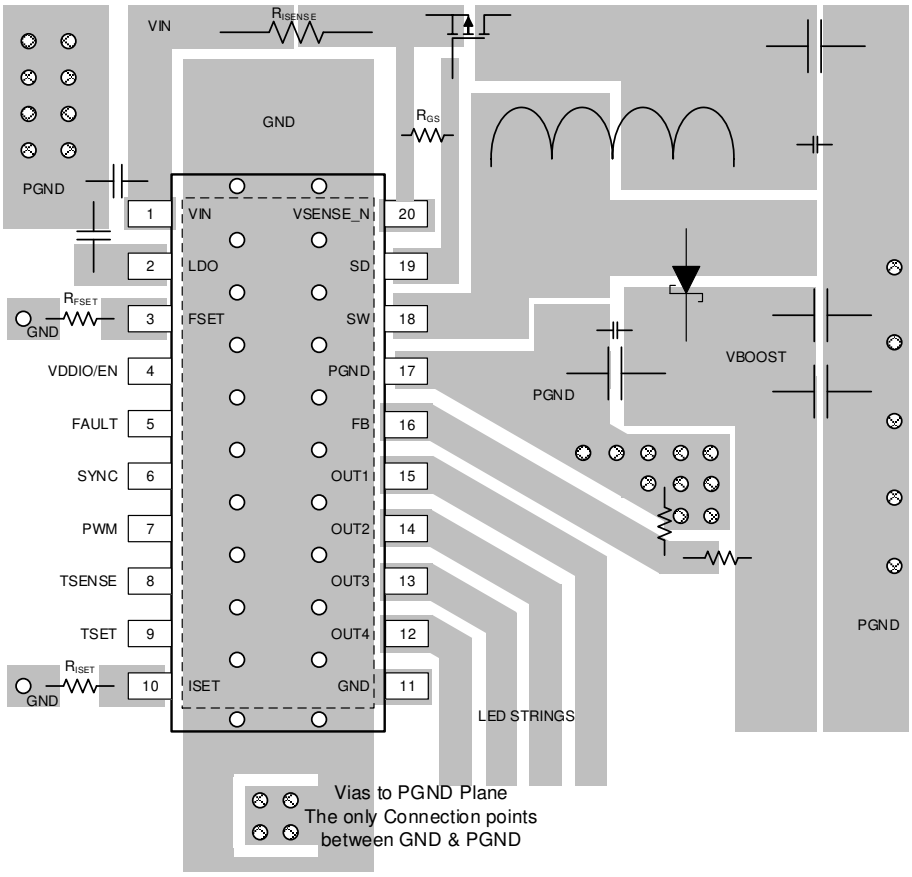

Figure 28. LP886x-Q1 Boost Layout

12 Device and Documentation Support

12.1 Device Support

12.1.1 Development Support

Power Stage Designer™ Tool can be used for both boost and SEPIC: *Power Stage Designer™ Tool*

12.2 Documentation Support

12.2.1 Related Documentation

For related documentation see the following:

- *PowerPAD™ Thermally Enhanced Package*
- *Understanding Boost Power Stages in Switch Mode Power Supplies*
- *Designing DC-DC Converters Based on SEPIC Topology*
- *TI E2E™ support forums*

12.3 Receiving Notification of Documentation Updates

To receive notification of documentation updates, navigate to the device product folder on ti.com. In the upper right corner, click on *Alert me* to register and receive a weekly digest of any product information that has changed. For change details, review the revision history included in any revised document.

12.4 Community Resources

TI E2E™ support forums are an engineer's go-to source for fast, verified answers and design help — straight from the experts. Search existing answers or ask your own question to get the quick design help you need.

Linked content is provided "AS IS" by the respective contributors. They do not constitute TI specifications and do not necessarily reflect TI's views; see TI's Terms of Use.

12.5 Trademarks

Power Stage Designer, E2E are trademarks of Texas Instruments.
Excel is a registered trademark of Microsoft Corporation.
All other trademarks are the property of their respective owners.

12.6 Electrostatic Discharge Caution

These devices have limited built-in ESD protection. The leads should be shorted together or the device placed in conductive foam during storage or handling to prevent electrostatic damage to the MOS gates.

12.7 Glossary

SLYZ022 — *TI Glossary*.

This glossary lists and explains terms, acronyms, and definitions.

13 Mechanical, Packaging, and Orderable Information

The following pages include mechanical, packaging, and orderable information. This information is the most current data available for the designated devices. This data is subject to change without notice and revision of this document. For browser-based versions of this data sheet, refer to the left-hand navigation.

Copyright © 2019–2020, Texas Instruments Incorporated

PACKAGING INFORMATION

Orderable part number	Status (1)	Material type (2)	Package | Pins	Package qty | Carrier	RoHS (3)	Lead finish/ Ball material (4)	MSL rating/ Peak reflow (5)	Op temp (°C)	Part marking (6)
LP8867QPWPRQ1	Active	Production	HTSSOP (PWP) | 20	2000 | LARGE T&R	Yes	NIPDAU	Level-2-260C-1 YEAR	-40 to 125	8867Q
LP8867QPWPRQ1.A	Active	Production	HTSSOP (PWP) | 20	2000 | LARGE T&R	Yes	NIPDAU	Level-2-260C-1 YEAR	-40 to 125	8867Q
LP8869QPWPRQ1	Active	Production	HTSSOP (PWP) | 20	2000 | LARGE T&R	Yes	NIPDAU	Level-2-260C-1 YEAR	-40 to 125	8869Q
LP8869QPWPRQ1.A	Active	Production	HTSSOP (PWP) | 20	2000 | LARGE T&R	Yes	NIPDAU	Level-2-260C-1 YEAR	-40 to 125	8869Q

(1) **Status:** For more details on status, see our product life cycle.

(2) **Material type:** When designated, preproduction parts are prototypes/experimental devices, and are not yet approved or released for full production. Testing and final process, including without limitation quality assurance, reliability performance testing, and/or process qualification, may not yet be complete, and this item is subject to further changes or possible discontinuation. If available for ordering, purchases will be subject to an additional waiver at checkout, and are intended for early internal evaluation purposes only. These items are sold without warranties of any kind.

(3) **RoHS values:** Yes, No, RoHS Exempt. See the TI RoHS Statement for additional information and value definition.

(4) **Lead finish/Ball material:** Parts may have multiple material finish options. Finish options are separated by a vertical ruled line. Lead finish/Ball material values may wrap to two lines if the finish value exceeds the maximum column width.

(5) **MSL rating/Peak reflow:** The moisture sensitivity level ratings and peak solder (reflow) temperatures. In the event that a part has multiple moisture sensitivity ratings, only the lowest level per JEDEC standards is shown. Refer to the shipping label for the actual reflow temperature that will be used to mount the part to the printed circuit board.

(6) **Part marking:** There may be an additional marking, which relates to the logo, the lot trace code information, or the environmental category of the part.

Multiple part markings will be inside parentheses. Only one part marking contained in parentheses and separated by a "~" will appear on a part. If a line is indented then it is a continuation of the previous line and the two combined represent the entire part marking for that device.

Important Information and Disclaimer: The information provided on this page represents TI's knowledge and belief as of the date that it is provided. TI bases its knowledge and belief on information provided by third parties, and makes no representation or warranty as to the accuracy of such information. Efforts are underway to better integrate information from third parties. TI has taken and continues to take reasonable steps to provide representative and accurate information but may not have conducted destructive testing or chemical analysis on incoming materials and chemicals. TI and TI suppliers consider certain information to be proprietary, and thus CAS numbers and other limited information may not be available for release.

In no event shall TI's liability arising out of such information exceed the total purchase price of the TI part(s) at issue in this document sold by TI to Customer on an annual basis.

TAPE AND REEL INFORMATION

REEL DIMENSIONS

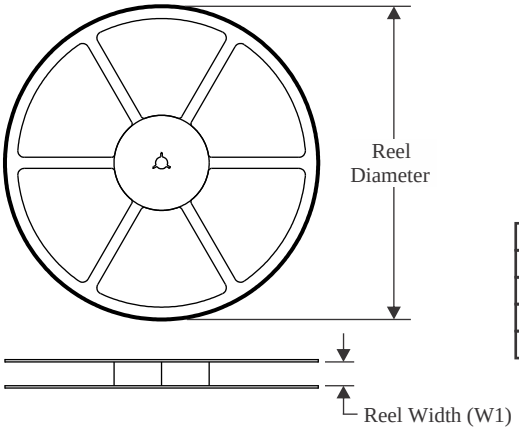

TAPE DIMENSIONS

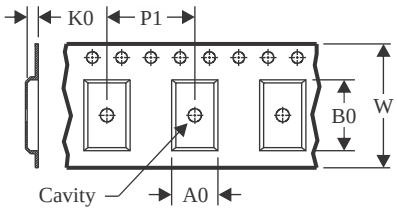

A0	Dimension designed to accommodate the component width
B0	Dimension designed to accommodate the component length
K0	Dimension designed to accommodate the component thickness
W	Overall width of the carrier tape
P1	Pitch between successive cavity centers

QUADRANT ASSIGNMENTS FOR PIN 1 ORIENTATION IN TAPE

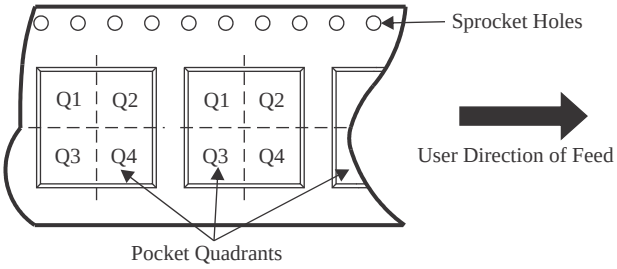

*All dimensions are nominal

Device	Package Type	Package Drawing	Pins	SPQ	Reel Diameter (mm)	Reel Width W1 (mm)	A0 (mm)	B0 (mm)	K0 (mm)	P1 (mm)	W (mm)	Pin1 Quadrant
LP8867QPWPRQ1	HTSSOP	PWP	20	2000	330.0	16.4	6.95	7.1	1.6	8.0	16.0	Q1
LP8869QPWPRQ1	HTSSOP	PWP	20	2000	330.0	16.4	6.95	7.0	1.4	8.0	16.0	Q1

TAPE AND REEL BOX DIMENSIONS

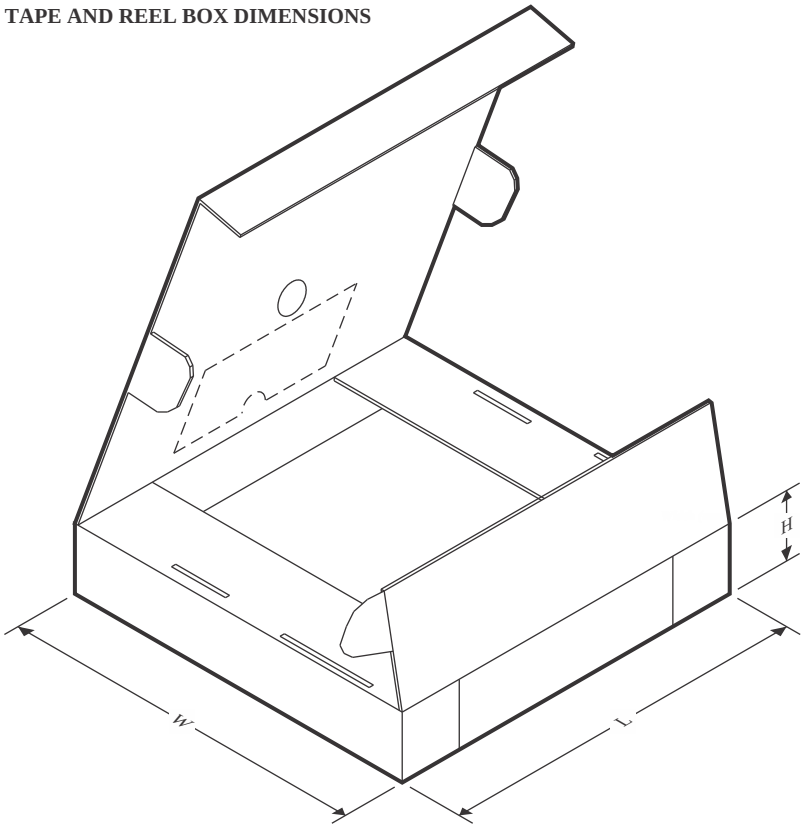

*All dimensions are nominal

Device	Package Type	Package Drawing	Pins	SPQ	Length (mm)	Width (mm)	Height (mm)
LP8867QPWPRQ1	HTSSOP	PWP	20	2000	350.0	350.0	43.0
LP8869QPWPRQ1	HTSSOP	PWP	20	2000	356.0	356.0	35.0

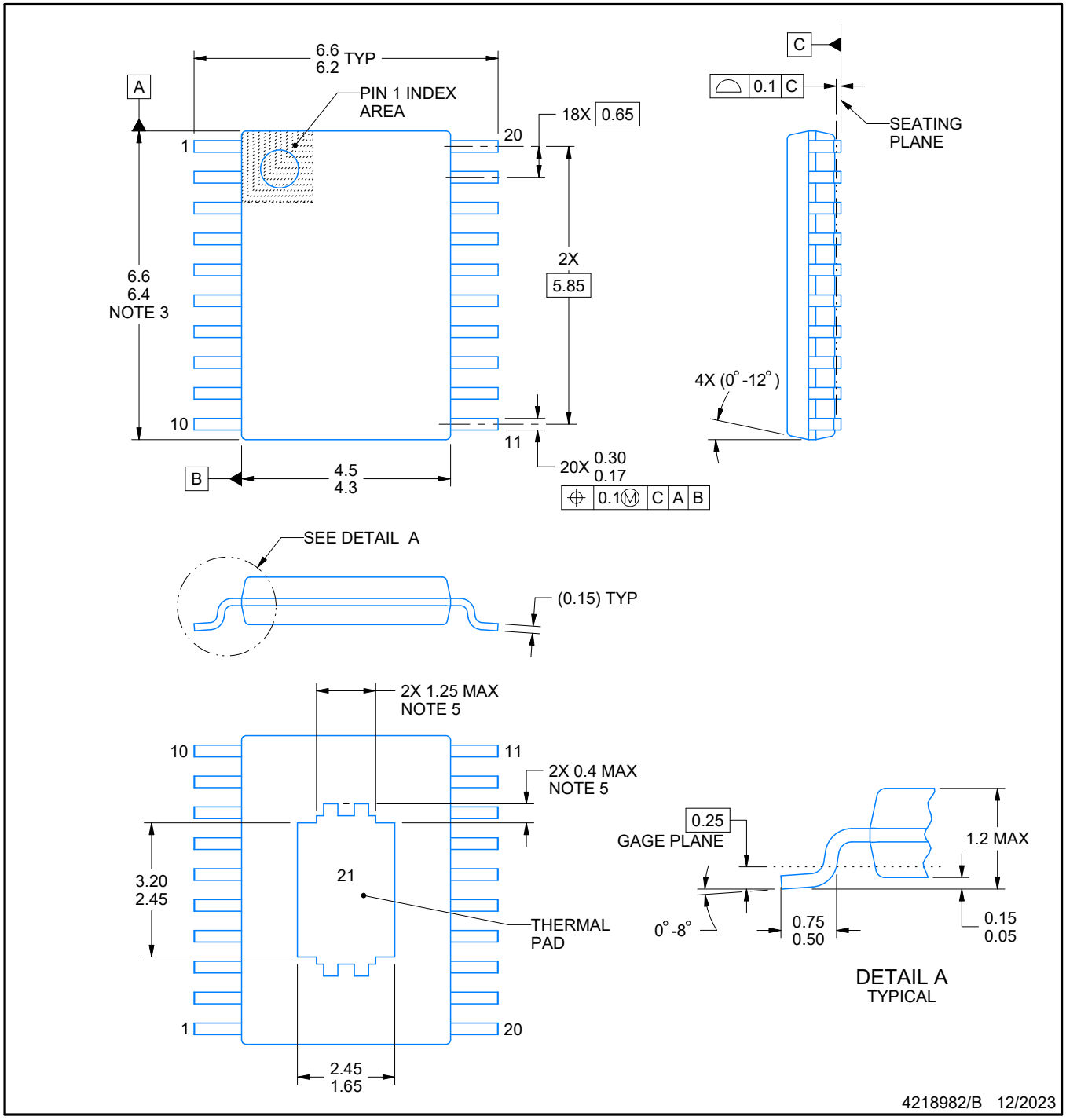

PowerPAD is a trademark of Texas Instruments.

NOTES:

1. All linear dimensions are in millimeters. Any dimensions in parenthesis are for reference only. Dimensioning and tolerancing per ASME Y14.5M.
2. This drawing is subject to change without notice.
3. This dimension does not include mold flash, protrusions, or gate burrs. Mold flash, protrusions, or gate burrs shall not exceed 0.15 mm per side.
4. Reference JEDEC registration MO-153.
5. Features may differ or may not be present.

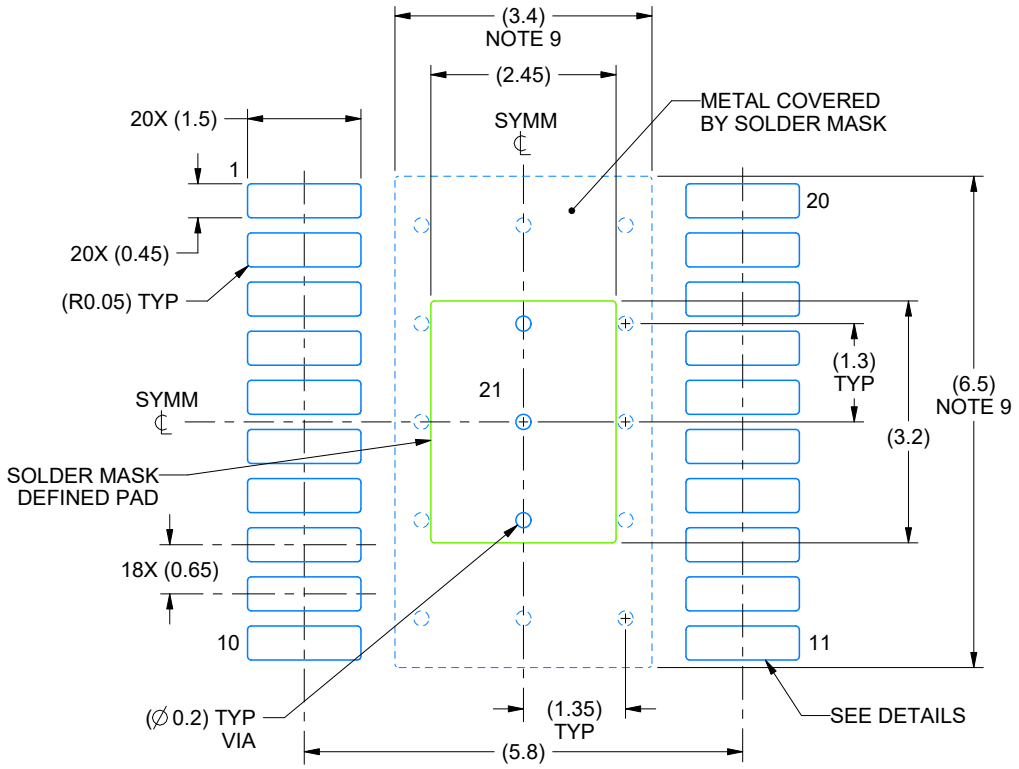

LAND PATTERN EXAMPLE
EXPOSED METAL SHOWN
SCALE: 10X

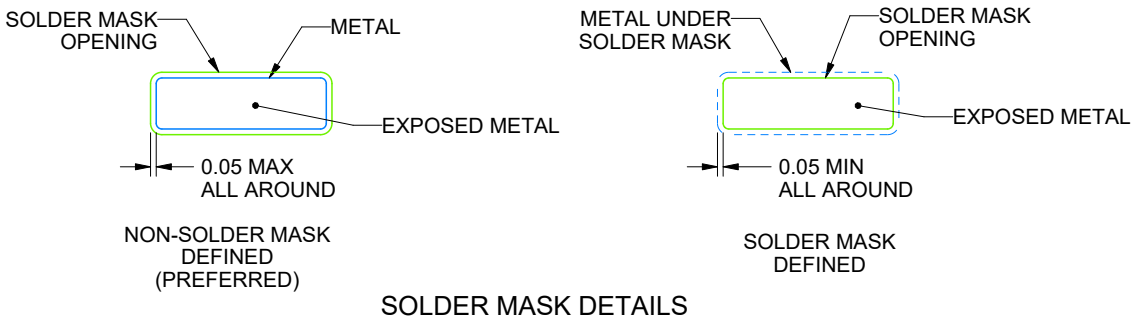

SOLDER MASK DETAILS

4218982/B 12/2023

NOTES: (continued)

6. Publication IPC-7351 may have alternate designs.
7. Solder mask tolerances between and around signal pads can vary based on board fabrication site.
8. This package is designed to be soldered to a thermal pad on the board. For more information, see Texas Instruments literature numbers SLMA002 (www.ti.com/lit/slma002) and SLMA004 (www.ti.com/lit/slma004).
9. Size of metal pad may vary due to creepage requirement.
10. Vias are optional depending on application, refer to device data sheet. It is recommended that vias under paste be filled, plugged or tented.

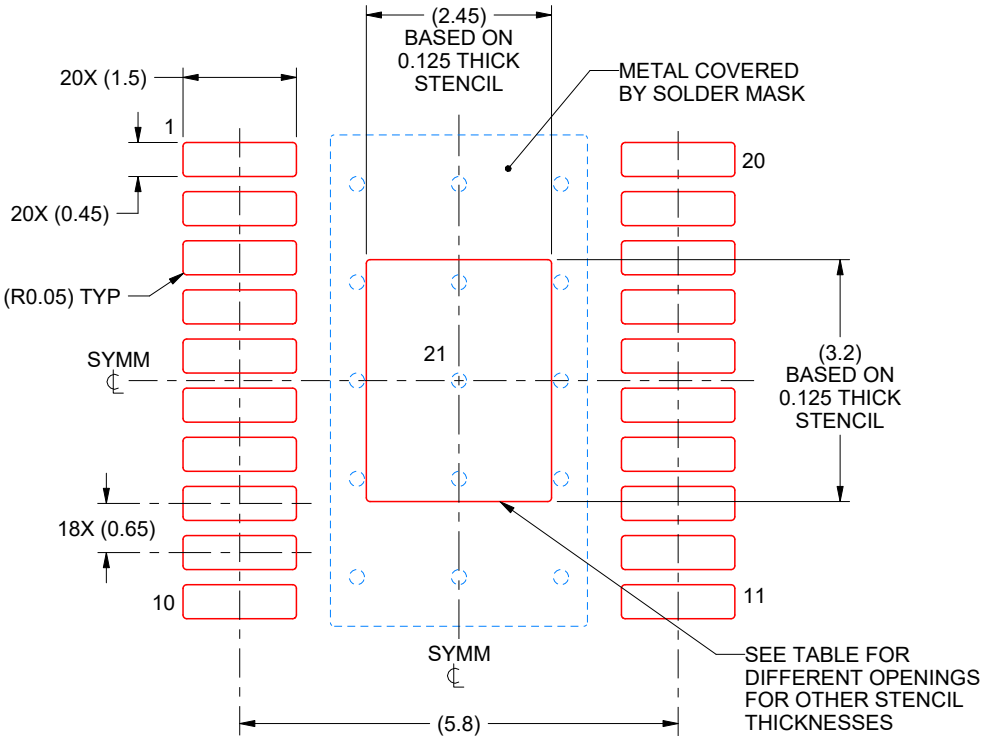

SOLDER PASTE EXAMPLE
BASED ON 0.125 mm THICK STENCIL
SCALE: 10X

STENCIL THICKNESS	SOLDER STENCIL OPENING
0.1	2.74 X 3.58
0.125	2.5 X 3.2 (SHOWN)
0.15	2.24 X 2.92
0.175	2.07 X 2.70

4218982/B 12/2023

NOTES: (continued)

11. Laser cutting apertures with trapezoidal walls and rounded corners may offer better paste release. IPC-7525 may have alternate design recommendations.
12. Board assembly site may have different recommendations for stencil design.

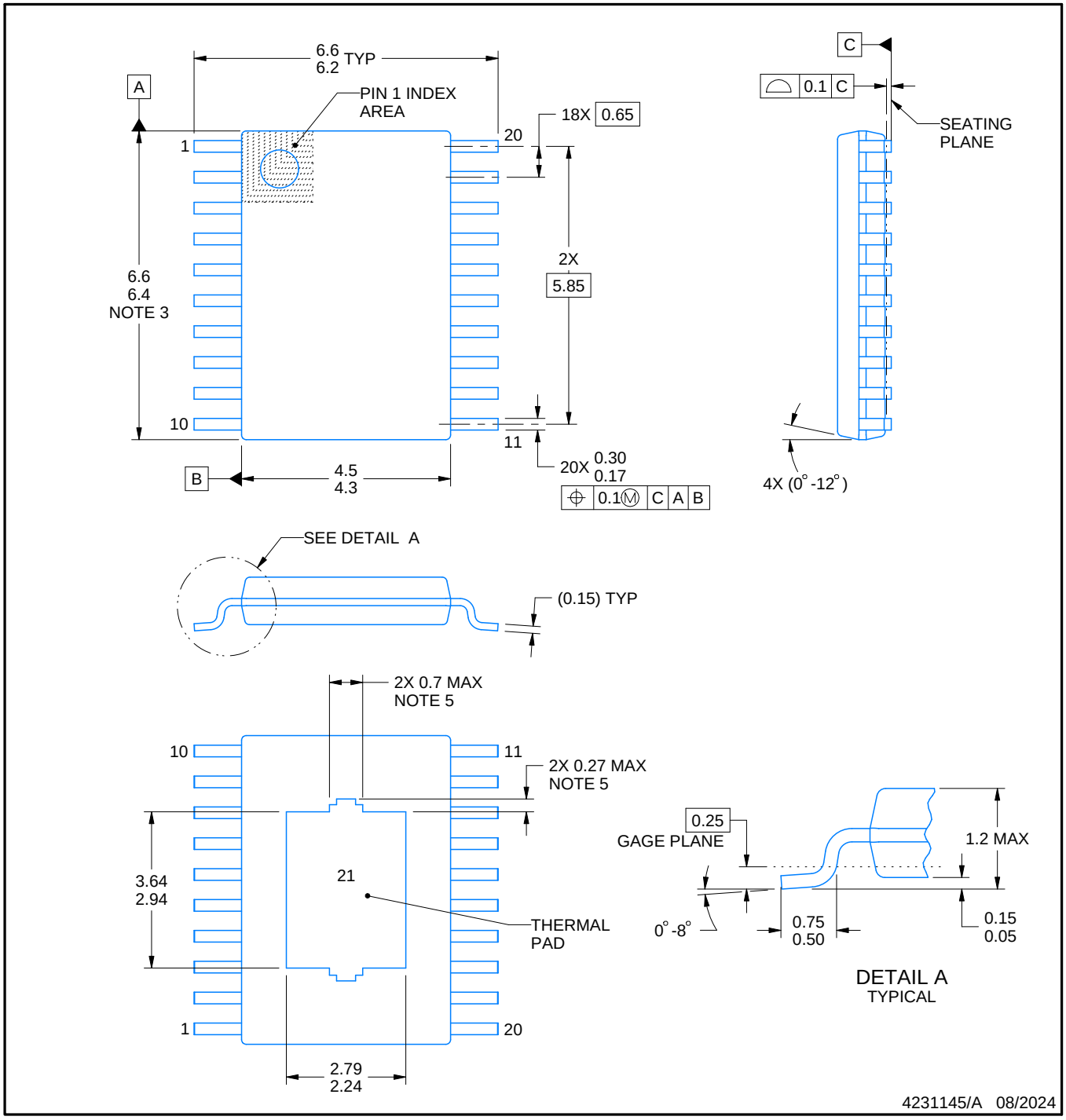

PowerPAD is a trademark of Texas Instruments.

NOTES:

1. All linear dimensions are in millimeters. Any dimensions in parenthesis are for reference only. Dimensioning and tolerancing per ASME Y14.5M.
2. This drawing is subject to change without notice.
3. This dimension does not include mold flash, protrusions, or gate burrs. Mold flash, protrusions, or gate burrs shall not exceed 0.15 mm per side.
4. Reference JEDEC registration MO-153.
5. Features may differ or may not be present.

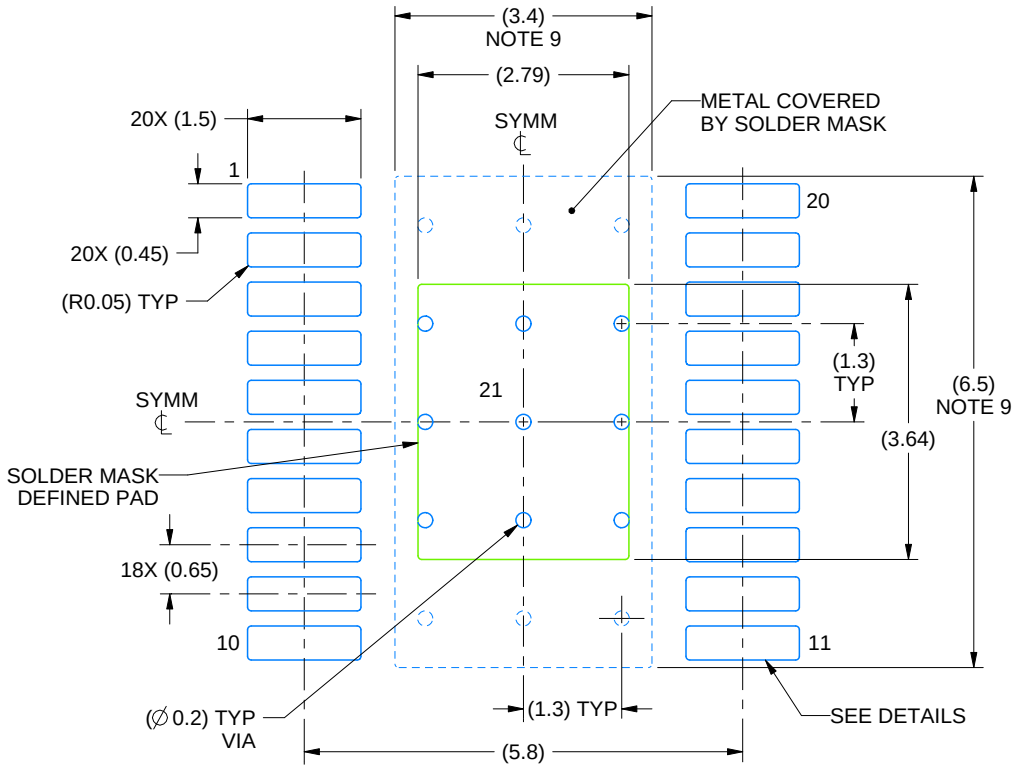

LAND PATTERN EXAMPLE
EXPOSED METAL SHOWN
SCALE: 10X

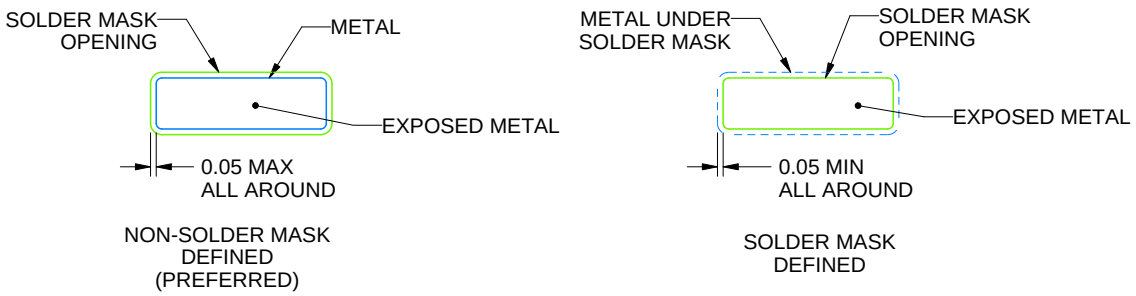

SOLDER MASK DETAILS

4231145/A 08/2024

NOTES: (continued)

6. Publication IPC-7351 may have alternate designs.
7. Solder mask tolerances between and around signal pads can vary based on board fabrication site.
8. This package is designed to be soldered to a thermal pad on the board. For more information, see Texas Instruments literature numbers SLMA002 (www.ti.com/lit/slma002) and SLMA004 (www.ti.com/lit/slma004).
9. Size of metal pad may vary due to creepage requirement.
10. Vias are optional depending on application, refer to device data sheet. It is recommended that vias under paste be filled, plugged or tented.

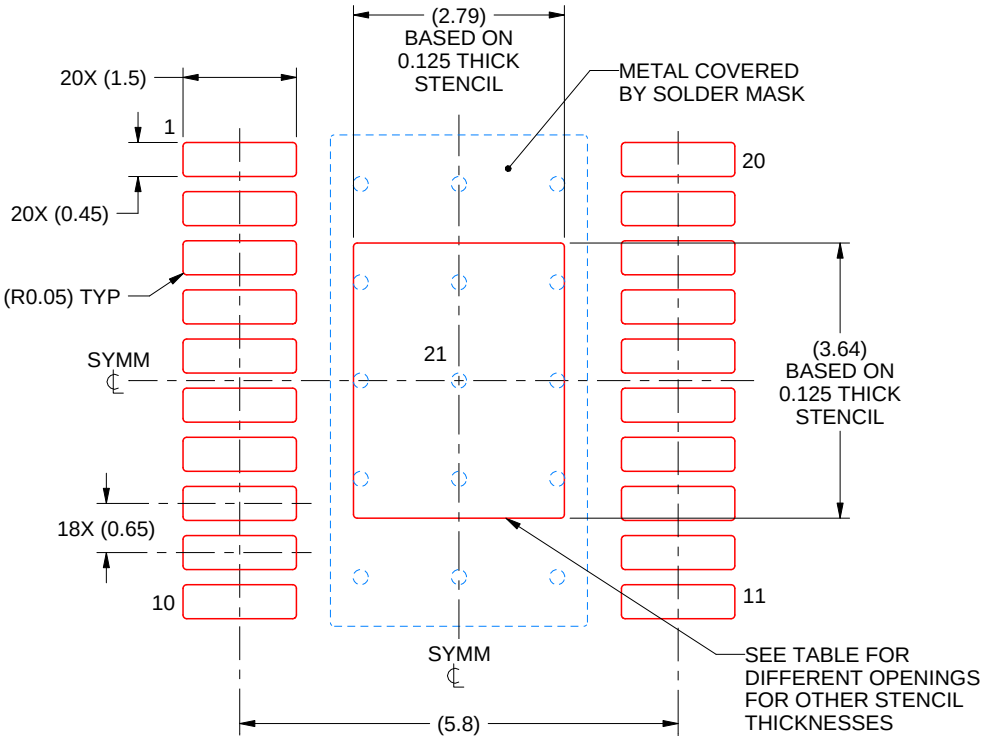

SOLDER PASTE EXAMPLE
BASED ON 0.125 mm THICK STENCIL
SCALE: 10X

STENCIL THICKNESS	SOLDER STENCIL OPENING
0.1	3.12 X 4.07
0.125	2.79 X 3.64 (SHOWN)
0.15	2.55 X 3.32
0.175	2.36 X 3.08

4231145/A 08/2024

NOTES: (continued)

11. Laser cutting apertures with trapezoidal walls and rounded corners may offer better paste release. IPC-7525 may have alternate design recommendations.
12. Board assembly site may have different recommendations for stencil design.

IMPORTANT NOTICE AND DISCLAIMER

TI PROVIDES TECHNICAL AND RELIABILITY DATA (INCLUDING DATA SHEETS), DESIGN RESOURCES (INCLUDING REFERENCE DESIGNS), APPLICATION OR OTHER DESIGN ADVICE, WEB TOOLS, SAFETY INFORMATION, AND OTHER RESOURCES “AS IS” AND WITH ALL FAULTS, AND DISCLAIMS ALL WARRANTIES, EXPRESS AND IMPLIED, INCLUDING WITHOUT LIMITATION ANY IMPLIED WARRANTIES OF MERCHANTABILITY, FITNESS FOR A PARTICULAR PURPOSE OR NON-INFRINGEMENT OF THIRD PARTY INTELLECTUAL PROPERTY RIGHTS.

These resources are intended for skilled developers designing with TI products. You are solely responsible for (1) selecting the appropriate TI products for your application, (2) designing, validating and testing your application, and (3) ensuring your application meets applicable standards, and any other safety, security, regulatory or other requirements.

These resources are subject to change without notice. TI grants you permission to use these resources only for development of an application that uses the TI products described in the resource. Other reproduction and display of these resources is prohibited. No license is granted to any other TI intellectual property right or to any third party intellectual property right. TI disclaims responsibility for, and you will fully indemnify TI and its representatives against, any claims, damages, costs, losses, and liabilities arising out of your use of these resources.

TI’s products are provided subject to TI’s Terms of Sale or other applicable terms available either on ti.com or provided in conjunction with such TI products. TI’s provision of these resources does not expand or otherwise alter TI’s applicable warranties or warranty disclaimers for TI products.

TI objects to and rejects any additional or different terms you may have proposed.

Mailing Address: Texas Instruments, Post Office Box 655303, Dallas, Texas 75265
Copyright © 2025, Texas Instruments Incorporated