DRV5011 Low-Voltage, Digital-Latch Hall Effect Sensor

1 Features

- Ultra-small X2SON, SOT-23, DSBGA or TO-92 package
- High magnetic sensitivity: ±2 mT (typical)
- Robust hysteresis: 4 mT (typical)
- Fast sensing bandwidth: 30-kHz
- V_{CC} operating range: 2.5-V to 5.5-V
- Push-pull CMOS output
  - Capable of 5-mA sourcing, 20-mA sinking
- Operating temperature: –40°C to +135°C

2 Applications

- Brushless dc motor sensors
- Incremental rotary encoding:
  - Brushed dc motor feedback
  - Motor speed (tachometer)
  - Mechanical travel
  - Fluid measurement
  - Knob turning
  - Wheel speed
- E-bikes
- Flow meters

3 Description

The DRV5011 device is a digital-latch Hall effect sensor designed for motors and other rotary systems.

The device has an efficient low-voltage architecture that operates from 2.5 V to 5.5 V. The device is offered in standard SOT-23, low-profile X2SON, DSBGA and TO-92 packages. The output is a push-pull driver that requires no pullup resistor, enabling more compact systems.

When a south magnetic pole is near the top of the package and the B_{OP} threshold is exceeded, the device drives a low voltage. The output stays low until a north pole is applied and the B_{RP} threshold is crossed, which causes the output to drive a high voltage. Alternating north and south poles are required to toggle the output, and integrated hysteresis separates B_{OP} and B_{RP} to provide robust switching.

The device produces consistent performance across a wide ambient temperature range of –40°C to +135°C.

Device Information(1)

PART NUMBER	PACKAGE	BODY SIZE (NOM)
DRV5011	DSBGA (4)	0.80 mm × 0.80 mm
	SOT-23 (3)	2.92 mm × 1.30 mm
	X2SON (4)	1.10 mm × 1.40 mm
	TO-92 (3)	4.00 mm × 3.15 mm

(1) For all available packages, see the package option addendum at the end of the data sheet.

Typical Schematic

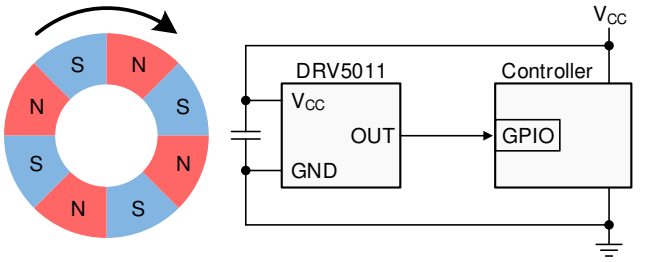

Copyright © 2017, Texas Instruments Incorporated

Magnetic Response

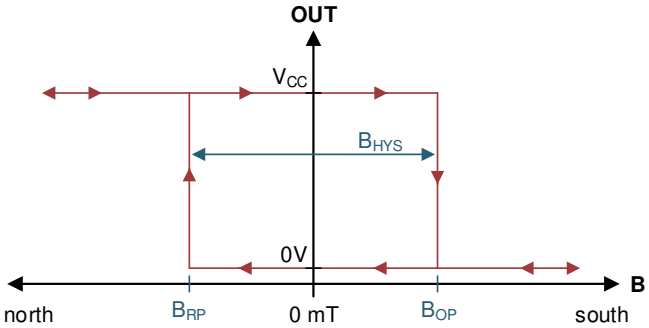

An IMPORTANT NOTICE at the end of this data sheet addresses availability, warranty, changes, use in safety-critical applications, intellectual property matters and other important disclaimers. PRODUCTION DATA.

Table of Contents

1 **Features** ... 1
2 **Applications** ... 1
3 **Description** ... 1
4 **Revision History** ... 2
5 **Pin Configuration and Functions** ... 3
6 **Specifications** ... 4
6.1 Absolute Maximum Ratings ... 4
6.2 ESD Ratings ... 4
6.3 Recommended Operating Conditions ... 4
6.4 Thermal Information ... 5
6.5 Electrical Characteristics ... 5
6.6 Magnetic Characteristics ... 5
6.7 Typical Characteristics ... 6
7 **Detailed Description** ... 7
7.1 Overview ... 7
7.2 Functional Block Diagram ... 7
7.3 Feature Description ... 7
7.4 Device Functional Modes ... 10
8 **Application and Implementation** ... 11
8.1 Application Information ... 11
8.2 Typical Applications ... 11
8.3 Dos and Don'ts ... 14
9 **Power Supply Recommendations** ... 15
10 **Layout** ... 15
10.1 Layout Guidelines ... 15
10.2 Layout Examples ... 15
11 **Device and Documentation Support** ... 16
11.1 Device Support ... 16
11.2 Documentation Support ... 16
11.3 Receiving Notification of Documentation Updates 16
11.4 Community Resources ... 16
11.5 Trademarks ... 16
11.6 Electrostatic Discharge Caution ... 16
11.7 Glossary ... 16
12 **Mechanical, Packaging, and Orderable Information** ... 16

4 Revision History

Changes from Revision A (April 2019) to Revision B	Page
• Added LPG (TO-92) package to the data sheet	1

Changes from Original (December 2017) to Revision A	Page
• Added YBH (DSBGA) package to data sheet	1
• Added recommendation to limit power supply voltage variation to less than 50 mV_{PP} to *Power Supply Recommendations* section	15

Copyright © 2017–2020, Texas Instruments Incorporated

5 Pin Configuration and Functions

DBZ Package
3-Pin SOT-23
Top View

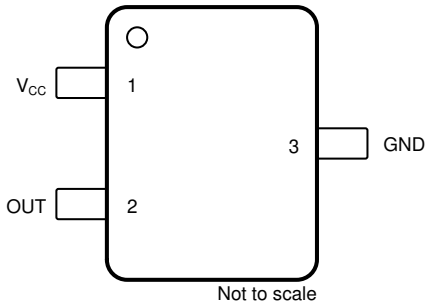

DMR Package
4-Pin X2SON With Exposed Thermal Pad
Top View

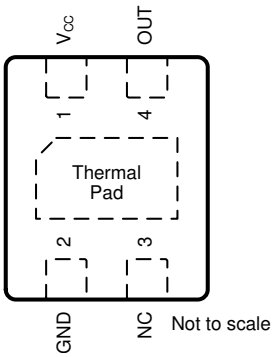

YBH Package
4-Pin DSBGA
Top View

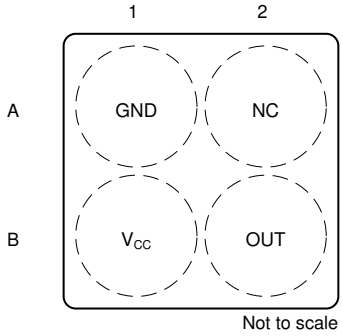

LPG Package
3-Pin TO-92
Top View

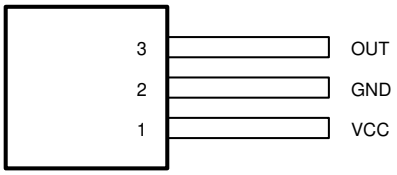

Pin Functions

PIN					I/O	DESCRIPTION
NAME	DSBGA	SOT-23	X2SON	TO-92		
GND	A1	3	2	2	—	Ground reference
NC	A2	—	3	—	—	No-connect. This pin is not connected to the silicon. Leave this pin floating or tied to ground, and soldered to the board for mechanical support.
OUT	B2	2	4	3	O	Push-pull CMOS output. Drives a V_{CC} or ground level.
V_{CC}	B1	1	1	1	—	2.5-V to 5.5-V power supply. TI recommends connecting this pin to a ceramic capacitor to ground with a value of at least 0.01 µF.
Thermal Pad	—	—	Thermal Pad	—	—	Leave thermal pad floating or tied to ground, and soldered to the board for mechanical support.

6 Specifications

6.1 Absolute Maximum Ratings

over operating free-air temperature range (unless otherwise noted)[1]

			MIN	MAX	UNIT
V_{CC}	Power-supply voltage	V_{CC}	–0.3	5.5	V
	Power-supply voltage slew rate	V_{CC}	Unlimited		V/µs
V_O	Output voltage	OUT	–0.3	V_{CC} + 0.3	V
I_O	Output current	OUT	–5	30	mA
B	Magnetic flux density		Unlimited		T
T_J	Operating junction temperature			140	°C
T_A	Operating ambient temperature	For SOT-23 (DBZ), X2SON (DMR) and TO-92 (LPG)	–40	135	°C
		For DSBGA (YBH)	–40	125	
T_{stg}	Storage temperature		–65	150	°C

(1) Stresses beyond those listed under *Absolute Maximum Ratings* may cause permanent damage to the device. These are stress ratings only, which do not imply functional operation of the device at these or any other conditions beyond those indicated under *Recommended Operating Conditions*. Exposure to absolute-maximum-rated conditions for extended periods may affect device reliability.

6.2 ESD Ratings

			VALUE	UNIT
$V_{(ESD)}$	Electrostatic discharge	Human-body model (HBM), per ANSI/ESDA/JEDEC JS-001[1]	±6000	V
		Charged-device model (CDM), per JEDEC specification JESD22-C101[2]	±750	

(1) JEDEC document JEP155 states that 500-V HBM allows safe manufacturing with a standard ESD control process.
(2) JEDEC document JEP157 states that 250-V CDM allows safe manufacturing with a standard ESD control process.

6.3 Recommended Operating Conditions

over operating free-air temperature range (unless otherwise noted)

			MIN	MAX	UNIT
V_{CC}	Power supply voltage	V_{CC}	2.5	5.5	V
V_O	Output voltage	OUT	0	V_{CC}	V
I_O	Output current[1]	OUT	–5	20	mA
T_J	Operating junction temperature			140	°C
T_A	Operating ambient temperature	For SOT-23 (DBZ), X2SON (DMR) and TO-92 (LPG)	–40	135	°C
		For DSBGA (YBH)	-40	125	

(1) Device-sourced current is negative. Device-sunk current is positive.

Copyright © 2017–2020, Texas Instruments Incorporated

6.4 Thermal Information

THERMAL METRIC[1]		DRV5011				UNIT
		DBZ (SOT-23)	DMR (X2SON)	YBH (DSBGA)	LPG (TO-92)	
		3 PINS	4 PINS	4 PINS	3 PINS	
$R_{\theta JA}$	Junction-to-ambient thermal resistance	356	159	194.1	183.1	°C/W
$R_{\theta JC(top)}$	Junction-to-case (top) thermal resistance	128	77	1.6	74.2	°C/W
$R_{\theta JB}$	Junction-to-board thermal resistance	94	102	68	158.8	°C/W
ψ_{JT}	Junction-to-top characterization parameter	11.4	0.9	0.8	15.2	°C/W
ψ_{JB}	Junction-to-board characterization parameter	92	100	67.9	158.8	°C/W

(1) For more information about traditional and new thermal metrics, see the *Semiconductor and IC Package Thermal Metrics* application report.

6.5 Electrical Characteristics

for V_{CC} = 2.5 V to 5.5 V, over operating free-air temperature range (unless otherwise noted)

PARAMETER		TEST CONDITIONS	MIN	TYP	MAX	UNIT
I_{CC}	Operating supply current			2.3	3	mA
t_{ON}	Power-on time (see Figure 10)			40	70	µs
t_d	Propagation delay time	From change in B to change in OUT		13	25	µs
V_{OH}	High-level output voltage	I_O = –1 mA	V_{CC} – 0.35	V_{CC} – 0.1		V
V_{OL}	Low-level output voltage	I_O = 20 mA		0.15	0.4	V

6.6 Magnetic Characteristics

for V_{CC} = 2.5 V to 5.5 V, over operating free-air temperature range (unless otherwise noted)

PARAMETER		TEST CONDITIONS	MIN	TYP	MAX	UNIT
f_{BW}	Sensing bandwidth			30		kHz
B_{OP}	Magnetic threshold operate point (see Figure 8)		0.6	2	3.8	mT
B_{RP}	Magnetic threshold release point (see Figure 8)		–3.8	–2	–0.6	mT
B_{HYS}	Magnetic hysteresis: $\lvert B_{OP} – B_{RP} \rvert$		2	4	6	mT

6.7 Typical Characteristics

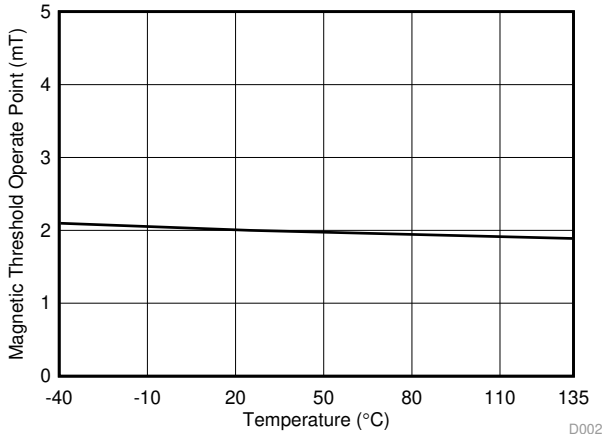

Figure 1. B_{OP} vs Temperature

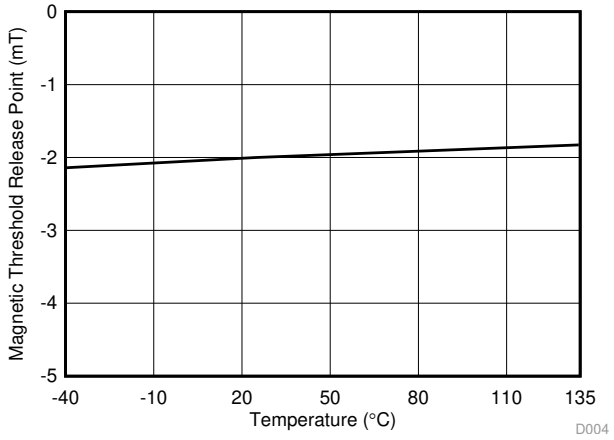

Figure 2. B_{RP} vs Temperature

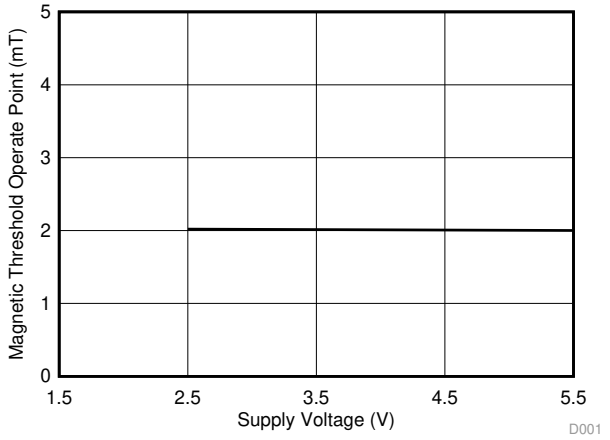

Figure 3. B_{OP} vs V_{CC}

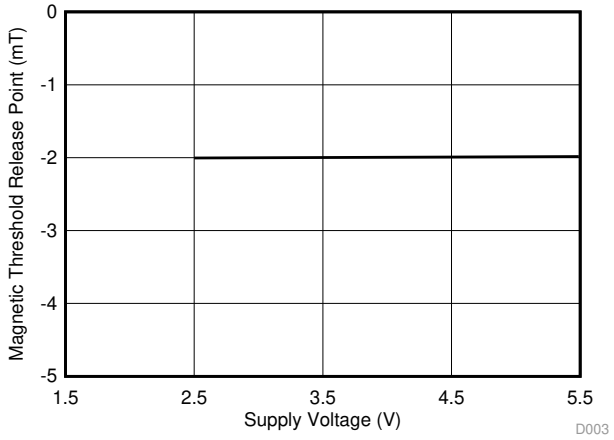

Figure 4. B_{RP} vs V_{CC}

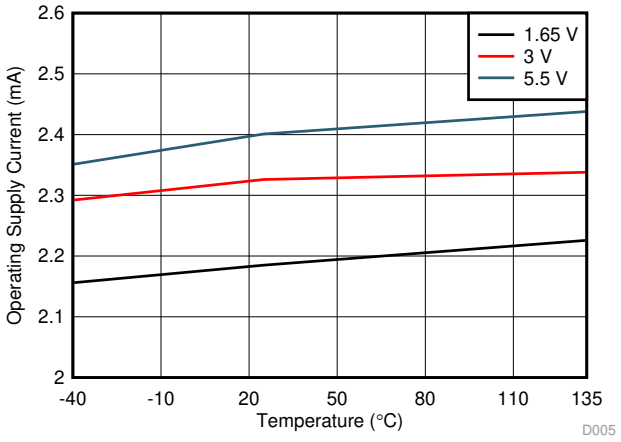

Figure 5. I_{CC} vs Temperature

Copyright © 2017–2020, Texas Instruments Incorporated

7 Detailed Description

7.1 Overview

The DRV5011 is a magnetic sensor with a digital output that latches the most recent pole measured. Applying a south magnetic pole near the top of the package causes the output to drive low, whereas a north magnetic pole causes the output to drive high, and the absence of a magnetic field causes the output to continue to drive the previous state, whether low or high.

The device integrates a Hall effect element, analog signal conditioning, offset cancellation circuits, amplifiers, and comparators. This provides stable performance across a wide temperature range and resistance to mechanical stress.

7.2 Functional Block Diagram

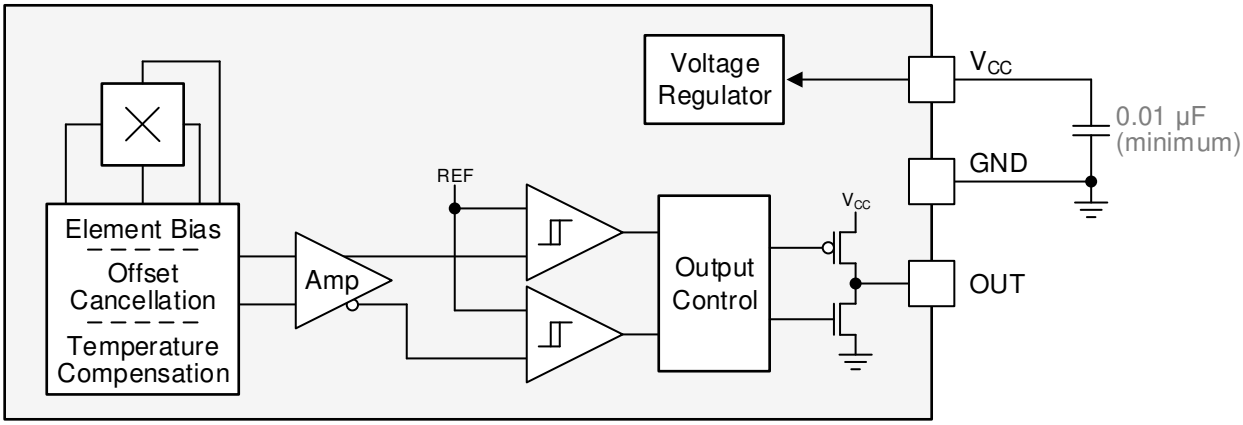

Copyright © 2017, Texas Instruments Incorporated

7.3 Feature Description

7.3.1 Magnetic Flux Direction

The DRV5011 is sensitive to the magnetic field component that is perpendicular to the top of the package, as shown in Figure 6.

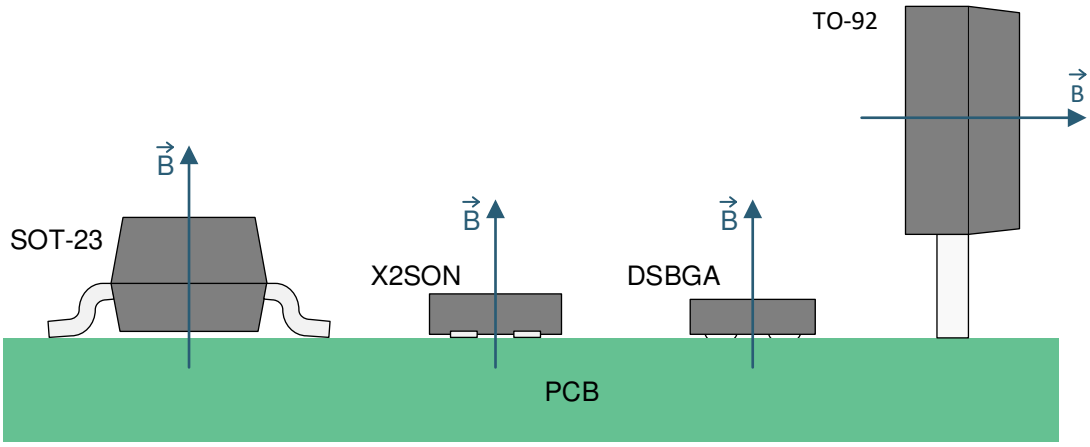

Figure 6. Direction of Sensitivity

Feature Description (continued)

The magnetic flux that travels from the bottom to the top of the package is considered positive in this data sheet. This condition exists when a south magnetic pole is near the top of the package. The magnetic flux that travels from the top to the bottom of the package results in negative millitesla values. Figure 7 shows the flux direction polarity.

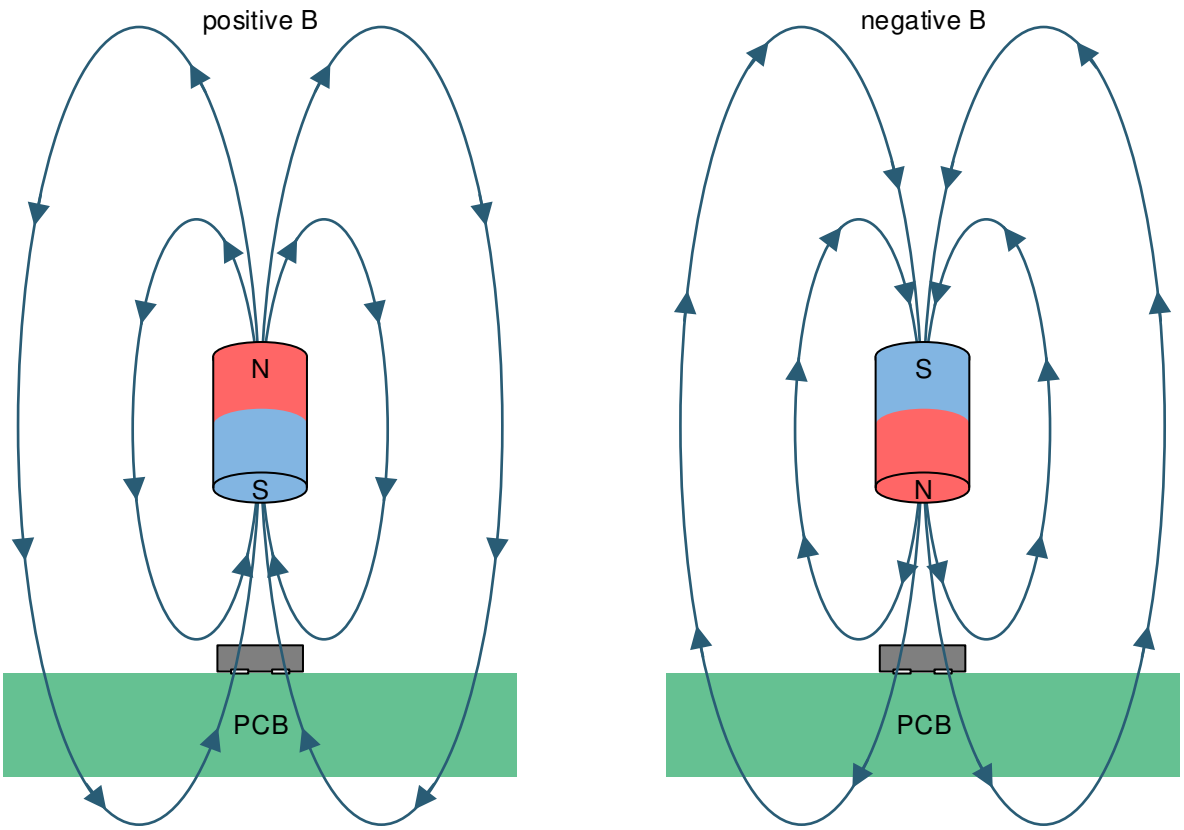

Figure 7. Flux Direction Polarity

7.3.2 Magnetic Response

Figure 8 shows the device functionality and hysteresis.

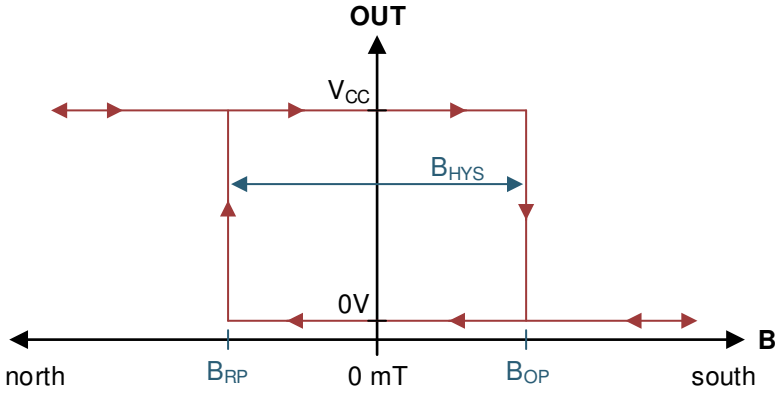

Figure 8. Device Functionality

Copyright © 2017–2020, Texas Instruments Incorporated

Feature Description (continued)

7.3.3 Output Driver

Figure 9 shows the device push-pull CMOS output that can drive a V_{CC} or ground level.

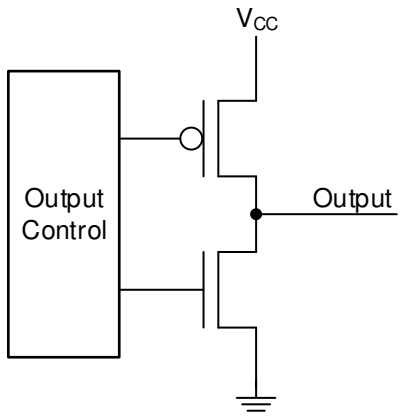

Figure 9. Push-Pull Output (Simplified)

7.3.4 Power-On Time

Figure 10 shows that after the V_{CC} voltage is applied, the DRV5011 measures the magnetic field and sets the output within the t_{ON} time.

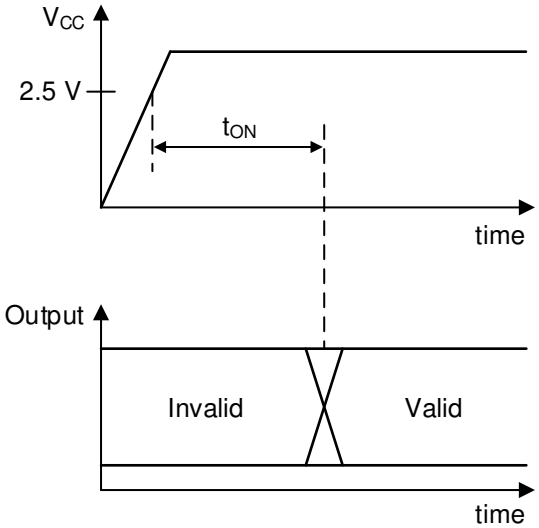

Figure 10. t_{ON} Definition

Feature Description (continued)

7.3.5 Hall Element Location

The sensing element inside the device is in the center of both packages when viewed from the top. Figure 11 shows the tolerances and side-view dimensions.

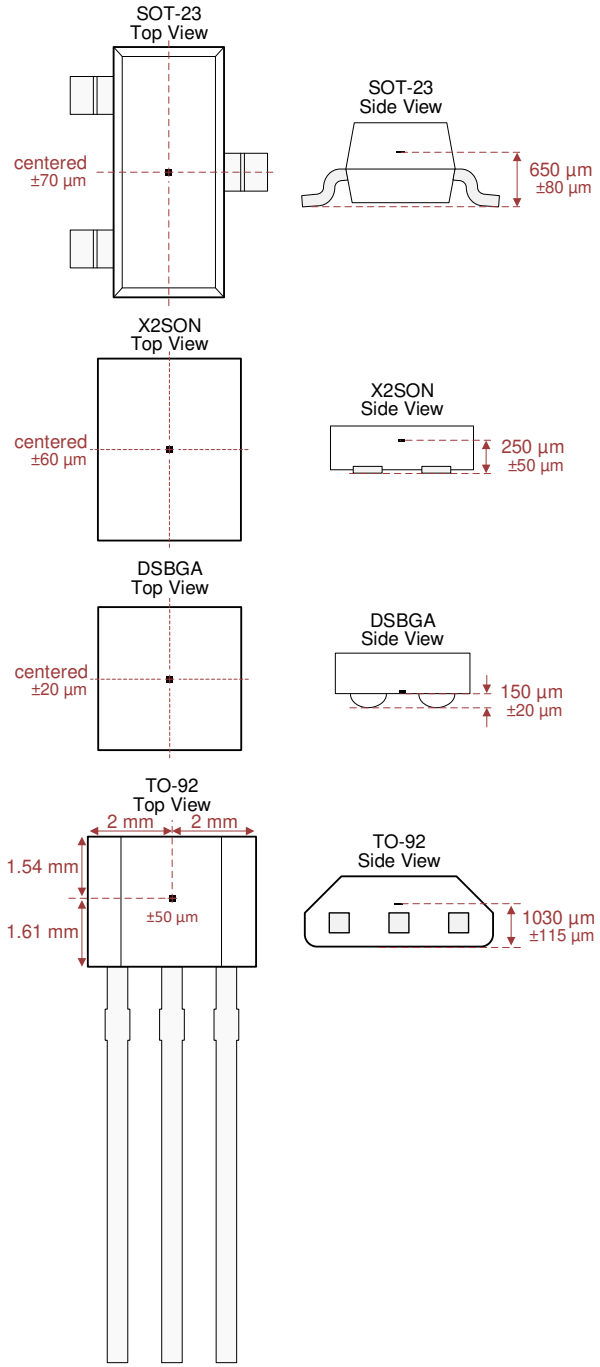

Figure 11. Hall Element Location

7.4 Device Functional Modes

The DRV5011 has one mode of operation that applies when the *Recommended Operating Conditions* are met.

Copyright © 2017–2020, Texas Instruments Incorporated

8 Application and Implementation

NOTE

Information in the following applications sections is not part of the TI component specification, and TI does not warrant its accuracy or completeness. TI's customers are responsible for determining suitability of components for their purposes. Customers should validate and test their design implementation to confirm system functionality.

8.1 Application Information

The DRV5011 is typically used in rotary applications for brushless DC (BLDC) motor sensors or incremental rotary encoding.

For reliable functionality, the magnet must apply a flux density at the sensor greater than the maximum B_{OP} and less than the minimum B_{RP} thresholds. Add additional margin to account for mechanical tolerance, temperature effects, and magnet variation. Magnets generally produce weaker fields as temperature increases.

8.2 Typical Applications

8.2.1 BLDC Motor Sensors Application

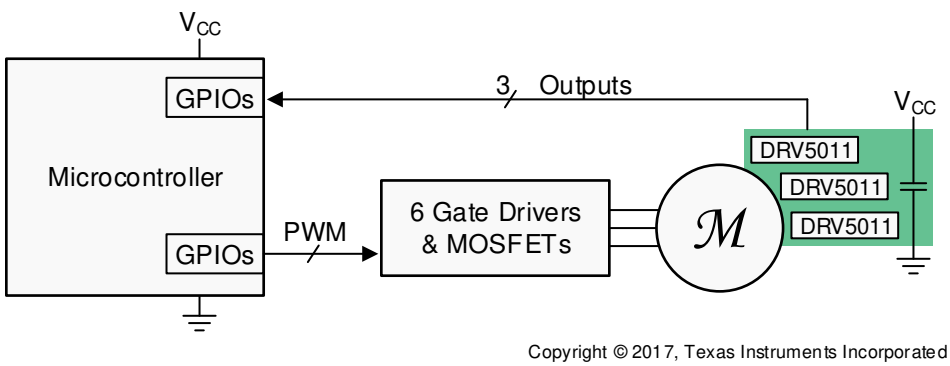

Figure 12. BLDC Motor System

8.2.1.1 Design Requirements

For this design example, use the parameters listed in Table 1.

Table 1. Design Parameters

DESIGN PARAMETER	EXAMPLE VALUE
Number of motor phases	3
Motor RPM	15 k
Number of magnet poles on the rotor	12
Magnetic material	Bonded Neodymium
Maximum temperature inside the motor	125°C
Magnetic flux density peaks at the Hall sensors at maximum temperature	±11 mT
Hall sensor V_{CC}	5 V ±10%

8.2.1.2 Detailed Design Procedure

Three-phase brushless DC motors often use three Hall effect latch devices to measure the electrical angle of the rotor and tell the controller how to drive the three wires. These wires connect to electromagnet windings, which generate magnetic fields that apply forces to the permanent magnets on the rotor.

Space the three Hall sensors across the printed-circuit board (PCB) so that they are 120 electrical degrees apart. This configuration creates six 3-bit states with equal time duration for each electrical cycle, which consists of one north and one south magnetic pole. From the center of the motor axis, the number of degrees to space each sensor equals *2 / [number of poles] × 120°*. In this design example, the first sensor is placed at 0°, the second sensor is placed 20° rotated, and the third sensor is placed 40° rotated. Alternatively, a 3× degree offset can be added or subtracted to any sensor, meaning the third sensor could alternatively be placed at 40° – (3 × 20°) = –20°.

8.2.1.3 Application Curve

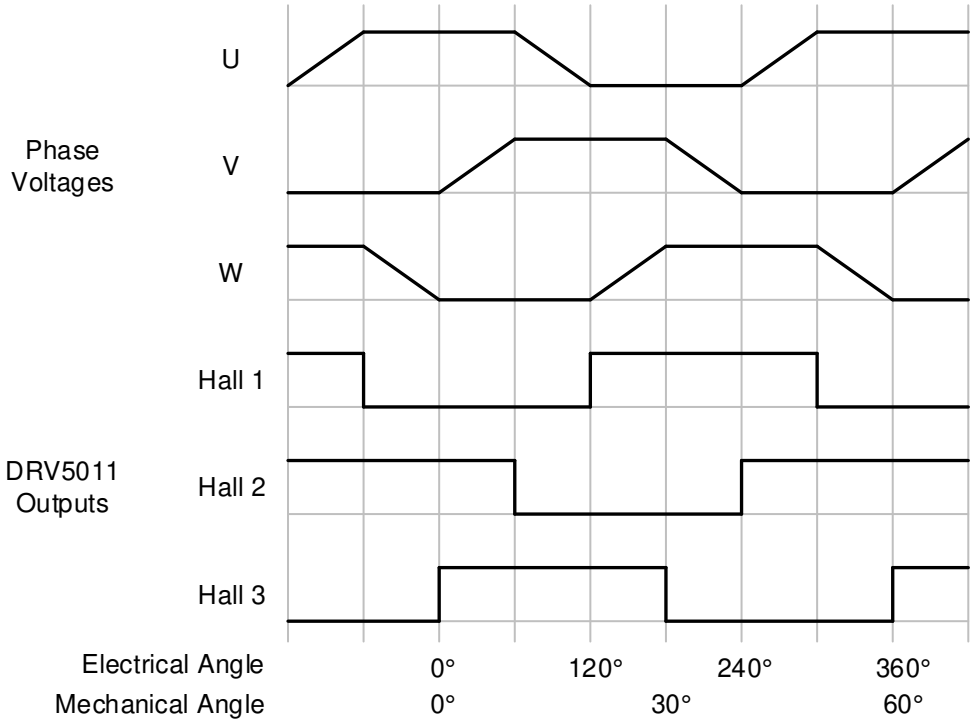

Figure 13. Phase Voltages and Hall Signals for 3-Phase BLDC Motor

Copyright © 2017–2020, Texas Instruments Incorporated

8.2.2 Incremental Rotary Encoding Application

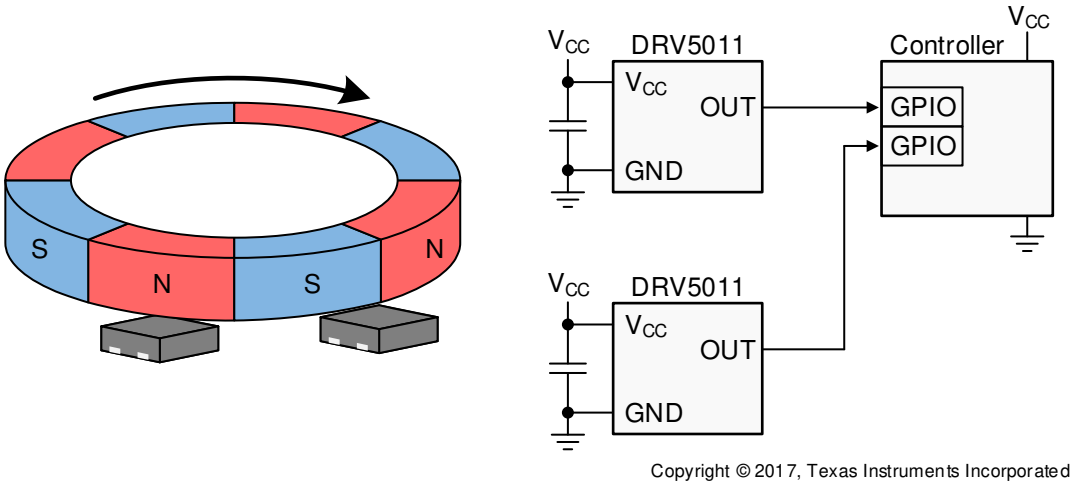

Figure 14. Incremental Rotary Encoding System

8.2.2.1 Design Requirements

For this design example, use the parameters listed in Table 2.

Table 2. Design Parameters

DESIGN PARAMETER	EXAMPLE VALUE
RPM range	0 to 45 k
Number of magnet poles	8
Magnetic material	Ferrite
Air gap above the Hall sensors	2.5 mm
Magnetic flux density peaks at the Hall sensors at maximum temperature	±7 mT

8.2.2.2 Detailed Design Procedure

Incremental encoders are used on knobs, wheels, motors, and flow meters to measure relative rotary movement. By attaching a ring magnet to the rotating component and placing a DRV5011 nearby, the sensor generates voltage pulses as the magnet turns. If directional information is also needed (clockwise versus counterclockwise), a second DRV5011 can be added with a phase offset, and then the order of transitions between the two signals describes the direction.

Creating this phase offset requires spacing the two sensors apart on the PCB, and an ideal 90° quadrature offset is attained when the sensors are separated by half the length of each magnet pole, plus any integer number of pole lengths. Figure 14 shows this configuration, as the sensors are 1.5 pole lengths apart. One of the sensors changes its output every *360° / 8 poles / 2 sensors* = 22.5° of rotation. For reference, TI Design TIDA-00480, *Automotive Hall Sensor Rotary Encoder*, uses a 66-pole magnet with changes every 2.7°.

The maximum rotational speed that can be measured is limited by the sensor bandwidth. Generally, the bandwidth must be faster than two times the number of poles per second. In this design example, the maximum speed is 45000 RPM, which involves 6000 poles per second. The DRV5011 sensing bandwidth is 30 kHz, which is five times the pole frequency. In systems where the sensor sampling rate is close to two times the number of poles per second, most of the samples measure a magnetic field that is significantly lower than the peak value, because the peaks only occur when the sensor and pole are perfectly aligned. In this case, add margin by applying a stronger magnetic field that has peaks significantly higher than the maximum B_{OP}.

8.2.2.3 Application Curve

Two signals in quadrature provide movement and direction information. Figure 15 shows how each 2-bit state has unique adjacent 2-bit states for clockwise and counterclockwise.

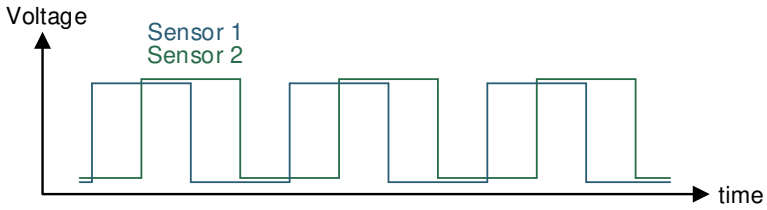

Figure 15. Quadrature Output (2-Bit)

8.3 Dos and Don'ts

The Hall element is sensitive to magnetic fields that are perpendicular to the top of the package; therefore, the correct magnet orientation must be used for the sensor to detect the field. Figure 16 shows correct and incorrect orientations when using a ring magnet.

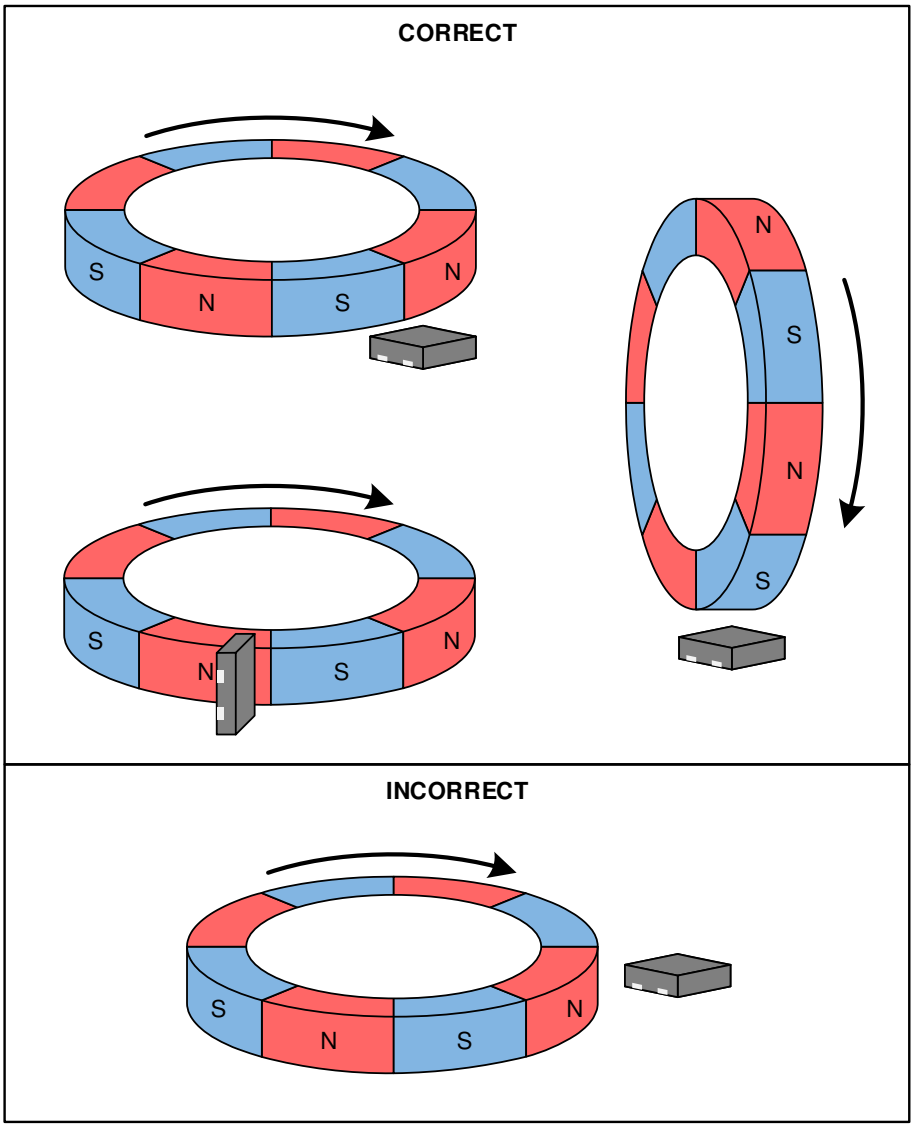

Figure 16. Correct and Incorrect Magnet Orientations

Copyright © 2017–2020, Texas Instruments Incorporated

9 Power Supply Recommendations

The DRV5011 is powered from 2.5-V to 5.5-V dc power supplies. A 0.01-µF (minimum) ceramic capacitor rated for V_{CC} must be placed as close to the DRV5011 device as possible. Larger values of the bypass capacitor may be needed to attenuate any significant high-frequency ripple and noise components generated by the power source. TI recommends limiting the supply voltage variation to less than 50 mV_{PP}.

10 Layout

10.1 Layout Guidelines

Magnetic fields pass through most nonferromagnetic materials with no significant disturbance. Embedding Hall effect sensors within plastic or aluminum enclosures and sensing magnets on the outside is common practice. Magnetic fields also easily pass through most PCBs, which makes placing the magnet on the opposite side possible.

10.2 Layout Examples

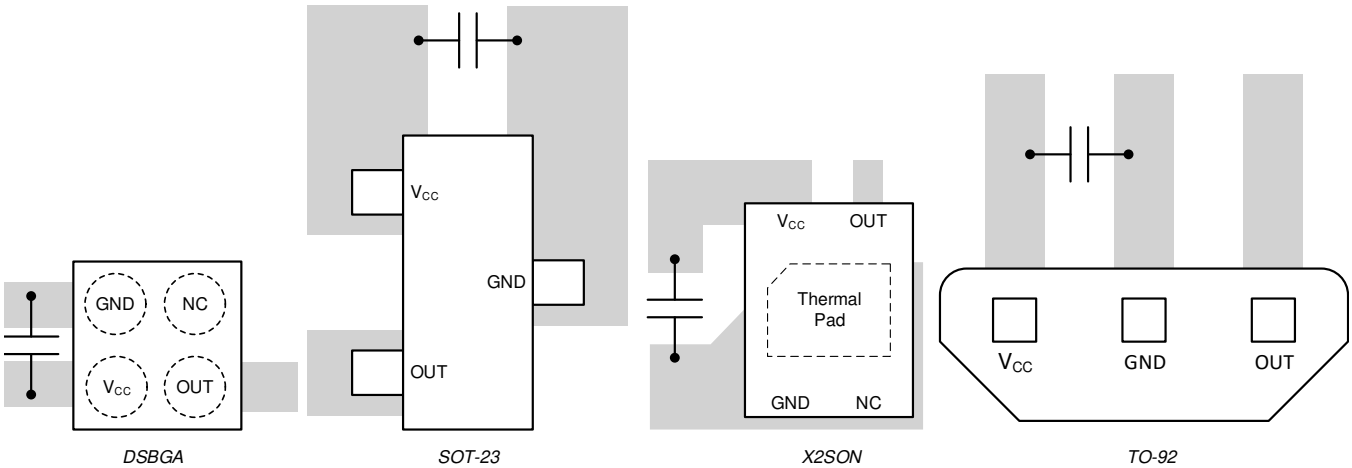

Figure 17. Layout Examples

11 Device and Documentation Support

11.1 Device Support

11.1.1 Development Support

For additional design reference, see the *Automotive Hall Sensor Rotary Encoder* TI design (TIDA-00480).

TI also offers the following evaluation modules (EVMs) for the DRV5011:

- Texas Instruments, *DRV5011 Ultra-Low Power, Digital-Latch Hall Effect Sensor Evaluation Module*
- Texas Instruments, *Breakout Adapter for SOT-23 and TO-92 Hall Sensor Evaluation*

11.2 Documentation Support

11.2.1 Related Documentation

For related documentation see the following:

- *DRV5011-5012EVM* user's guide
- *HALL-ADAPTER-EVM* user's guide

11.3 Receiving Notification of Documentation Updates

To receive notification of documentation updates, navigate to the device product folder on ti.com. In the upper right corner, click on *Alert me* to register and receive a weekly digest of any product information that has changed. For change details, review the revision history included in any revised document.

11.4 Community Resources

TI E2E™ support forums are an engineer's go-to source for fast, verified answers and design help — straight from the experts. Search existing answers or ask your own question to get the quick design help you need.

Linked content is provided "AS IS" by the respective contributors. They do not constitute TI specifications and do not necessarily reflect TI's views; see TI's Terms of Use.

11.5 Trademarks

E2E is a trademark of Texas Instruments.
All other trademarks are the property of their respective owners.

11.6 Electrostatic Discharge Caution

This integrated circuit can be damaged by ESD. Texas Instruments recommends that all integrated circuits be handled with appropriate precautions. Failure to observe proper handling and installation procedures can cause damage.

ESD damage can range from subtle performance degradation to complete device failure. Precision integrated circuits may be more susceptible to damage because very small parametric changes could cause the device not to meet its published specifications.

11.7 Glossary

SLYZ022 — *TI Glossary*.

This glossary lists and explains terms, acronyms, and definitions.

12 Mechanical, Packaging, and Orderable Information

The following pages include mechanical, packaging, and orderable information. This information is the most current data available for the designated devices. This data is subject to change without notice and revision of this document. For browser-based versions of this data sheet, refer to the left-hand navigation.

Copyright © 2017–2020, Texas Instruments Incorporated

PACKAGING INFORMATION

Orderable part number	Status (1)	Material type (2)	Package | Pins	Package qty | Carrier	RoHS (3)	Lead finish/ Ball material (4)	MSL rating/ Peak reflow (5)	Op temp (°C)	Part marking (6)
DRV5011ADDBZR	Active	Production	SOT-23 (DBZ) | 3	3000 | LARGE T&R	Yes	SN	Level-1-260C-UNLIM	-40 to 135	1AD
DRV5011ADDBZR.A	Active	Production	SOT-23 (DBZ) | 3	3000 | LARGE T&R	Yes	SN	Level-1-260C-UNLIM	-40 to 135	1AD
DRV5011ADDBZT	Obsolete	Production	SOT-23 (DBZ) | 3	-	-	Call TI	Call TI	-40 to 135	1AD
DRV5011ADDMRR	Active	Production	X2SON (DMR) | 4	3000 | LARGE T&R	Yes	SN	Level-1-260C-UNLIM	-40 to 135	1AD
DRV5011ADDMRR.A	Active	Production	X2SON (DMR) | 4	3000 | LARGE T&R	Yes	SN	Level-1-260C-UNLIM	-40 to 135	1AD
DRV5011ADDMRT	Obsolete	Production	X2SON (DMR) | 4	-	-	Call TI	Call TI	-40 to 135	1AD
DRV5011ADLPG	Active	Production	TO-92 (LPG) | 3	1000 | BULK	Yes	SN	N/A for Pkg Type	-40 to 135	11AD
DRV5011ADLPG.A	Active	Production	TO-92 (LPG) | 3	1000 | BULK	Yes	SN	N/A for Pkg Type	-40 to 135	11AD
DRV5011ADLPGM	Active	Production	TO-92 (LPG) | 3	3000 | AMMO	Yes	SN	N/A for Pkg Type	-40 to 135	11AD
DRV5011ADLPGM.A	Active	Production	TO-92 (LPG) | 3	3000 | AMMO	Yes	SN	N/A for Pkg Type	-40 to 135	11AD
DRV5011ADYBHR	Active	Production	DSBGA (YBH) | 4	3000 | LARGE T&R	Yes	SAC396	Level-1-260C-UNLIM	-40 to 125	A
DRV5011ADYBHR.A	Active	Production	DSBGA (YBH) | 4	3000 | LARGE T&R	Yes	SAC396	Level-1-260C-UNLIM	-40 to 125	A
DRV5011ADYBHT	Obsolete	Production	DSBGA (YBH) | 4	-	-	Call TI	Call TI	-40 to 125	A

(1) **Status:** For more details on status, see our product life cycle.

(2) **Material type:** When designated, preproduction parts are prototypes/experimental devices, and are not yet approved or released for full production. Testing and final process, including without limitation quality assurance, reliability performance testing, and/or process qualification, may not yet be complete, and this item is subject to further changes or possible discontinuation. If available for ordering, purchases will be subject to an additional waiver at checkout, and are intended for early internal evaluation purposes only. These items are sold without warranties of any kind.

(3) **RoHS values:** Yes, No, RoHS Exempt. See the TI RoHS Statement for additional information and value definition.

(4) **Lead finish/Ball material:** Parts may have multiple material finish options. Finish options are separated by a vertical ruled line. Lead finish/Ball material values may wrap to two lines if the finish value exceeds the maximum column width.

(5) **MSL rating/Peak reflow:** The moisture sensitivity level ratings and peak solder (reflow) temperatures. In the event that a part has multiple moisture sensitivity ratings, only the lowest level per JEDEC standards is shown. Refer to the shipping label for the actual reflow temperature that will be used to mount the part to the printed circuit board.

(6) **Part marking:** There may be an additional marking, which relates to the logo, the lot trace code information, or the environmental category of the part.

Multiple part markings will be inside parentheses. Only one part marking contained in parentheses and separated by a "~" will appear on a part. If a line is indented then it is a continuation of the previous line and the two combined represent the entire part marking for that device.

Important Information and Disclaimer: The information provided on this page represents TI's knowledge and belief as of the date that it is provided. TI bases its knowledge and belief on information provided by third parties, and makes no representation or warranty as to the accuracy of such information. Efforts are underway to better integrate information from third parties. TI has taken and continues to take reasonable steps to provide representative and accurate information but may not have conducted destructive testing or chemical analysis on incoming materials and chemicals. TI and TI suppliers consider certain information to be proprietary, and thus CAS numbers and other limited information may not be available for release.

In no event shall TI's liability arising out of such information exceed the total purchase price of the TI part(s) at issue in this document sold by TI to Customer on an annual basis.

TAPE AND REEL INFORMATION

REEL DIMENSIONS

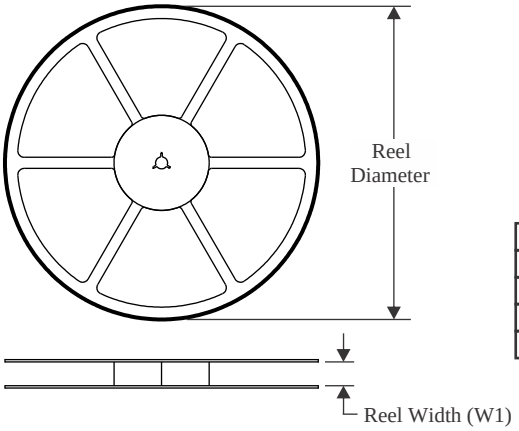

TAPE DIMENSIONS

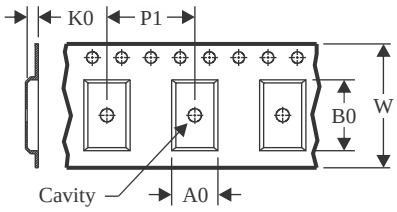

A0	Dimension designed to accommodate the component width
B0	Dimension designed to accommodate the component length
K0	Dimension designed to accommodate the component thickness
W	Overall width of the carrier tape
P1	Pitch between successive cavity centers

QUADRANT ASSIGNMENTS FOR PIN 1 ORIENTATION IN TAPE

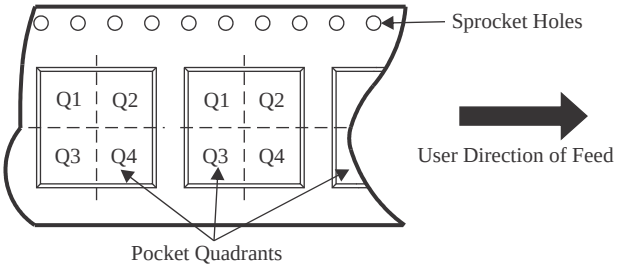

*All dimensions are nominal

Device	Package Type	Package Drawing	Pins	SPQ	Reel Diameter (mm)	Reel Width W1 (mm)	A0 (mm)	B0 (mm)	K0 (mm)	P1 (mm)	W (mm)	Pin1 Quadrant
DRV5011ADDBZR	SOT-23	DBZ	3	3000	180.0	8.4	3.15	2.77	1.22	4.0	8.0	Q3
DRV5011ADDMRR	X2SON	DMR	4	3000	180.0	8.4	1.27	1.57	0.5	4.0	8.0	Q1
DRV5011ADYBHR	DSBGA	YBH	4	3000	180.0	8.4	0.85	0.89	0.51	2.0	8.0	Q2

TAPE AND REEL BOX DIMENSIONS

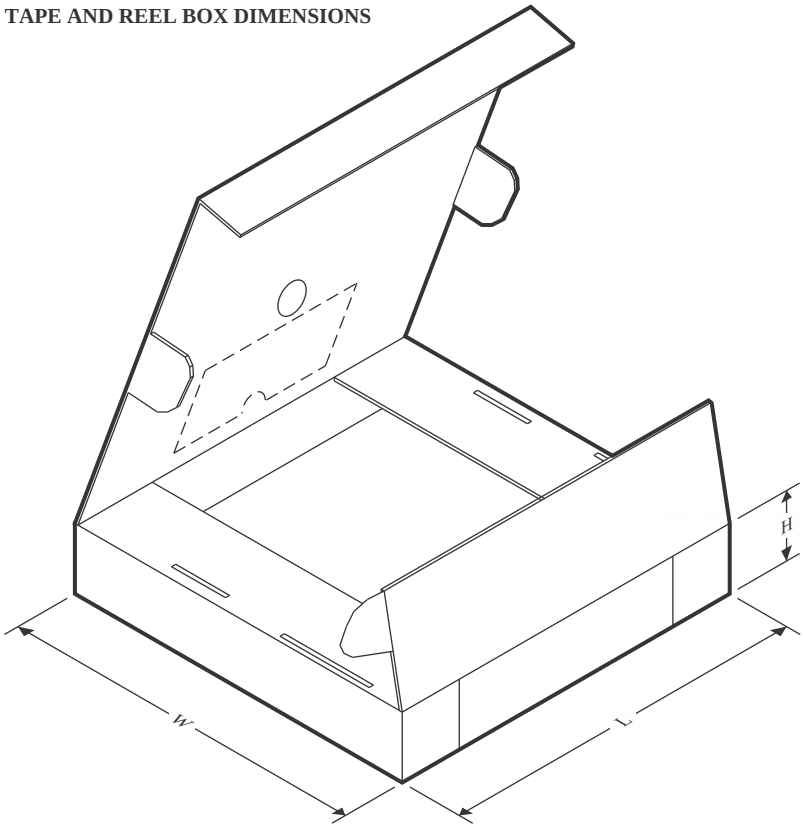

*All dimensions are nominal

Device	Package Type	Package Drawing	Pins	SPQ	Length (mm)	Width (mm)	Height (mm)
DRV5011ADDBZR	SOT-23	DBZ	3	3000	183.0	183.0	20.0
DRV5011ADDMRR	X2SON	DMR	4	3000	200.0	183.0	25.0
DRV5011ADYBHR	DSBGA	YBH	4	3000	182.0	182.0	20.0

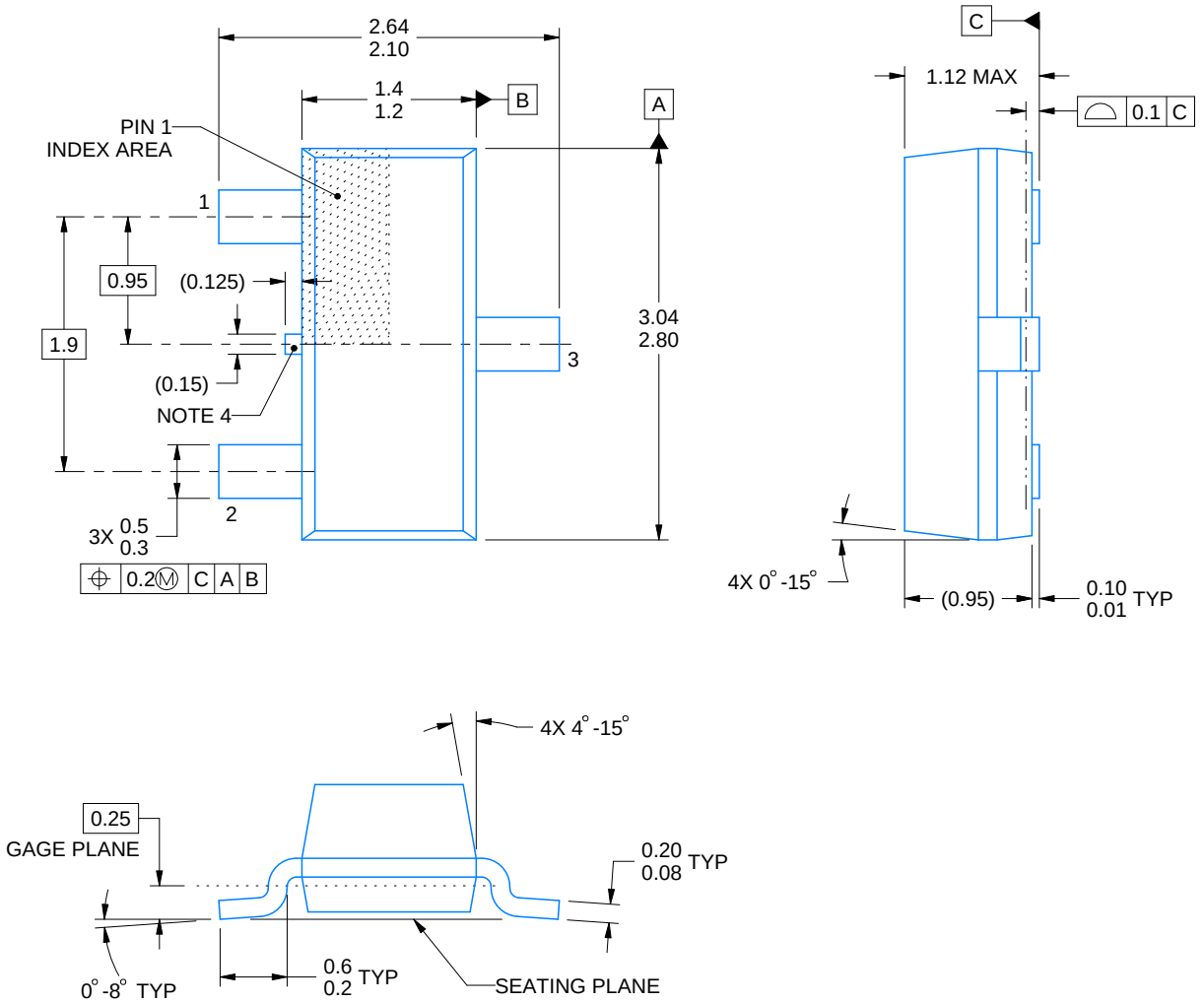

4214838/F 08/2024

NOTES:

1. All linear dimensions are in millimeters. Any dimensions in parenthesis are for reference only. Dimensioning and tolerancing per ASME Y14.5M.
2. This drawing is subject to change without notice.
3. Reference JEDEC registration TO-236, except minimum foot length.
4. Support pin may differ or may not be present.
5. Body dimensions do not include mold flash, protrusions, or gate burrs. Mold flash, protrusions, or gate burrs shall not exceed 0.25mm per side

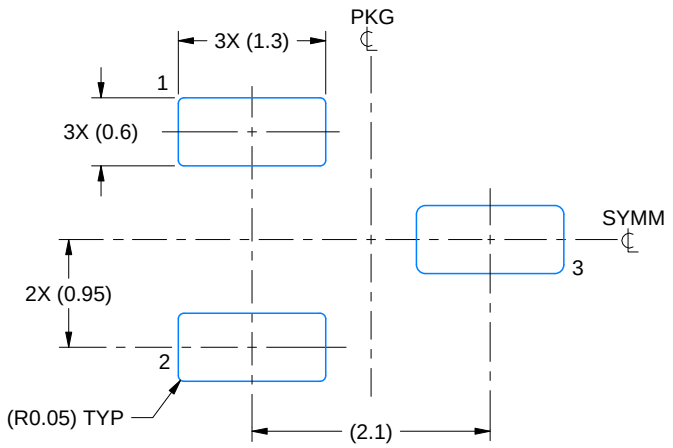

LAND PATTERN EXAMPLE
SCALE:15X

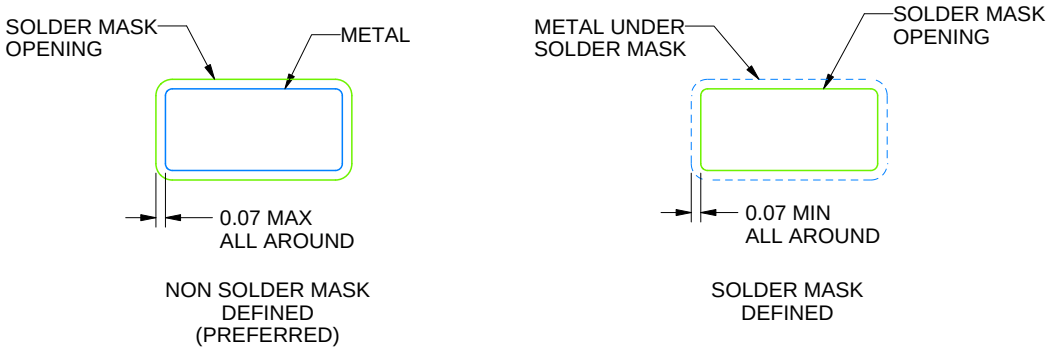

SOLDER MASK DETAILS

4214838/F 08/2024

NOTES: (continued)

5. Publication IPC-7351 may have alternate designs.
6. Solder mask tolerances between and around signal pads can vary based on board fabrication site.

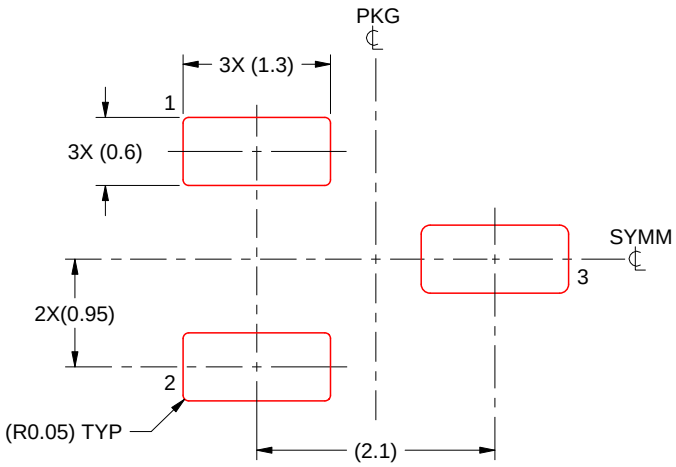

SOLDER PASTE EXAMPLE
BASED ON 0.125 THICK STENCIL
SCALE:15X

4214838/F 08/2024

NOTES: (continued)

7. Laser cutting apertures with trapezoidal walls and rounded corners may offer better paste release. IPC-7525 may have alternate design recommendations.
8. Board assembly site may have different recommendations for stencil design.

PACKAGE OUTLINE

LPG0003A

TO-92 - 5.05 mm max height

TRANSISTOR OUTLINE

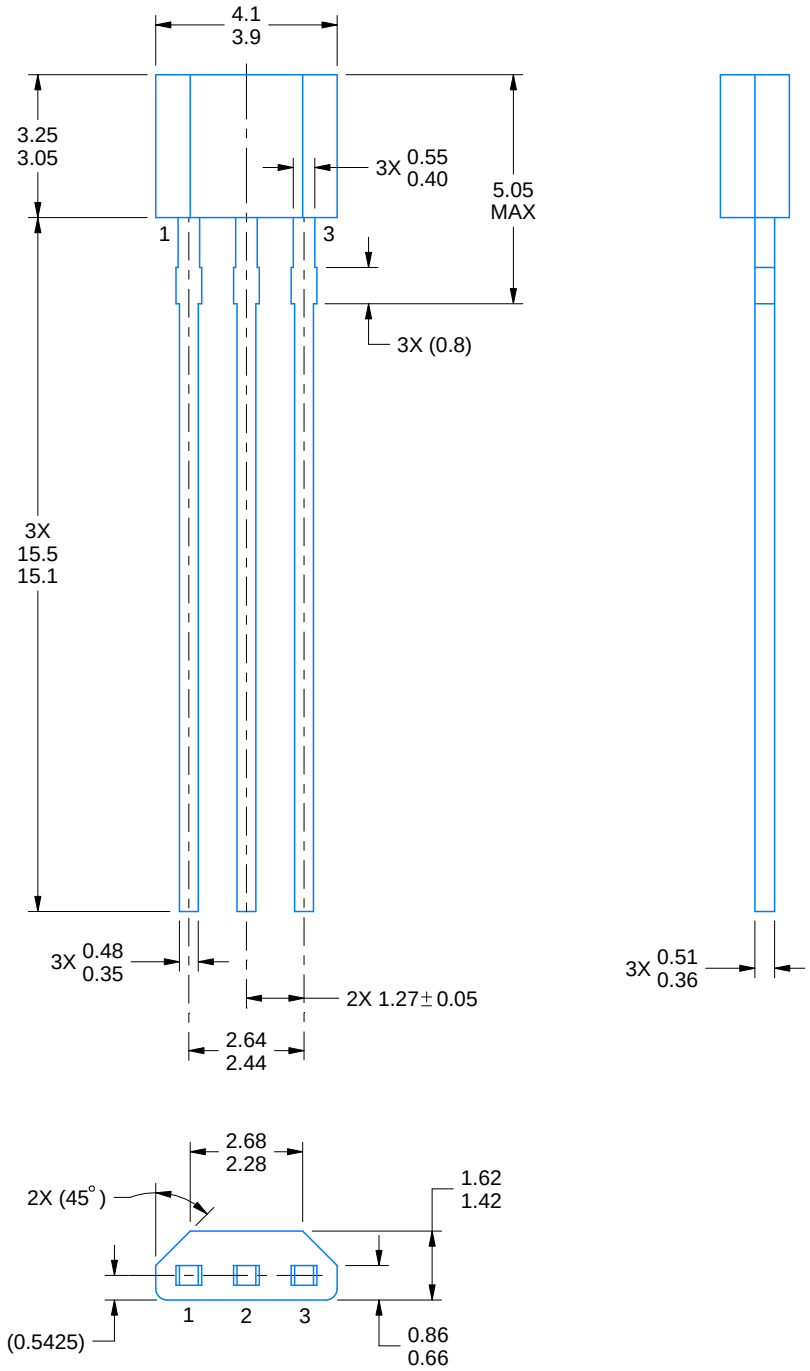

4221343/C 01/2018

NOTES:

1. All linear dimensions are in millimeters. Any dimensions in parenthesis are for reference only. Dimensioning and tolerancing per ASME Y14.5M.
2. This drawing is subject to change without notice.

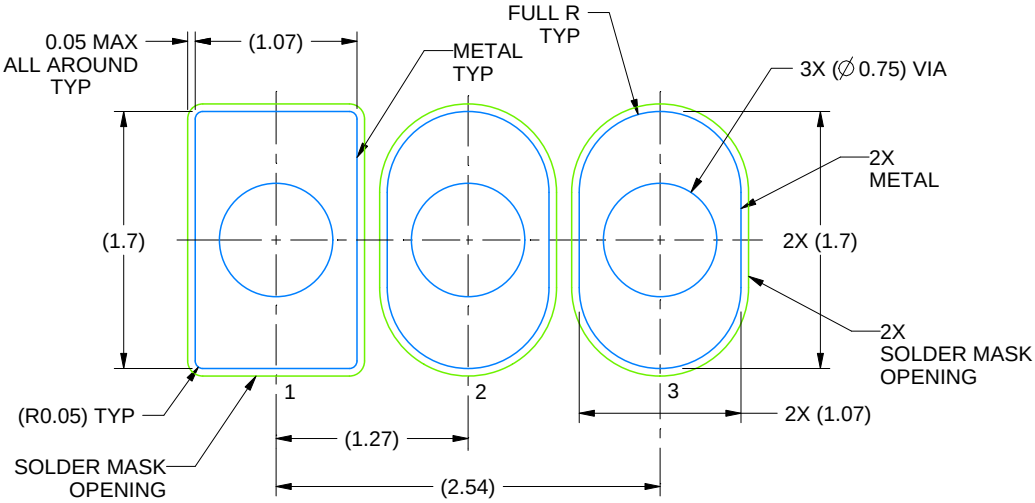

LAND PATTERN EXAMPLE
NON-SOLDER MASK DEFINED
SCALE:20X

4221343/C 01/2018

TRANSISTOR OUTLINE

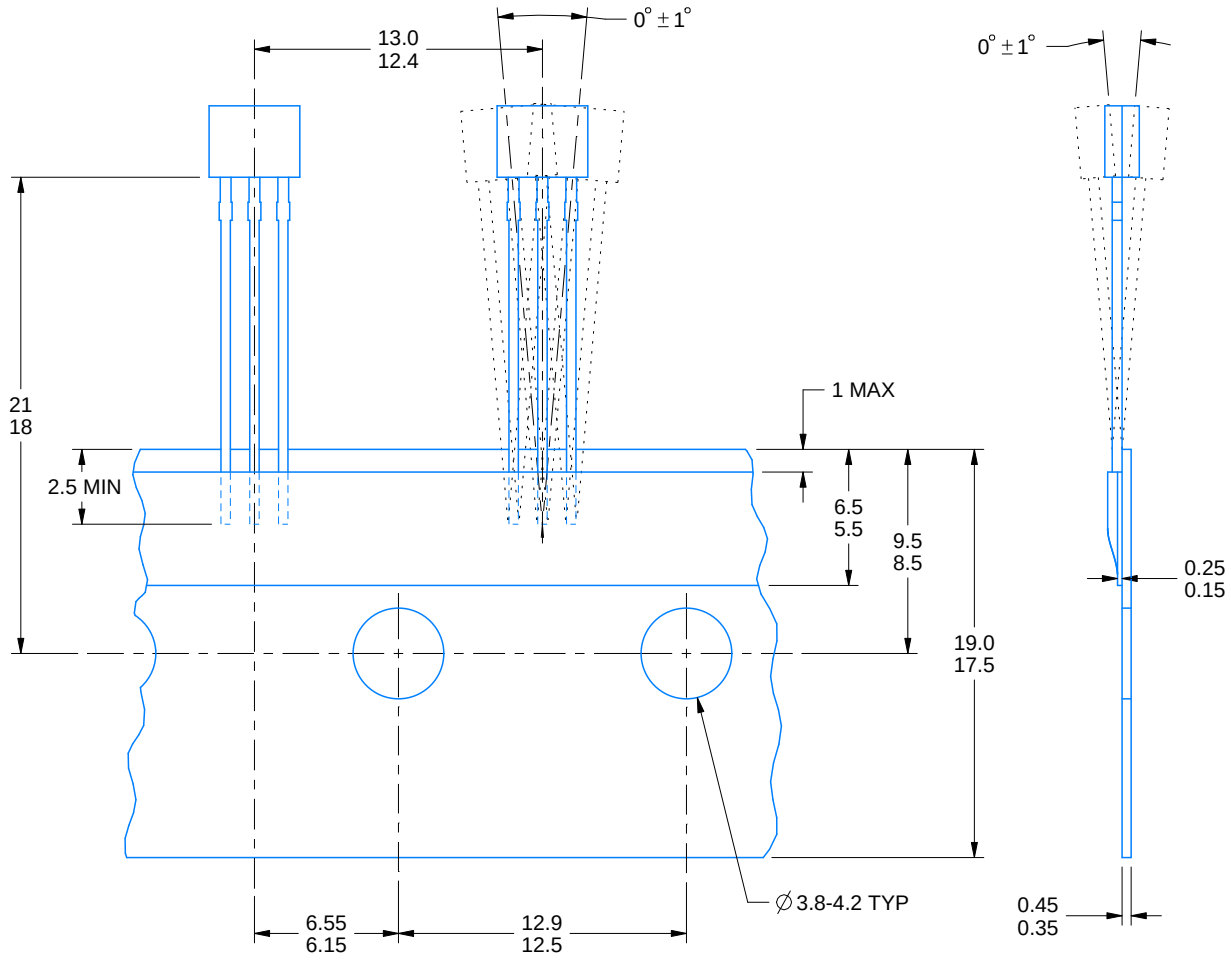

4221343/C 01/2018

GENERIC PACKAGE VIEW

DMR 4

X2SON - 0.4 mm max height

1.1 x 1.4, 0.5 mm pitch

PLASTIC SMALL OUTLINE - NO LEAD

This image is a representation of the package family, actual package may vary.
Refer to the product data sheet for package details.

4229480/A

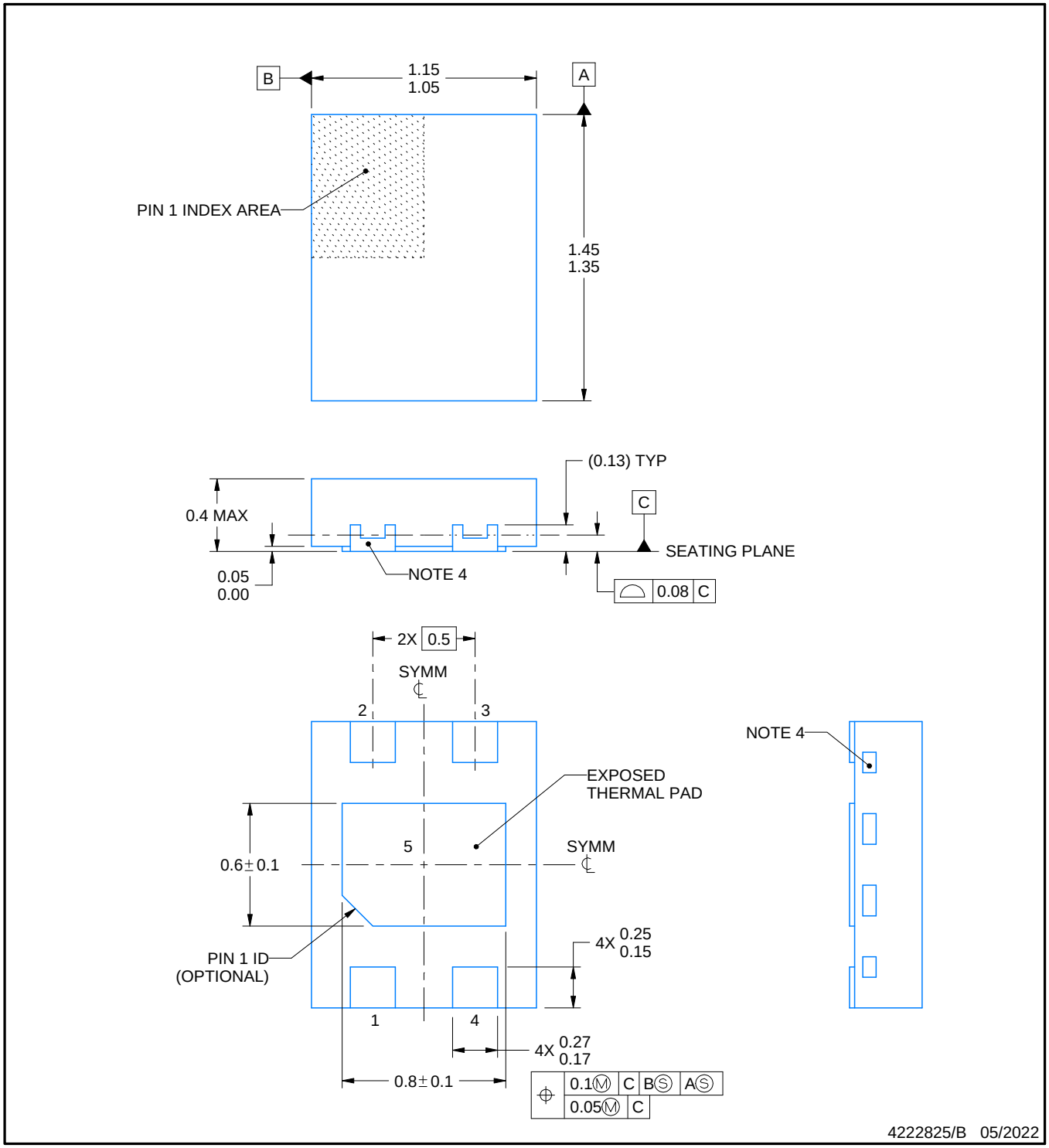

NOTES:

1. All linear dimensions are in millimeters. Any dimensions in parenthesis are for reference only. Dimensioning and tolerancing per ASME Y14.5M.
2. This drawing is subject to change without notice.
3. The package thermal pad must be soldered to the printed circuit board for thermal and mechanical performance.
4. Quantity and shape of side wall metal may vary.

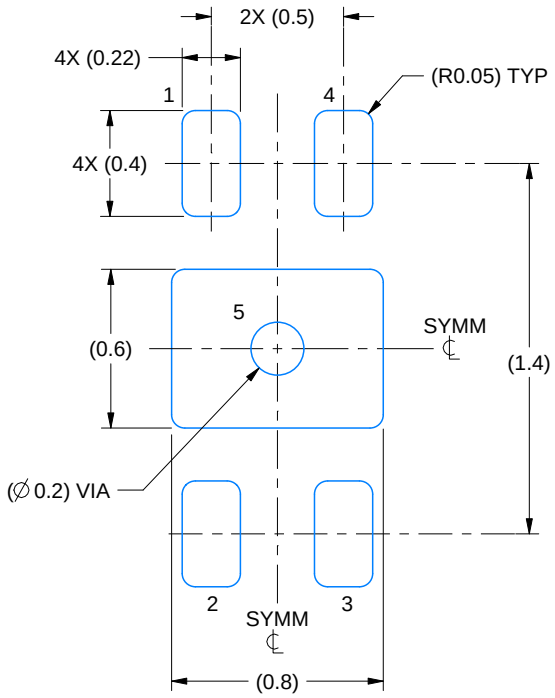

LAND PATTERN EXAMPLE
SCALE:35X

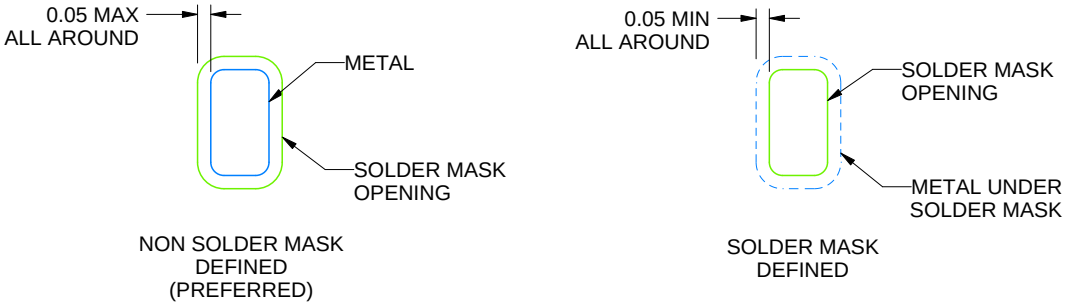

SOLDER MASK DETAILS

4222825/B 05/2022

NOTES: (continued)

5. This package is designed to be soldered to a thermal pad on the board. For more information, see Texas Instruments literature number SLUA271 (www.ti.com/lit/slua271).
6. Vias are optional depending on application, refer to device data sheet. If all or some are implemented, recommended via locations are shown. It is recommended that vias under paste be filled, plugged or tented.

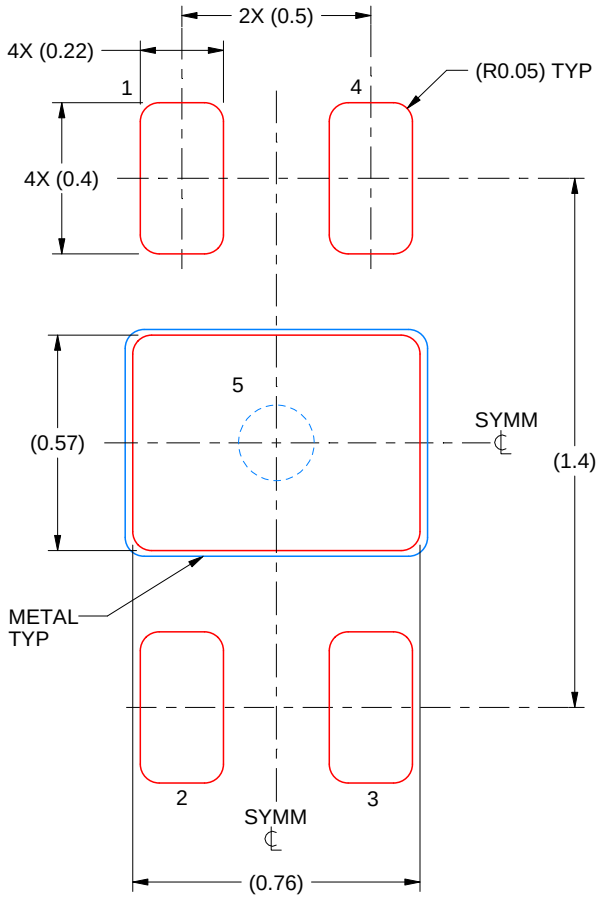

SOLDER PASTE EXAMPLE
BASED ON 0.1 mm THICK STENCIL

EXPOSED PAD 5:
90% PRINTED SOLDER COVERAGE BY AREA
SCALE:50X

4222825/B 05/2022

NOTES: (continued)

7. Laser cutting apertures with trapezoidal walls and rounded corners may offer better paste release. IPC-7525 may have alternate design recommendations.

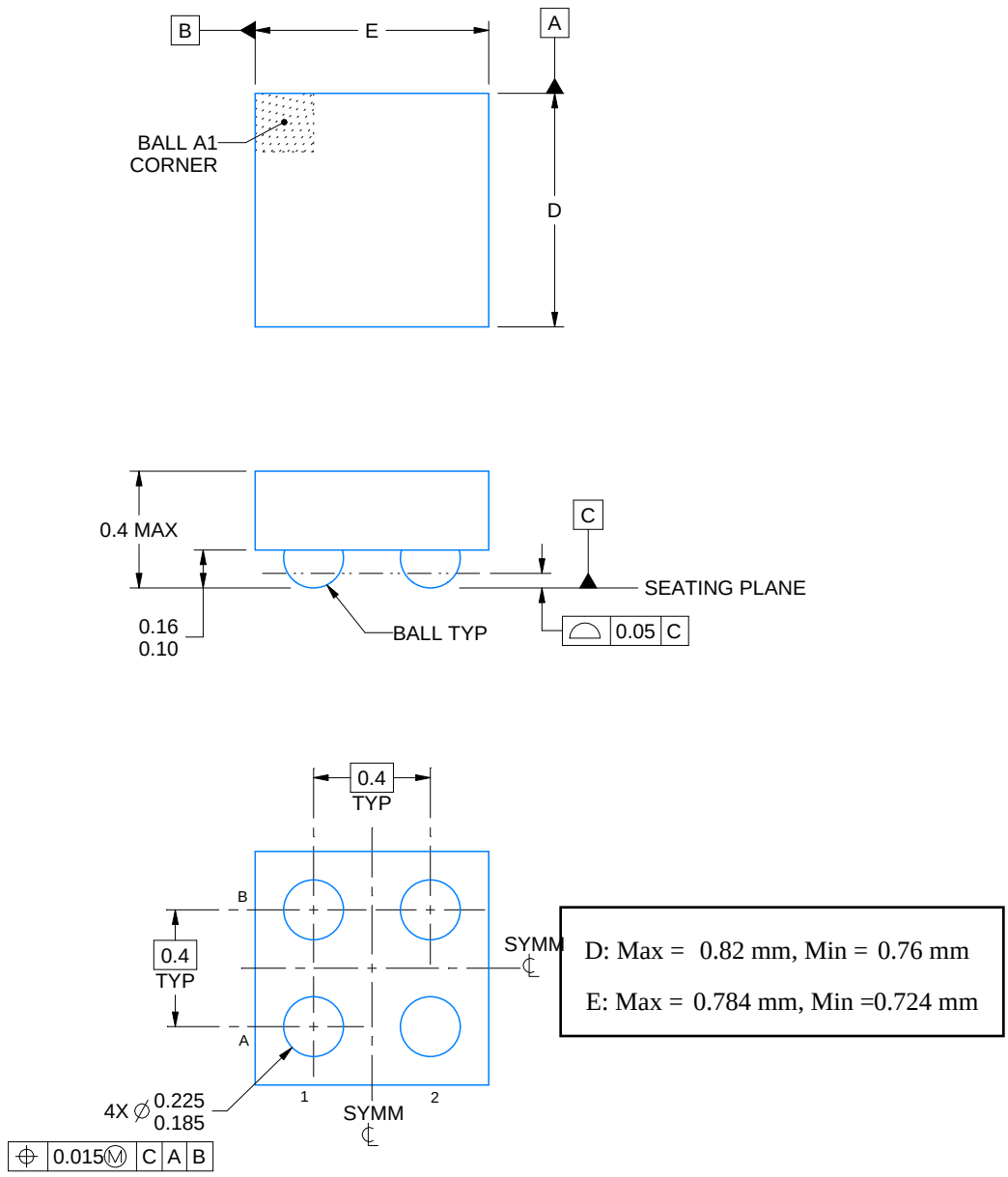

4224051/A 11/2017

NOTES:

1. All linear dimensions are in millimeters. Any dimensions in parenthesis are for reference only. Dimensioning and tolerancing per ASME Y14.5M.
2. This drawing is subject to change without notice.

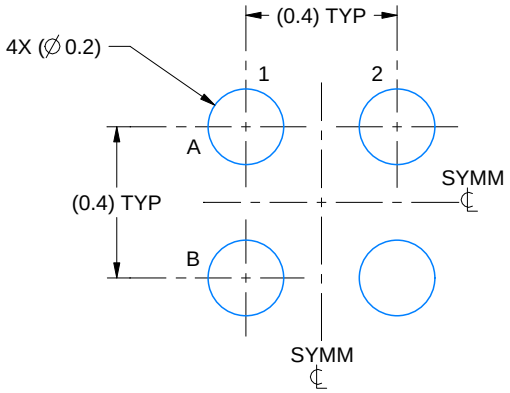

LAND PATTERN EXAMPLE
EXPOSED METAL SHOWN
SCALE: 50X

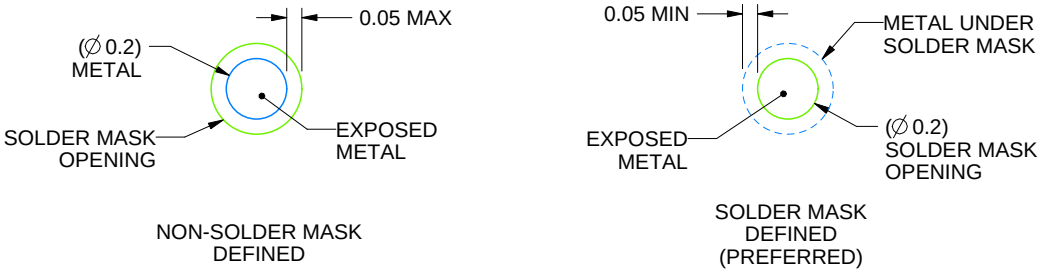

SOLDER MASK DETAILS
NOT TO SCALE

4224051/A 11/2017

NOTES: (continued)

3. Final dimensions may vary due to manufacturing tolerance considerations and also routing constraints.
   See Texas Instruments Literature No. SNVA009 (www.ti.com/lit/snva009).

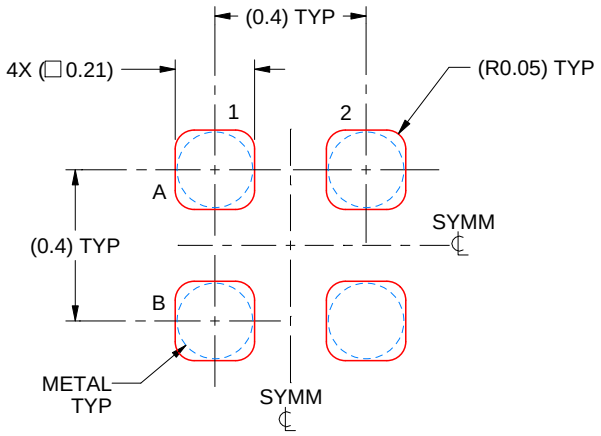

SOLDER PASTE EXAMPLE
BASED ON 0.075 mm THICK STENCIL
SCALE: 50X

4224051/A 11/2017

NOTES: (continued)

4. Laser cutting apertures with trapezoidal walls and rounded corners may offer better paste release.

IMPORTANT NOTICE AND DISCLAIMER

TI PROVIDES TECHNICAL AND RELIABILITY DATA (INCLUDING DATA SHEETS), DESIGN RESOURCES (INCLUDING REFERENCE DESIGNS), APPLICATION OR OTHER DESIGN ADVICE, WEB TOOLS, SAFETY INFORMATION, AND OTHER RESOURCES “AS IS” AND WITH ALL FAULTS, AND DISCLAIMS ALL WARRANTIES, EXPRESS AND IMPLIED, INCLUDING WITHOUT LIMITATION ANY IMPLIED WARRANTIES OF MERCHANTABILITY, FITNESS FOR A PARTICULAR PURPOSE OR NON-INFRINGEMENT OF THIRD PARTY INTELLECTUAL PROPERTY RIGHTS.

These resources are intended for skilled developers designing with TI products. You are solely responsible for (1) selecting the appropriate TI products for your application, (2) designing, validating and testing your application, and (3) ensuring your application meets applicable standards, and any other safety, security, regulatory or other requirements.

These resources are subject to change without notice. TI grants you permission to use these resources only for development of an application that uses the TI products described in the resource. Other reproduction and display of these resources is prohibited. No license is granted to any other TI intellectual property right or to any third party intellectual property right. TI disclaims responsibility for, and you will fully indemnify TI and its representatives against, any claims, damages, costs, losses, and liabilities arising out of your use of these resources.

TI’s products are provided subject to TI’s Terms of Sale or other applicable terms available either on ti.com or provided in conjunction with such TI products. TI’s provision of these resources does not expand or otherwise alter TI’s applicable warranties or warranty disclaimers for TI products.

TI objects to and rejects any additional or different terms you may have proposed.

Mailing Address: Texas Instruments, Post Office Box 655303, Dallas, Texas 75265
Copyright © 2025, Texas Instruments Incorporated