TLV809
3-Pin Supply Voltage Supervisor

1 Features

- Precision supply voltage monitor: 2.5 V, 3 V, 3.3 V, 5 V
- Power-on reset generator with a fixed delay time of 200 ms
- Supply current: 9 µA (typical)
- Temperature range: –40°C to +85°C
- 3-Pin SOT-23 package
- Pin-for-pin compatible with the MAX809

2 Applications

- Factory automation
- Portable and battery-powered equipment
- Set-top boxes
- Servers
- Appliances
- Electricity meters
- Building automation

3 Description

The TLV809 family of supervisory circuits provides circuit initialization and timing supervision, primarily for digital signal processors (DSPs) and processor-based systems. The newer TLV809E device is a pin-to-pin compatible alternative.

During power-on, $\overline{\text{RESET}}$ is asserted when the supply voltage (V_{DD}) becomes greater than 1.1 V. Thereafter, the supervisory circuit monitors V_{DD} and keeps $\overline{\text{RESET}}$ active as long as V_{DD} remains below the threshold voltage, V_{IT}. An internal timer delays the return of the output to the inactive state (high) to ensure proper system reset. The delay time ($t_{d(typ)}$ = 200 ms) starts after V_{DD} rises above the threshold voltage, V_{IT}. When the supply voltage drops below the V_{IT} threshold voltage, the output becomes active (low) again. No external components are required. All devices in this family have a fixed sense-threshold voltage (V_{IT}) set by an internal voltage divider.

This product family is designed for supply voltages of 2.5 V, 3 V, 3.3 V, and 5 V. The circuits are available in a 3-pin SOT-23 package. The TLV809 devices are characterized for operation over a temperature range of –40°C to +85°C.

Device Information

PART NUMBER	PACKAGE (1)	BODY SIZE (NOM)
TLV809	SOT-23 (3), DBV	2.90 mm × 1.60 mm
	SOT-23 (3), DBZ	2.92 mm × 1.30 mm

(1) For all available packages, see the orderable addendum at the end of the data sheet.

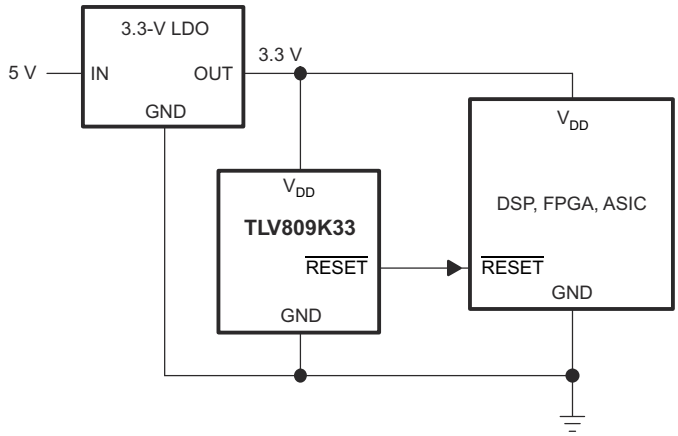

Typical Application

An IMPORTANT NOTICE at the end of this data sheet addresses availability, warranty, changes, use in safety-critical applications, intellectual property matters and other important disclaimers. PRODUCTION DATA.

Table of Contents

1 Features....1
2 Applications....1
3 Description....1
4 Revision History....2
5 Device Comparison....4
6 Pin Configuration and Functions....4
Pin Functions....4
7 Specifications....5
7.1 Absolute Maximum Ratings....5
7.2 ESD Ratings....5
7.3 Recommended Operating Conditions....5
7.4 Thermal Information....5
7.5 Electrical Characteristics....6
7.6 Timing Requirements....6
7.7 Switching Characteristics....6
7.8 Timing Diagrams....7
7.9 Typical Characteristics....8
8 Detailed Description....9
8.1 Overview....9
8.2 Functional Block Diagram....9
8.3 Feature Description....9
8.4 Device Functional Modes....9
9 Application and Implementation....10
9.1 Application Information....10
9.2 Typical Application....11
10 Power Supply Recommendations....12
11 Layout....12
11.1 Layout Guidelines....12
11.2 Layout Example....12
12 Device and Documentation Support....13
12.1 Documentation Support....13
12.2 Support Resources....13
12.3 Trademarks....13
12.4 Electrostatic Discharge Caution....13
12.5 Glossary....13
13 Mechanical, Packaging, and Orderable Information....13

4 Revision History

Changes from Revision E (November 2020) to Revision F (December 2020) — **Page**

- Corrected missed change of VDD from 7 to 6.5 in *Absolute Maximum Ratings* for all other pins and in note2... 5

Changes from Revision D (March 2016) to Revision E (November 2020) — **Page**

- Updated the numbering format for tables, figures, and cross-references throughout the document....1
- Updated the *Description* section....1
- Updated *Device Comparison*....4
- Changed VDD from 7 to 6.5 in *Absolute Maximum Ratings*....5
- Changed V_{OL} @ 500µA from 0.2 to 0.3 in *Electrical Characteristics*....6
- Changed t_w pulse duration from 3 to 10µs in *Timing Requirements*....6
- Changed t_{PHL} from 1 to 10µs in *Switching Characteristics*....6
- Deleted figure for Minimum Pulse Duration At V_{DD} in Typical Characteristics....8
- Changed figure from Pulse Duration to V_{OL}, I_{OL} in the Typical Application Section....11

Changes from Revision C (February 2012) to Revision D (March 2016) — **Page**

- Added *Device Information* table, *Pin Configuration and Functions* section, *ESD Ratings* table, *Overview* section, *Feature Description* section, *Device Functional Modes* section, *Application and Implementation* section, *Power Supply Recommendations* section, *Layout* section, *Device and Documentation Support* section, and *Mechanical, Packaging, and Orderable Information* section....1
- Deleted pinout drawing from page 1....1
- Changed *Description* section: added third paragraph and changed section wording for clarity....1
- Deleted soldering temperature parameter from *Absolute Maximum Ratings* table....5
- Changed I_{DD} parameter test conditions in *Electrical Characteristics* table....6

Changes from Revision B (September 2010) to Revision C (February 2012) — **Page**

- Updated ordering information....4

Copyright © 2020 Texas Instruments Incorporated

Changes from Revision A (July 2010) to Revision B (September 2010) **Page**

- Updated document format to current standards..... 1
- Added DBZ package to pinout figure..... 1
- Added *Thermal Information* table..... 5
- Changed Figure 7-3 8

5 Device Comparison

Table 5-1. Device Threshold Options

PRODUCT	THRESHOLD VOLTAGE
TLV809J25	2.25 V
TLV809L30	2.64 V
TLV809K33	2.93 V
TLV809I50	4.55 V

Table 5-2. Device Family Comparison

DEVICE	FUNCTION
TLV803	Open-Drain, $\overline{\text{RESET}}$ Output
TLV809	Push-Pull, $\overline{\text{RESET}}$ Output
TLV810	Push-Pull, RESET Output

6 Pin Configuration and Functions

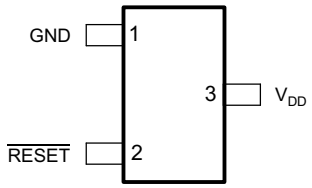

Figure 6-1. DBV, DBZ Packages
3-Pin SOT-23
Top View

Pin Functions

PIN		I/O	DESCRIPTION
NO.	NAME		
1	GND	—	Ground pin. This pin must be connected to ground with a low-impedance connection.
2	$\overline{\text{RESET}}$	O	$\overline{\text{RESET}}$ pin. $\overline{\text{RESET}}$ is an active low signal, asserting when V_{DD} is below the threshold voltage. When V_{DD} rises above V_{IT}, there is a delay time (t_d) until $\overline{\text{RESET}}$ deasserts. $\overline{\text{RESET}}$ is a push-pull output stage.
3	V_{DD}	I	Supply voltage pin. A 0.1-µF ceramic capacitor from this pin to ground is recommended to improve stability of the threshold voltage.

Copyright © 2020 Texas Instruments Incorporated

7 Specifications

7.1 Absolute Maximum Ratings

over operating free-air temperature range (unless otherwise noted)[1]

		MIN	MAX	UNIT
V_{DD}	Supply voltage[2]		6.5	V
	All other pins[2]	–0.3	6.5	
I_{OL}	Maximum low output current		5	mA
I_{OH}	Maximum high output current		–5	mA
I_{IK}	Input clamp current (V_I < 0 or V_I > V_{DD})		±20	mA
I_{OK}	Output clamp current (V_O < 0 or V_O > V_{DD})		±20	mA
T_A	Operating free-air temperature	–40	85	°C
T_{stg}	Storage temperature	–65	150	°C

(1) Stresses beyond those listed under *Absolute Maximum Ratings* may cause permanent damage to the device. These are stress ratings only, which do not imply functional operation of the device at these or any other conditions beyond those indicated under *Recommended Operating Conditions*. Exposure to absolute-maximum-rated conditions for extended periods may affect device reliability.

(2) All voltage values are with respect to GND. For reliable operation, do not operate the device at 6.5 V for more than t = 1000h continuously.

7.2 ESD Ratings

			VALUE	UNIT
$V_{(ESD)}$	Electrostatic discharge	Human-body model (HBM), per ANSI/ESDA/JEDEC JS-001[1]	±2000	V
		Charged-device model (CDM), per JEDEC specification JESD22-C101[2]	±500	

(1) JEDEC document JEP155 states that 500-V HBM allows safe manufacturing with a standard ESD control process.

(2) JEDEC document JEP157 states that 250-V CDM allows safe manufacturing with a standard ESD control process.

7.3 Recommended Operating Conditions

at specified temperature range (unless otherwise noted)

		MIN	NOM	MAX	UNIT
V_{DD}	Supply voltage	2		6	V
C_{IN}	V_{DD} bypass capacitor		0.1		µF
T_A	Operating free-air temperature range	–40		85	°C

7.4 Thermal Information

THERMAL METRIC[1]		TLV809		UNIT
		DBV (SOT-23)	DBZ (SOT-23)	
		3 PINS	3 PINS	
$R_{\theta JA}$	Junction-to-ambient thermal resistance	242.1	286.9	°C/W
$R_{\theta JC(top)}$	Junction-to-case (top) thermal resistance	213.0	105.6	°C/W
$R_{\theta JB}$	Junction-to-board thermal resistance	123.4	124.4	°C/W
ψ_{JT}	Junction-to-top characterization parameter	45.7	25.8	°C/W
ψ_{JB}	Junction-to-board characterization parameter	130.9	107.9	°C/W
$R_{\theta JC(bot)}$	Junction-to-case (bottom) thermal resistance	—	—	°C/W

(1) For more information about traditional and new thermal metrics, see the *Semiconductor and IC Package Thermal Metrics* application report, SPRA953.

Copyright © 2020 Texas Instruments Incorporated

7.5 Electrical Characteristics

at T_A = –40°C to +85°C (unless otherwise noted); typical values are at T_A = 25°C

PARAMETER			TEST CONDITIONS	MIN	TYP	MAX	UNIT
V_{OH}	High-level output voltage		V_{DD} = 2.5 V to 6 V, I_{OH} = –500 µA	V_{DD} – 0.2			V
			V_{DD} = 3.3 V, I_{OH} = –2 mA	V_{DD} – 0.4			
			V_{DD} = 6 V, I_{OH} = –4 mA	V_{DD} – 0.4			
V_{OL}	Low-level output voltage		V_{DD} = 2 V to 6 V, I_{OH} = 500 µA			0.3	V
			V_{DD} = 3.3 V, I_{OH} = 2 mA			0.4	
			V_{DD} = 6 V, I_{OH} = 4 mA			0.4	
	Power-up reset voltage(1)		V_{DD} ≥ 1.1 V, I_{OL} = 50 µA			0.2	V
V_{IT-}	Negative-going input threshold voltage(2)	TLV809J25	T_A = –40°C to +85°C	2.20	2.25	2.30	V
		TLV809L30		2.58	2.64	2.70	
		TLV809K33		2.87	2.93	2.99	
		TLV809I50		4.45	4.55	4.65	
V_{hys}	Hysteresis	TLV809J25			30		mV
		TLV809L30			35		
		TLV809K33			40		
		TLV809I50			60		
I_{DD}	Supply current		V_{DD} = 2 V, RESET is unconnected		9	12	µA
			V_{DD} = 6 V, RESET is unconnected		20	25	
C_I	Input capacitance		V_I = 0 V to V_{DD}		5		pF

(1) The lowest supply voltage at which $\overline{RESET}$ becomes active. $t_{r,\ VDD}$ ≥ 15 ms/V.
(2) To ensure best stability of the threshold voltage, place a bypass capacitor (0.1-µF ceramic) near the supply pins.

7.6 Timing Requirements

at T_A = 25°C, R_L = 1 MΩ, and C_L = 50 pF

			MIN	NOM	MAX	UNIT
t_w	Pulse duration at V_{DD}	V_{DD} = V_{IT-} + 0.2 V, V_{DD} = V_{IT-} – 0.2 V	10			µs

7.7 Switching Characteristics

at T_A = 25°C, R_L = 1 MΩ, and C_L = 50 pF

PARAMETER			TEST CONDITIONS	MIN	TYP	MAX	UNIT
t_d	Delay time		V_{DD} ≥ V_{IT-} + 0.2 V; see Figure 7-1	120	200	280	ms
t_{PHL}	Propagation (delay) time, high-to-low-level output	V_{DD} to $\overline{RESET}$ delay	V_{IL} = V_{IT-} – 0.2 V, V_{IH} = V_{IT-} + 0.2 V		10		µs

Copyright © 2020 Texas Instruments Incorporated

7.8 Timing Diagrams

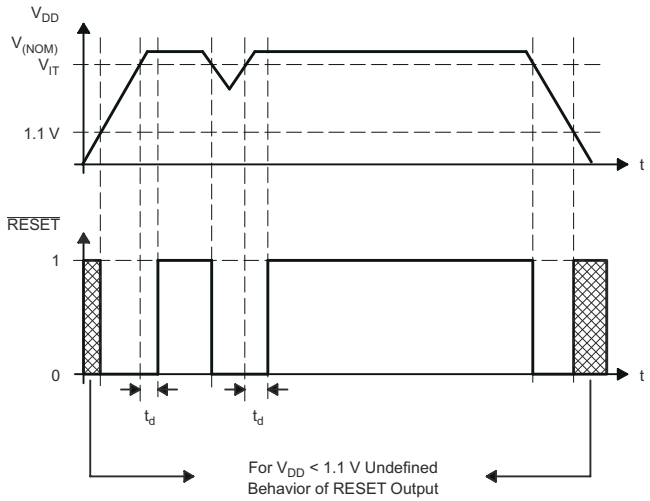

Figure 7-1. Timing Diagram

7.9 Typical Characteristics

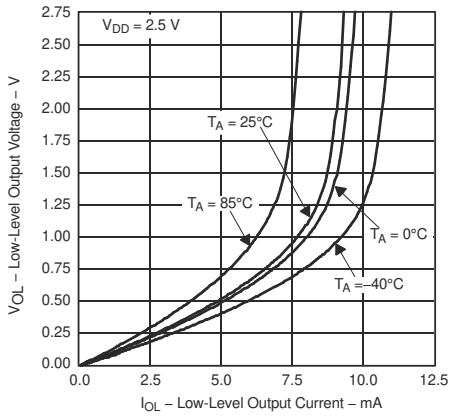

Figure 7-2. Low-Level Output Voltage vs Low-Level Output Current

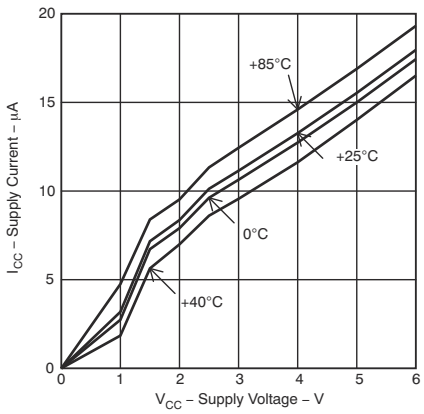

Figure 7-3. Supply Current vs Supply Voltage

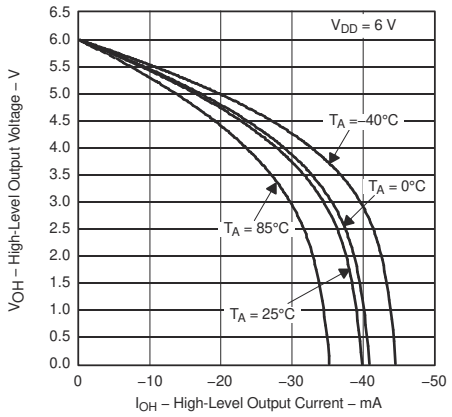

Figure 7-4. High-Level Output Voltage vs High-Level Output Current

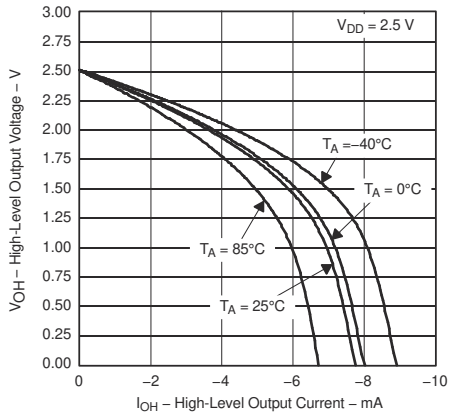

Figure 7-5. High-Level Output Voltage vs High-Level Output Current

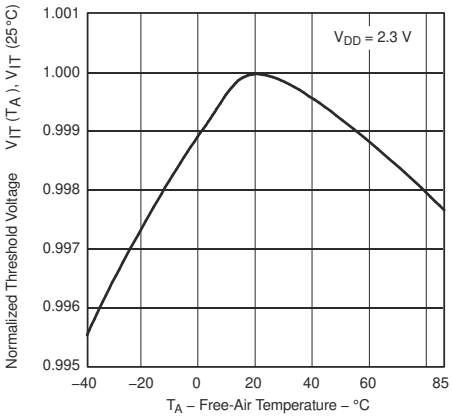

Figure 7-6. Normalized Input Threshold Voltage vs Free-Air Temperature at V_{DD}

Copyright © 2020 Texas Instruments Incorporated

8 Detailed Description

8.1 Overview

The TLV809 is a 3-pin voltage detector with fixed detection thresholds, an active-low push-pull $\overline{\text{RESET}}$ output, and an internal timer to delay the $\overline{\text{RESET}}$ signal when V_{DD} rises above the threshold voltage.

8.2 Functional Block Diagram

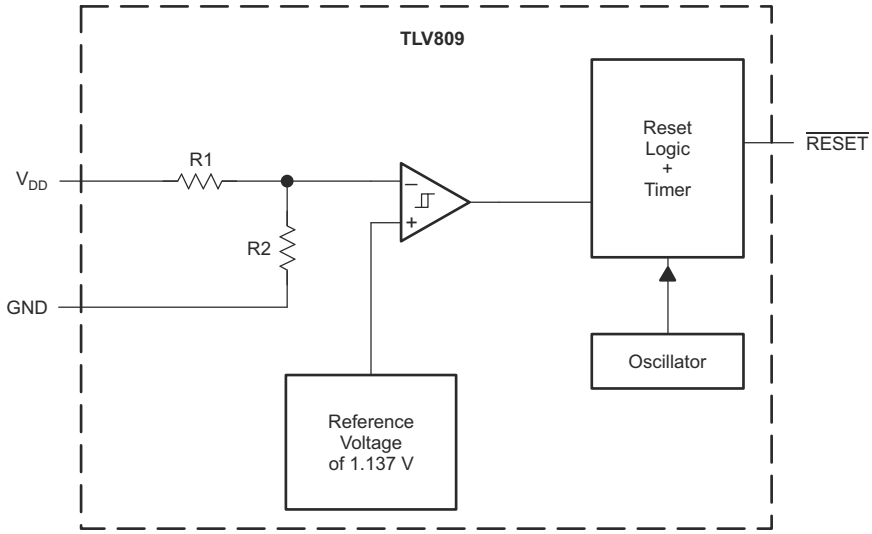

8.3 Feature Description

8.3.1 Supply Voltage Monitoring

The device actively monitors its supply voltage to ensure that the power supply is above a certain voltage threshold.

The device offers various fixed threshold options that are approximately 10% below several standard supply voltages (2.5 V, 3.0 V, 3.3 V, 5.0 V).

8.3.2 $\overline{\text{RESET}}$ Output

The device has a $\overline{\text{RESET}}$ output to indicate the status of the input power supply.

$\overline{\text{RESET}}$ is an active low signal, asserting when V_{DD} is below the threshold voltage. When V_{DD} rises above V_{IT}, there is a delay time (t_d) until $\overline{\text{RESET}}$ deasserts.

$\overline{\text{RESET}}$ is a push-pull output stage.

8.4 Device Functional Modes

When the input supply voltage is in its recommended operating range (2 V to 6 V), the device is in a normal operational mode. In normal operational mode the device monitors V_{DD} for undervoltage detection.

When the input supply is below its recommended operating range, the device is in shutdown mode and therefore tries to assert $\overline{\text{RESET}}$.

Copyright © 2020 Texas Instruments Incorporated

9 Application and Implementation

Note

Information in the following applications sections is not part of the TI component specification, and TI does not warrant its accuracy or completeness. TI's customers are responsible for determining suitability of components for their purposes, as well as validating and testing their design implementation to confirm system functionality.

9.1 Application Information

9.1.1 V_{DD} Transient Rejection

The device has built-in rejection of fast transients on the V_{DD} pin. The rejection of transients depends on both the duration and the amplitude of the transient. The amplitude of the transient is measured from the bottom of the transient to the negative threshold voltage of the device, as shown in Figure 9-1.

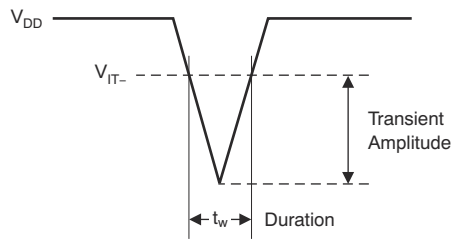

Figure 9-1. Voltage Transient Measurement

The device does not respond to transients that are fast duration and low amplitude or long duration and small amplitude. Transients meeting or longer than the t_w specified in the Section 7.6 section triggers a reset.

9.1.2 Reset During Power-Up and Power-Down

The device output is valid when V_{DD} is greater than 1.1 V. When V_{DD} is less than 1.1 V, the output transistor turns off and becomes high impedance. The voltage on the $\overline{RESET}$ pin rises to the voltage level connected to the pullup resistor. Figure 9-2 shows a typical waveform for power-up.

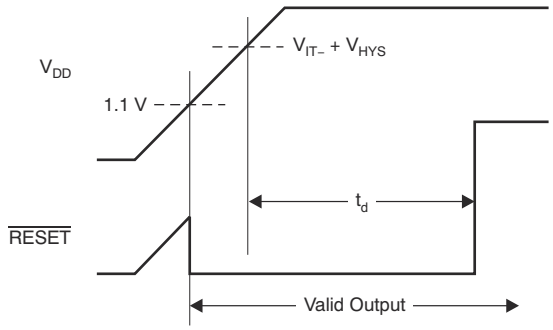

Figure 9-2. Power-Up Response

Copyright © 2020 Texas Instruments Incorporated

9.2 Typical Application

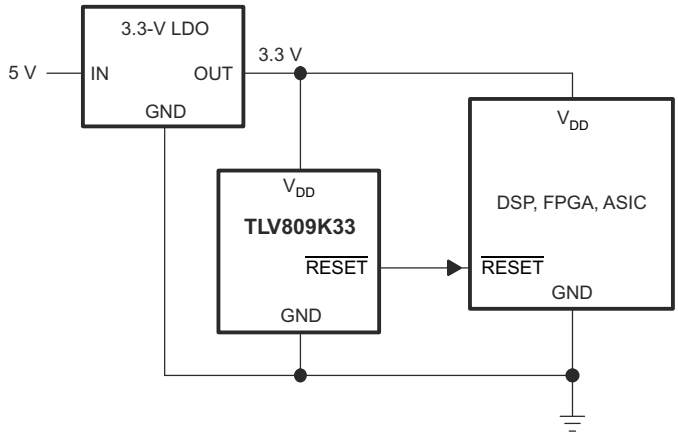

Figure 9-3. Monitoring a 3.3-V Supply

9.2.1 Design Requirements

The device must ensure that the supply voltage does not drop more than 15% below 3.3 V. If the supply voltage falls below 3.3 V – 15%, then the load must be disabled.

9.2.2 Detailed Design Procedure

The TLV809K33 is selected to ensure that V_{DD} is greater than 2.87 V when the load is enabled.

9.2.3 Application Curve

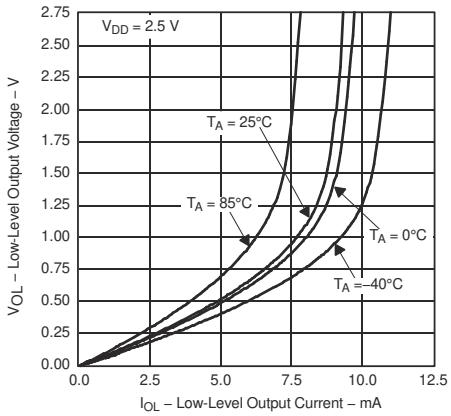

Figure 9-4. Low-Level Output Voltage vs Low-Level Output Current

10 Power Supply Recommendations

Power the device with a low-impedance supply. A 0.1-µF bypass capacitor from V_{DD} to ground is recommended.

11 Layout

11.1 Layout Guidelines

Place the device near the load for the input power supply, with a low-impedance connection to the power supply pins of the load to sense the supply voltage.

11.2 Layout Example

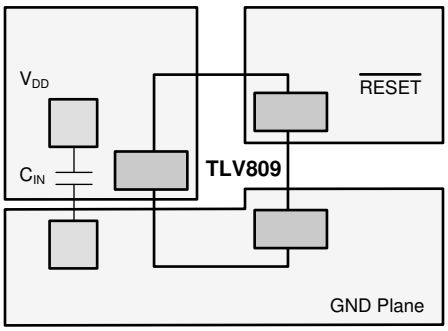

Figure 11-1. Example Layout

Copyright © 2020 Texas Instruments Incorporated

12 Device and Documentation Support

12.1 Documentation Support

12.1.1 Related Documentation

TLV803 Data Sheet, SBVS157

TLV810 Data Sheet, SBVS158

12.2 Support Resources

TI E2E™ support forums are an engineer's go-to source for fast, verified answers and design help — straight from the experts. Search existing answers or ask your own question to get the quick design help you need.

Linked content is provided "AS IS" by the respective contributors. They do not constitute TI specifications and do not necessarily reflect TI's views; see TI's Terms of Use.

12.3 Trademarks

TI E2E™ is a trademark of Texas Instruments.
All trademarks are the property of their respective owners.

12.4 Electrostatic Discharge Caution

This integrated circuit can be damaged by ESD. Texas Instruments recommends that all integrated circuits be handled with appropriate precautions. Failure to observe proper handling and installation procedures can cause damage.

ESD damage can range from subtle performance degradation to complete device failure. Precision integrated circuits may be more susceptible to damage because very small parametric changes could cause the device not to meet its published specifications.

12.5 Glossary

TI Glossary This glossary lists and explains terms, acronyms, and definitions.

13 Mechanical, Packaging, and Orderable Information

The following pages include mechanical, packaging, and orderable information. This information is the most current data available for the designated devices. This data is subject to change without notice and revision of this document. For browser-based versions of this data sheet, refer to the left-hand navigation.

PACKAGING INFORMATION

Orderable part number	Status (1)	Material type (2)	Package | Pins	Package qty | Carrier	RoHS (3)	Lead finish/ Ball material (4)	MSL rating/ Peak reflow (5)	Op temp (°C)	Part marking (6)
TLV809I50DBVR	Active	Production	SOT-23 (DBV) | 3	3000 | LARGE T&R	Yes	NIPDAU	Level-1-260C-UNLIM	-40 to 85	VTBI
TLV809I50DBVR.A	Active	Production	SOT-23 (DBV) | 3	3000 | LARGE T&R	Yes	NIPDAU	Level-1-260C-UNLIM	-40 to 85	VTBI
TLV809I50DBVT	Active	Production	SOT-23 (DBV) | 3	250 | SMALL T&R	Yes	NIPDAU	Level-1-260C-UNLIM	-40 to 85	VTBI
TLV809I50DBVT.A	Active	Production	SOT-23 (DBV) | 3	250 | SMALL T&R	Yes	NIPDAU	Level-1-260C-UNLIM	-40 to 85	VTBI
TLV809I50DBZR	Active	Production	SOT-23 (DBZ) | 3	3000 | LARGE T&R	Yes	NIPDAU | SN	Level-1-260C-UNLIM	-40 to 85	BCMV
TLV809I50DBZR.A	Active	Production	SOT-23 (DBZ) | 3	3000 | LARGE T&R	Yes	NIPDAU	Level-1-260C-UNLIM	-40 to 85	BCMV
TLV809I50DBZT	Active	Production	SOT-23 (DBZ) | 3	250 | SMALL T&R	Yes	NIPDAU | SN	Level-1-260C-UNLIM	-40 to 85	BCMV
TLV809I50DBZT.A	Active	Production	SOT-23 (DBZ) | 3	250 | SMALL T&R	Yes	NIPDAU	Level-1-260C-UNLIM	-40 to 85	BCMV
TLV809J25DBVR	Active	Production	SOT-23 (DBV) | 3	3000 | LARGE T&R	Yes	NIPDAU | NIPDAU	Level-1-260C-UNLIM	-40 to 85	VTCI
TLV809J25DBVR.A	Active	Production	SOT-23 (DBV) | 3	3000 | LARGE T&R	Yes	NIPDAU	Level-1-260C-UNLIM	-40 to 85	VTCI
TLV809J25DBVT	Active	Production	SOT-23 (DBV) | 3	250 | SMALL T&R	Yes	NIPDAU | NIPDAU	Level-1-260C-UNLIM	-40 to 85	VTCI
TLV809J25DBVT.A	Active	Production	SOT-23 (DBV) | 3	250 | SMALL T&R	Yes	NIPDAU	Level-1-260C-UNLIM	-40 to 85	VTCI
TLV809J25DBZR	Active	Production	SOT-23 (DBZ) | 3	3000 | LARGE T&R	Yes	NIPDAU | SN	Level-1-260C-UNLIM	-40 to 85	BCMT
TLV809J25DBZR.A	Active	Production	SOT-23 (DBZ) | 3	3000 | LARGE T&R	Yes	NIPDAU	Level-1-260C-UNLIM	-40 to 85	BCMT
TLV809J25DBZT	Active	Production	SOT-23 (DBZ) | 3	250 | SMALL T&R	Yes	NIPDAU | SN | NIPDAUAG	Level-1-260C-UNLIM	-40 to 85	BCMT
TLV809J25DBZT.A	Active	Production	SOT-23 (DBZ) | 3	250 | SMALL T&R	Yes	NIPDAU	Level-1-260C-UNLIM	-40 to 85	BCMT
TLV809K33DBVR	Active	Production	SOT-23 (DBV) | 3	3000 | LARGE T&R	Yes	NIPDAU | NIPDAU	Level-1-260C-UNLIM	-40 to 85	VTRI
TLV809K33DBVR.A	Active	Production	SOT-23 (DBV) | 3	3000 | LARGE T&R	Yes	NIPDAU	Level-1-260C-UNLIM	-40 to 85	VTRI
TLV809K33DBVT	Active	Production	SOT-23 (DBV) | 3	250 | SMALL T&R	Yes	NIPDAU	Level-1-260C-UNLIM	-40 to 85	VTRI
TLV809K33DBVT.A	Active	Production	SOT-23 (DBV) | 3	250 | SMALL T&R	Yes	NIPDAU	Level-1-260C-UNLIM	-40 to 85	VTRI
TLV809K33DBZR	Active	Production	SOT-23 (DBZ) | 3	3000 | LARGE T&R	Yes	NIPDAU | SN	Level-1-260C-UNLIM	-40 to 85	BCMX
TLV809K33DBZR.A	Active	Production	SOT-23 (DBZ) | 3	3000 | LARGE T&R	Yes	NIPDAU	Level-1-260C-UNLIM	-40 to 85	BCMX
TLV809K33DBZT	Active	Production	SOT-23 (DBZ) | 3	250 | SMALL T&R	Yes	NIPDAU | SN	Level-1-260C-UNLIM	-40 to 85	BCMX
TLV809K33DBZT.A	Active	Production	SOT-23 (DBZ) | 3	250 | SMALL T&R	Yes	NIPDAU	Level-1-260C-UNLIM	-40 to 85	BCMX
TLV809L30DBVR	Active	Production	SOT-23 (DBV) | 3	3000 | LARGE T&R	Yes	NIPDAU	Level-1-260C-UNLIM	-40 to 85	VTXI
TLV809L30DBVR.A	Active	Production	SOT-23 (DBV) | 3	3000 | LARGE T&R	Yes	NIPDAU	Level-1-260C-UNLIM	-40 to 85	VTXI
TLV809L30DBVT	Active	Production	SOT-23 (DBV) | 3	250 | SMALL T&R	Yes	NIPDAU	Level-1-260C-UNLIM	-40 to 85	VTXI
TLV809L30DBVT.A	Active	Production	SOT-23 (DBV) | 3	250 | SMALL T&R	Yes	NIPDAU	Level-1-260C-UNLIM	-40 to 85	VTXI

Orderable part number	Status (1)	Material type (2)	Package | Pins	Package qty | Carrier	RoHS (3)	Lead finish/ Ball material (4)	MSL rating/ Peak reflow (5)	Op temp (°C)	Part marking (6)
TLV809L30DBZR	Active	Production	SOT-23 (DBZ) | 3	3000 | LARGE T&R	Yes	NIPDAU | SN	Level-1-260C-UNLIM	-40 to 85	BCMZ
TLV809L30DBZR.A	Active	Production	SOT-23 (DBZ) | 3	3000 | LARGE T&R	Yes	NIPDAU	Level-1-260C-UNLIM	-40 to 85	BCMZ
TLV809L30DBZT	Active	Production	SOT-23 (DBZ) | 3	250 | SMALL T&R	Yes	SN	Level-1-260C-UNLIM	-40 to 85	BCMZ
TLV809L30DBZT.A	Active	Production	SOT-23 (DBZ) | 3	250 | SMALL T&R	Yes	SN	Level-1-260C-UNLIM	-40 to 85	BCMZ

(1) **Status:** For more details on status, see our product life cycle.

(2) **Material type:** When designated, preproduction parts are prototypes/experimental devices, and are not yet approved or released for full production. Testing and final process, including without limitation quality assurance, reliability performance testing, and/or process qualification, may not yet be complete, and this item is subject to further changes or possible discontinuation. If available for ordering, purchases will be subject to an additional waiver at checkout, and are intended for early internal evaluation purposes only. These items are sold without warranties of any kind.

(3) **RoHS values:** Yes, No, RoHS Exempt. See the TI RoHS Statement for additional information and value definition.

(4) **Lead finish/Ball material:** Parts may have multiple material finish options. Finish options are separated by a vertical ruled line. Lead finish/Ball material values may wrap to two lines if the finish value exceeds the maximum column width.

(5) **MSL rating/Peak reflow:** The moisture sensitivity level ratings and peak solder (reflow) temperatures. In the event that a part has multiple moisture sensitivity ratings, only the lowest level per JEDEC standards is shown. Refer to the shipping label for the actual reflow temperature that will be used to mount the part to the printed circuit board.

(6) **Part marking:** There may be an additional marking, which relates to the logo, the lot trace code information, or the environmental category of the part.

Multiple part markings will be inside parentheses. Only one part marking contained in parentheses and separated by a "~" will appear on a part. If a line is indented then it is a continuation of the previous line and the two combined represent the entire part marking for that device.

Important Information and Disclaimer: The information provided on this page represents TI's knowledge and belief as of the date that it is provided. TI bases its knowledge and belief on information provided by third parties, and makes no representation or warranty as to the accuracy of such information. Efforts are underway to better integrate information from third parties. TI has taken and continues to take reasonable steps to provide representative and accurate information but may not have conducted destructive testing or chemical analysis on incoming materials and chemicals. TI and TI suppliers consider certain information to be proprietary, and thus CAS numbers and other limited information may not be available for release.

In no event shall TI's liability arising out of such information exceed the total purchase price of the TI part(s) at issue in this document sold by TI to Customer on an annual basis.

TAPE AND REEL INFORMATION

REEL DIMENSIONS

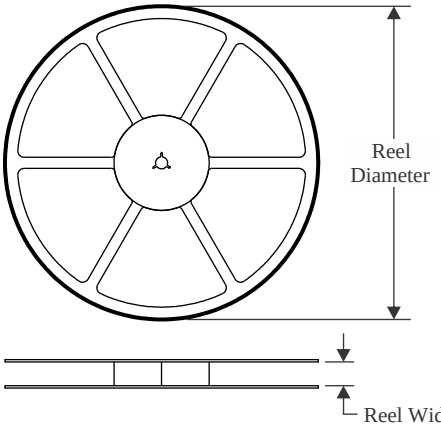

TAPE DIMENSIONS

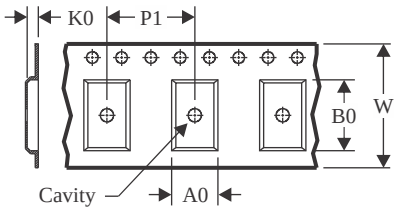

A0	Dimension designed to accommodate the component width
B0	Dimension designed to accommodate the component length
K0	Dimension designed to accommodate the component thickness
W	Overall width of the carrier tape
P1	Pitch between successive cavity centers

QUADRANT ASSIGNMENTS FOR PIN 1 ORIENTATION IN TAPE

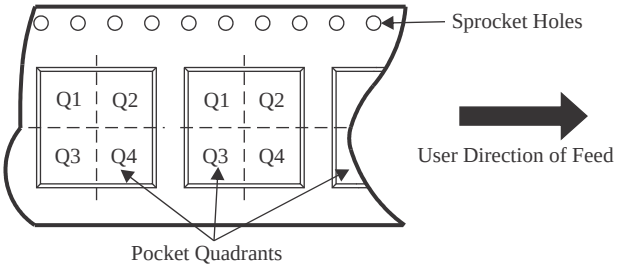

*All dimensions are nominal

Device	Package Type	Package Drawing	Pins	SPQ	Reel Diameter (mm)	Reel Width W1 (mm)	A0 (mm)	B0 (mm)	K0 (mm)	P1 (mm)	W (mm)	Pin1 Quadrant
TLV809I50DBVR	SOT-23	DBV	3	3000	178.0	9.0	3.3	3.2	1.4	4.0	8.0	Q3
TLV809I50DBVT	SOT-23	DBV	3	250	178.0	9.0	3.3	3.2	1.4	4.0	8.0	Q3
TLV809I50DBZR	SOT-23	DBZ	3	3000	180.0	8.4	2.9	3.35	1.35	4.0	8.0	Q3
TLV809I50DBZR	SOT-23	DBZ	3	3000	178.0	9.0	3.15	2.77	1.22	4.0	8.0	Q3
TLV809I50DBZT	SOT-23	DBZ	3	250	180.0	8.4	2.9	3.35	1.35	4.0	8.0	Q3
TLV809I50DBZT	SOT-23	DBZ	3	250	178.0	9.0	3.15	2.77	1.22	4.0	8.0	Q3
TLV809J25DBVR	SOT-23	DBV	3	3000	178.0	9.0	3.3	3.2	1.4	4.0	8.0	Q3
TLV809J25DBVT	SOT-23	DBV	3	250	178.0	9.0	3.3	3.2	1.4	4.0	8.0	Q3
TLV809J25DBZR	SOT-23	DBZ	3	3000	180.0	8.4	2.9	3.35	1.35	4.0	8.0	Q3
TLV809J25DBZT	SOT-23	DBZ	3	250	180.0	8.4	2.9	3.35	1.35	4.0	8.0	Q3
TLV809J25DBZT	SOT-23	DBZ	3	250	178.0	9.0	3.15	2.77	1.22	4.0	8.0	Q3
TLV809K33DBVR	SOT-23	DBV	3	3000	178.0	9.0	3.3	3.2	1.4	4.0	8.0	Q3
TLV809K33DBVT	SOT-23	DBV	3	250	178.0	9.0	3.3	3.2	1.4	4.0	8.0	Q3
TLV809K33DBZR	SOT-23	DBZ	3	3000	178.0	9.0	3.15	2.77	1.22	4.0	8.0	Q3
TLV809K33DBZR	SOT-23	DBZ	3	3000	180.0	8.4	2.9	3.35	1.35	4.0	8.0	Q3
TLV809K33DBZT	SOT-23	DBZ	3	250	178.0	9.0	3.15	2.77	1.22	4.0	8.0	Q3

Device	Package Type	Package Drawing	Pins	SPQ	Reel Diameter (mm)	Reel Width W1 (mm)	A0 (mm)	B0 (mm)	K0 (mm)	P1 (mm)	W (mm)	Pin1 Quadrant
TLV809K33DBZT	SOT-23	DBZ	3	250	180.0	8.4	2.9	3.35	1.35	4.0	8.0	Q3
TLV809L30DBVR	SOT-23	DBV	3	3000	178.0	9.0	3.3	3.2	1.4	4.0	8.0	Q3
TLV809L30DBVT	SOT-23	DBV	3	250	178.0	9.0	3.3	3.2	1.4	4.0	8.0	Q3
TLV809L30DBZR	SOT-23	DBZ	3	3000	178.0	9.0	3.15	2.77	1.22	4.0	8.0	Q3
TLV809L30DBZT	SOT-23	DBZ	3	250	178.0	9.0	3.15	2.77	1.22	4.0	8.0	Q3

TAPE AND REEL BOX DIMENSIONS

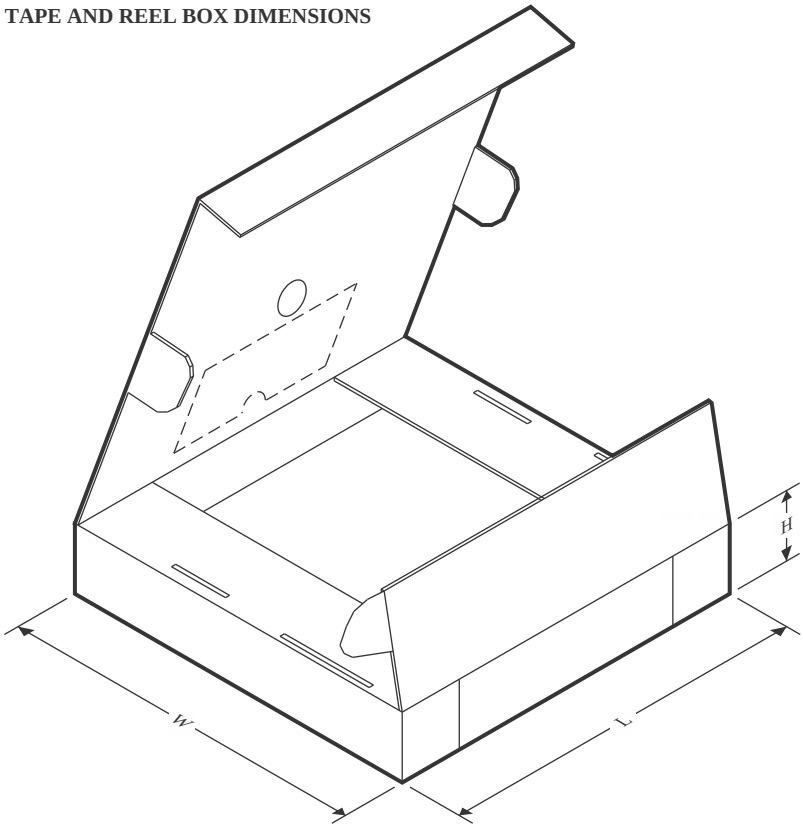

*All dimensions are nominal

Device	Package Type	Package Drawing	Pins	SPQ	Length (mm)	Width (mm)	Height (mm)
TLV809I50DBVR	SOT-23	DBV	3	3000	180.0	180.0	18.0
TLV809I50DBVT	SOT-23	DBV	3	250	180.0	180.0	18.0
TLV809I50DBZR	SOT-23	DBZ	3	3000	210.0	185.0	35.0
TLV809I50DBZR	SOT-23	DBZ	3	3000	180.0	180.0	18.0
TLV809I50DBZT	SOT-23	DBZ	3	250	210.0	185.0	35.0
TLV809I50DBZT	SOT-23	DBZ	3	250	180.0	180.0	18.0
TLV809J25DBVR	SOT-23	DBV	3	3000	180.0	180.0	18.0
TLV809J25DBVT	SOT-23	DBV	3	250	180.0	180.0	18.0
TLV809J25DBZR	SOT-23	DBZ	3	3000	210.0	185.0	35.0
TLV809J25DBZT	SOT-23	DBZ	3	250	210.0	185.0	35.0
TLV809J25DBZT	SOT-23	DBZ	3	250	180.0	180.0	18.0
TLV809K33DBVR	SOT-23	DBV	3	3000	180.0	180.0	18.0
TLV809K33DBVT	SOT-23	DBV	3	250	180.0	180.0	18.0
TLV809K33DBZR	SOT-23	DBZ	3	3000	180.0	180.0	18.0
TLV809K33DBZR	SOT-23	DBZ	3	3000	210.0	185.0	35.0
TLV809K33DBZT	SOT-23	DBZ	3	250	180.0	180.0	18.0
TLV809K33DBZT	SOT-23	DBZ	3	250	210.0	185.0	35.0
TLV809L30DBVR	SOT-23	DBV	3	3000	180.0	180.0	18.0

Device	Package Type	Package Drawing	Pins	SPQ	Length (mm)	Width (mm)	Height (mm)
TLV809L30DBVT	SOT-23	DBV	3	250	180.0	180.0	18.0
TLV809L30DBZR	SOT-23	DBZ	3	3000	180.0	180.0	18.0
TLV809L30DBZT	SOT-23	DBZ	3	250	180.0	180.0	18.0

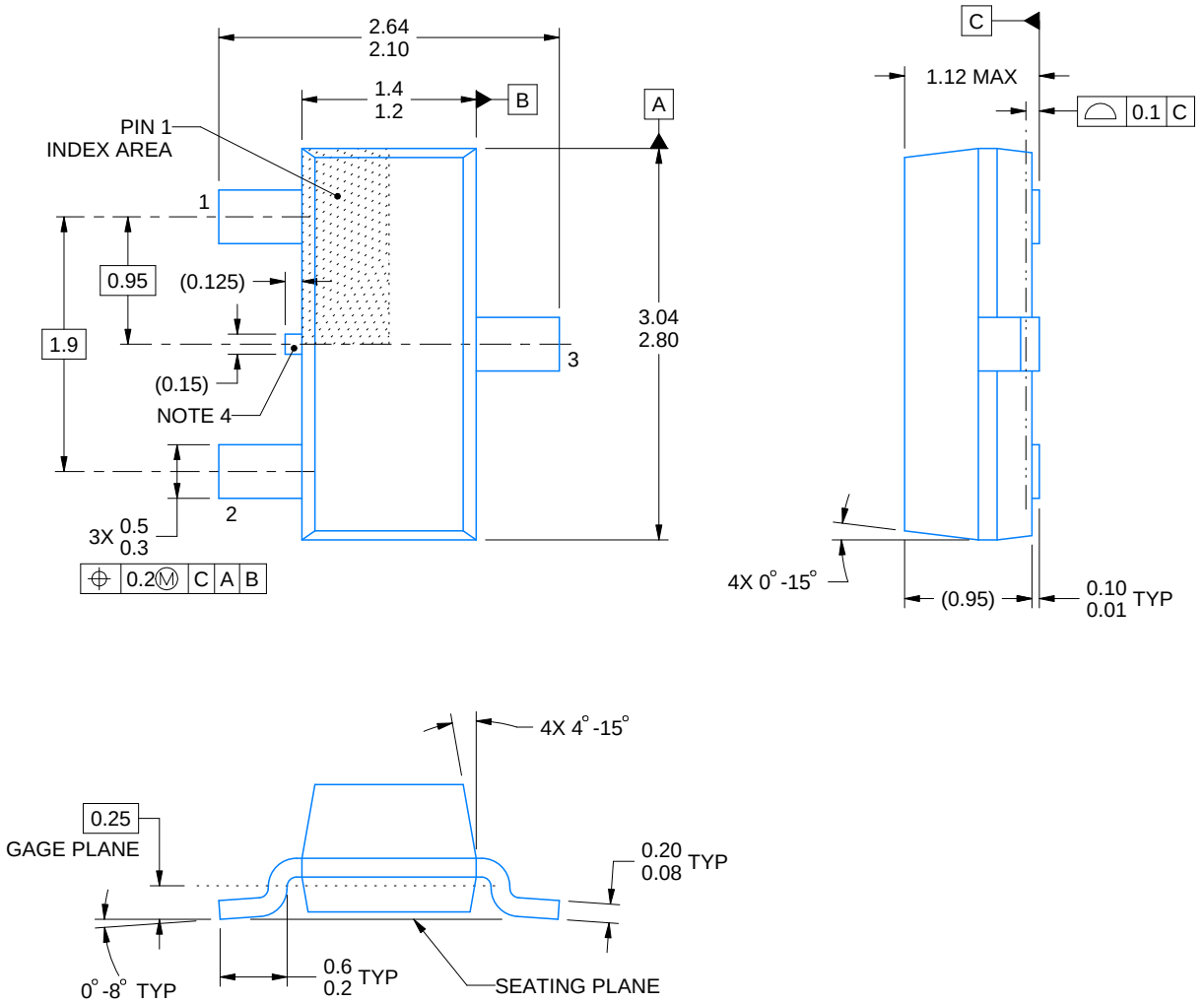

4214838/F 08/2024

NOTES:

1. All linear dimensions are in millimeters. Any dimensions in parenthesis are for reference only. Dimensioning and tolerancing per ASME Y14.5M.
2. This drawing is subject to change without notice.
3. Reference JEDEC registration TO-236, except minimum foot length.
4. Support pin may differ or may not be present.
5. Body dimensions do not include mold flash, protrusions, or gate burrs. Mold flash, protrusions, or gate burrs shall not exceed 0.25mm per side

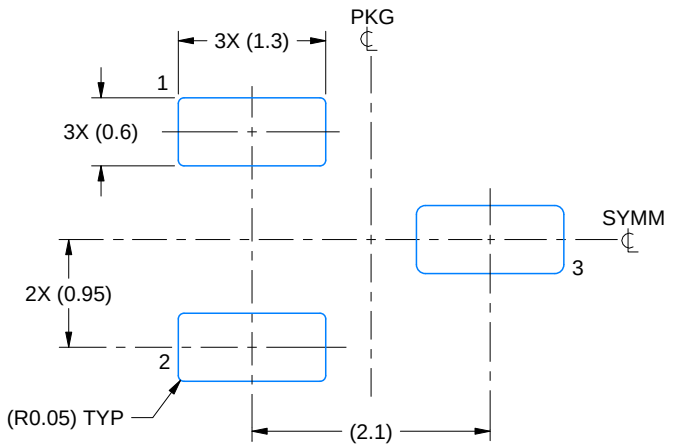

LAND PATTERN EXAMPLE
SCALE:15X

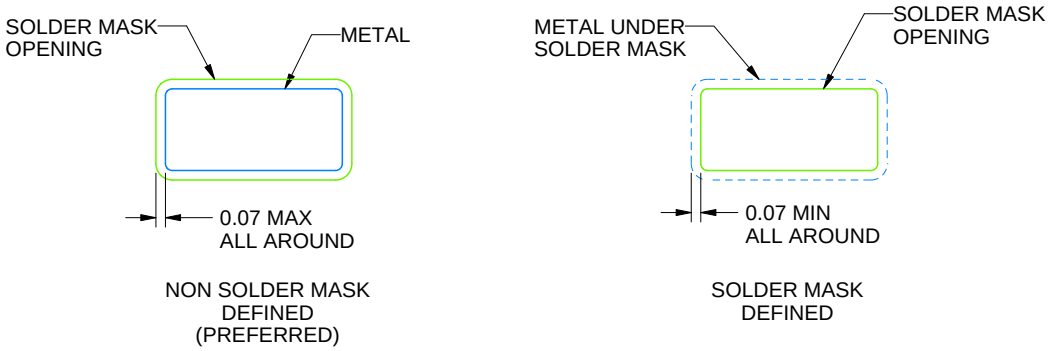

SOLDER MASK DETAILS

4214838/F 08/2024

NOTES: (continued)

5. Publication IPC-7351 may have alternate designs.
6. Solder mask tolerances between and around signal pads can vary based on board fabrication site.

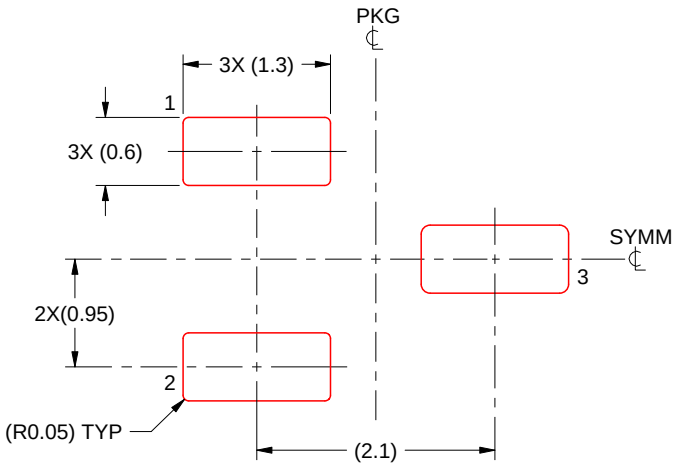

SOLDER PASTE EXAMPLE
BASED ON 0.125 THICK STENCIL
SCALE:15X

4214838/F 08/2024

NOTES: (continued)

7. Laser cutting apertures with trapezoidal walls and rounded corners may offer better paste release. IPC-7525 may have alternate design recommendations.
8. Board assembly site may have different recommendations for stencil design.

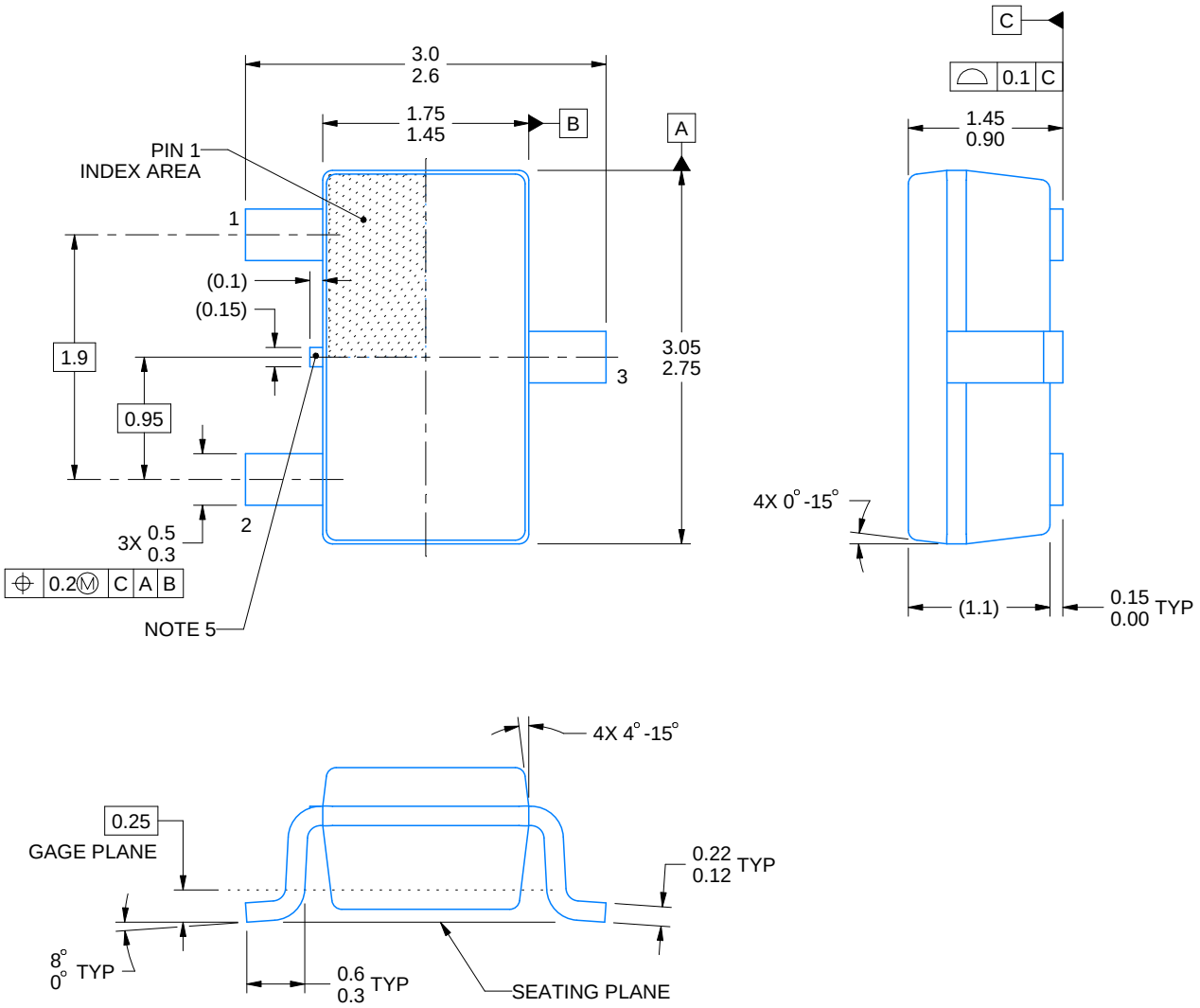

4220743/D 08/2024

NOTES:

1. All linear dimensions are in millimeters. Any dimensions in parenthesis are for reference only. Dimensioning and tolerancing per ASME Y14.5M.
2. This drawing is subject to change without notice.
3. Refernce JEDEC MO-178.
4. Body dimensions do not include mold flash, protrusions, or gate burrs. Mold flash, protrusions, or gate burrs shall not exceed 0.25 mm per side.
5. Support pin may differ or may not be present.

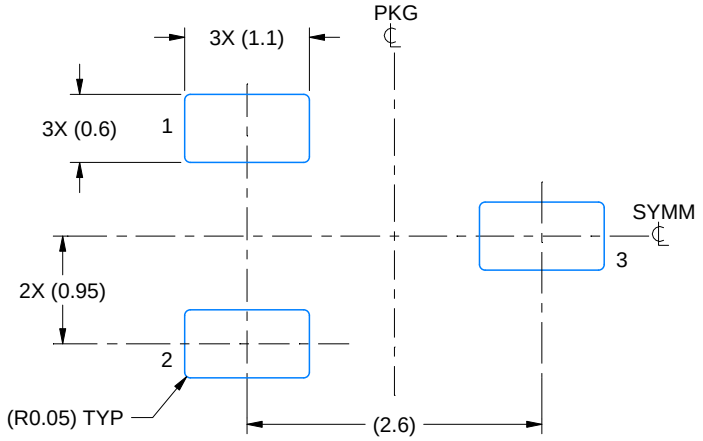

LAND PATTERN EXAMPLE
EXPOSED METAL SHOWN
SCALE:15X

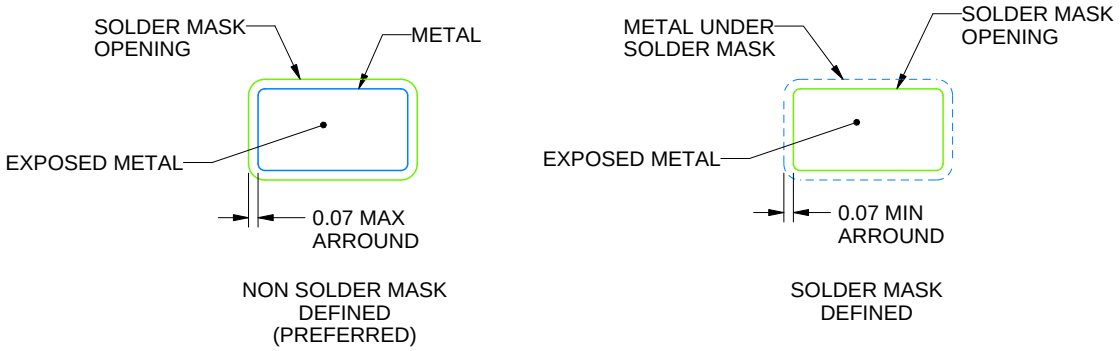

SOLDER MASK DETAILS

4220743/D 08/2024

NOTES: (continued)

6. Publication IPC-7351 may have alternate designs.
7. Solder mask tolerances between and around signal pads can vary based on board fabrication site.

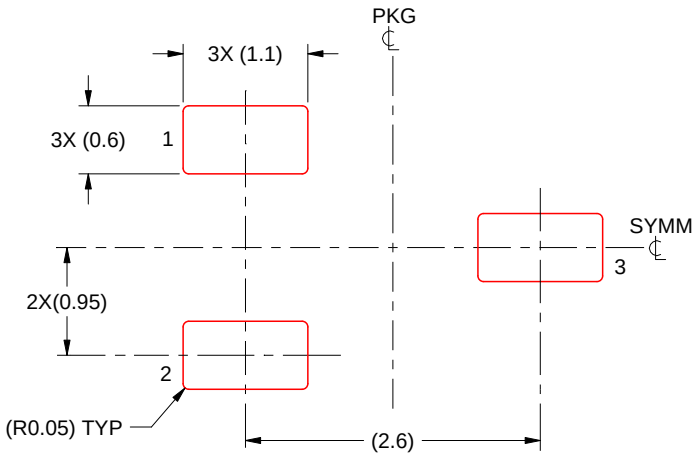

SOLDER PASTE EXAMPLE
BASED ON 0.125 mm THICK STENCIL
SCALE:15X

4220743/D 08/2024

NOTES: (continued)

8. Laser cutting apertures with trapezoidal walls and rounded corners may offer better paste release. IPC-7525 may have alternate design recommendations.
9. Board assembly site may have different recommendations for stencil design.

IMPORTANT NOTICE AND DISCLAIMER

TI PROVIDES TECHNICAL AND RELIABILITY DATA (INCLUDING DATA SHEETS), DESIGN RESOURCES (INCLUDING REFERENCE DESIGNS), APPLICATION OR OTHER DESIGN ADVICE, WEB TOOLS, SAFETY INFORMATION, AND OTHER RESOURCES “AS IS” AND WITH ALL FAULTS, AND DISCLAIMS ALL WARRANTIES, EXPRESS AND IMPLIED, INCLUDING WITHOUT LIMITATION ANY IMPLIED WARRANTIES OF MERCHANTABILITY, FITNESS FOR A PARTICULAR PURPOSE OR NON-INFRINGEMENT OF THIRD PARTY INTELLECTUAL PROPERTY RIGHTS.

These resources are intended for skilled developers designing with TI products. You are solely responsible for (1) selecting the appropriate TI products for your application, (2) designing, validating and testing your application, and (3) ensuring your application meets applicable standards, and any other safety, security, regulatory or other requirements.

These resources are subject to change without notice. TI grants you permission to use these resources only for development of an application that uses the TI products described in the resource. Other reproduction and display of these resources is prohibited. No license is granted to any other TI intellectual property right or to any third party intellectual property right. TI disclaims responsibility for, and you will fully indemnify TI and its representatives against, any claims, damages, costs, losses, and liabilities arising out of your use of these resources.

TI’s products are provided subject to TI’s Terms of Sale or other applicable terms available either on ti.com or provided in conjunction with such TI products. TI’s provision of these resources does not expand or otherwise alter TI’s applicable warranties or warranty disclaimers for TI products.

TI objects to and rejects any additional or different terms you may have proposed.

Mailing Address: Texas Instruments, Post Office Box 655303, Dallas, Texas 75265
Copyright © 2025, Texas Instruments Incorporated