- **Operating Range 2-V to 5.5-V V_{CC}**
- **Latch-Up Performance Exceeds 250 mA Per JESD 17**
- **ESD Protection Exceeds JESD 22**
  - **2000-V Human-Body Model (A114-A)**
  - **200-V Machine Model (A115-A)**
  - **1000-V Charged-Device Model (C101)**

SN54AHC05 . . . J OR W PACKAGE
SN74AHC05 . . . D, DB, DGV, N, OR PW PACKAGE
(TOP VIEW)

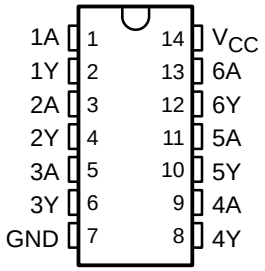

SN54AHC05 . . . FK PACKAGE
(TOP VIEW)

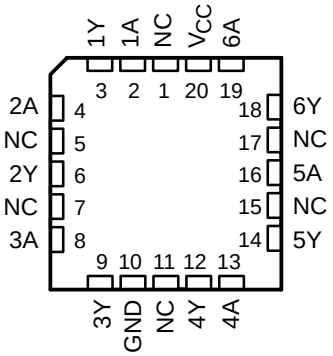

NC – No internal connection

description/ordering information

The ’AHC05 devices contain six independent inverters. These devices perform the Boolean function $Y = \overline{A}$.

The open-drain outputs require pullup resistors to perform correctly. They can be connected to other open-drain outputs to implement active-low wired-OR or active-high wired-AND functions.

ORDERING INFORMATION

T_A	PACKAGE†		ORDERABLE PART NUMBER	TOP-SIDE MARKING
–40°C to 85°C	PDIP – N	Tube	SN74AHC05N	SN74AHC05N
	SOIC – D	Tube	SN74AHC05D	AHC05
		Tape and reel	SN74AHC05DR	
	SSOP – DB	Tape and reel	SN74AHC05DBR	HA05
	TSSOP – PW	Tube	SN74AHC05PW	HA05
		Tape and reel	SN74AHC05PWR	
	TVSOP – DGV	Tape and reel	SN74AHC05DGVR	HA05
–55°C to 125°C	CDIP – J	Tube	SNJ54AHC05J	SNJ54AHC05J
	CFP – W	Tube	SNJ54AHC05W	SNJ54AHC05W
	LCCC – FK	Tube	SNJ54AHC05FK	SNJ54AHC05FK

† Package drawings, standard packing quantities, thermal data, symbolization, and PCB design guidelines are available at www.ti.com/sc/package.

Please be aware that an important notice concerning availability, standard warranty, and use in critical applications of Texas Instruments semiconductor products and disclaimers thereto appears at the end of this data sheet.

UNLESS OTHERWISE NOTED this document contains PRODUCTION DATA information current as of publication date. Products conform to specifications per the terms of Texas Instruments standard warranty. Production processing does not necessarily include testing of all parameters.

Copyright © 2003, Texas Instruments Incorporated

FUNCTION TABLE
(each inverter)

INPUT A	OUTPUT Y
H	L
L	H

logic diagram, each inverter (positive logic)

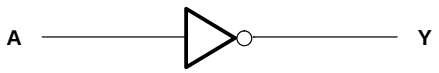

absolute maximum ratings over operating free-air temperature range (unless otherwise noted)†

Supply voltage range, V_{CC} . . . . . –0.5 V to 7 V
Input voltage range, V_I (see Note 1) . . . . . –0.5 V to 7 V
Output voltage range, V_O (see Note 1) . . . . . –0.5 V to V_{CC} + 0.5 V
Input clamp current, I_{IK} (V_I < 0) . . . . . –20 mA
Output clamp current, I_{OK} (V_O < 0 or V_O > V_{CC}) . . . . . ±20 mA
Continuous output current, I_O (V_O = 0 to V_{CC}) . . . . . ±25 mA
Continuous current through V_{CC} or GND . . . . . ±50 mA
Package thermal impedance, θ_{JA} (see Note 2): D package . . . . . 86°C/W
DB package . . . . . 96°C/W
DGV package . . . . . 127°C/W
N package . . . . . 80°C/W
PW package . . . . . 113°C/W
Storage temperature range, T_{stg} . . . . . –65°C to 150°C

† Stresses beyond those listed under “absolute maximum ratings” may cause permanent damage to the device. These are stress ratings only, and functional operation of the device at these or any other conditions beyond those indicated under “recommended operating conditions” is not implied. Exposure to absolute-maximum-rated conditions for extended periods may affect device reliability.

NOTES: 1. The input and output voltage ratings may be exceeded if the input and output current ratings are observed.
2. The package thermal impedance is calculated in accordance with JESD 51-7.

recommended operating conditions (see Note 3)

			SN54AHC05		SN74AHC05		UNIT
			MIN	MAX	MIN	MAX	
V_{CC}	Supply voltage		2	5.5	2	5.5	V
V_{IH}	High-level input voltage	V_{CC} = 2 V	1.5		1.5		V
		V_{CC} = 3 V	2.1		2.1		
		V_{CC} = 5.5 V	3.85		3.85		
V_{IL}	Low-level input voltage	V_{CC} = 2 V		0.5		0.5	V
		V_{CC} = 3 V		0.9		0.9	
		V_{CC} = 5.5 V		1.65		1.65	
V_I	Input voltage		0	5.5	0	5.5	V
V_O	Output voltage		0	V_{CC}	0	V_{CC}	V
I_{OL}	Low-level output current	V_{CC} = 2 V		50		50	μA
		V_{CC} = 3.3 V ± 0.3 V		4		4	mA
		V_{CC} = 5 V ± 0.5 V		8		8	
Δt/Δv	Input transition rise or fall rate	V_{CC} = 3.3 V ± 0.3 V		100		100	ns/V
		V_{CC} = 5 V ± 0.5 V		20		20	
T_A	Operating free-air temperature		–55	125	–40	85	°C

NOTE 3: All unused inputs of the device must be held at V_{CC} or GND to ensure proper device operation. Refer to the TI application report, *Implications of Slow or Floating CMOS Inputs*, literature number SCBA004.

electrical characteristics over recommended operating free-air temperature range (unless otherwise noted)

PARAMETER	TEST CONDITIONS	V_{CC}	T_A = 25°C			SN54AHC05		SN74AHC05		UNIT
			MIN	TYP	MAX	MIN	MAX	MIN	MAX	
V_{OL}	I_{OL} = 50 μA	2 V			0.1		0.1		0.1	V
		3 V			0.1		0.1		0.1	
		4.5 V			0.1		0.1		0.1	
	I_{OL} = 4 mA	3 V			0.36		0.5		0.44	
	I_{OL} = 8 mA	4.5 V			0.36		0.5		0.44	
I_I	V_I = 5.5 V or GND	0 V to 5.5 V			±0.1		±1*		±1	μA
I_{CC}	V_I = V_{CC} or GND, I_O = 0	5.5 V			2		20		20	μA
C_i	V_I = V_{CC} or GND	5 V		2.5	10				10	pF

* On products compliant to MIL-PRF-38535, this parameter is not production tested at V_{CC} = 0 V.

switching characteristics over recommended operating free-air temperature range, V_{CC} = 3.3 V ± 0.3 V (unless otherwise noted) (see Figure 1)

PARAMETER	FROM (INPUT)	TO (OUTPUT)	LOAD CAPACITANCE	T_A = 25°C			SN54AHC05		SN74AHC05		UNIT
				MIN	TYP	MAX	MIN	MAX	MIN	MAX	
t_{PLZ}	A	Y	C_L = 15 pF		2.9**	7.1**	1**	8.5**	1	8.5	ns
t_{PZL}					4**	7.1**	1**	8.5**	1	8.5	
t_{PLZ}	A	Y	C_L = 50 pF		4.7	10.6	1	12	1	12	ns
t_{PZL}					5.8	10.6	1	12	1	12	

** On products compliant to MIL-PRF-38535, this parameter is not production tested.

PRODUCT PREVIEW

PRODUCT PREVIEW information concerns products in the formative or design phase of development. Characteristic data and other specifications are design goals. Texas Instruments reserves the right to change or discontinue these products without notice.

switching characteristics over recommended operating free-air temperature range, V_{CC} = 5 V ± 0.5 V (unless otherwise noted) (see Figure 1)

PARAMETER	FROM (INPUT)	TO (OUTPUT)	LOAD CAPACITANCE	T_A = 25°C			SN54AHC05		SN74AHC05		UNIT
				MIN	TYP	MAX	MIN	MAX	MIN	MAX	
t_{PLZ}	A	Y	C_L = 15 pF		2.2*	5.5*	1*	6.5*	1	6.5	ns
t_{PZL}					2.9*	5.5*	1*	6.5*	1	6.5	
t_{PLZ}	A	Y	C_L = 50 pF		3.4	7.5	1	8.5	1	8.5	ns
t_{PZL}					4.2	7.5	1	8.5	1	8.5	

* On products compliant to MIL-PRF-38535, this parameter is not production tested.

PRODUCT PREVIEW

operating characteristics, V_{CC} = 5 V, T_A = 25°C

PARAMETER		TEST CONDITIONS		TYP	UNIT
C_{pd}	Power dissipation capacitance	No load,	f = 1 MHz	3	pF

PRODUCT PREVIEW information concerns products in the formative or design phase of development. Characteristic data and other specifications are design goals. Texas Instruments reserves the right to change or discontinue these products without notice.

PARAMETER MEASUREMENT INFORMATION

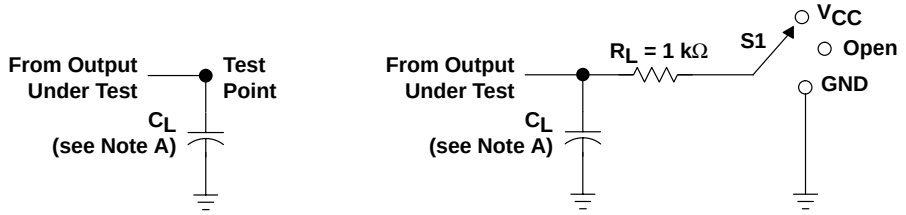

TEST	S1
t_{PLH}/t_{PHL}	Open
t_{PLZ}/t_{PZL}	V_{CC}
t_{PHZ}/t_{PZH}	GND
Open Drain	V_{CC}

LOAD CIRCUIT FOR
TOTEM-POLE OUTPUTS

LOAD CIRCUIT FOR
3-STATE AND OPEN-DRAIN OUTPUTS

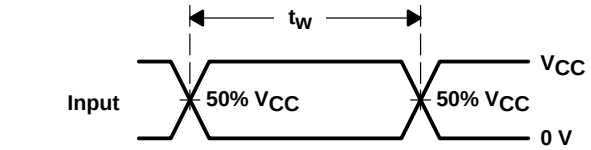

VOLTAGE WAVEFORMS
PULSE DURATION

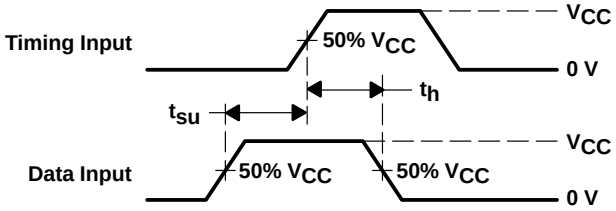

VOLTAGE WAVEFORMS
SETUP AND HOLD TIMES

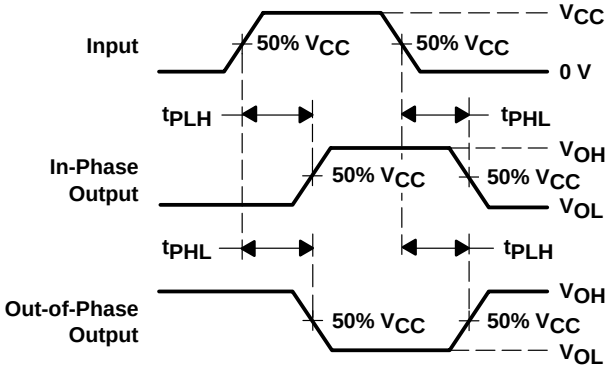

VOLTAGE WAVEFORMS
PROPAGATION DELAY TIMES
INVERTING AND NONINVERTING OUTPUTS

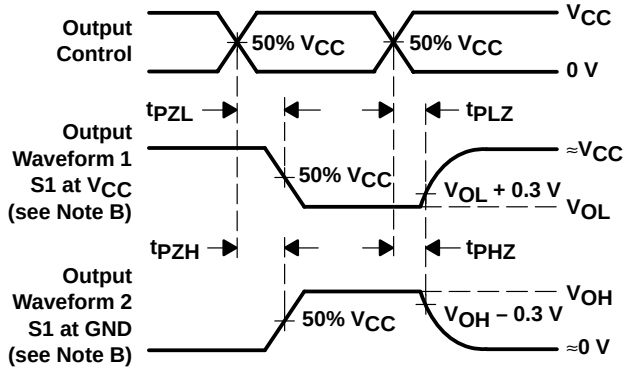

VOLTAGE WAVEFORMS
ENABLE AND DISABLE TIMES
LOW- AND HIGH-LEVEL ENABLING

NOTES: A. C_L includes probe and jig capacitance.
B. Waveform 1 is for an output with internal conditions such that the output is low except when disabled by the output control. Waveform 2 is for an output with internal conditions such that the output is high except when disabled by the output control.
C. All input pulses are supplied by generators having the following characteristics: PRR ≤ 1 MHz, Z_O = 50 Ω, t_r ≤ 3 ns, t_f ≤ 3 ns.
D. The outputs are measured one at a time with one input transition per measurement.
E. All parameters and waveforms are not applicable to all devices.

Figure 1. Load Circuit and Voltage Waveforms

PACKAGING INFORMATION

Orderable part number	Status (1)	Material type (2)	Package | Pins	Package qty | Carrier	RoHS (3)	Lead finish/ Ball material (4)	MSL rating/ Peak reflow (5)	Op temp (°C)	Part marking (6)
SN74AHC05D	Obsolete	Production	SOIC (D) | 14	-	-	Call TI	Call TI	-40 to 85	AHC05
SN74AHC05DBR	Active	Production	SSOP (DB) | 14	2000 | LARGE T&R	Yes	NIPDAU	Level-1-260C-UNLIM	-40 to 85	HA05
SN74AHC05DBR.A	Active	Production	SSOP (DB) | 14	2000 | LARGE T&R	Yes	NIPDAU	Level-1-260C-UNLIM	-40 to 85	HA05
SN74AHC05DR	Active	Production	SOIC (D) | 14	2500 | LARGE T&R	Yes	NIPDAU	Level-1-260C-UNLIM	-40 to 85	AHC05
SN74AHC05DR.A	Active	Production	SOIC (D) | 14	2500 | LARGE T&R	Yes	NIPDAU	Level-1-260C-UNLIM	-40 to 85	AHC05
SN74AHC05N	Active	Production	PDIP (N) | 14	25 | TUBE	Yes	NIPDAU	N/A for Pkg Type	-40 to 85	SN74AHC05N
SN74AHC05N.A	Active	Production	PDIP (N) | 14	25 | TUBE	Yes	NIPDAU	N/A for Pkg Type	-40 to 85	SN74AHC05N
SN74AHC05PW	Obsolete	Production	TSSOP (PW) | 14	-	-	Call TI	Call TI	-40 to 85	HA05
SN74AHC05PWR	Active	Production	TSSOP (PW) | 14	2000 | LARGE T&R	Yes	NIPDAU	Level-1-260C-UNLIM	-40 to 85	HA05
SN74AHC05PWR.A	Active	Production	TSSOP (PW) | 14	2000 | LARGE T&R	Yes	NIPDAU	Level-1-260C-UNLIM	-40 to 85	HA05

(1) **Status:** For more details on status, see our product life cycle.

(2) **Material type:** When designated, preproduction parts are prototypes/experimental devices, and are not yet approved or released for full production. Testing and final process, including without limitation quality assurance, reliability performance testing, and/or process qualification, may not yet be complete, and this item is subject to further changes or possible discontinuation. If available for ordering, purchases will be subject to an additional waiver at checkout, and are intended for early internal evaluation purposes only. These items are sold without warranties of any kind.

(3) **RoHS values:** Yes, No, RoHS Exempt. See the TI RoHS Statement for additional information and value definition.

(4) **Lead finish/Ball material:** Parts may have multiple material finish options. Finish options are separated by a vertical ruled line. Lead finish/Ball material values may wrap to two lines if the finish value exceeds the maximum column width.

(5) **MSL rating/Peak reflow:** The moisture sensitivity level ratings and peak solder (reflow) temperatures. In the event that a part has multiple moisture sensitivity ratings, only the lowest level per JEDEC standards is shown. Refer to the shipping label for the actual reflow temperature that will be used to mount the part to the printed circuit board.

(6) **Part marking:** There may be an additional marking, which relates to the logo, the lot trace code information, or the environmental category of the part.

Multiple part markings will be inside parentheses. Only one part marking contained in parentheses and separated by a "~" will appear on a part. If a line is indented then it is a continuation of the previous line and the two combined represent the entire part marking for that device.

Important Information and Disclaimer: The information provided on this page represents TI's knowledge and belief as of the date that it is provided. TI bases its knowledge and belief on information provided by third parties, and makes no representation or warranty as to the accuracy of such information. Efforts are underway to better integrate information from third parties. TI has taken and continues to take reasonable steps to provide representative

and accurate information but may not have conducted destructive testing or chemical analysis on incoming materials and chemicals. TI and TI suppliers consider certain information to be proprietary, and thus CAS numbers and other limited information may not be available for release.

In no event shall TI's liability arising out of such information exceed the total purchase price of the TI part(s) at issue in this document sold by TI to Customer on an annual basis.

TAPE AND REEL INFORMATION

REEL DIMENSIONS

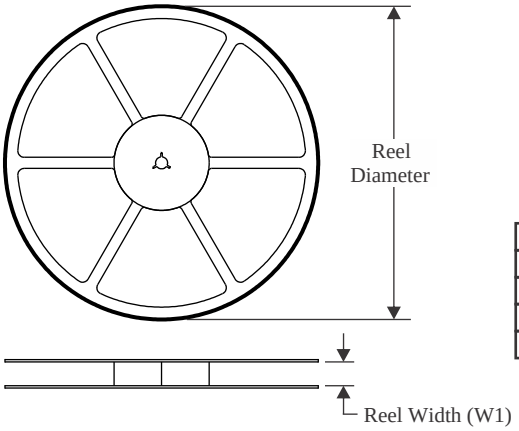

TAPE DIMENSIONS

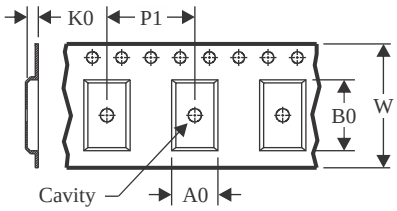

A0	Dimension designed to accommodate the component width
B0	Dimension designed to accommodate the component length
K0	Dimension designed to accommodate the component thickness
W	Overall width of the carrier tape
P1	Pitch between successive cavity centers

QUADRANT ASSIGNMENTS FOR PIN 1 ORIENTATION IN TAPE

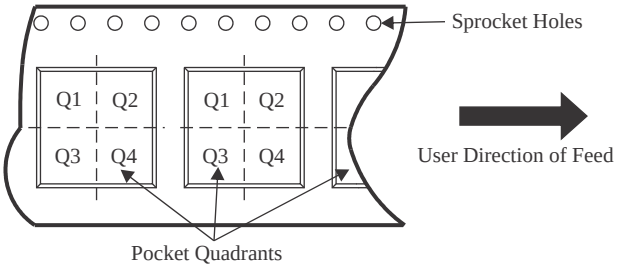

*All dimensions are nominal

Device	Package Type	Package Drawing	Pins	SPQ	Reel Diameter (mm)	Reel Width W1 (mm)	A0 (mm)	B0 (mm)	K0 (mm)	P1 (mm)	W (mm)	Pin1 Quadrant
SN74AHC05DBR	SSOP	DB	14	2000	330.0	16.4	8.35	6.6	2.4	12.0	16.0	Q1
SN74AHC05DR	SOIC	D	14	2500	330.0	16.4	6.5	9.0	2.1	8.0	16.0	Q1
SN74AHC05PWR	TSSOP	PW	14	2000	330.0	12.4	6.9	5.6	1.6	8.0	12.0	Q1

TAPE AND REEL BOX DIMENSIONS

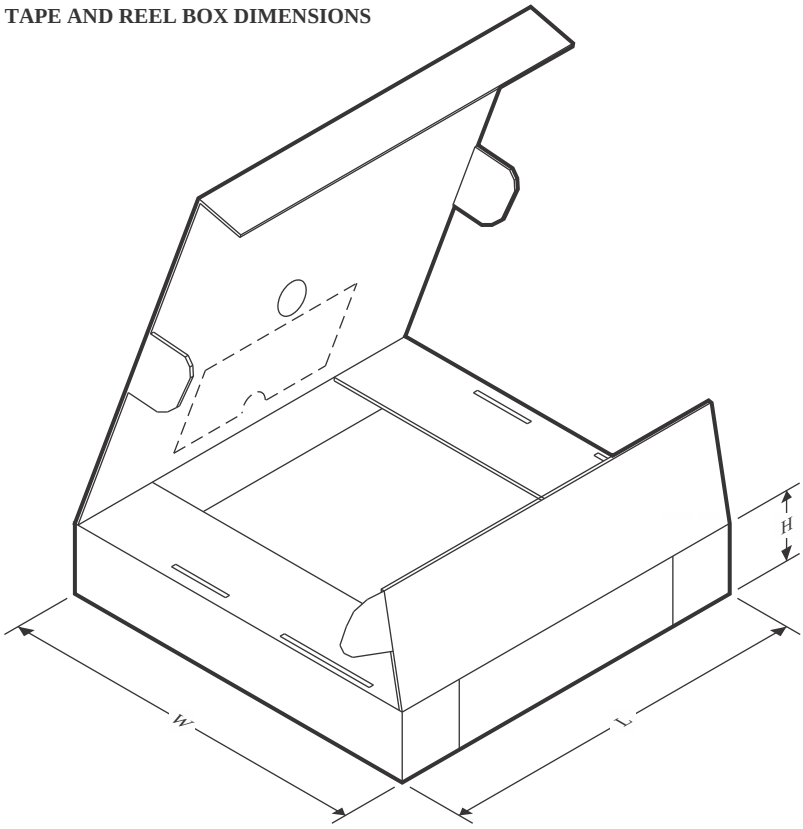

*All dimensions are nominal

Device	Package Type	Package Drawing	Pins	SPQ	Length (mm)	Width (mm)	Height (mm)
SN74AHC05DBR	SSOP	DB	14	2000	356.0	356.0	35.0
SN74AHC05DR	SOIC	D	14	2500	356.0	356.0	35.0
SN74AHC05PWR	TSSOP	PW	14	2000	356.0	356.0	35.0

TUBE

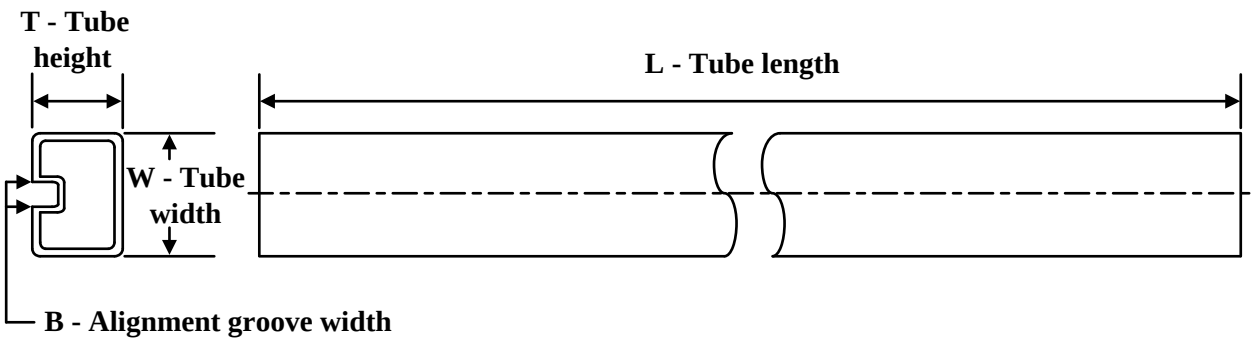

*All dimensions are nominal

Device	Package Name	Package Type	Pins	SPQ	L (mm)	W (mm)	T (µm)	B (mm)
SN74AHC05N	N	PDIP	14	25	506	13.97	11230	4.32
SN74AHC05N.A	N	PDIP	14	25	506	13.97	11230	4.32

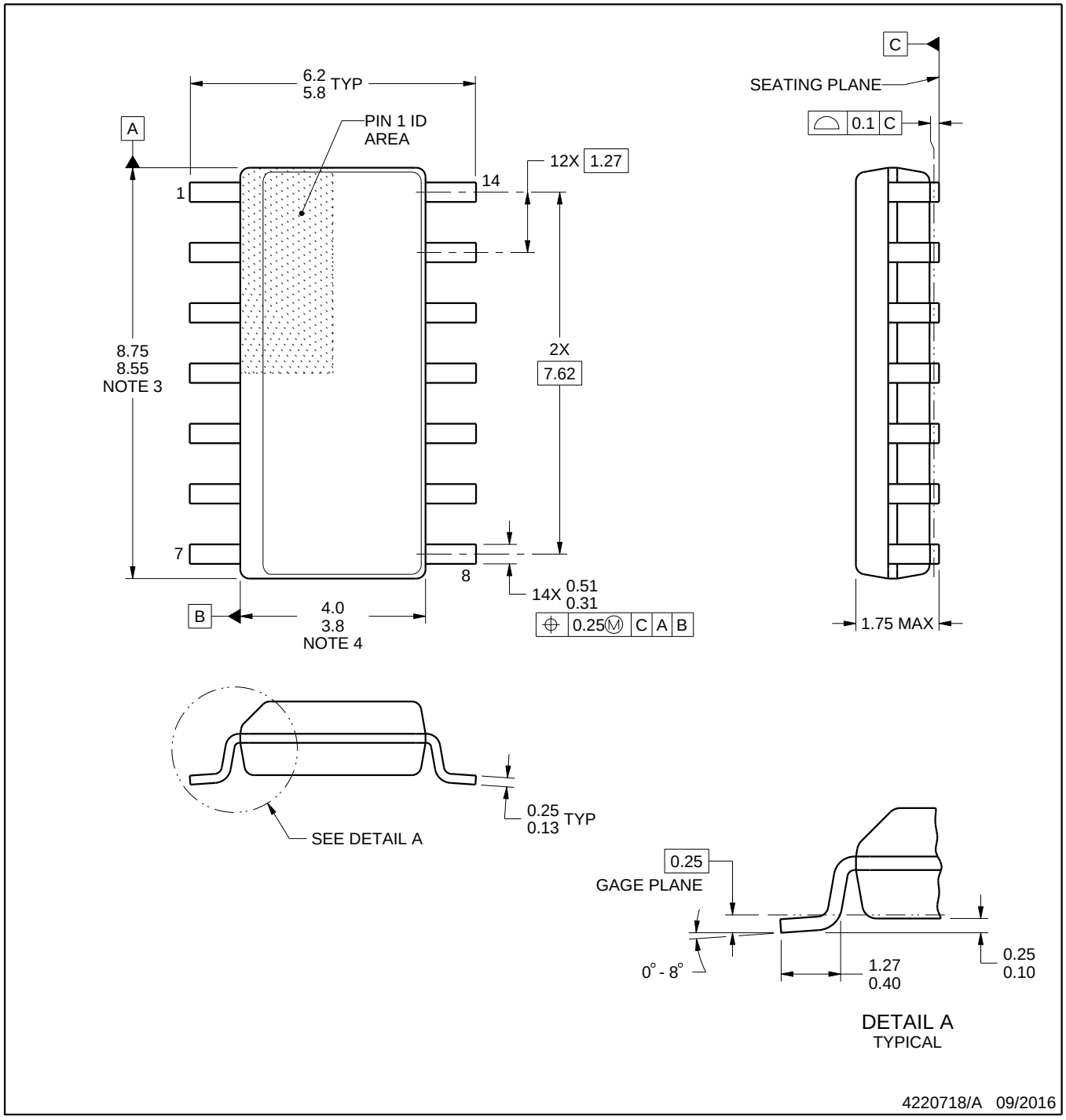

NOTES:

1. All linear dimensions are in millimeters. Dimensions in parenthesis are for reference only. Dimensioning and tolerancing per ASME Y14.5M.
2. This drawing is subject to change without notice.
3. This dimension does not include mold flash, protrusions, or gate burrs. Mold flash, protrusions, or gate burrs shall not exceed 0.15 mm, per side.
4. This dimension does not include interlead flash. Interlead flash shall not exceed 0.43 mm, per side.
5. Reference JEDEC registration MS-012, variation AB.

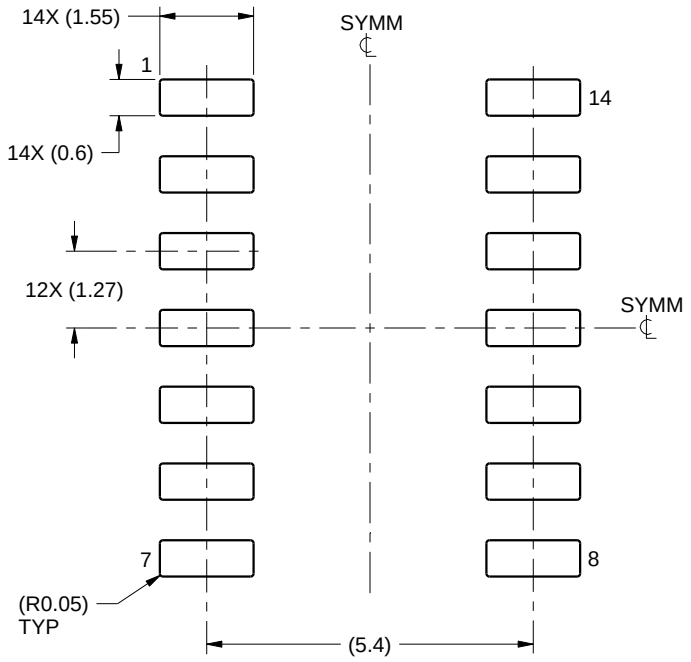

LAND PATTERN EXAMPLE
SCALE:8X

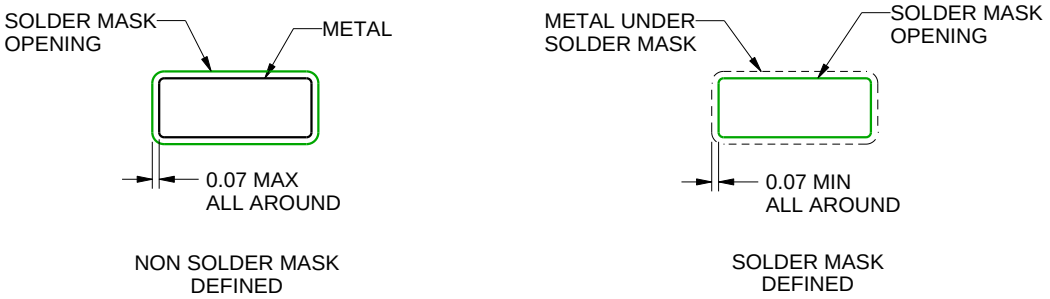

SOLDER MASK DETAILS

4220718/A 09/2016

NOTES: (continued)

6. Publication IPC-7351 may have alternate designs.
7. Solder mask tolerances between and around signal pads can vary based on board fabrication site.

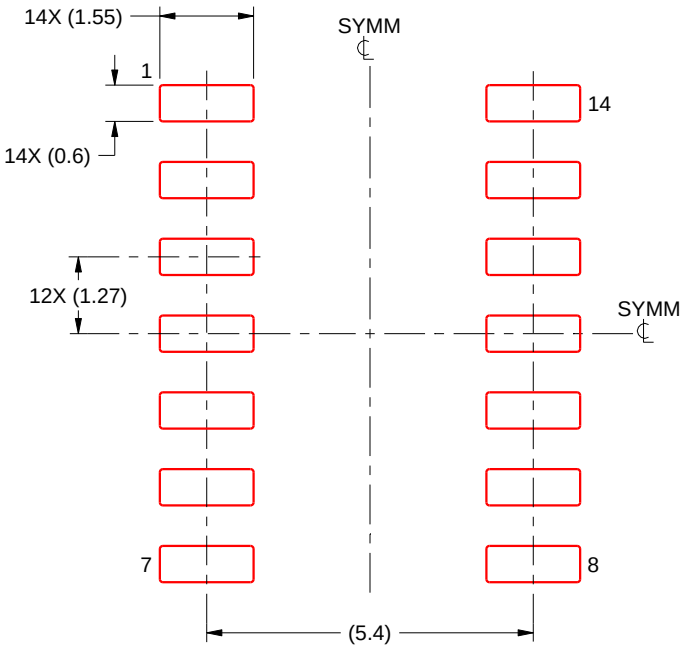

SOLDER PASTE EXAMPLE
BASED ON 0.125 mm THICK STENCIL
SCALE:8X

4220718/A 09/2016

NOTES: (continued)

8. Laser cutting apertures with trapezoidal walls and rounded corners may offer better paste release. IPC-7525 may have alternate design recommendations.
9. Board assembly site may have different recommendations for stencil design.

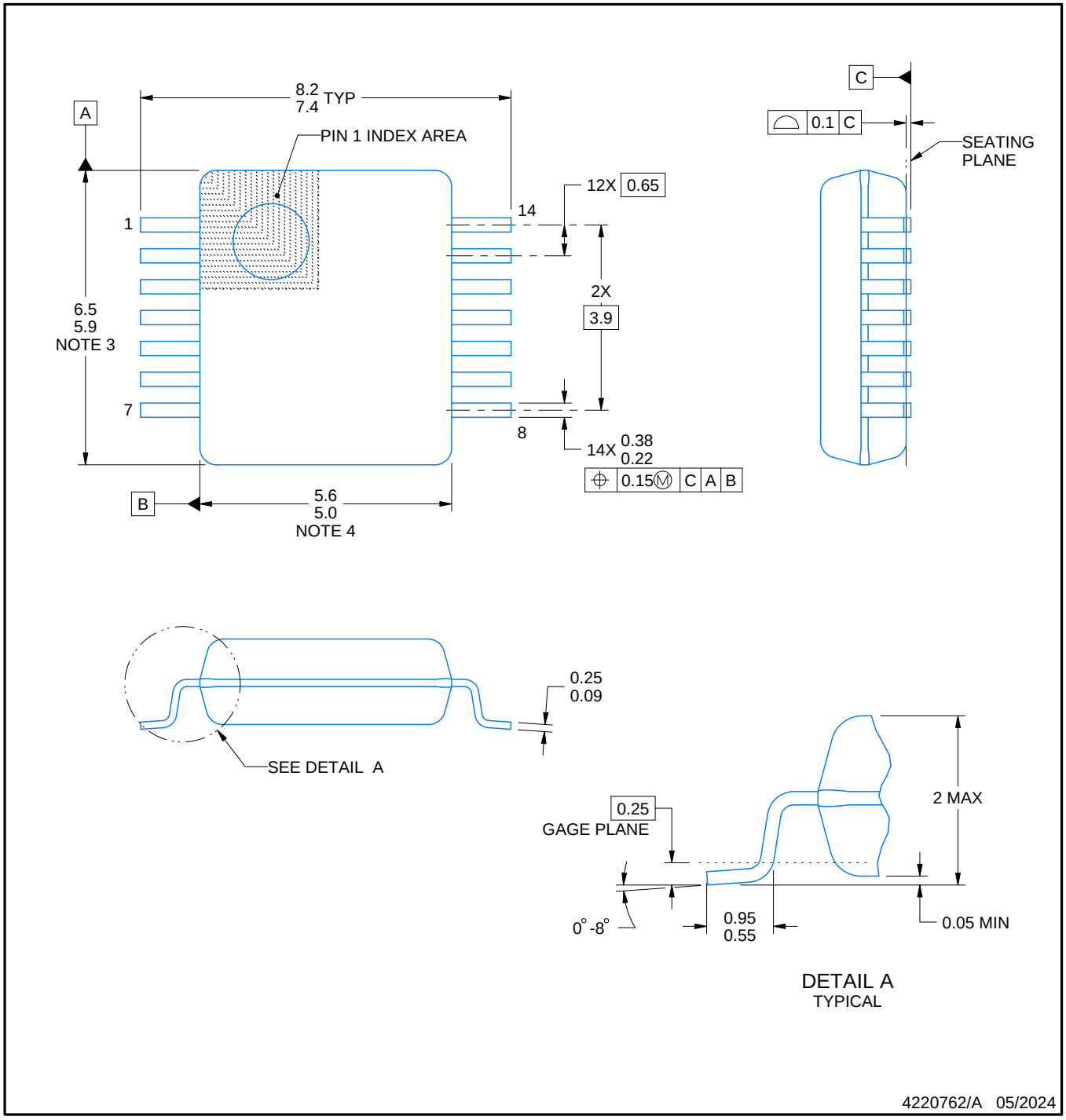

NOTES:

1. All linear dimensions are in millimeters. Any dimensions in parenthesis are for reference only. Dimensioning and tolerancing per ASME Y14.5M.
2. This drawing is subject to change without notice.
3. This dimension does not include mold flash, protrusions, or gate burrs. Mold flash, protrusions, or gate burrs shall not exceed 0.15 mm per side.
4. Reference JEDEC registration MO-150.

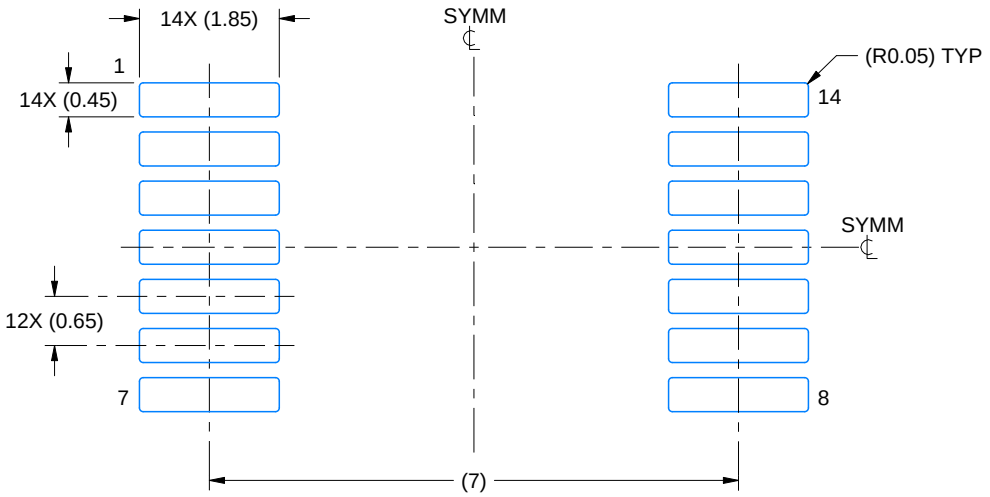

LAND PATTERN EXAMPLE
EXPOSED METAL SHOWN
SCALE: 10X

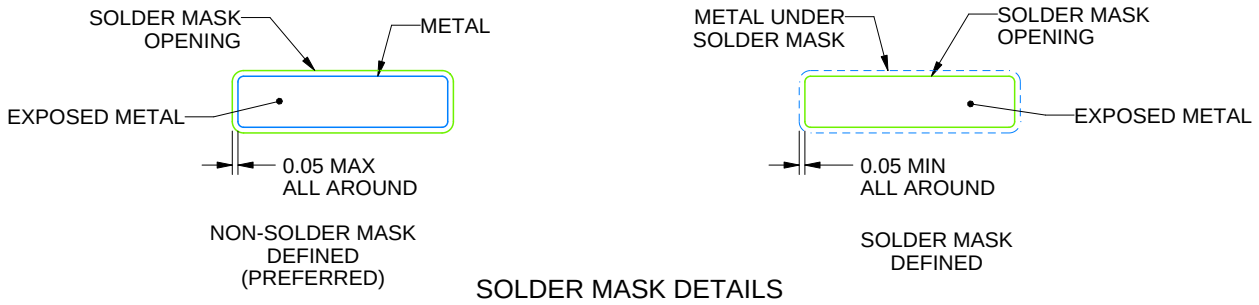

SOLDER MASK DETAILS

4220762/A 05/2024

NOTES: (continued)

5. Publication IPC-7351 may have alternate designs.
6. Solder mask tolerances between and around signal pads can vary based on board fabrication site.

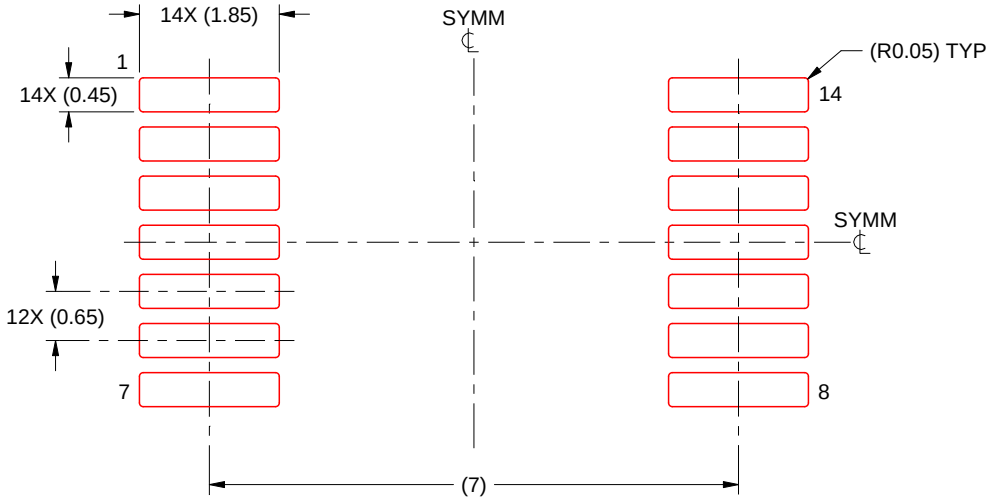

SOLDER PASTE EXAMPLE
BASED ON 0.125 mm THICK STENCIL
SCALE: 10X

4220762/A 05/2024

NOTES: (continued)

7. Laser cutting apertures with trapezoidal walls and rounded corners may offer better paste release. IPC-7525 may have alternate design recommendations.
8. Board assembly site may have different recommendations for stencil design.

N (R–PDIP–T**) PLASTIC DUAL–IN–LINE PACKAGE

16 PINS SHOWN

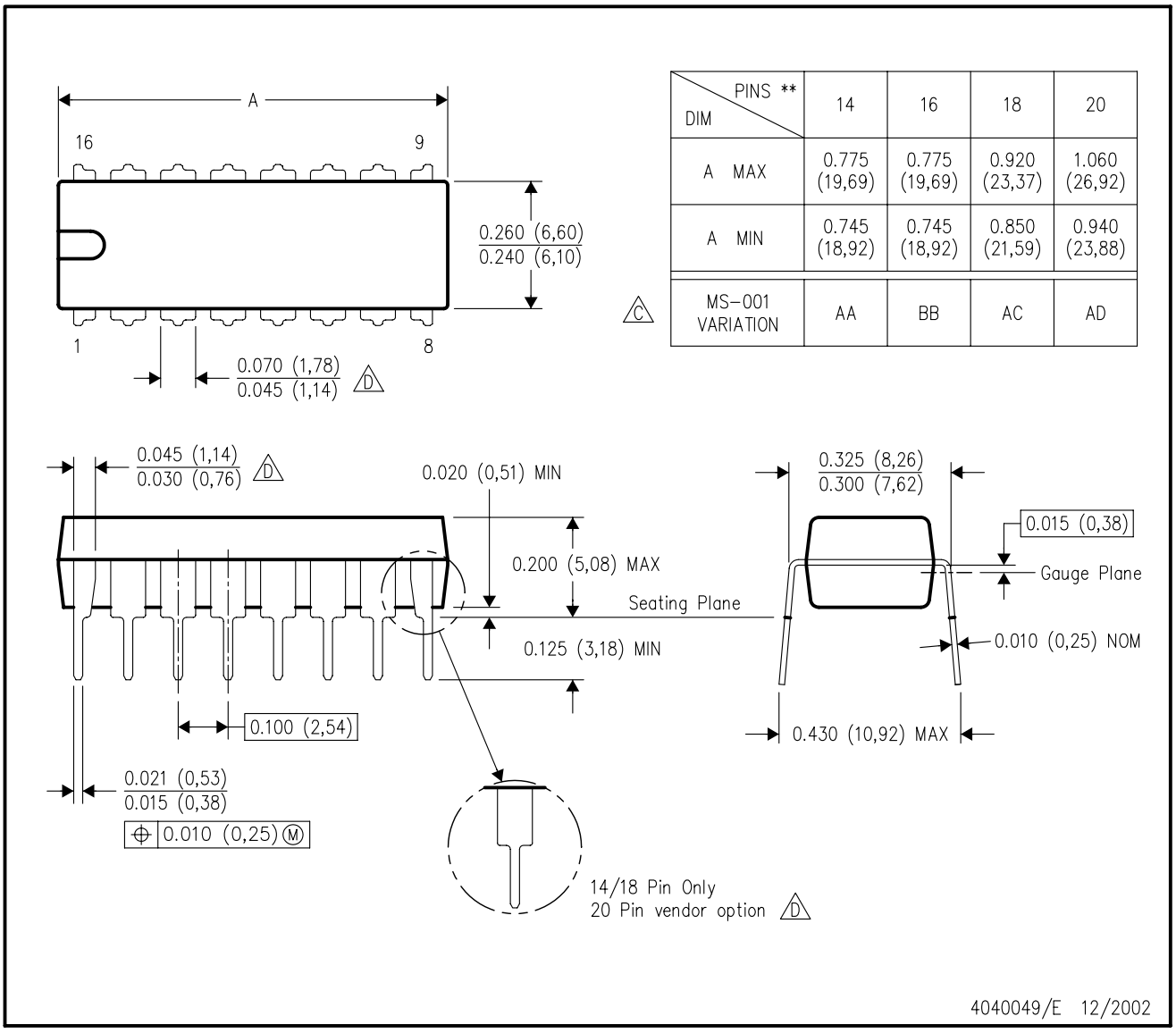

DIM \ PINS **	14	16	18	20
A MAX	0.775 (19,69)	0.775 (19,69)	0.920 (23,37)	1.060 (26,92)
A MIN	0.745 (18,92)	0.745 (18,92)	0.850 (21,59)	0.940 (23,88)
MS–001 VARIATION (C)	AA	BB	AC	AD

NOTES:
A. All linear dimensions are in inches (millimeters).
B. This drawing is subject to change without notice.
C. Falls within JEDEC MS–001, except 18 and 20 pin minimum body length (Dim A).
D. The 20 pin end lead shoulder width is a vendor option, either half or full width.

PW0014A

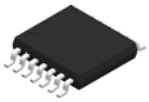

PACKAGE OUTLINE

TSSOP - 1.2 mm max height

SMALL OUTLINE PACKAGE

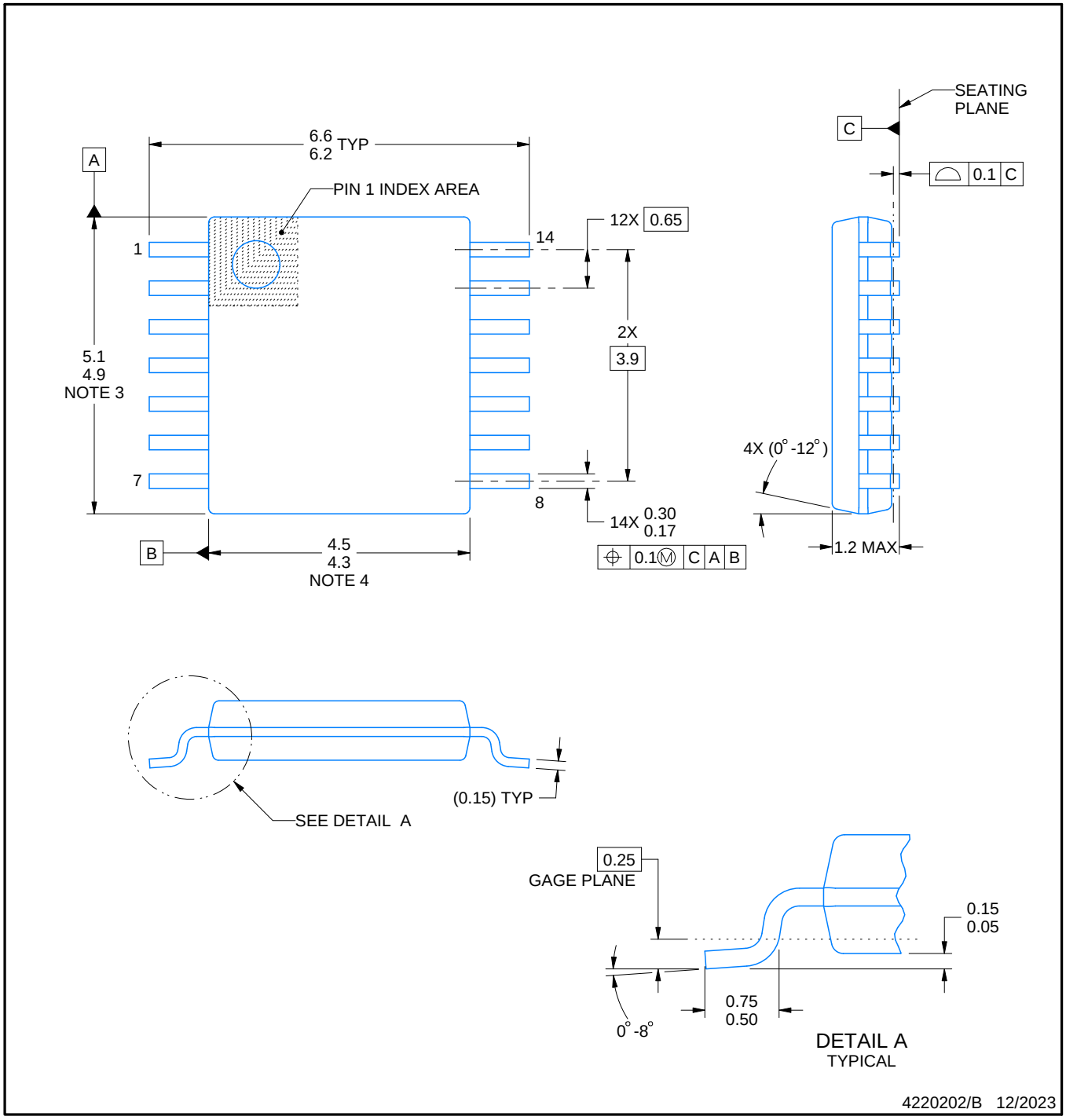

NOTES:

1. All linear dimensions are in millimeters. Any dimensions in parenthesis are for reference only. Dimensioning and tolerancing per ASME Y14.5M.
2. This drawing is subject to change without notice.
3. This dimension does not include mold flash, protrusions, or gate burrs. Mold flash, protrusions, or gate burrs shall not exceed 0.15 mm per side.
4. This dimension does not include interlead flash. Interlead flash shall not exceed 0.25 mm per side.
5. Reference JEDEC registration MO-153.

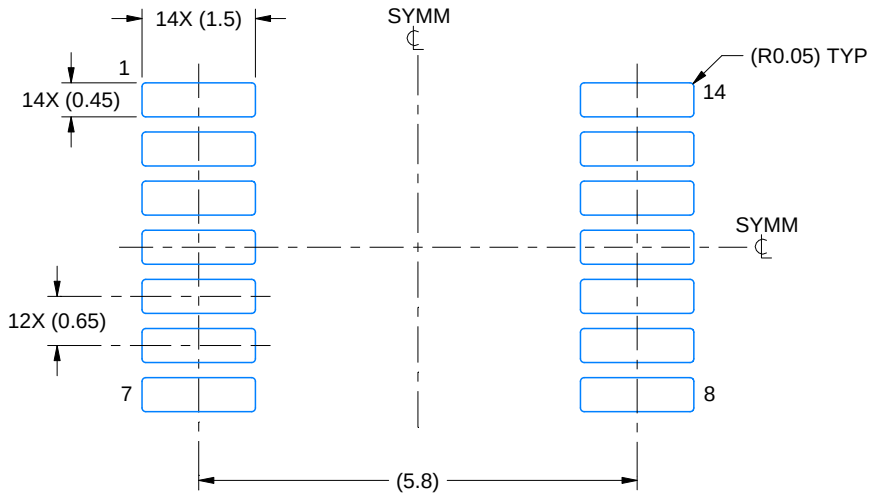

LAND PATTERN EXAMPLE
EXPOSED METAL SHOWN
SCALE: 10X

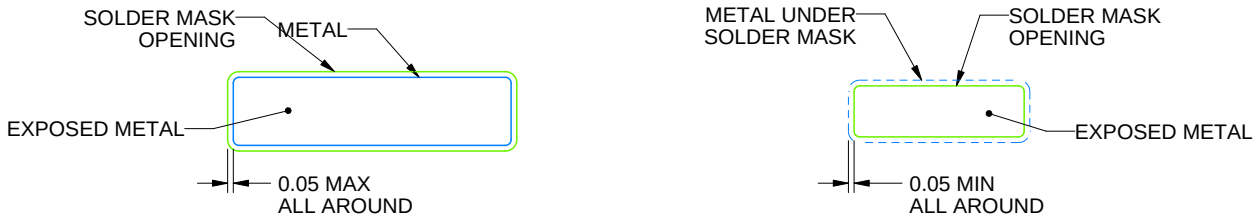

NON-SOLDER MASK DEFINED (PREFERRED)

SOLDER MASK DEFINED

SOLDER MASK DETAILS

4220202/B 12/2023

NOTES: (continued)

6. Publication IPC-7351 may have alternate designs.
7. Solder mask tolerances between and around signal pads can vary based on board fabrication site.

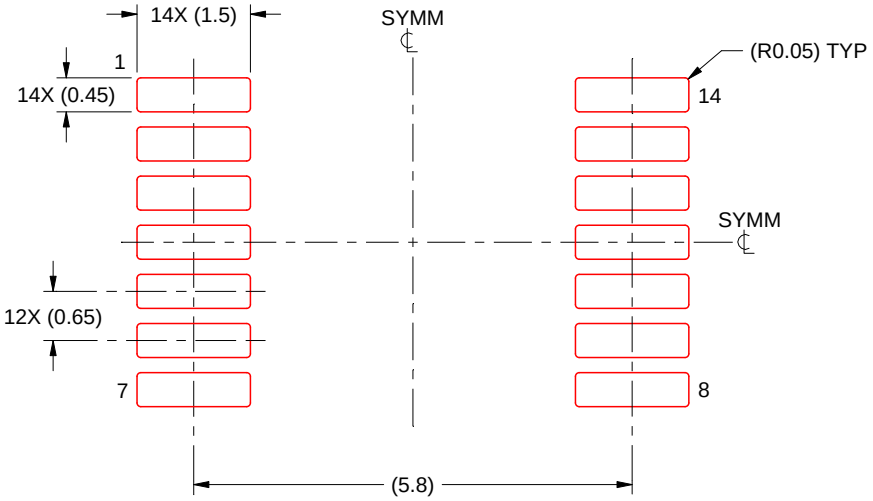

SOLDER PASTE EXAMPLE
BASED ON 0.125 mm THICK STENCIL
SCALE: 10X

4220202/B 12/2023

NOTES: (continued)

8. Laser cutting apertures with trapezoidal walls and rounded corners may offer better paste release. IPC-7525 may have alternate design recommendations.
9. Board assembly site may have different recommendations for stencil design.

IMPORTANT NOTICE AND DISCLAIMER

TI PROVIDES TECHNICAL AND RELIABILITY DATA (INCLUDING DATA SHEETS), DESIGN RESOURCES (INCLUDING REFERENCE DESIGNS), APPLICATION OR OTHER DESIGN ADVICE, WEB TOOLS, SAFETY INFORMATION, AND OTHER RESOURCES “AS IS” AND WITH ALL FAULTS, AND DISCLAIMS ALL WARRANTIES, EXPRESS AND IMPLIED, INCLUDING WITHOUT LIMITATION ANY IMPLIED WARRANTIES OF MERCHANTABILITY, FITNESS FOR A PARTICULAR PURPOSE OR NON-INFRINGEMENT OF THIRD PARTY INTELLECTUAL PROPERTY RIGHTS.

These resources are intended for skilled developers designing with TI products. You are solely responsible for (1) selecting the appropriate TI products for your application, (2) designing, validating and testing your application, and (3) ensuring your application meets applicable standards, and any other safety, security, regulatory or other requirements.

These resources are subject to change without notice. TI grants you permission to use these resources only for development of an application that uses the TI products described in the resource. Other reproduction and display of these resources is prohibited. No license is granted to any other TI intellectual property right or to any third party intellectual property right. TI disclaims responsibility for, and you will fully indemnify TI and its representatives against, any claims, damages, costs, losses, and liabilities arising out of your use of these resources.

TI’s products are provided subject to TI’s Terms of Sale or other applicable terms available either on ti.com or provided in conjunction with such TI products. TI’s provision of these resources does not expand or otherwise alter TI’s applicable warranties or warranty disclaimers for TI products.

TI objects to and rejects any additional or different terms you may have proposed.

Mailing Address: Texas Instruments, Post Office Box 655303, Dallas, Texas 75265
Copyright © 2025, Texas Instruments Incorporated