TLIN2022-Q1 Automotive Fault Protected Dual Local Interconnect Network (LIN) Transceiver with Dominant State Timeout

1 Features

- AEC-Q100 Qualified for automotive applications
  - Temperature: –40°C to 125°C ambient
  - HBM certification level: ±8 kV
  - CDM certification level: ±1.5 kV
- Compliant to LIN 2.0, LIN 2.1, LIN 2.2, LIN 2.2 A and ISO/DIS 17987–4.2 (See SLLA491)
- Conforms to SAEJ2602 recommended practice for LIN (See SLLA491)
- Supports 24 V battery applications
- LIN transmit data rate up to 20 kbps.
- Wide operating ranges
  - 4 V to 45 V supply voltage
  - ±60 V LIN bus fault protection
- Sleep mode: ultra-low current consumption allows wake-up event from:
  - LIN bus
  - Local wake up through EN
- Power up and down glitch free operation
- Protection features:
  - Under voltage protection on V_{SUP}
  - TXD Dominant time out protection (DTO)
  - Thermal shutdown protection
  - Unpowered node or ground disconnection failsafe at system level.
- Available in SOIC (14) package and leadless VSON (14) Package with improved automated optical inspection (AOI) capability

2 Applications

- Body electronics and Lighting
- Hybrid electric vehicles and power train systems
- Infotainment and cluster
- Appliances

3 Description

The TLIN2022-Q1 is a Dual Local Interconnect Network (LIN) physical layer transceiver with integrated wake-up and protection features, complaint to LIN 2.0, LIN 2.1, LIN 2.2, LIN 2.2A and ISO/DIS 17987–4.2 standards. LIN is a single wire bidirectional bus typically used for low speed in-vehicle networks using data rates up to 20 kbps. The TLIN2022-Q1 is designed to support 24 V applications with wider operating voltage and additional bus-fault protection. The LIN receiver supports data rates up to 100 kbps for in-line programming. The TLIN2022-Q1 converts the LIN protocol data stream on the TXD input into a LIN bus signal using a current-limited wave-shaping driver which reduces electromagnetic emissions (EME). The receiver converts the data stream to logic level signals that are sent to the microprocessor through the open-drain RXD pin. Ultra-low current consumption is possible using the sleep mode which allows wake-up via LIN bus or pin.

Package Information

PART NUMBER	PACKAGE(1)	BODY SIZE (NOM)
TLIN2022-Q1	SOIC (14) (D)	5.00 mm x 8.65 mm
	VSON (14) (DMT)	3.00 mm x 4.50 mm

(1) For all available packages, see the orderable addendum at the end of the data sheet.

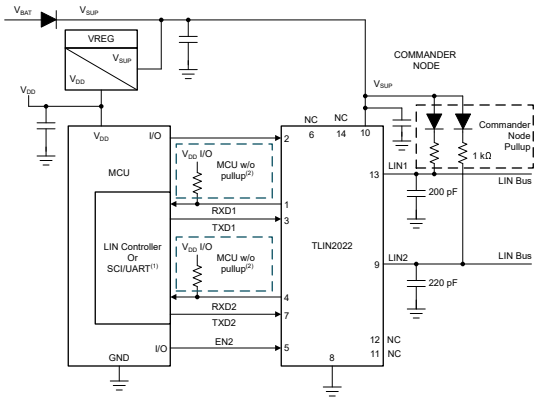

Simplified Schematics, Commander Mode

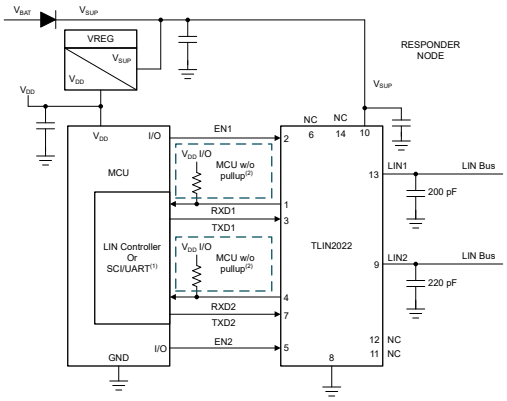

Simplified Schematics, Responder Mode

An IMPORTANT NOTICE at the end of this data sheet addresses availability, warranty, changes, use in safety-critical applications, intellectual property matters and other important disclaimers. PRODUCTION DATA.

Table of Contents

1 Features....1
2 Applications....1
3 Description....1
4 Revision History....2
5 Pin Configuration and Functions....3
6 Specifications....4
6.1 Absolute Maximum Ratings....4
6.2 ESD Ratings....4
6.3 ESD Ratings - IEC....4
6.4 Thermal Information....5
6.5 Recommended Operating Conditions....5
6.6 Electrical Characteristics....5
6.7 Switching Characteristics(2)....7
6.8 Timing Requirements....8
6.9 Typical Characteristics....9
7 Detailed Description....20
7.1 Overview....20
7.2 Functional Block Diagram....20
7.3 Feature Description....21
7.4 Device Functional Modes....23
8 Application and Implementation....26
8.1 Application Information....26
8.2 Typical Application....26
8.3 Power Supply Recommendations....27
8.4 Layout....28
9 Device and Documentation Support....30
9.1 Documentation Support....30
9.2 Receiving Notification of Documentation Updates....30
9.3 Support Resources....30
9.4 Trademarks....30
9.5 Electrostatic Discharge Caution....31
9.6 Glossary....31
10 Mechanical, Packaging, and Orderable Information....31

4 Revision History

NOTE: Page numbers for previous revisions may differ from page numbers in the current version.

Changes from Revision C (May 2020) to Revision D (June 2022)	Page
• Changed all instances of legacy terminology to commander and responder where mentioned	1

Changes from Revision B (April 2020) to Revision C (May 2020)	Page
• Added: (See SLLA491) to the *Features* list	1
• Added : See errata TLIN1022-Q1 and TLIN2022-Q1 Duty Cycle Over V_{SUP}	7

Changes from Revision A (January 2019) to Revision B (April 2020)	Page
• Changed Feature From: ±58 V LIN bus fault protection To: ±60 V LIN bus fault protection	1
• Deleted *Product Preview* from the VSON (14) (DMT) pachage	1
• Changed V_{SUP} from max = 58 V to max = 60 V in Absolute Maximum Ratings	4
• Changed V_{LIN} from min = –58 V, max = 58 V to min = –60 V, max = 60 V in Absolute Maximum Ratings	4
• Changed V_{LOGIC} from max = 5.5 V to: 6 V in Absolute Maximum Ratings	4
• Changed C_{LINPIN} from max = 45 pF to max = 25 pF and added V_{SUP} = 14 V for test condition in electrical characteristics	5

Changes from Revision * (December 2017) to Revision A (January 2019)	Page
• Changed the VSON Body Size From: 3.00 mm x 3.00 mm To: 3.00 mm x 4.50 mm	1

Copyright © 2022 Texas Instruments Incorporated

5 Pin Configuration and Functions

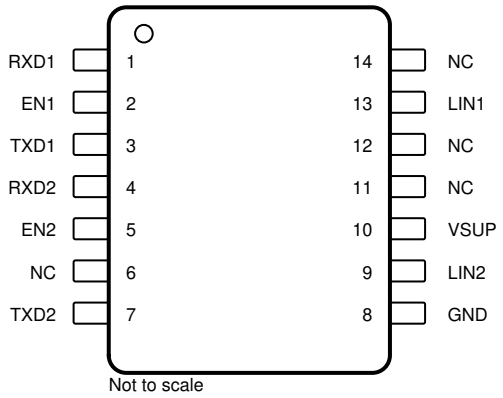

Figure 5-1. D Package, 14-Pin (SOIC) (Top View)

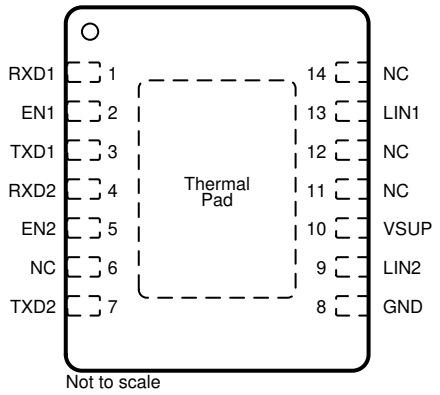

Figure 5-2. DMT Package, 14-Pin (VSON) (Top View)

Table 5-1. Pin Functions

PIN		TYPE[(1)]	DESCRIPTION
NO.	NAME		
1	RXD1	O	Channel 1 RXD Output (open-drain) interface reporting state of LIN bus voltage
2	EN1	I	Channel 1 Enable Input
3	TXD1	I	Channel 1 TXD input interface to control state of LIN output
4	RXD2	O	Channel 2 RXD Output (open-drain) interface reporting state of LIN bus voltage
5	EN2	I	Channel 2 Enable Input
7	TXD2	I	Channel 2 TXD input interface to control state of LIN output
8	GND	G	Ground
9	LIN2	HV I/O	Channel 2 High voltage LIN bus single-wire transmitter and receiver
10	VSUP	Supply	Device Supply Voltage (connected to battery in series with external reverse blocking diode)
13	LIN1	HV I/O	Channel 1 High voltage LIN bus single-wire transmitter and receiver
6, 11, 12, 14	NC	–	Not Connected

(1) I = Input, O = Output, I/O = Input or Output, G = Ground.

6 Specifications

6.1 Absolute Maximum Ratings

over operating free-air temperature range (unless otherwise noted)[1]

Symbol	Parameter	MIN	MAX	UNIT
V_{SUP}	Supply voltage range (ISO/DIS 17987 Param 10)	–0.3	60	V
V_{LIN}	LIN Bus input voltage (ISO/DIS 17987 Param 82)	–60	60	V
V_{LOGIC}	Logic pin voltage (RXD, TXD, EN)	–0.3	6	V
T_A	Ambient temperature range	–40	125	°C
T_J	Junction temperature	–55	150	°C

(1) Operation outside the *Absolute Maximum Ratings* may cause permanent device damage. *Absolute Maximum Ratings* do not imply functional operation of the device at these or any other conditions beyond those listed under *Recommended Operating Conditions*. If used outside the *Recommended Operating Conditions* but within the *Absolute Maximum Ratings*, the device may not be fully functional, and this may affect device reliability, functionality, performance, and shorten the device lifetime

6.2 ESD Ratings

ESD Ratings				VALUE	UNIT
$V_{(ESD)}$	Electrostatic discharge	Human body model (HBM) per AEC Q100-002[1]	Pins RXD, RXD, EN [1]	±4000	V
			Pins LIN Bus [2] and V_{SUP}	±8000	
		Charged device model (CDM), per AEC Q100-011	All pins	±1500	

(1) JEDEC document JEP155 states that 500-V HBM allows safe manufacturing with a standard ESD control process.
(2) LIN bus a stressed with respect to GND.

6.3 ESD Ratings - IEC

ESD and Surge Protection Ratings			VALUE	UNIT
$V_{(ESD)}$	IEC 61000-4-2 contact discharge electrostatic discharge[1]	LIN bus and V_{SUP} pin to GND[3]	±6000	V
$V_{(ESD)}$	IEC 61000-4-2 air-gap discharge electrostatic discharge[1]	LIN bus and V_{SUP} pin to GND[3]	±15000	
$V_{(ESD)}$	Powered ESD Performance, per SAEJ2962-1[2]	contact discharge	±8000	V
$V_{(ESD)}$	Powered ESD Performance, per SAEJ2962-1[2]	air-gap discharge	±15000	
ISO7637-2[4] & IEC 62215-3 Transients according to IBEE LIN EMC test spec LIN bus pin and V_{SUP}		Pulse 1	–100	V
		Pulse 2	75	V
ISO7637-2[4] & IEC 62215-3 Transients according to IBEE LIN EMC test spec LIN bus pin and V_{SUP}		Pulse 3a	–150	V
		Pulse 3b	100	V

(1) IEC 61000-4-2 is a system level ESD test. Results given here are specific to the IBEE LIN EMC Test specification conditions. Different system level configurations may lead to different results
(2) SAEJ2962-1 Testing performed at 3rd party US3 approved EMC test facility, test report available upon request
(3) Testing performed at 3rd party IBEE Zwickau test house, test report available upon request
(4) ISO7637 is a system level transient test. Results given here are specific to the IBEE LIN EMC Test specification conditions. Different system level configurations may lead to different results.

Copyright © 2022 Texas Instruments Incorporated

6.4 Thermal Information

THERMAL METRIC[1]		D (SOIC) 14-PINS	DMT (VSON) 14-PINS	UNIT
$R_{\Theta JA}$	Junction-to-ambient thermal resistance	82.3	35.5	°C/W
$R_{\Theta JC(top)}$	Junction-to-case (top) thermal resistance	41.5	18.1	°C/W
$R_{\Theta JB}$	Junction-to-board thermal resistance	38.4	13.1	°C/W
Ψ_{JT}	Junction-to-top characterization parameter	8.9	0.6	°C/W
Ψ_{JB}	Junction-to-board characterization parameter	38.1	13.1	°C/W
$R_{\Theta JC(bot)}$	Junction-to-case (bottom) thermal resistance	n/a	2.5	°C/W

(1) For more information about traditional and new thermal metrics, see the *Semiconductor and IC package thermal metrics* application report.

6.5 Recommended Operating Conditions

over operating free-air temperature range (unless otherwise noted)

PARAMETER - DEFINITION		MIN	NOM	MAX	UNIT
V_{SUP}	Supply voltage	4		48	V
V_{LIN}	LIN Bus input voltage	0		48	V
V_{LOGIC}	Logic Pin Voltage (RXD, TXD, EN)	0		5.25	V
TSD	Thermal shutdown edge	165			°C
$TSD_{(HYS)}$	Thermal shutdown hysteresis		15		°C

6.6 Electrical Characteristics

over operating free-air temperature range (unless otherwise noted)

PARAMETER		TEST CONDITIONS	MIN	TYP	MAX	UNIT
Power Supply						
V_{SUP}	Operational supply voltage (ISO/DIS 17987 Param 10, 53)	Device is operational beyond the LIN defined nominal supply voltage range See Figure 7-1 and Figure 7-2	4		48	V
V_{SUP}	Nominal supply voltage (ISO/DIS 17987 Param 10, 53): Normal Mode: Ramp VSUP while LIN signal is a 10 kHZ Square Wave with 50 % duty cycle and 18V swing.	Normal and Standby Modes: Ramp V_{SUP} while LIN signal is a 10 kHZ Square Wave with 50 % duty cycle and 36V swing. See Figure 7-1 and Figure 7-2	4		48	V
		Sleep Mode	4		48	V
UV_{SUP}	Under voltage V_{SUP} threshold		2.9		3.85	V
UV_{HYS}	Delta hysteresis voltage for V_{SUP} under voltage threshold			0.2		V
I_{SUP}	Supply Current	Normal Mode: EN = High, bus dominant: total bus load where R_{LIN} > 500 Ω and C_{LIN} < 10 nF See Figure 7-7		1.2	7.5	mA
I_{SUP}	Supply Current	Standby Mode: EN = Low, bus dominant: total bus load where R_{LIN} > 500 Ω and C_{LIN} < 10 nF See Figure 7-7		1.1	3.75	mA
I_{SUP}	Supply Current	Normal Mode: EN = High, Bus Recessive: LIN = V_{SUP},		670	1300	µA
I_{SUP}	Supply Current	Standby Mode: EN = Low, Bus Recessive: LIN = V_{SUP},		20	40	µA
I_{SUP}	Supply Current	Sleep Mode: 4.0 V < V_{SUP} < 14 V, LIN = V_{SUP}, EN = 0 V, TXD and RXD Floating		10	20	µA
I_{SUP}	Supply Current	Sleep Mode: 14 V < V_{SUP} < 36 V, LIN = V_{SUP}, EN = 0 V, TXD and RXD Floating			30	µA

Copyright © 2022 Texas Instruments Incorporated

6.6 Electrical Characteristics (continued)

over operating free-air temperature range (unless otherwise noted)

PARAMETER		TEST CONDITIONS	MIN	TYP	MAX	UNIT
RXD OUTPUT PIN (OPEN DRAIN)						
V_{OL}	Output Low voltage	Based upon External pull up to V_{CC}			0.6	V
I_{OL}	Low level output current, open drain	LIN = 0 V, RXD = 0.4 V	1.5			mA
I_{ILG}	Leakage current, high-level	LIN = V_{SUP}, RXD = 5 V	–5	0	5	µA
TXD INPUT PIN						
V_{IL}	Low level input voltage		–0.3		0.8	V
V_{IH}	High level input voltage		2		5.5	V
V_{HYS}	Input threshold voltage, normal modes& selective wake modes			50	500	mV
I_{ILG}	Low level input leakage current	TXD = Low	–5	0	5	µA
R_{TXD}	Interal pulldown resitor value		125	350	800	kΩ
EN INPUT PIN						
V_{IL}	Low level input voltage		–0.3		0.8	V
V_{IH}	High level input voltage		2		5.5	V
V_{HYS}	Hysteresis voltage	By design and characterization		50	500	mV
I_{ILG}	Low level input current	EN = Low	–5	0	5	µA
R_{EN}	Internal Pulldown resistor		125	350	800	kΩ
LIN PIN						
V_{OH}	High level output voltage	LIN recessive, TXD = high, I_O = 0 mA, V_{SUP} = 7 V to 58 V	0.85			V_{SUP}
		LIN recessive, TXD = high, I_O = 0 mA, V_{SUP} = 4 V ≤ V_{SUP} < 7 V	3			V
V_{OL}	Low level output voltage	LIN dominant, TXD = low, V_{SUP} = 7 V to 58 V			0.2	V_{SUP}
		LIN dominant, TXD = low, V_{SUP} = 4 V ≤ V_{SUP} < 7 V			1.2	V
$V_{SUP_NON_OP}$	V_{SUP} where Impact of recessive LIN Bus < 5% (ISO/DIS 17987 Param 56)	TXD & RXD open LIN = 4 V to 58 V	–0.3		58	V
I_{BUS_LIM}	Limiting current (ISO/DIS 17987 Param 57)	TXD = 0 V, V_{LIN} = 48 V, R_{MEAS} = 440 Ω, V_{SUP} = 48 V, V_{BUSdom} < 4.518 V See Figure 7-6	75	120	300	mA
$I_{BUS_PAS_dom}$	Receiver leakage current, dominant (ISO/DIS 17987 Param 58)	LIN = 0 V, V_{SUP} = 24 V Driver off/ recessive See Figure 7-7	–2			mA
$I_{BUS_PAS_rec1}$	Receiver leakage current, recessive (ISO/DIS 17987 Param 59)	LIN > V_{SUP}, 8 V < V_{SUP} < 48 V Driver off; See Figure 7-8			20	µA
$I_{BUS_PAS_rec2}$	Receiver leakage current, recessive (ISO/DIS 17987 Param , 59)	LIN = V_{SUP}, Driver off; See Figure 7-8	–5		5	µA
$I_{BUS_NO_GND}$	Leakage current, loss of ground (ISO/DIS 17987 Param 60)	GND = V_{SUP}, 0 V ≤ V_{LIN} ≤ 36 V, V_{SUP} = 24 V; See Figure 7-9	–2		2	mA
$I_{BUS_NO_BAT}$	Leakage current, loss of supply (ISO/DIS 17987 Param 61)	0 V ≤ V_{LIN} ≤ 48 V, V_{SUP} = GND; See Figure 7-10			5	µA
V_{BUSdom}	Low level input voltage (ISO/DIS 17987 Param , 62)	LIN dominant (including LIN dominant for wake up) See Figure 7-3 and Figure 7-4			0.4	V_{SUP}
V_{BUSrec}	High level input voltage (ISO/DIS 17987 Param , 63)	Lin recessive See Figure 7-3 and Figure 7-4	0.6			V_{SUP}
V_{BUS_CNT}	Receiver center threshold (ISO/DIS 17987 Param , 64)	V_{BUS_CNT} = (V_{I_DOM} + V_{I_REC})/2 See Figure 7-3 and Figure 7-4	0.475	0.5	0.525	V_{SUP}
V_{HYS}	Hysteresis voltage (ISO/DIS 17987 Param , 65)	V_{HYS} = (V_{I_REC} - V_{I_DOM}) See Figure 7-3 and Figure 7-4			0.175	V_{SUP}

Copyright © 2022 Texas Instruments Incorporated

6.6 Electrical Characteristics (continued)

over operating free-air temperature range (unless otherwise noted)

PARAMETER		TEST CONDITIONS	MIN	TYP	MAX	UNIT
V_{SERIAL_DIODE}	Serial diode LIN term pullup path (ISO/DIS 17987 Param , 66)	By design and characterization	0.4	0.7	1	V
$R_{RESPONDER}$	Pullup resistor to VSUP (ISO/DIS 17987 Param , 71)	Normal and Standby modes	20	45	60	kΩ
I_{RSLEEP}	Pullup current source to VSUP	Sleep mode, V_{SUP} = 27 V, LIN = GND	–20		–2	µA
C_{LINPIN}	Capacitance of LIN pin	V_{SUP} = 14 V			25	pF

6.7 Switching Characteristics[2]

over operating free-air temperature range (unless otherwise noted)

PARAMETER		TEST CONDITIONS	MIN	TYP	MAX	UNIT
$D1_{12V}$	Duty Cycle 1 (ISO/DIS 17987 Param 27)[1]	$TH_{REC(MAX)}$ = 0.744 x V_{SUP}, $TH_{DOM(MAX)}$ = 0.581 x V_{SUP}, V_{SUP} = 7 V to 18 V, t_{BIT} = 50 µs (20 kbps), D1 = $t_{BUS_rec(min)}$/(2 x t_{BIT}) (See Figure 7-11 and Figure 7-12)	0.396			
$D1_{12V}$	Duty Cycle 1	$TH_{REC(MAX)}$ = 0.625 x V_{SUP}, $TH_{DOM(MAX)}$ = 0.581 x V_{SUP}, V_{SUP} = 4 V to 7 V, t_{BIT} = 50 µs (20 kbps), D1 = $t_{BUS_rec(min)}$/(2 x t_{BIT}) (See Figure 7-11 and Figure 7-12)	0.396			
$D2_{12V}$	Duty Cycle 2 (ISO/DIS 17987 Param 28)	$TH_{REC(MIN)}$ = 0.422 x V_{SUP}, $TH_{DOM(MIN)}$ = 0.284 x V_{SUP}, V_{SUP} = 7.6 V to 18 V, t_{BIT} = 50 µs (20 kbps), D2 = $t_{BUS_rec(MAX)}$/(2 x t_{BIT}) (See Figure 7-11 and Figure 7-12)			0.581	
$D3_{12V}$	Duty Cycle 3 (ISO/DIS 17987 Param 29)	$TH_{REC(MAX)}$ = 0.778 x V_{SUP}, $TH_{DOM(MAX)}$ = 0.616 x V_{SUP}, V_{SUP} = 7 V to 18 V, t_{BIT} = 96 µs (10.4 kbps), D3 = $t_{BUS_rec(min)}$/(2 x t_{BIT}) (See Figure 7-11 and Figure 7-12)	0.417			
$D3_{12V}$	Duty Cycle	$TH_{REC(MAX)}$ = 0.645 x V_{SUP}, $TH_{DOM(MAX)}$ = 0.616 x V_{SUP}, V_{SUP} = 4 V to 7 V, t_{BIT} = 96 µs (10.4 kbps), D3 = $t_{BUS_rec(min)}$/(2 x t_{BIT}) (See Figure 7-11 and Figure 7-12)	0.417			
$D4_{12V}$	Duty Cycle 4 (ISO/DIS 17987 Param 30)	$TH_{REC(MIN)}$ = 0.389 x V_{SUP}, $TH_{DOM(MIN)}$ = 0.251 x V_{SUP}, V_{SUP} = 7.6 V to 18 V, t_{BIT} = 96 µs (10.4 kbps), D4 = $t_{BUS_rec(MAX)}$/(2 x t_{BIT}) (See Figure 7-11 and Figure 7-12)			0.59	
$D1_{24V}$	Duty Cycle 1 (ISO/DIS 17987 Param 27)[1]	$TH_{REC(MAX)}$ = 0.710 x V_{SUP}, $TH_{DOM(MAX)}$ = 0.544 x V_{SUP}, V_{SUP} = 15 V to 36 V, t_{BIT} = 50 µs (20 kbps), D1 = $t_{BUS_rec(min)}$/(2 x t_{BIT}) (See Figure 7-11 and Figure 7-12)	0.33			
$D2_{24V}$	Duty Cycle 2 (ISO/DIS 17987 Param 28)	$TH_{REC(MIN)}$ = 0.446 x V_{SUP}, $TH_{DOM(MIN)}$ = 0.302 x V_{SUP}, V_{SUP} = 15.6 V to 36 V, t_{BIT} = 50 µs (20 kbps), D2 = $t_{BUS_rec(MAX)}$/(2 x t_{BIT}) (See Figure 7-11 and Figure 7-12)			0.642	
$D3_{24V}$	Duty Cycle 3 (ISO/DIS 17987 Param 29)	$TH_{REC(MAX)}$ = 0.744 x V_{SUP}, $TH_{DOM(MAX)}$ = 0.581 x V_{SUP}, V_{SUP} = 7 V to 36 V, t_{BIT} = 96 µs (10.4 kbps), D3 = $t_{BUS_rec(min)}$/(2 x t_{BIT}) (See Figure 7-11 and Figure 7-12)	0.386			
$D3_{24V}$	Duty Cycle	$TH_{REC(MAX)}$ = 0.645 x V_{SUP}, $TH_{DOM(MAX)}$ = 0.581 x V_{SUP}, V_{SUP} = 4 V to 7 V, t_{BIT} = 96 µs (10.4 kbps), D3 = $t_{BUS_rec(min)}$/(2 x t_{BIT}) (See Figure 7-11 and Figure 7-12)	0.386			

Copyright © 2022 Texas Instruments Incorporated

6.7 Switching Characteristics[(2)] (continued)

over operating free-air temperature range (unless otherwise noted)

PARAMETER		TEST CONDITIONS	MIN	TYP	MAX	UNIT
$D4_{24V}$	Duty Cycle 4 (ISO/DIS 17987 Param 30)	$TH_{REC(MIN)}$ = 0.442 x V_{SUP}, $TH_{DOM(MIN)}$ = 0.284 x V_{SUP}, V_{SUP} = 7.6 V to 36 V, t_{BIT} = 96 µs (10.4 kbps), D4 = $t_{BUS_rec(MAX)}$/(2 x t_{BIT}) (See Figure 7-11 and Figure 7-12)			0.591	

(1) Duty cycles: LIN driver bus load conditions (CLINBUS, RLINBUS): Load1 = 1 nF, 1 kΩ; Load2 = 10 nF, 500 Ω. Duty cycles 3 and 4 are defined for 10.4-kbps operation. The TLIN2022 also meets these lower data rate requirements, while it is capable of the higher speed 20-kbps operation as specified by duty cycles 1 and 2. SAEJ2602 derives propagation delay equations from the LIN 2.0 duty cycle definitions, for details see the SAEJ2602 specification

(2) See errata TLIN1022-Q1 and TLIN2022-Q1 Duty Cycle Over V_{SUP}

6.8 Timing Requirements

SYMBOL	DESCRIPTION	TEST CONDITIONS	MIN	NOM	MAX	UNIT
t_{rx_pdr}	Receiver rising propagation delay time (ISO/DIS 17987 Param 31)	R_{RXD} = 2.4 kΩ, C_{RXD} = 20 pF (See Figure 7-13 and Figure 7-14)			6	µs
t_{rx_pdf}	Receiver falling propagation delay time (ISO/DIS 17987 Param 31)				6	µs
t_{rs_sym}	Symmetry of receiver propagation delay time Receiver rising propagation delay time (ISO/DIS 17987 Param 32)	Rising edge with respect to falling edge, (trx_sym = trx_pdf – trx_pdr), R_{RXD} = 2.4 kΩ, C_{RXD} = 20 pF (See Figure 7-13 and Figure 7-14)	–2		2	µs
t_{LINBUS}	LIN wakeup time (Minimum dominant time on LIN bus for wakeup)	See Figure 7-17, Figure 7-2 and Figure 7-3	25	100	150	µs
t_{CLEAR}	Time to clear false wakeup prevention logic if LIN bus had a bus stuck dominant fault (recessive time on LIN bus to clear bust stuck dominant fault)	See Figure 7-3	8	17	50	µs
t_{DST}	Dominant state time out		20	34	80	ms
t_{MODE_CHANGE}	Mode change delay time	Time to change from standby mode to normal mode or normal mode to sleep mode through EN pin: See Figure 7-15 and Figure 7-4	2		15	µs
t_{NOMINT}	Normal mode initialization time	Time for normal mode to initialize and data on RXD pin to be valid See Figure 7-15			35	µs
t_{PWR}	Power up time	Upon power up time it takes for valid data on RXD			1.5	ms

Copyright © 2022 Texas Instruments Incorporated

6.9 Typical Characteristics

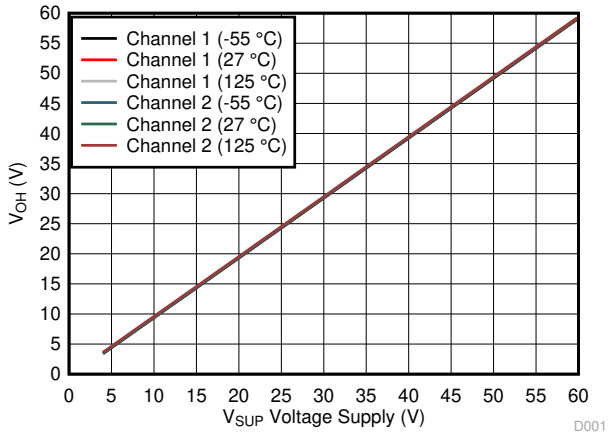

Figure 6-1. V_{OH} vs V_{SUP} and Temperature

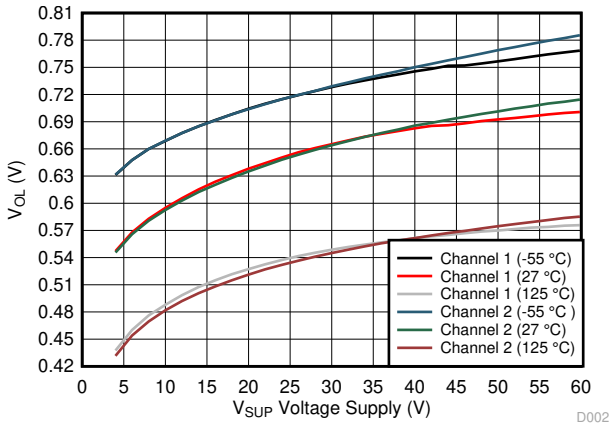

Figure 6-2. V_{OL} vs V_{SUP} and Temperature

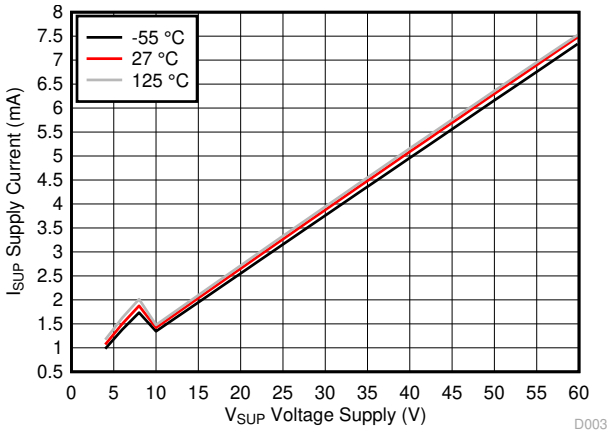

Normal Mode (Dominant)

Figure 6-3. Supply Current vs Voltage Supply Across Temperature

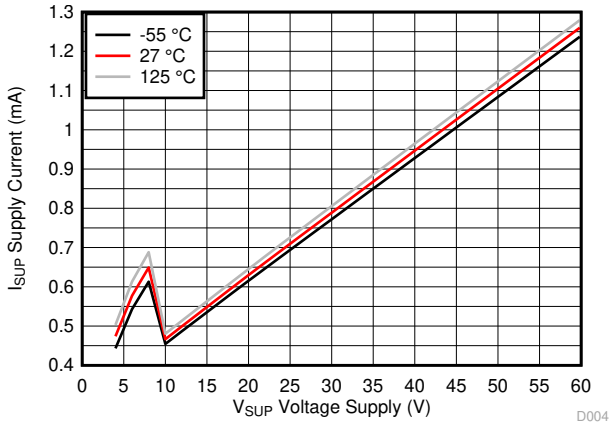

Normal Mode (Recessive)

Figure 6-4. Supply Current vs Voltage Supply Across Temperature

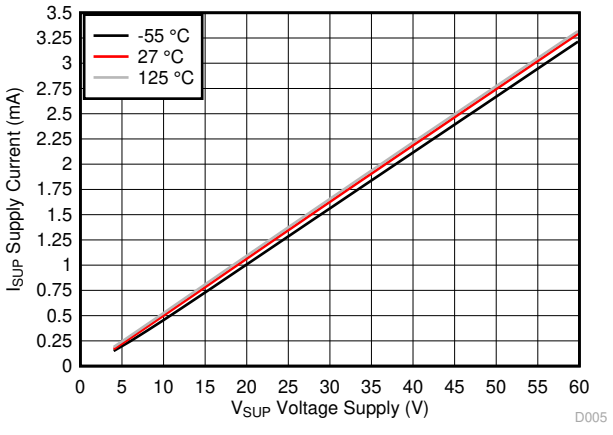

Standby Mode (Dominant)

Figure 6-5. Supply Current vs Voltage Supply and Temperature

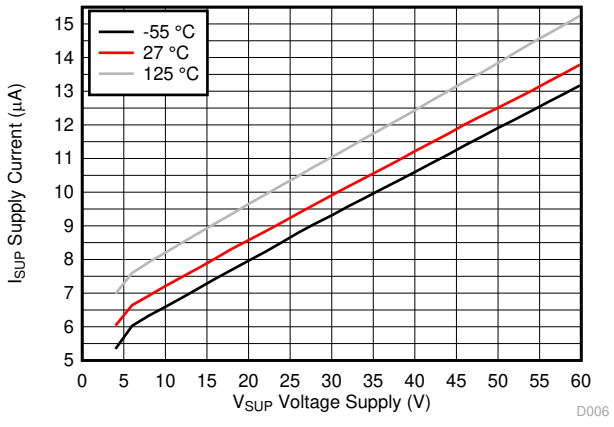

Standby Mode (Recessive)

Figure 6-6. Supply Current vs Voltage Supply and Temperature

Copyright © 2022 Texas Instruments Incorporated

6.9 Typical Characteristics (continued)

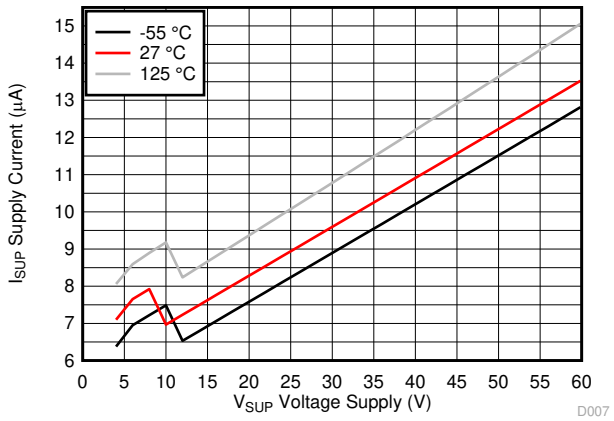

Sleep Mode

Figure 6-7. Supply Current vs Voltage Supply and Temperature

Copyright © 2022 Texas Instruments Incorporated

Parameter Measurement Information

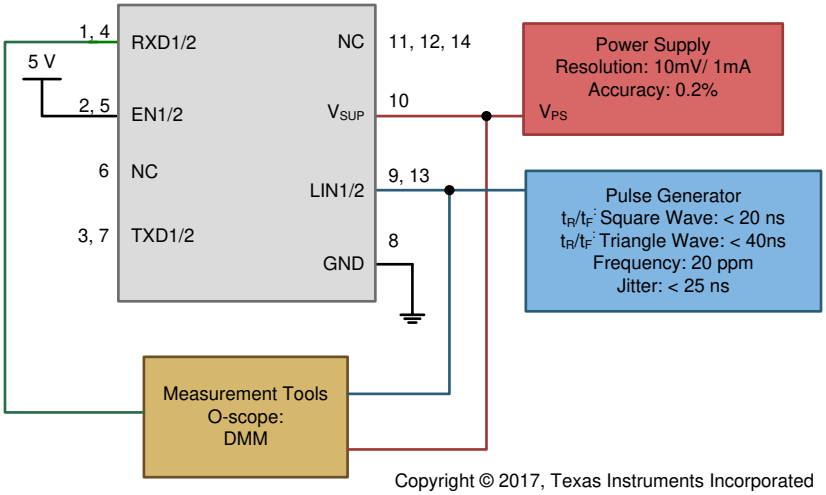

Figure 7-1. Test System: Operating Voltage Range with RX and TX Access: Parameters 9, 10

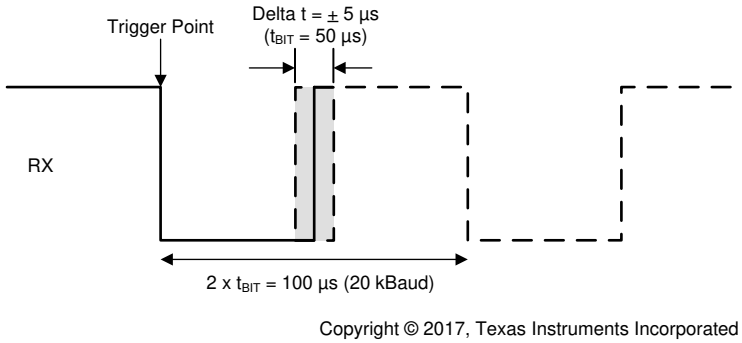

Figure 7-2. RX Response: Operating Voltage Range

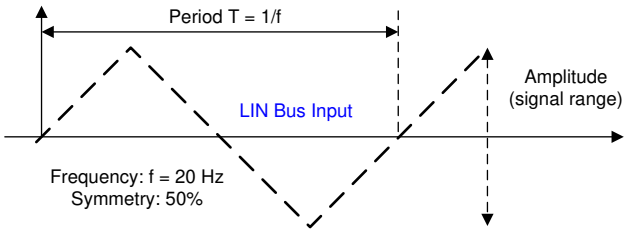

Figure 7-3. LIN Bus Input Signal

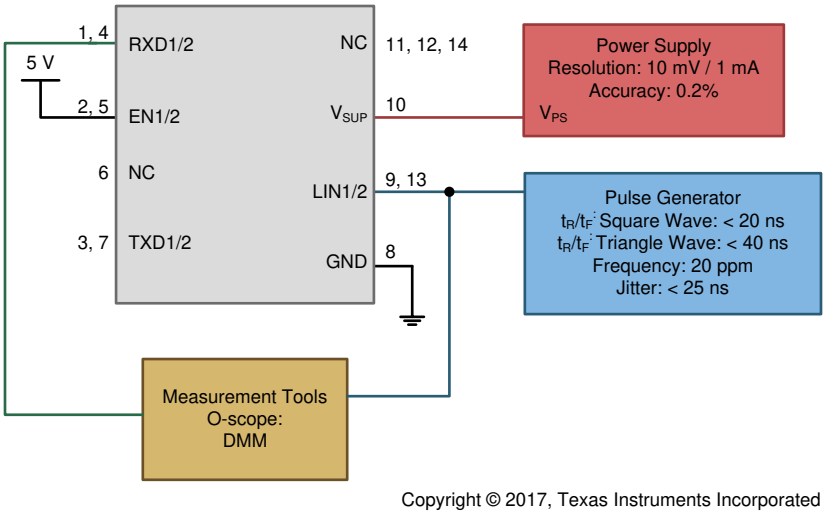

Figure 7-4. LIN Receiver Test with RX access Parameters 17, 18, 19, 20

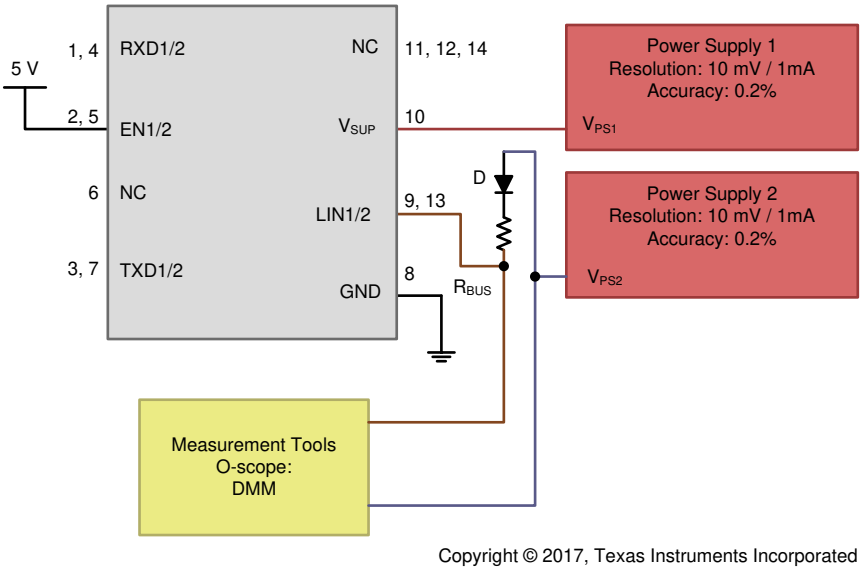

Figure 7-5. $V_{SUP_NON_OP}$ Parameters 11

Copyright © 2022 Texas Instruments Incorporated

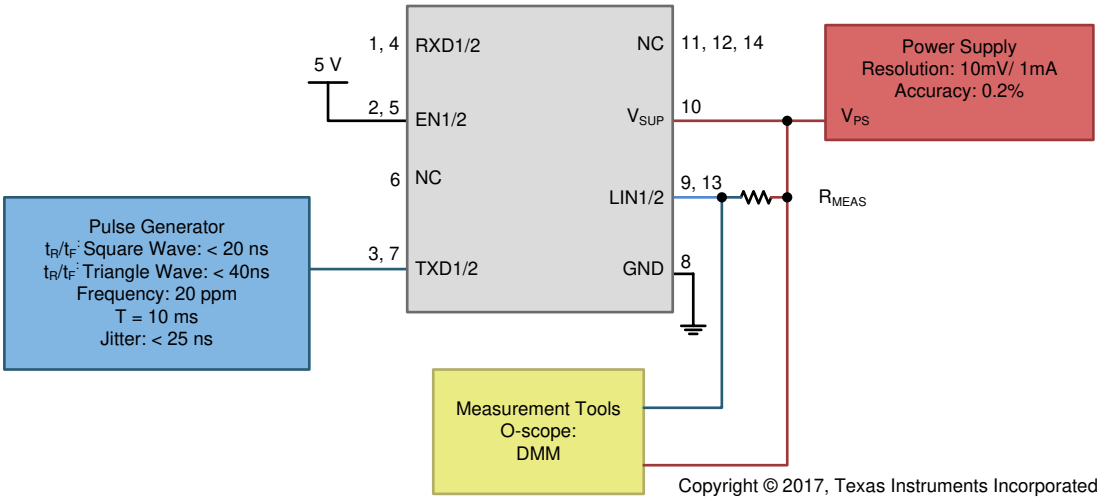

Figure 7-6. Test Circuit for I_{BUS_LIM} at Dominant State (Driver on) Parameters 12

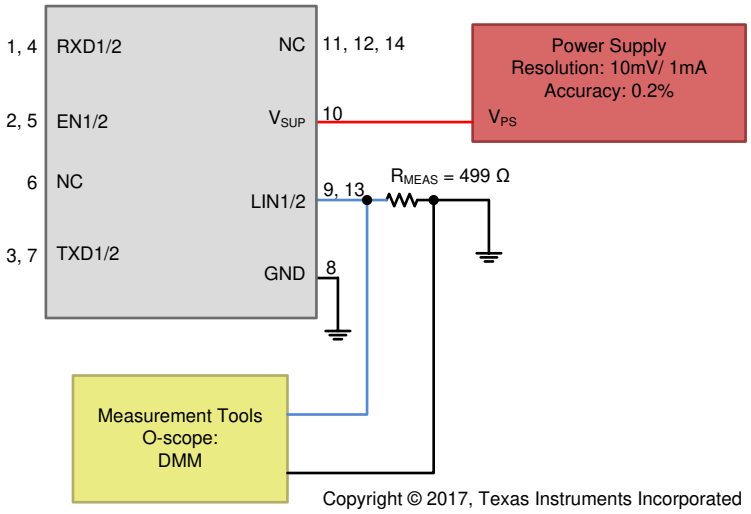

Figure 7-7. Test Circuit for $I_{BUS_PAS_dom}$; TXD = Recessive State V_{BUS} = 0 V, Parameters 13

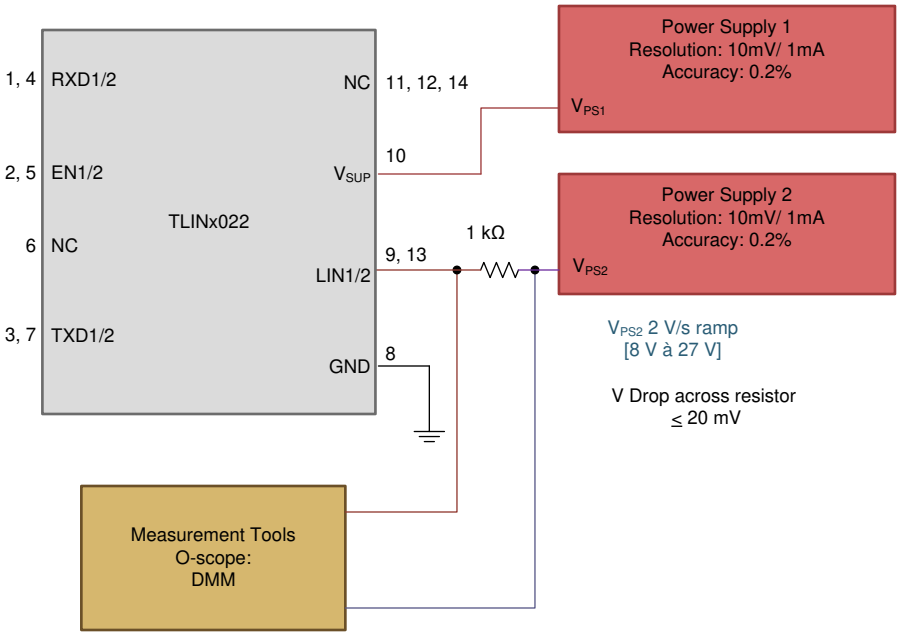

Figure 7-8. Test Circuit for $I_{BUS_PAS_rec}$ Param 14

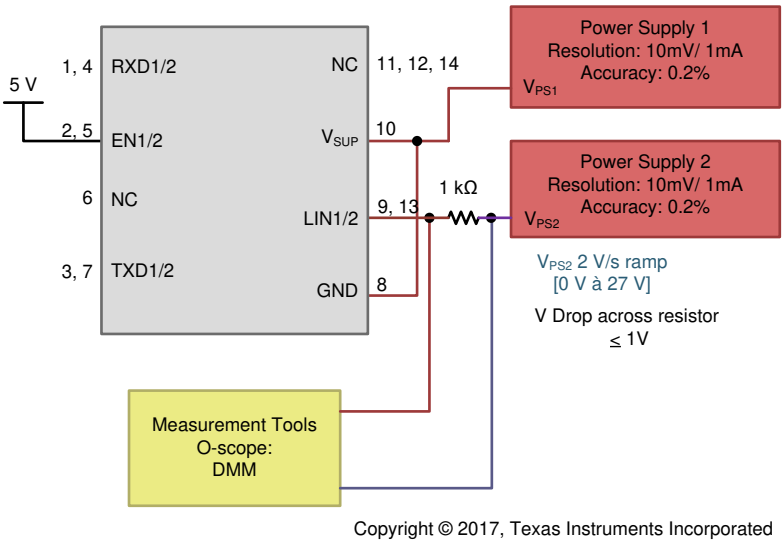

Copyright © 2017, Texas Instruments Incorporated

Figure 7-9. Test Circuit for $I_{BUS_NO_GND}$ Loss of GND

Copyright © 2022 Texas Instruments Incorporated

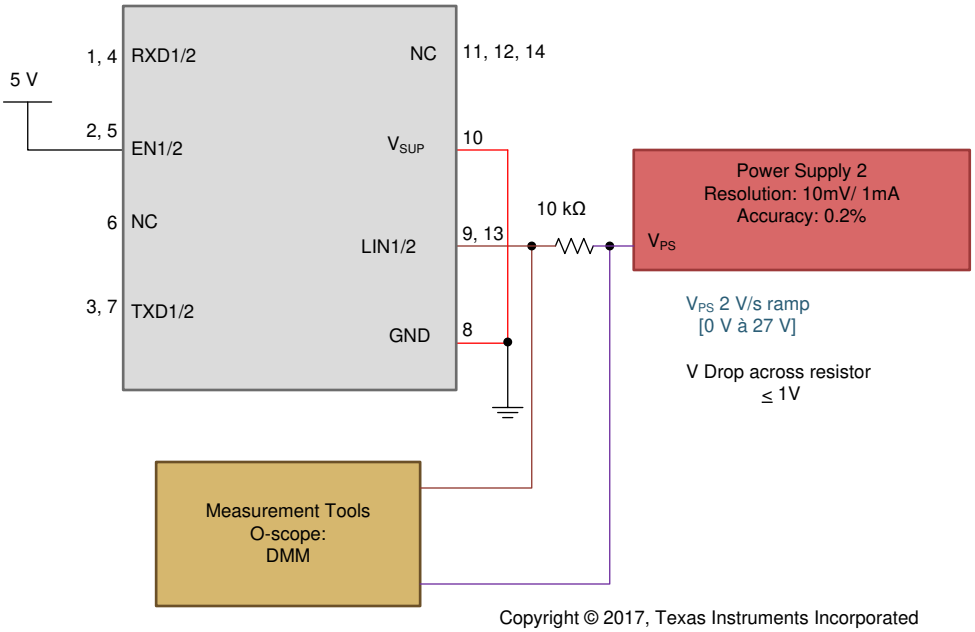

Figure 7-10. Test Circuit for $I_{BUS_NO_BAT}$ Loss of Battery

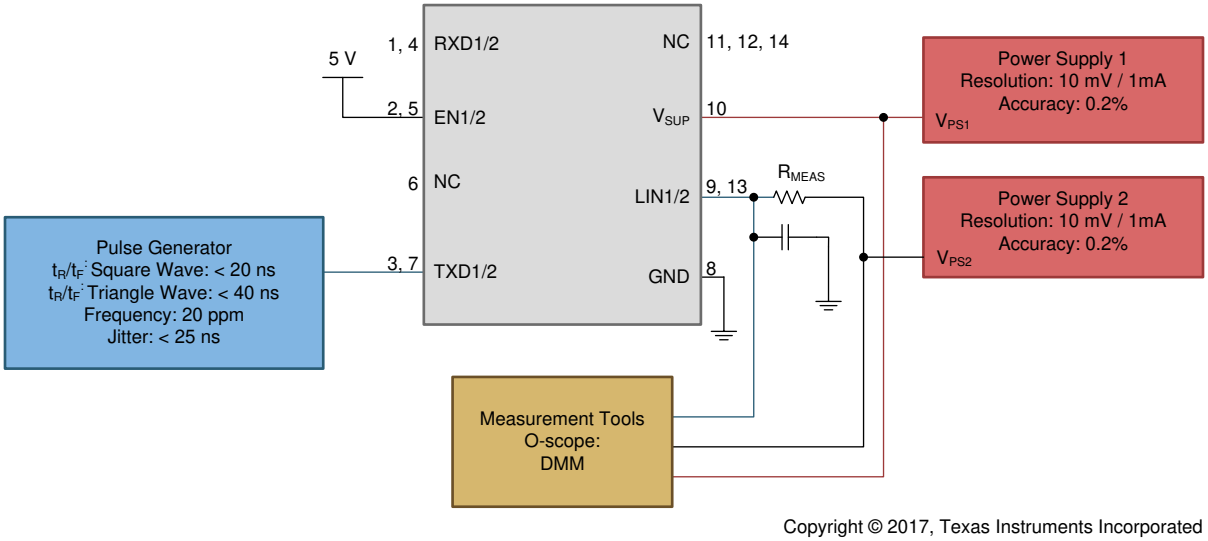

Figure 7-11. Test Circuit Slope Control and Duty Cycle Parameters 27, 28, 29, 30

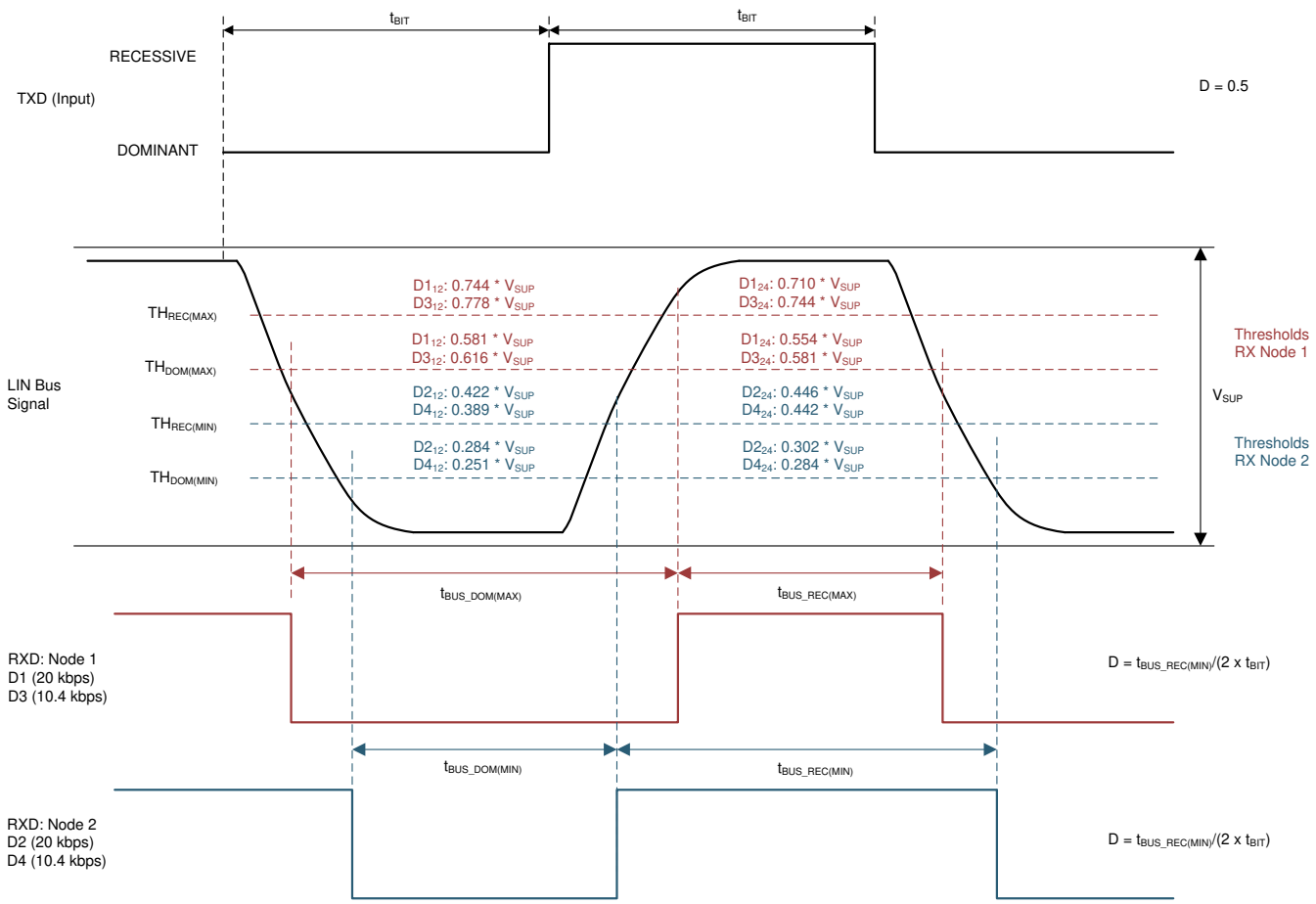

Figure 7-12. Definition of Bus Timing Parameters

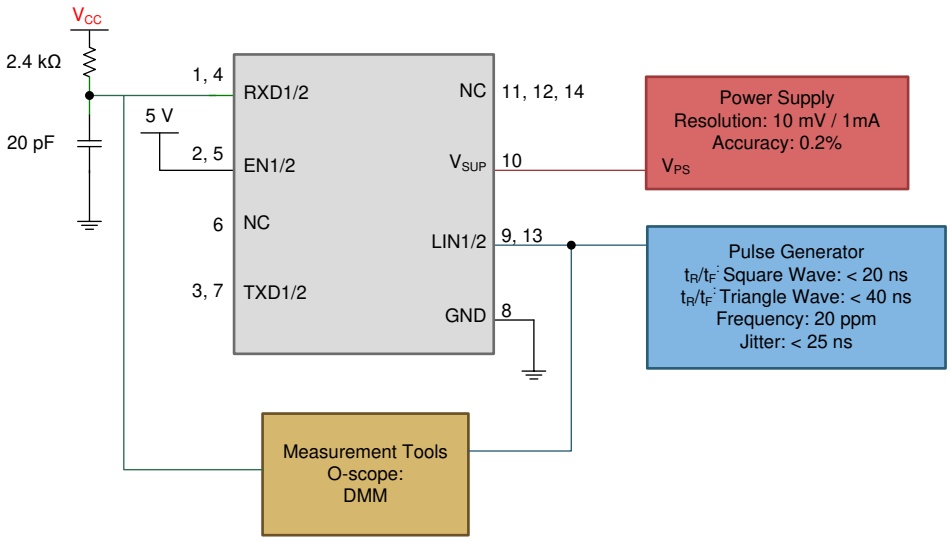

Copyright © 2017, Texas Instruments Incorporated

Figure 7-13. Propagation Delay Test Circuit; Parameters 31, 32

Copyright © 2022 Texas Instruments Incorporated

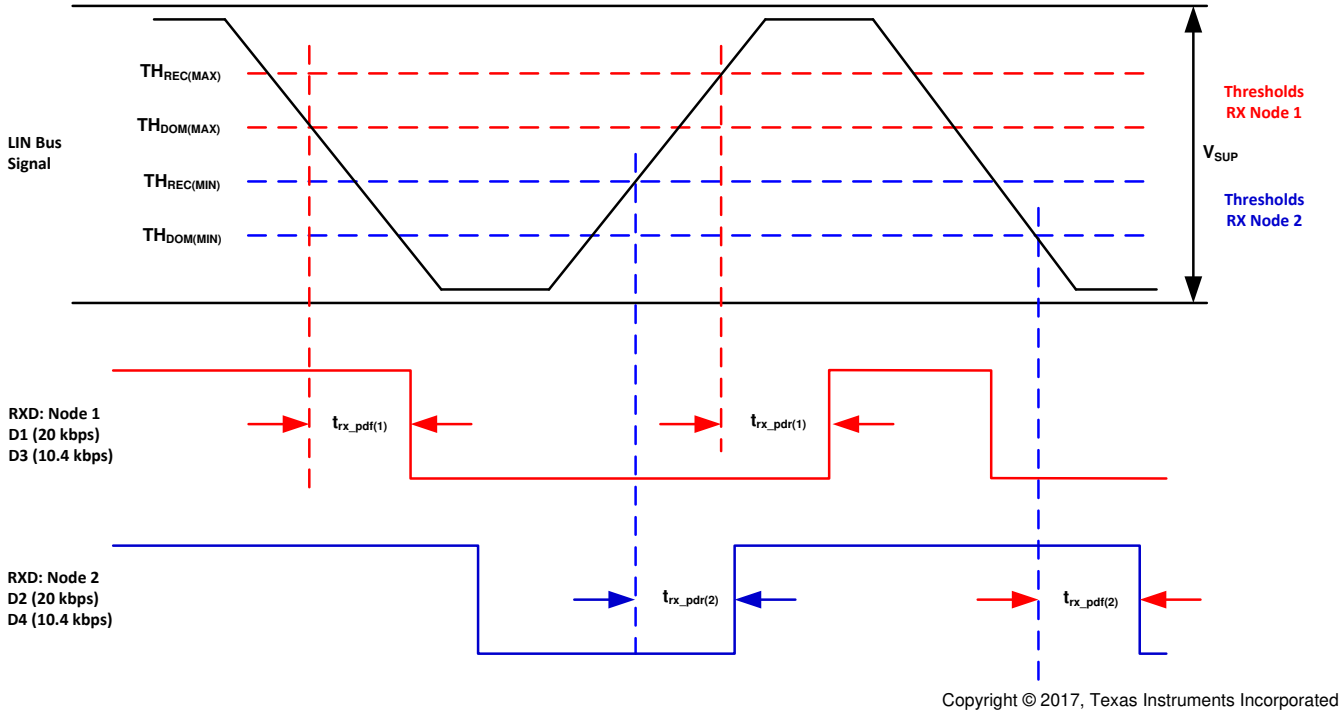

Figure 7-14. Propagation Delay

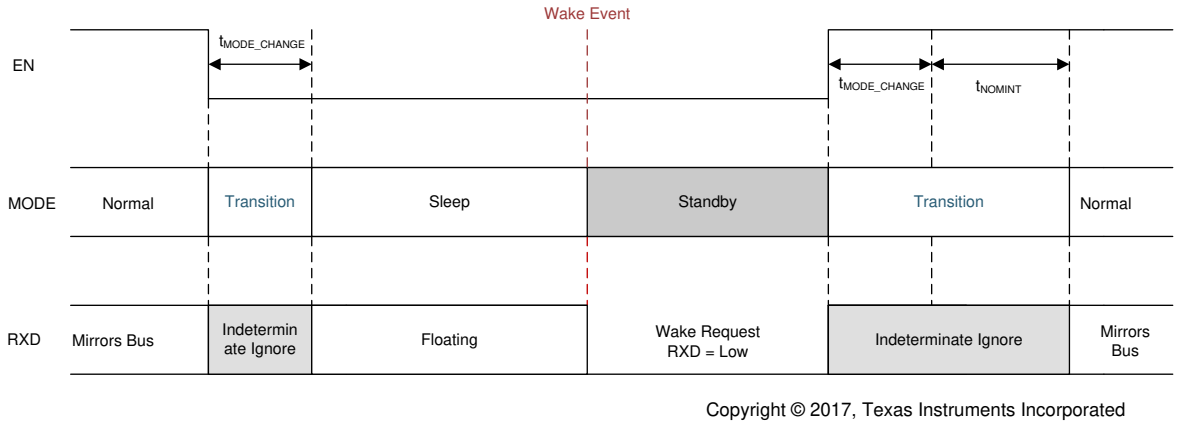

Figure 7-15. Mode Transitions

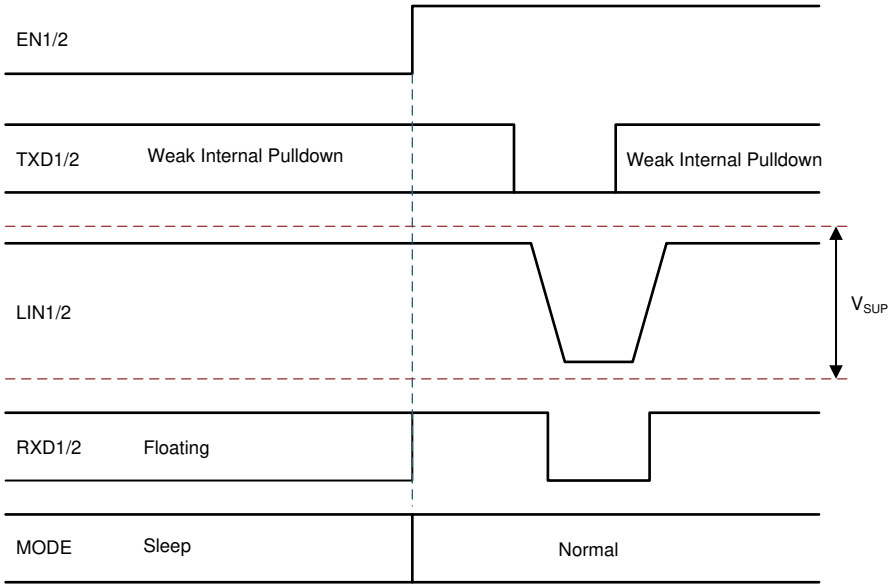

Figure 7-16. Wakeup Through EN

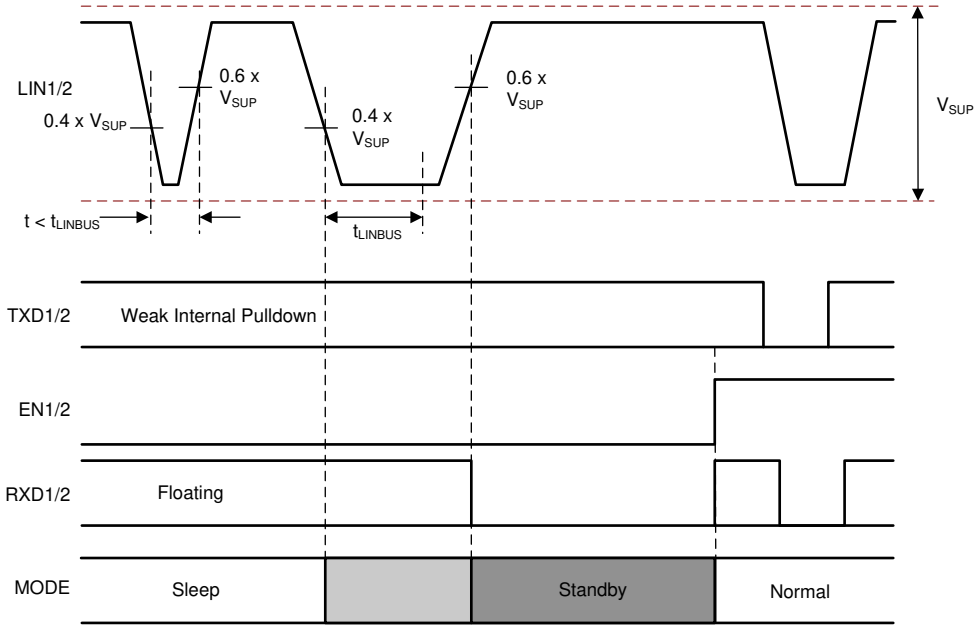

Figure 7-17. Wakeup through LIN

Copyright © 2022 Texas Instruments Incorporated

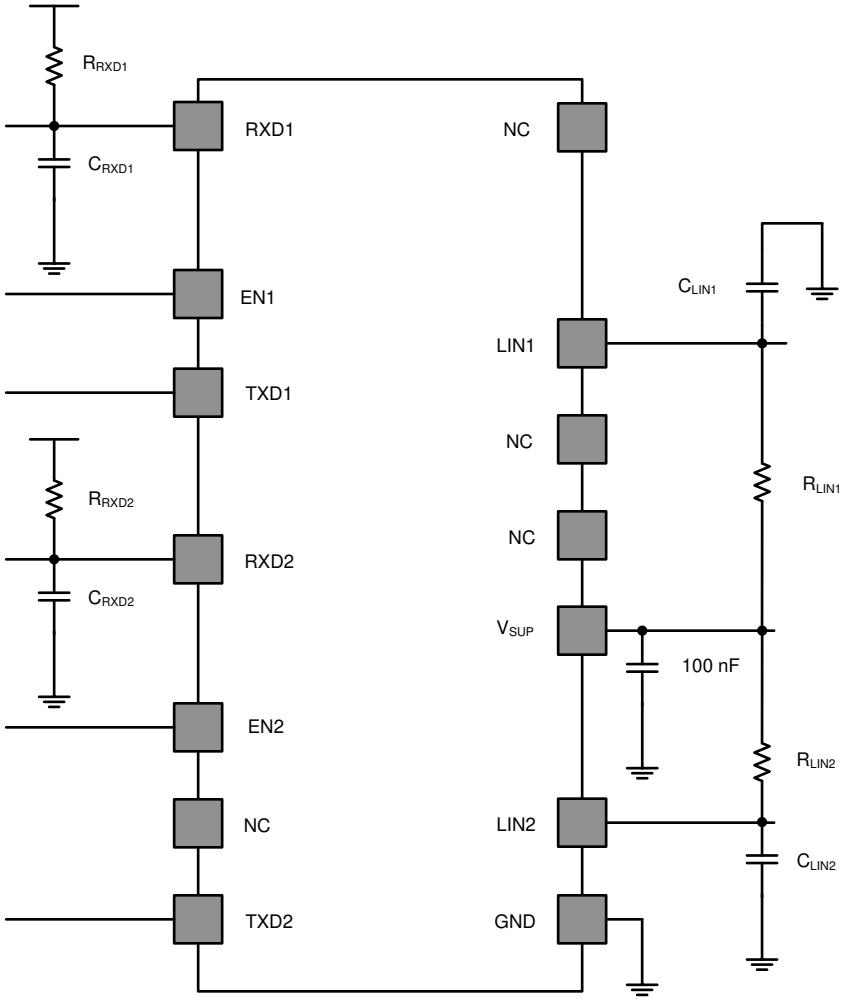

Figure 7-18. Test Circuit for AC Characteristics

7 Detailed Description

7.1 Overview

The TLIN2022-Q1 device is a Dual Local Interconnect Network (LIN) physical layer transceiver, compliant to LIN 2.0, LIN 2.1, LIN 2.2, LIN 2.2A and ISO/DIS 17987–4.2, with integrated wake-up and protection features. The LIN bus is a single wire bidirectional bus typically used for low speed in-vehicle networks using data rates from 2.4 kbps to 20 kbps. The device TLIN2022-Q1 LIN receiver works up to 100 kbps supporting in-line programming. The LIN protocol data stream on the TXD input is converted by the TLIN2022-Q1 into a LIN bus signal using a current-limited wave-shaping driver as outlined by the LIN physical layer specification. The receiver converts the data stream to logic level signals that are sent to the microprocessor through the open-drain RXD pin. The LIN bus has two states: dominant state (voltage near ground) and recessive state (voltage near battery). In the recessive state, the LIN bus is pulled high by the internal pull-up resistor (45 kΩ) and a series diode. No external pull-up components are required for responder applications. Commander applications require an external pull-up resistor (1 kΩ) plus a series diode per the LIN specification. The TLIN2022-Q1 provides many protection features such as ESD, EMC and high bus standoff voltage. The device also provides three methods to wake up, EN and from the LIN bus.

7.2 Functional Block Diagram

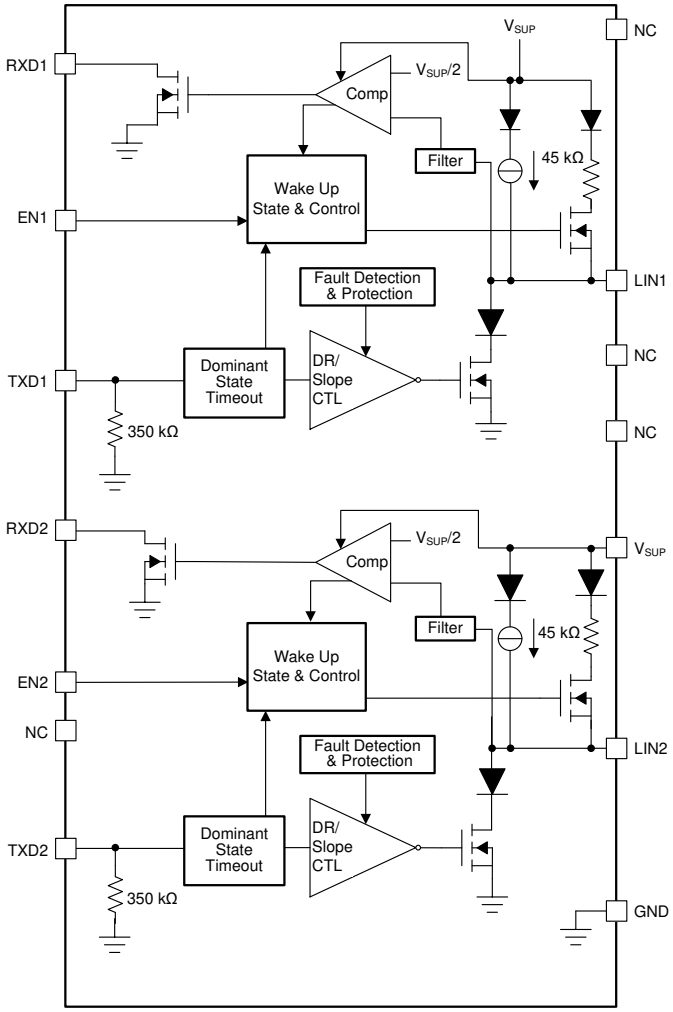

Copyright © 2022 Texas Instruments Incorporated

7.3 Feature Description

7.3.1 LIN (Local Interconnect Network) Bus

This high voltage input/output pin is a single wire LIN bus transmitter and receiver. The LIN pin can survive transient voltages up to 58 V. Reverse currents from the LIN to supply (V_{SUP}) are minimized with blocking diodes, even in the event of a ground shift or loss of supply (V_{SUP}).

7.3.1.1 LIN Transmitter Characteristics

The transmitter has thresholds and AC parameters according to the LIN specification. The transmitter is a low side transistor with internal current limitation and thermal shutdown. During a thermal shut-down condition, the transmitter is disabled to protect the device. There is an internal pull-up resistor with a serial diode structure to V_{SUP}, so no external pull-up components are required for the LIN responder mode applications. An external pull-up resistor and series diode to V_{SUP} must be added when the device is used for a commander node application.

7.3.1.2 LIN Receiver Characteristics

The receiver characteristic thresholds are proportional to the device supply pin according to the LIN specification.

The receiver is capable of receiving higher data rates (> 100 kbps) than supported by LIN or SAEJ2602 specifications. This allows the TLIN2022-Q1 to be used for high speed downloads at the end-of-line production or other applications. The actual data rate achievable depends on system time constants (bus capacitance and pull-up resistance) and driver characteristics used in the system.

7.3.1.2.1 Termination

There is an internal pull-up resistor with a serial diode structure to V_{SUP}, so no external pull-up components are required for the LIN responder mode applications. An external pull-up resistor (1 kΩ) and a series diode to V_{SUP} must be added when the device is used for commander node applications as per the LIN specification.

Figure 7-1 shows a Commander Node configuration and how the voltage levels are defined

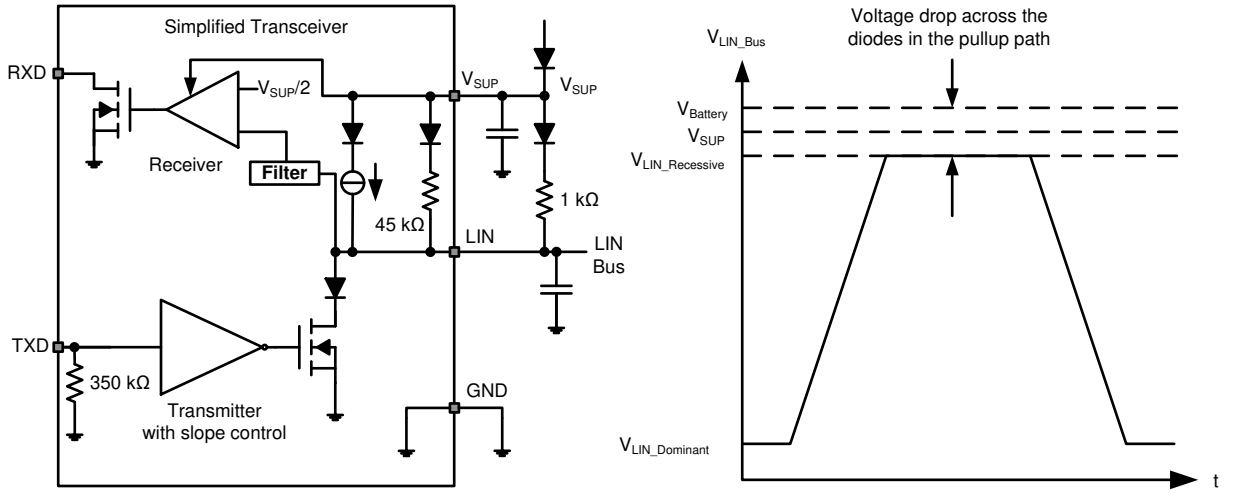

Copyright © 2017, Texas Instruments Incorporated

Figure 7-1. Commander Node Configuration with Voltage Levels

7.3.2 TXD (Transmit Input and Output)

TXD is the interface to the processors LIN protocol controller or SCI and UART that is used to control the state of the LIN output. When TXD is low the LIN output is dominant (near ground). When TXD is high the LIN output is recessive (near $V_{Battery}$). See Figure 7-1. The TXD input structure is compatible with processors using 3.3 V and 5 V I/O. TXD has an internal pull-down resistor. The LIN bus is protected from being stuck dominant through a system failure driving TXD low through the dominant state timer-out timer.

7.3.3 RXD (Receive Output)

RXD is the interface to the processors LIN protocol controller or SCI and UART, which reports the state of the LIN bus voltage. LIN recessive (near $V_{Battery}$) is represented by a high level on the RXD and LIN dominant (near ground) is represented by a low level on the RXD pin. The RXD output structure is an open-drain output stage. This allows the device to be used with 3.3 V and 5 V I/O processors. If the processors RXD pin does not have an integrated pull-up, an external pull-up resistor to the processors I/O supply voltage is required. In standby mode the RXD pin is driven low to indicate a wake up request from the LIN bus.

7.3.4 V_{SUP} (Supply Voltage)

V_{SUP} is the power supply pin. V_{SUP} is connected to the battery through and external reverse battery blocking diode (See Figure 7-1). If there is a loss of power at the ECU level, the device has extremely low leakage from the LIN pin, which does not load the bus down. This is optimal for LIN systems in which some of the nodes are unpowered (ignition supplied) while the rest of the network remains powered (battery supplied).

7.3.5 GND (Ground)

GND is the device ground connection. The device can operate with a ground shift as long as the ground shift does not reduce the V_{SUP} below the minimum operating voltage. If there is a loss of ground at the ECU level, the device has extremely low leakage from the LIN pin, which does not load the bus down. This is optimal for LIN systems in which some of the nodes are unpowered (ignition supplied) while the rest of the network remains powered (battery supplied).

7.3.6 EN (Enable Input)

EN controls the operational modes of the device. When EN is high the device is in normal operating mode allowing a transmission path from TXD to LIN and from LIN to RXD. When EN is low the device is put into sleep mode and there are no transmission paths available. The device can enter normal mode only after wake up. EN has an internal pull-down resistor to endure the device remains in low power mode even if EN floats.

7.3.7 Protection Features

The TLIN2022-Q1 has several protection features.

7.3.8 TXD Dominant Time Out (DTO)

During normal mode, if TXD is inadvertently driven permanently low by a hardware or software application failure, the LIN bus is protected by the dominant state timeout timer. This timer is triggered by a falling edge on the TXD pin. If the low signal remains on TXD for longer than t_{DST}, the transmitter is disabled, thus allowing the LIN bus to return to recessive state and communication to resume on the bus. The protection is cleared and the t_{DST} timer is reset by a rising edge on TXD. The TXD pin has an internal pull-down to ensure the device fails to a known state if TXD is disconnected. During this fault, the transceiver remains in normal mode (assuming no change of stated request on EN), the transmitter is disabled, the RXD pin reflects the LIN bus and the LIN bus pull-up termination remains on.

7.3.9 Bus Stuck Dominant System Fault: False Wake Up Lockout

The TLIN2022-Q1 contains logic to detect bus stuck dominant system faults and prevents the device from waking up falsely during the system fault. Upon entering sleep mode, the device detects the state of the LIN bus. If the bus is dominant, the wake up logic is locked out until a valid recessive on the bus “clears” the bus stuck dominant, preventing excessive current use. Figure 7-2 and Figure 7-3 show the behavior of this protection.

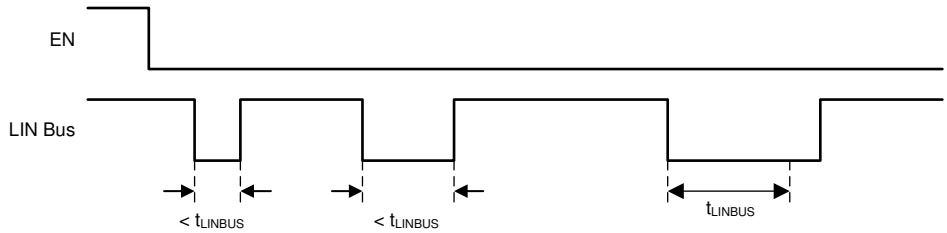

Figure 7-2. No Bus Fault: Entering Sleep Mode with Bus Recessive Condition and Wakeup

Copyright © 2022 Texas Instruments Incorporated

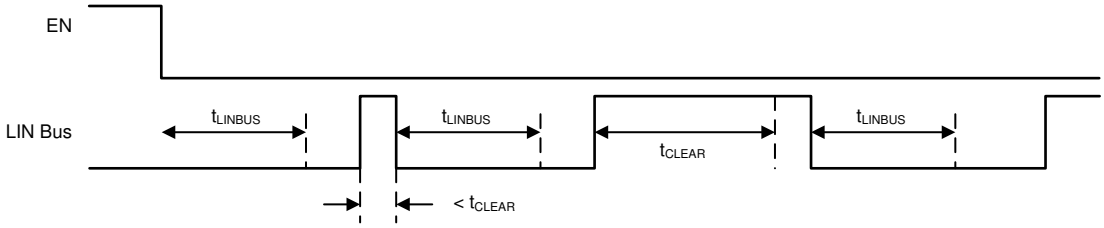

Figure 7-3. Bus Fault: Entering Sleep Mode with Bus Stuck Dominant Fault, Clearing, and Wakeup

7.3.10 Thermal Shutdown

The LIN transmitter is protected by limiting the current; however if the junction temperature of the device exceeds the thermal shutdown threshold, the device puts the LIN transmitter into the recessive state. Once the over temperature fault condition has been removed and the junction temperature has cooled beyond the hysteresis temperature, the transmitter is re-enabled, assuming the device remained in the normal operation mode. During this fault, the transceiver remains in normal mode (assuming no change of state request on EN), the transmitter is in recessive state, the RXD pin reflects the LIN bus and LIN bus pull-up termination remains on.

7.3.11 Under Voltage on V_{SUP}

The TLIN2022-Q1 contains a power on reset circuit to avoid false bus messages during under voltage conditions when V_{SUP} is less than UV_{SUP}.

7.3.12 Unpowered Device and LIN Bus

In automotive applications some LIN nodes in a system can be unpowered (ignition supplied) while others in the network remains powered by the battery. The TLIN2022-Q1 has a low unpowered leakage current from the bus so an unpowered node does not affect the network or load it down.

7.4 Device Functional Modes

The TLIN2022-Q1 has three functional modes of operation, normal, sleep, and standby. The next sections describe these modes as well as how the device moves between the different modes. Figure 7-4 graphically shows the relationship while Table 7-1 shows the state of pins.

Table 7-1. Operating Modes

MODE	EN	RXD	LIN BUS TERMINATION	TRANSMITTER	COMMENT
Sleep	Low	Floating	Weak Current Pullup	Off	
Standby	Low	Low	45 kΩ (typical)	Off	Wake up event detected, waiting on MCU to set EN
Normal	High	LIN Bus Data	45 kΩ (typical)	Off	LIN transmission up to 20 kbps

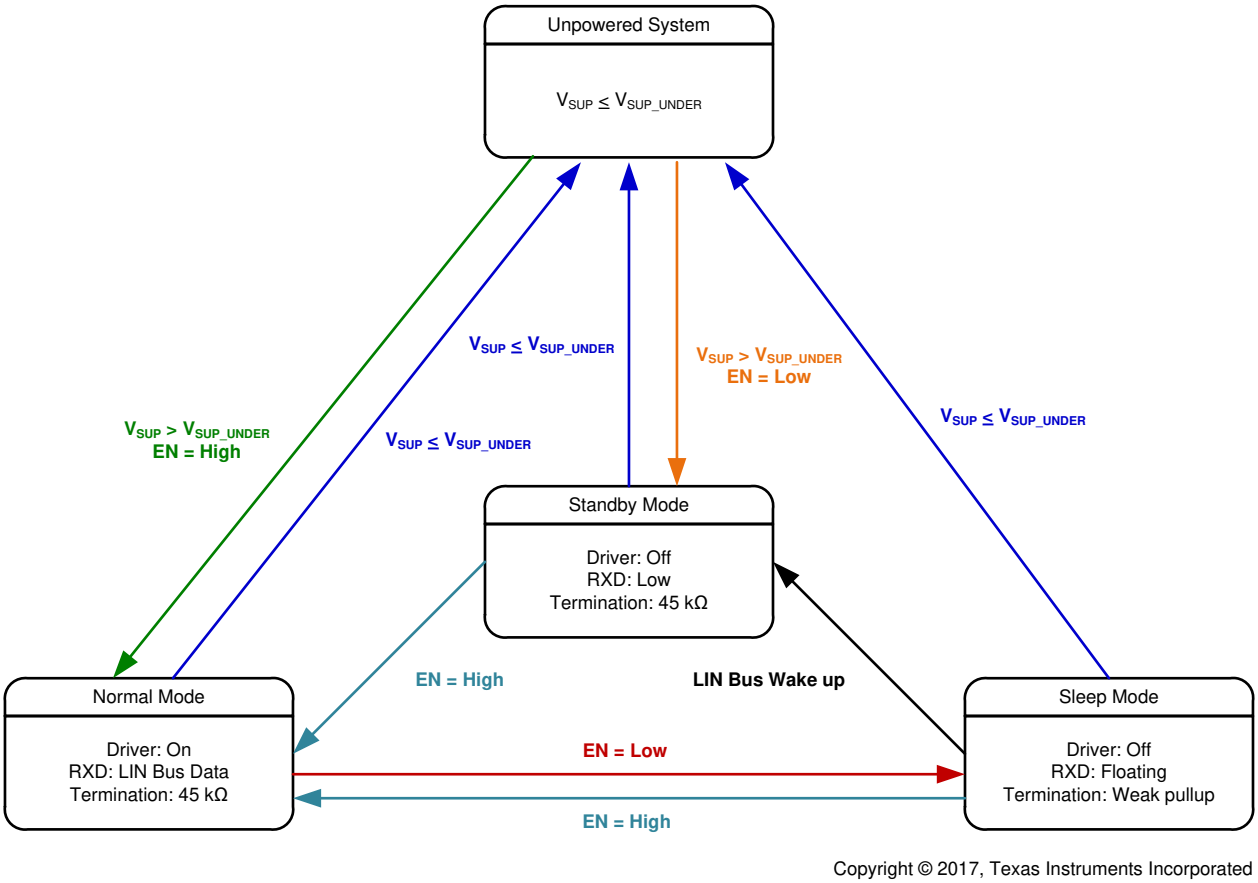

Figure 7-4. Operating State Diagram

7.4.1 Normal Mode

If the EN pin is high at power up, the device powers up in normal mode, and if in low, it powers up in standby mode. The EN pin controls the mode of the device. In normal operational mode, the receiver and transmitter are active and the LIN transmission up to the LIN specified maximum of 20 kbps is supported. The receiver detects the data stream on the LIN bus and outputs it on RXD for the LIN controller. A recessive signal on the LIN bus is a logic high and a dominate signal on the LIN bus is a logic low. The driver transmits input data from TXD to the LIN bus. Normal mode is entered as EN transitions high while the TLIN2022-Q1 is in sleep or standby mode for > t_{MODE_CHANGE}.

7.4.2 Sleep Mode

Sleep Mode is the power saving mode for the TLIN2022-Q1. Even with extremely low current consumption in this mode, the TLIN2022-Q1 can still wake up from LIN bus through a wake up signal or if EN is set high for > t_{MODE_CHANGE}. The Lin bus is filtered to prevent false wake up events. The wake up events must be active for the respective time periods (t_{LINBUS}).

Sleep mode is entered by setting EN low for longer than t_{MODE_CHANGE}.

While the device is in sleep mode, the following conditions exist.

- The LIN bus driver is disabled and the internal LIN bus termination is switched off (to minimize power loss if LIN is short circuited to ground). However, the weak current pull-up is active to prevent false wake up events in case an external connection to the LIN bus is lost.
- The normal receiver is disabled.
- EN input and LIN wake up receiver are active.

Copyright © 2022 Texas Instruments Incorporated

7.4.3 Standby Mode

This mode is entered whenever a wake up event occurs through LIN bus while the device is in sleep mode. The LIN bus responder termination circuit is turned on when standby mode is entered. Standby mode is signaled through a low level on RXD. See *Section 8.2.2.2* for more application information.

When EN is set high for longer than t_{MODE_CHANGE} while the device is in standby mode, the device returns to normal mode and the normal transmission paths from TXD to LIN bus and LIN bus to RXD are enabled.

7.4.4 Wake Up Events

There are two ways to wake up from sleep mode:

- Remote wake up initiated by the falling edge of a recessive (high) to dominant (low) state transition on LIN bus where the dominant state is held for t_{LINBUS} filter time. After this t_{LINBUS} filter time has been met and a rising edge on the LIN bus going from dominate state to recessive state initiates a remote wake up event, eliminating false wake ups from disturbances on the LIN bus or if the bus is shorted to ground.
- Local wake up through EN being set high for longer than t_{MODE_CHANGE}.

7.4.4.1 Wake Up Request (RXD)

When the TLIN2022-Q1 encounters a wake up event from the LIN bus, RXD goes low and the device transitions to standby mode until EN is reasserted high and the device enters normal mode. Once the device enters normal mode, the RXD pin is releasing the wake up request signal and the RXD pin then reflects the receiver output from the LIN bus.

7.4.4.2 Mode Transitions

When the TLIN2022-Q1 is transitioning between modes, the device needs the time, t_{MODE_CHANGE}, to allow the change to fully propagate from the EN pin through the device into the new state. When transitioning from sleep or standby mode to normal mode, the transition time is the sum of t_{MODE_CHANGE} and t_{NOMINT}

Copyright © 2022 Texas Instruments Incorporated

8 Application and Implementation

Note

Information in the following applications sections is not part of the TI component specification, and TI does not warrant its accuracy or completeness. TI's customers are responsible for determining suitability of components for their purposes. Customers should validate and test their design implementation to confirm system functionality.

8.1 Application Information

The TLIN2022-Q1 can be used as both a responder device and a commander device in a LIN network. The device comes with the ability to support both remote wake up request and local wake up request.

8.2 Typical Application

The device comes with an integrated 45 kΩ pull-up resistor and series diode for responder applications. For commander applications, an external 1 kΩ pull-up resistor with series blocking diode can be used. Figure 8-1 shows the device being used in both commander and responder applications.

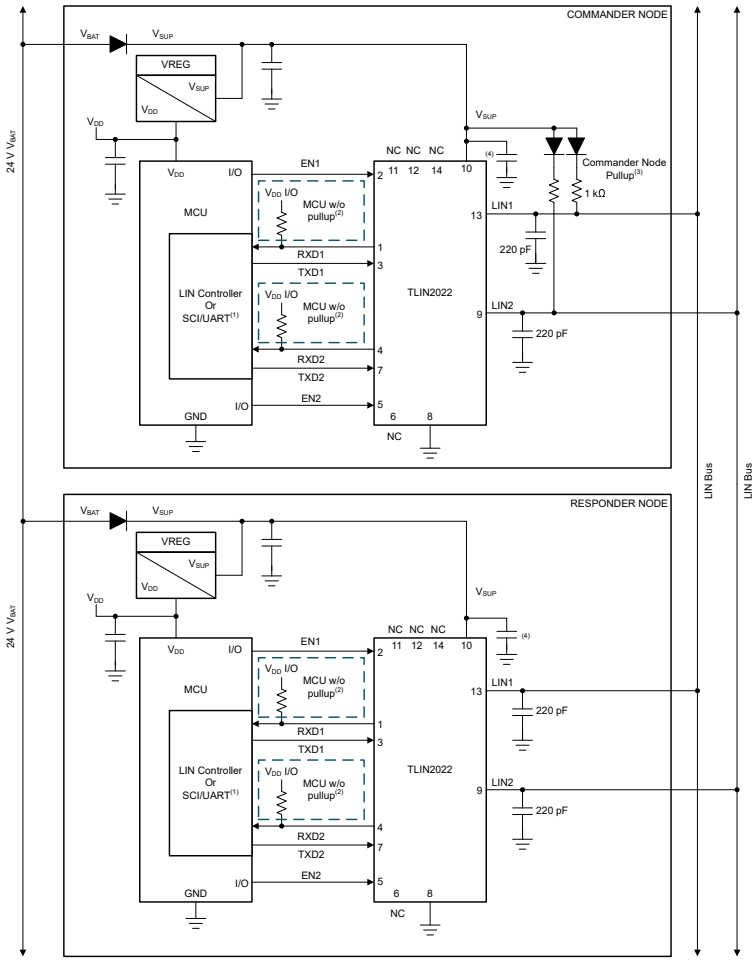

A. If RXD on MCU or LIN responder has internal pullup; no external pullup resistor is needed.
B. If RXD on MCU or LIN responder does not have an internal pullup requires external pullup resistor
C. Commander node applications require and external 1 kΩ pullup resistor and serial diode.
D. Decoupling capacitor values are system dependent but usually have 100 nF, 1 µF and ≥10 µF

Figure 8-1. Typical LIN Bus

Copyright © 2022 Texas Instruments Incorporated

8.2.1 Design Requirements

The RXD output structure is an open-drain output stage. This allows the TLIN2022-Q1 to be used with 3.3-V and 5-V I/O processor. If the RXD pin of the processor does not have an integrated pull-up, an external pull-up resistor to the processor I/O supply voltage is required. The select external pull-up resistor value should be between 1 kΩ to 10 kΩ. The V_{SUP} pin of the device should be decoupled with a 100 nF capacitor as close to the supply pin of the device as possible. The system should include 1 µF and ≥ 10 µF decoupling capacitors on V_{SUP} as per each application requirements.

8.2.2 Detailed Design Procedures

8.2.2.1 Normal Mode Application Note

When using the TLIN2022-Q1 in systems which are monitoring the RXD pin for a wake up request, special care should be taken during the mode transitions. The output of the RXD pin is indeterminate for the transition period between states as the receivers are switched. The application software should not look for an edge on the RXD pin indicating a wake up request until t when going from normal to sleep mode or t_{MODE_CHANGE} plus t_{NOMINT} when going from sleep or standby to normal mode. This is shown in Figure 7-15

8.2.2.2 Standby Mode Application Note

If the TLIN2022-Q1 detects an under voltage on V_{SUP} the RXD pin transitions low, and signals to the software that the TLIN2022-Q1 is in standby mode and should be returned to sleep mode for the lowest power state.

8.2.2.3 TXD Dominant State Timeout Application Note

The maximum dominant TXD time allowed by the TXD dominant state time out limits the minimum possible data rate of the device. The LIN protocol has different constraints for commander and responder applications thus there are different maximum consecutive dominant bits for each application case and thus different minimum data rates.

8.2.3 Application Curves

Figure 8-2 and Figure 8-3 show the propagation delay from the TXD pin to the LIN pin for both dominant to recessive and recessive to dominant stated under lightly loaded conditions.

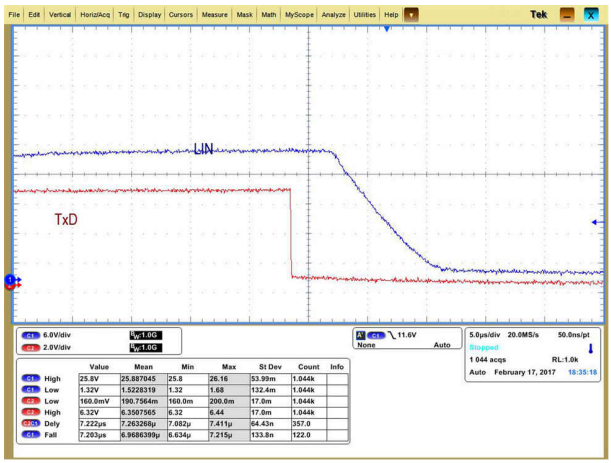

Figure 8-2. Dominant to Recessive Propagation

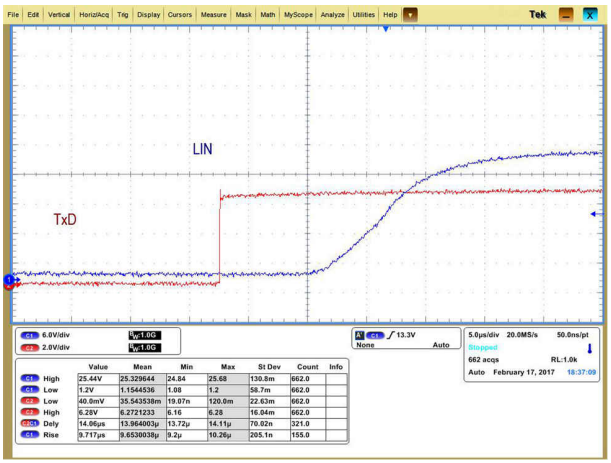

Figure 8-3. Recessive to Dominant Propagation

8.3 Power Supply Recommendations

The TLIN2022-Q1 was designed to operate directly off a car battery, or any other DC supply ranging from 4 V to 45 V. A 100 nF decoupling capacitor should be placed as close to the V_{SUP} pin of the device as possible.

8.4 Layout

In order for the PCB design to be successful, start with design of the protection and filtering circuitry. Because ESD and EFT transients have a wide frequency bandwidth from approximately 3 MHz to 3 GHz, high frequency layout techniques must be applied during PCB design. Placement at the connector also prevents these noisy events from propagating further into the PCB and system.

8.4.1 Layout Guidelines

- **Pin 1, 4 (RXD1/2):** The pin is an open drain outputs and require an external pull-up resistor in the range of 1 kΩ and 10 kΩ to function properly. If the microprocessor paired with the transceiver does not have an integrated pull-up, an external resistor should be placed between RXD and the regulated voltage supply for the microprocessor.
- **Pin 2, 5 (EN1/2):** EN is an input pin that is used to place the device in a low power sleep mode. If this feature is not used, the pin should be pulled high to the regulated voltage supply of the microprocessor through a series resistor, values between 1 kΩ and 10 kΩ. Additionally, a series resistor may be placed on the pinto limit current on the digital lines in the event of an over voltage fault.
- **Pin 6 (NC):** Not Connected.
- **Pin 3, 7 (TXD1/2):** The TXD pins are the transmitter input signals to the device from the processor. A series resistor can be placed to limit the input current to the device in the case of an over-voltage on this pin. A capacitor to ground can be placed close to the input pin of the device to filter noise.
- **Pin 8 (GND):** This is the ground connection for the device. This pin should be tied to the ground plane through a short trace with the use of two vias to limit total return inductance.
- **Pin 9, 13 (LIN1/2):** This pin connects to the LIN bus. For responder applications, a 220 pF capacitor to ground is implemented. For commander applications and additional series resistor, a blocking diode should be placed between the LIN pin and the V_{SUP} pin. See Figure 8-1.
- **Pin 10 (V_{SUP}):** This is the supply pin for the device. A 100 nF decoupling capacitor should be placed as close to the device as possible.
- **Pin 11, 12 and 14 (NC):** Not Connected.

Note

All ground and power connections should be made as short as possible and use at least two vias to minimize the total loop inductance.

Copyright © 2022 Texas Instruments Incorporated

8.4.2 Layout Example

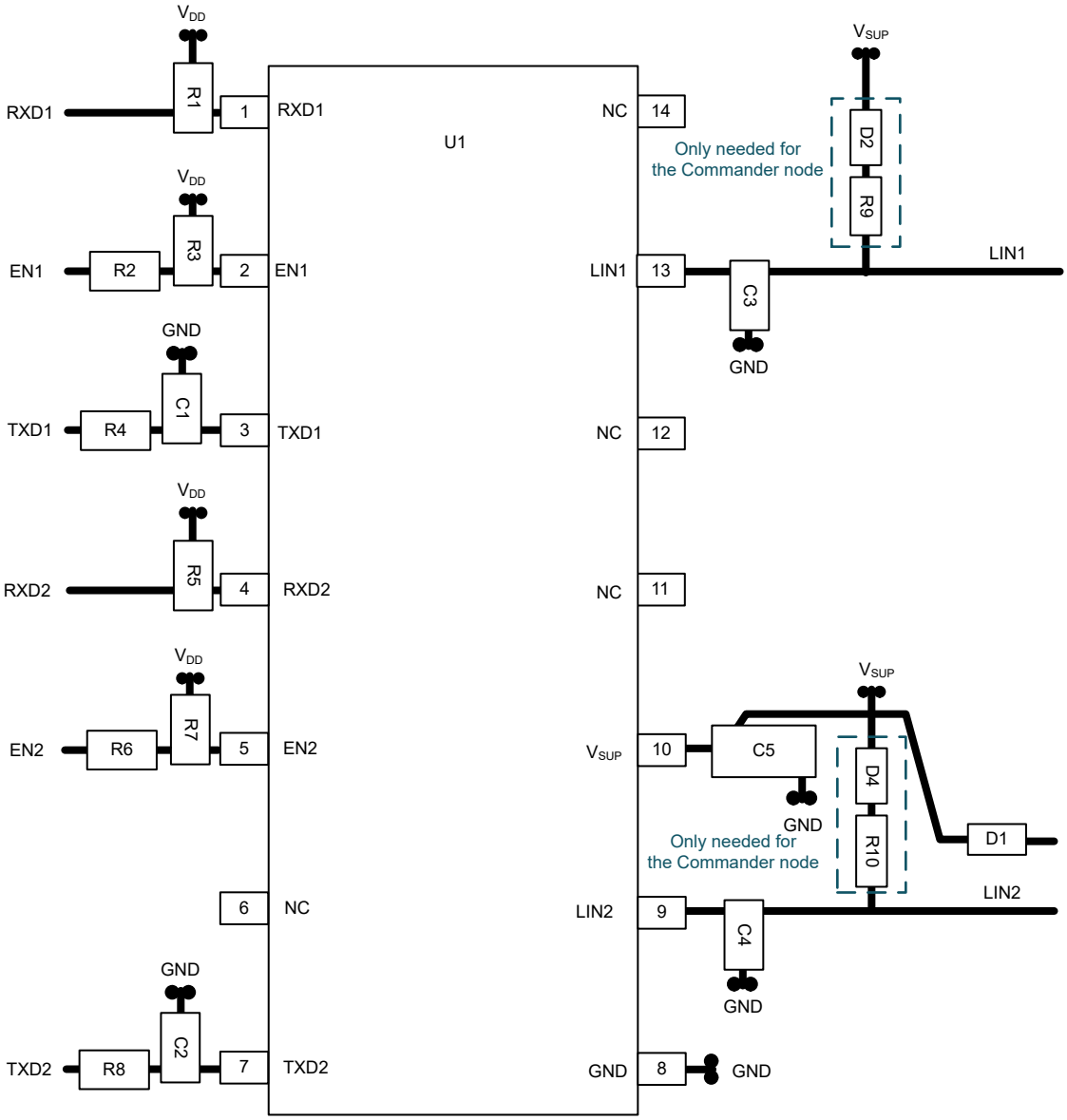

Figure 8-4. Layout Example

9 Device and Documentation Support

This device will conform to the following LIN standards. The core of what is needed is covered within this system spec, however reference should be made to these standards and any discrepancies pointed out and discussed. This document should provide all the basics of what is needed.

9.1 Documentation Support

9.1.1 Related Documentation

TLIN1022-Q1 and TLIN2022-Q1 Duty Cycle Over VSUP

For related documentation see the following:

- LIN Standards:
  - ISO/DIS 17987-1.2: Road vehicles -- Local Interconnect Network (LIN) -- Part 1: General information and use case definition
  - ISO/DIS 17987-4.2: Road vehicles -- Local Interconnect Network (LIN) -- Part 4: Electrical Physical Layer (EPL) specification 12V/24V
  - SAEJ2602-1: LIN Network for Vehicle Applications
  - LIN2.0, LIN2.1, LIN2.2 and LIN2.2A specification
- EMC requirements:
  - SAEJ2962-2: TBD
  - ISO 10605: Road vehicles - Test methods for electrical disturbances from electrostatic discharge
  - ISO 11452-4:2011: Road vehicles - Component test methods for electrical disturbances from narrowband radiated electromagnetic energy - Part 4: Harness excitation methods
  - ISO 7637-1:2015: Road vehicles - Electrical disturbances from conduction and coupling - Part 1: Definitions and general considerations
  - ISO 7637-3: Road vehicles - Electrical disturbances from conduction and coupling - Part 3: Electrical transient transmission by capacitive and inductive coupling via lines other than supply lines
  - IEC 62132-4:2006: Integrated circuits - Measurement of electromagnetic immunity 150 kHz to 1 GHz - Part 4: Direct RF power injection method
  - IEC 61000-4-2
  - IEC 61967-4
  - CISPR25
- Conformance Test requirements:
  - ISO/DIS 17987-7.2: Road vehicles -- Local Interconnect Network (LIN) -- Part 7: Electrical Physical Layer (EPL) conformance test specification
  - SAEJ2602-2: LIN Network for Vehicle Applications Conformance Test
-

9.2 Receiving Notification of Documentation Updates

To receive notification of documentation updates, navigate to the device product folder on ti.com. Click on *Subscribe to updates* to register and receive a weekly digest of any product information that has changed. For change details, review the revision history included in any revised document.

9.3 Support Resources

TI E2E™ support forums are an engineer's go-to source for fast, verified answers and design help — straight from the experts. Search existing answers or ask your own question to get the quick design help you need.

Linked content is provided "AS IS" by the respective contributors. They do not constitute TI specifications and do not necessarily reflect TI's views; see TI's Terms of Use.

9.4 Trademarks

TI E2E™ is a trademark of Texas Instruments.
All trademarks are the property of their respective owners.

Copyright © 2022 Texas Instruments Incorporated

9.5 Electrostatic Discharge Caution

This integrated circuit can be damaged by ESD. Texas Instruments recommends that all integrated circuits be handled with appropriate precautions. Failure to observe proper handling and installation procedures can cause damage.

ESD damage can range from subtle performance degradation to complete device failure. Precision integrated circuits may be more susceptible to damage because very small parametric changes could cause the device not to meet its published specifications.

9.6 Glossary

TI Glossary This glossary lists and explains terms, acronyms, and definitions.

10 Mechanical, Packaging, and Orderable Information

The following pages include mechanical, packaging, and orderable information. This information is the most current data available for the designated devices. This data is subject to change without notice and revision of this document. For browser-based versions of this data sheet, refer to the left-hand navigation.

PACKAGING INFORMATION

Orderable part number	Status (1)	Material type (2)	Package | Pins	Package qty | Carrier	RoHS (3)	Lead finish/ Ball material (4)	MSL rating/ Peak reflow (5)	Op temp (°C)	Part marking (6)
TLIN2022DMTRQ1	Active	Production	VSON (DMT) | 14	3000 | LARGE T&R	Yes	Call TI | Nipdau	Level-2-260C-1 YEAR	-40 to 125	TL022
TLIN2022DMTRQ1.A	Active	Production	VSON (DMT) | 14	3000 | LARGE T&R	Yes	NIPDAU	Level-2-260C-1 YEAR	-40 to 125	TL022
TLIN2022DMTTQ1	Active	Production	VSON (DMT) | 14	250 | SMALL T&R	Yes	Call TI | Nipdau	Level-2-260C-1 YEAR	-40 to 125	TL022
TLIN2022DMTTQ1.A	Active	Production	VSON (DMT) | 14	250 | SMALL T&R	Yes	NIPDAU	Level-2-260C-1 YEAR	-40 to 125	TL022
TLIN2022DRQ1	Active	Production	SOIC (D) | 14	2500 | LARGE T&R	Yes	NIPDAU | NIPDAUAG	Level-1-260C-UNLIM	-40 to 125	TL022
TLIN2022DRQ1.A	Active	Production	SOIC (D) | 14	2500 | LARGE T&R	Yes	NIPDAU	Level-1-260C-UNLIM	-40 to 125	TL022

(1) **Status:** For more details on status, see our product life cycle.

(2) **Material type:** When designated, preproduction parts are prototypes/experimental devices, and are not yet approved or released for full production. Testing and final process, including without limitation quality assurance, reliability performance testing, and/or process qualification, may not yet be complete, and this item is subject to further changes or possible discontinuation. If available for ordering, purchases will be subject to an additional waiver at checkout, and are intended for early internal evaluation purposes only. These items are sold without warranties of any kind.

(3) **RoHS values:** Yes, No, RoHS Exempt. See the TI RoHS Statement for additional information and value definition.

(4) **Lead finish/Ball material:** Parts may have multiple material finish options. Finish options are separated by a vertical ruled line. Lead finish/Ball material values may wrap to two lines if the finish value exceeds the maximum column width.

(5) **MSL rating/Peak reflow:** The moisture sensitivity level ratings and peak solder (reflow) temperatures. In the event that a part has multiple moisture sensitivity ratings, only the lowest level per JEDEC standards is shown. Refer to the shipping label for the actual reflow temperature that will be used to mount the part to the printed circuit board.

(6) **Part marking:** There may be an additional marking, which relates to the logo, the lot trace code information, or the environmental category of the part.

Multiple part markings will be inside parentheses. Only one part marking contained in parentheses and separated by a "~" will appear on a part. If a line is indented then it is a continuation of the previous line and the two combined represent the entire part marking for that device.

Important Information and Disclaimer: The information provided on this page represents TI's knowledge and belief as of the date that it is provided. TI bases its knowledge and belief on information provided by third parties, and makes no representation or warranty as to the accuracy of such information. Efforts are underway to better integrate information from third parties. TI has taken and continues to take reasonable steps to provide representative and accurate information but may not have conducted destructive testing or chemical analysis on incoming materials and chemicals. TI and TI suppliers consider certain information to be proprietary, and thus CAS numbers and other limited information may not be available for release.

In no event shall TI's liability arising out of such information exceed the total purchase price of the TI part(s) at issue in this document sold by TI to Customer on an annual basis.

TAPE AND REEL INFORMATION

REEL DIMENSIONS

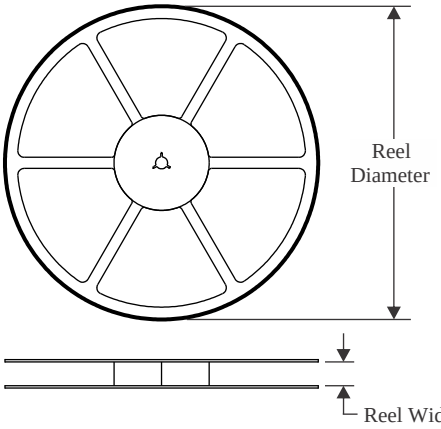

TAPE DIMENSIONS

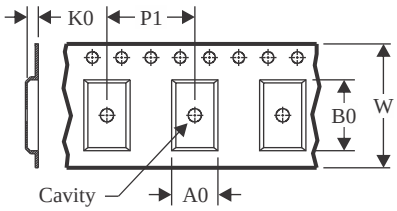

A0	Dimension designed to accommodate the component width
B0	Dimension designed to accommodate the component length
K0	Dimension designed to accommodate the component thickness
W	Overall width of the carrier tape
P1	Pitch between successive cavity centers

QUADRANT ASSIGNMENTS FOR PIN 1 ORIENTATION IN TAPE

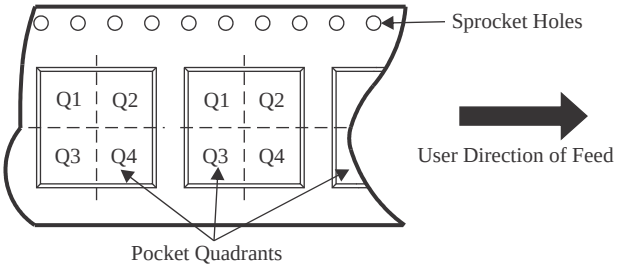

*All dimensions are nominal

Device	Package Type	Package Drawing	Pins	SPQ	Reel Diameter (mm)	Reel Width W1 (mm)	A0 (mm)	B0 (mm)	K0 (mm)	P1 (mm)	W (mm)	Pin1 Quadrant
TLIN2022DMTRQ1	VSON	DMT	14	3000	330.0	12.4	3.3	4.8	1.2	8.0	12.0	Q1
TLIN2022DMTTQ1	VSON	DMT	14	250	180.0	12.4	3.3	4.8	1.2	8.0	12.0	Q1
TLIN2022DRQ1	SOIC	D	14	2500	330.0	16.4	6.5	9.5	2.1	8.0	16.0	Q1
TLIN2022DRQ1	SOIC	D	14	2500	330.0	16.4	6.5	9.0	2.1	8.0	16.0	Q1

TAPE AND REEL BOX DIMENSIONS

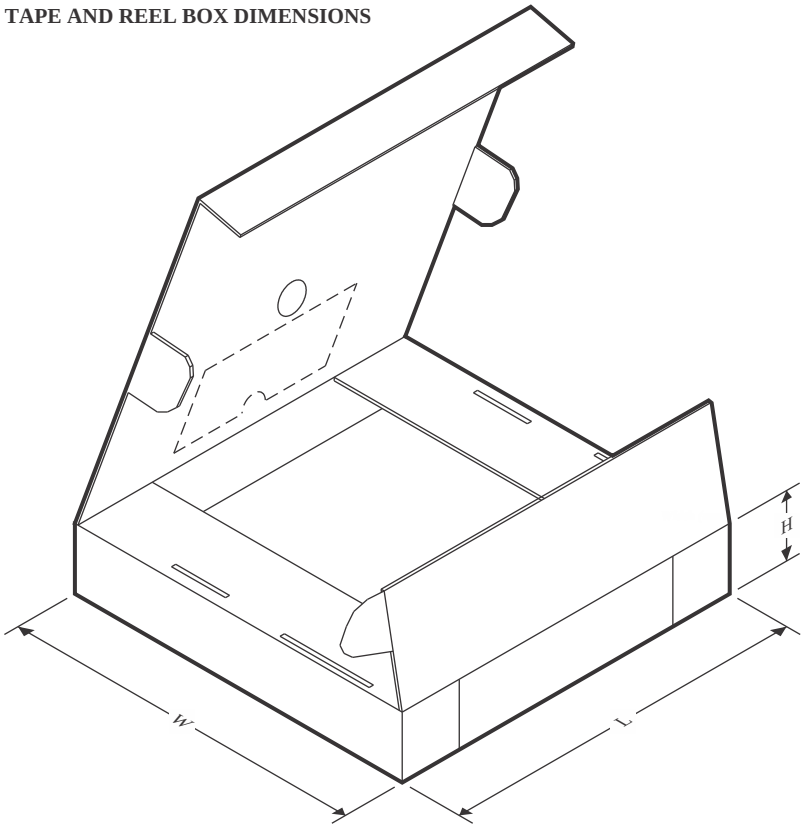

*All dimensions are nominal

Device	Package Type	Package Drawing	Pins	SPQ	Length (mm)	Width (mm)	Height (mm)
TLIN2022DMTRQ1	VSON	DMT	14	3000	367.0	367.0	35.0
TLIN2022DMTTQ1	VSON	DMT	14	250	210.0	185.0	35.0
TLIN2022DRQ1	SOIC	D	14	2500	366.0	364.0	50.0
TLIN2022DRQ1	SOIC	D	14	2500	353.0	353.0	32.0

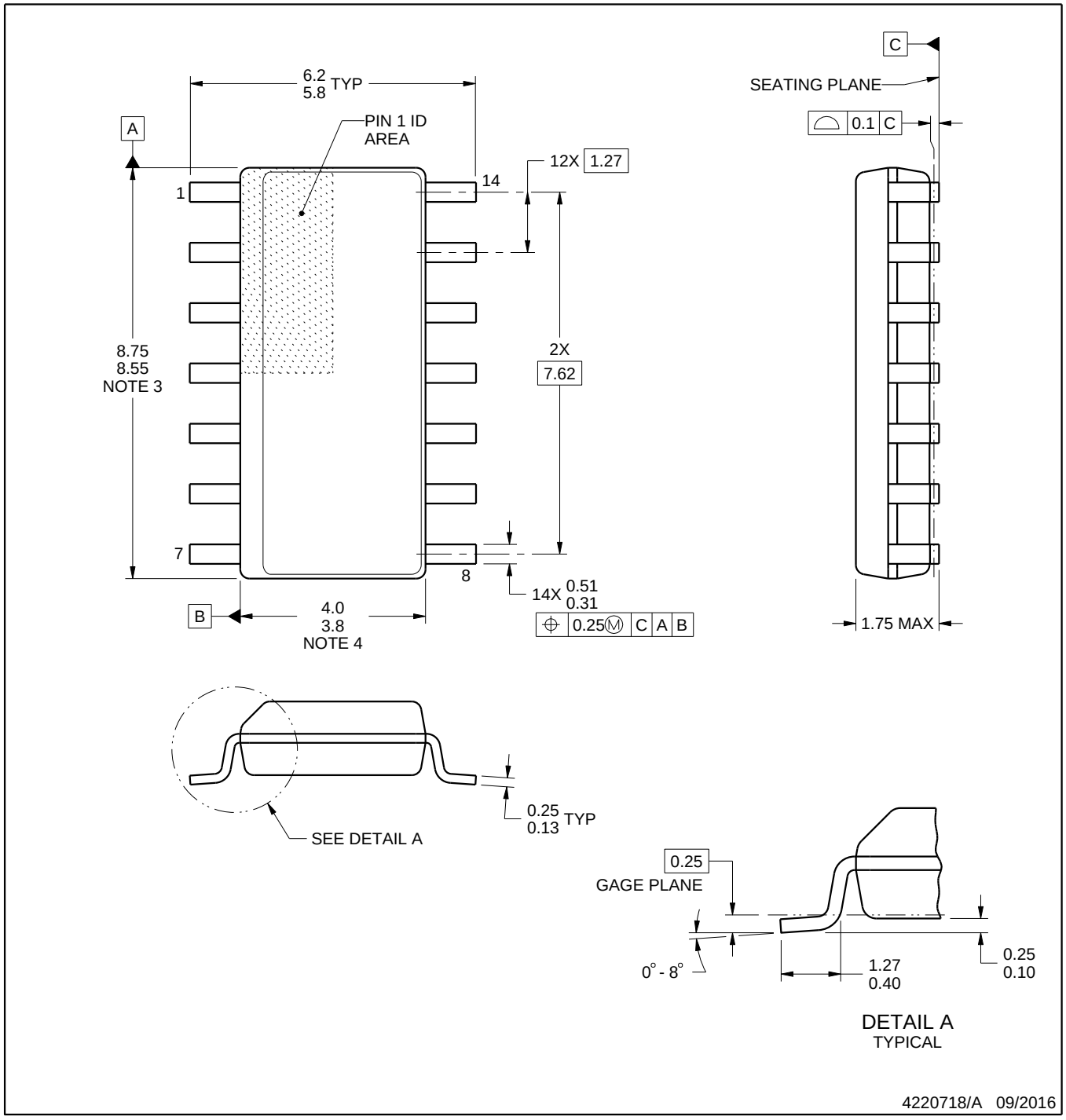

NOTES:

1. All linear dimensions are in millimeters. Dimensions in parenthesis are for reference only. Dimensioning and tolerancing per ASME Y14.5M.
2. This drawing is subject to change without notice.
3. This dimension does not include mold flash, protrusions, or gate burrs. Mold flash, protrusions, or gate burrs shall not exceed 0.15 mm, per side.
4. This dimension does not include interlead flash. Interlead flash shall not exceed 0.43 mm, per side.
5. Reference JEDEC registration MS-012, variation AB.

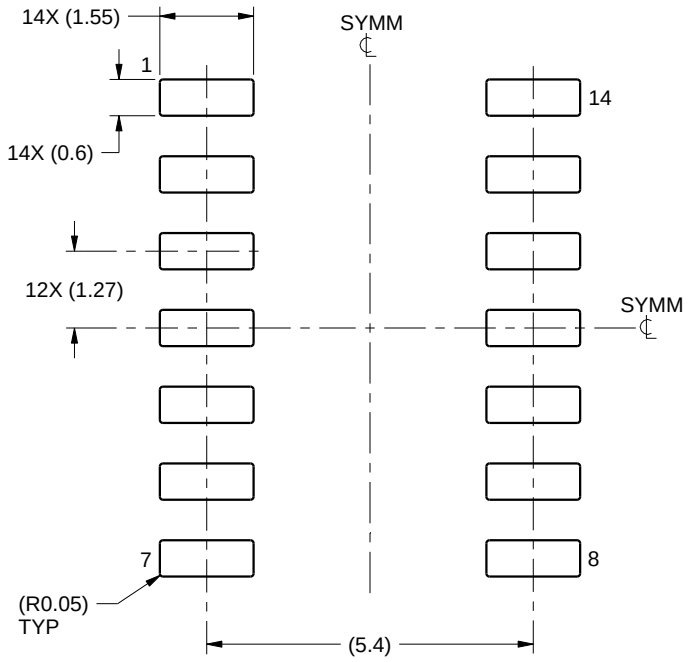

LAND PATTERN EXAMPLE
SCALE:8X

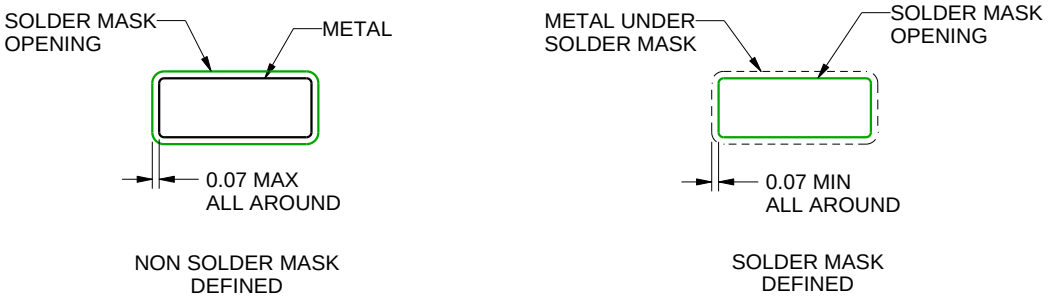

SOLDER MASK DETAILS

4220718/A 09/2016

NOTES: (continued)

6. Publication IPC-7351 may have alternate designs.
7. Solder mask tolerances between and around signal pads can vary based on board fabrication site.

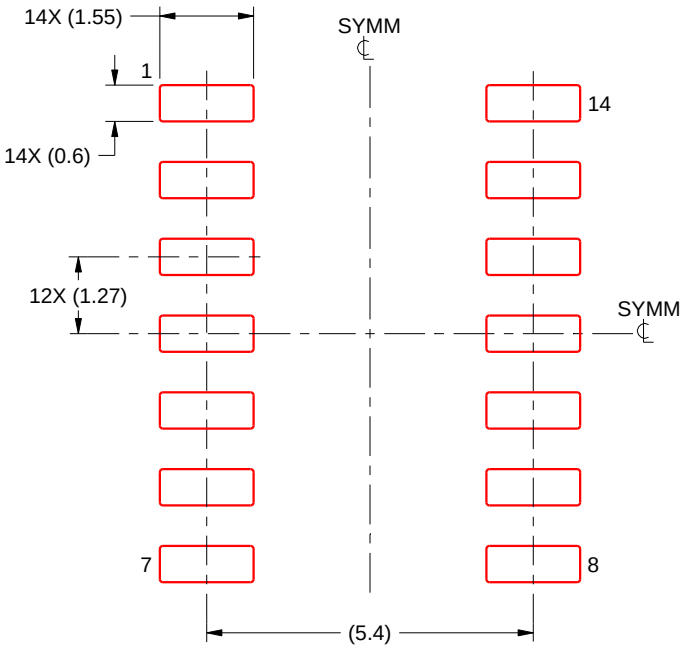

SOLDER PASTE EXAMPLE
BASED ON 0.125 mm THICK STENCIL
SCALE:8X

4220718/A 09/2016

NOTES: (continued)

8. Laser cutting apertures with trapezoidal walls and rounded corners may offer better paste release. IPC-7525 may have alternate design recommendations.
9. Board assembly site may have different recommendations for stencil design.

GENERIC PACKAGE VIEW

DMT 14

VSON - 0.9 mm max height

3 x 4.5, 0.65 mm pitch

PLASTIC SMALL OUTLINE - NO LEAD

This image is a representation of the package family, actual package may vary.
Refer to the product data sheet for package details.

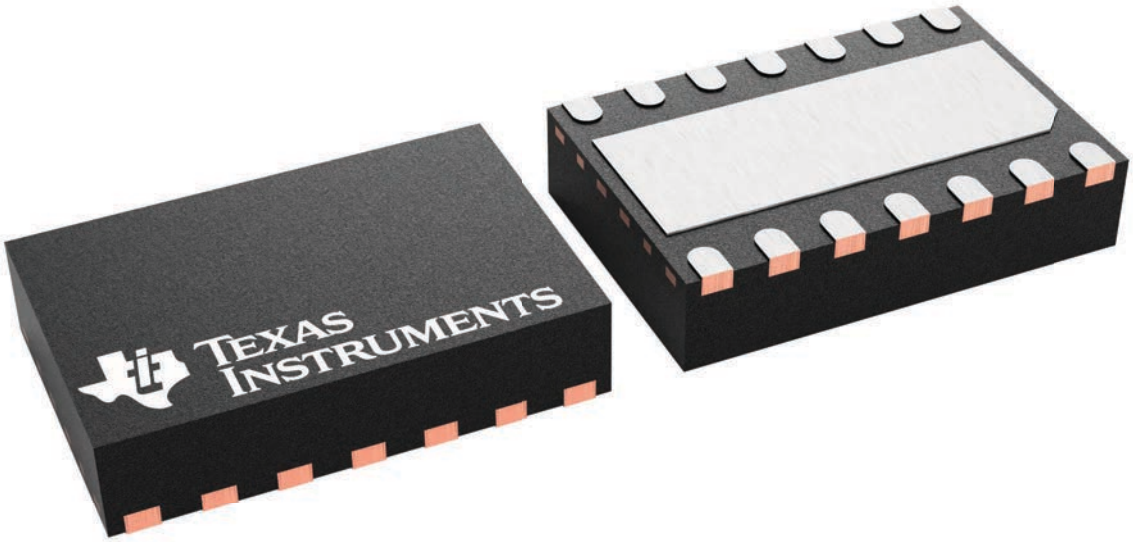

4225088/A

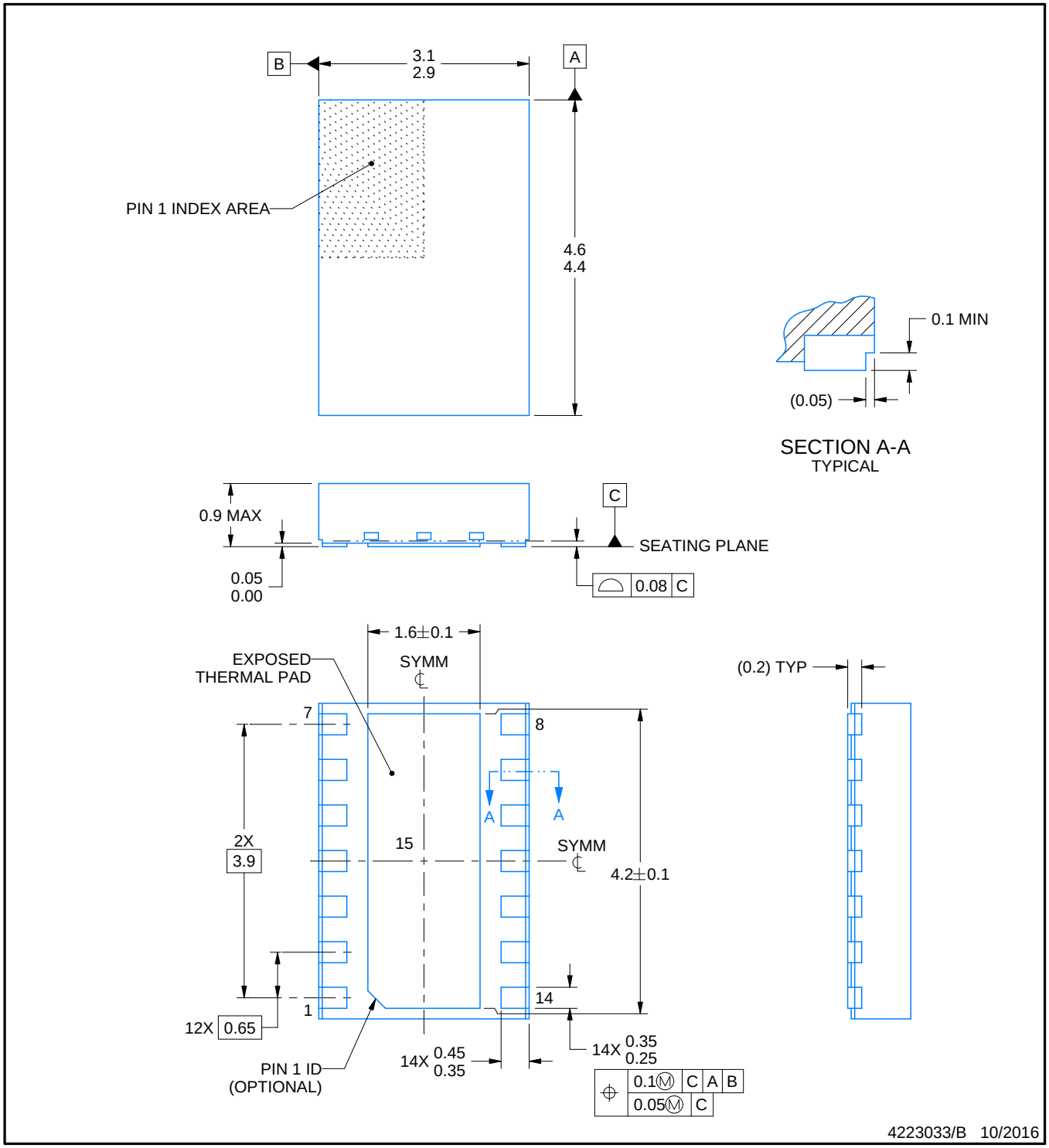

NOTES:

1. All linear dimensions are in millimeters. Any dimensions in parenthesis are for reference only. Dimensioning and tolerancing per ASME Y14.5M.
2. This drawing is subject to change without notice.
3. The package thermal pad must be soldered to the printed circuit board for thermal and mechanical performance.

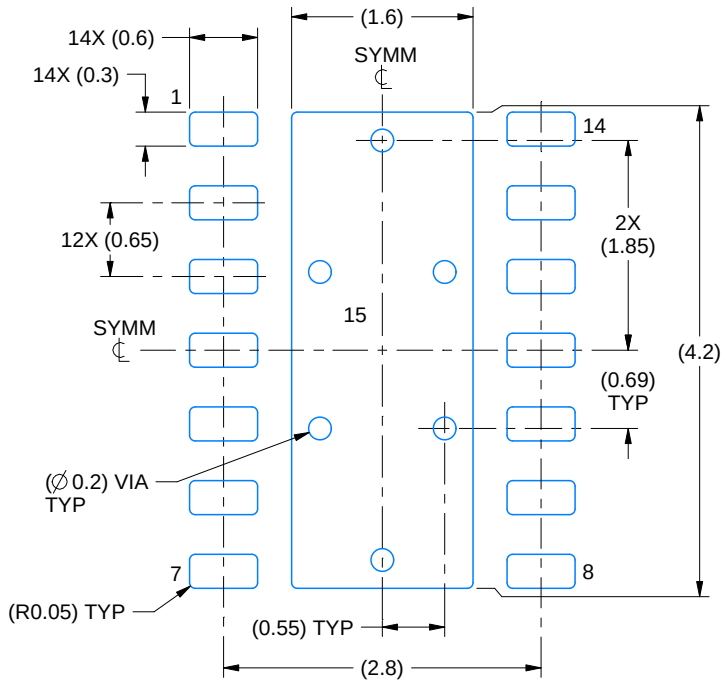

LAND PATTERN EXAMPLE
SCALE:15X

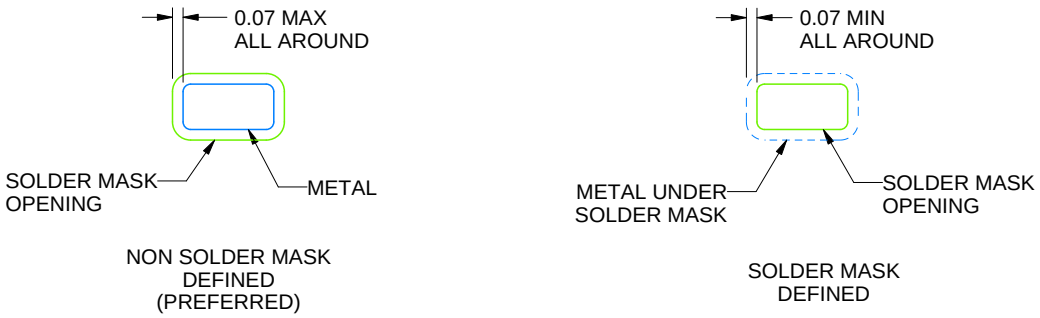

SOLDER MASK DETAILS

4223033/B 10/2016

NOTES: (continued)

4. This package is designed to be soldered to a thermal pad on the board. For more information, see Texas Instruments literature number SLUA271 (www.ti.com/lit/slua271).
5. Vias are optional depending on application, refer to device data sheet. If any vias are implemented, refer to their locations shown on this view. It is recommended that vias under paste be filled, plugged or tented.

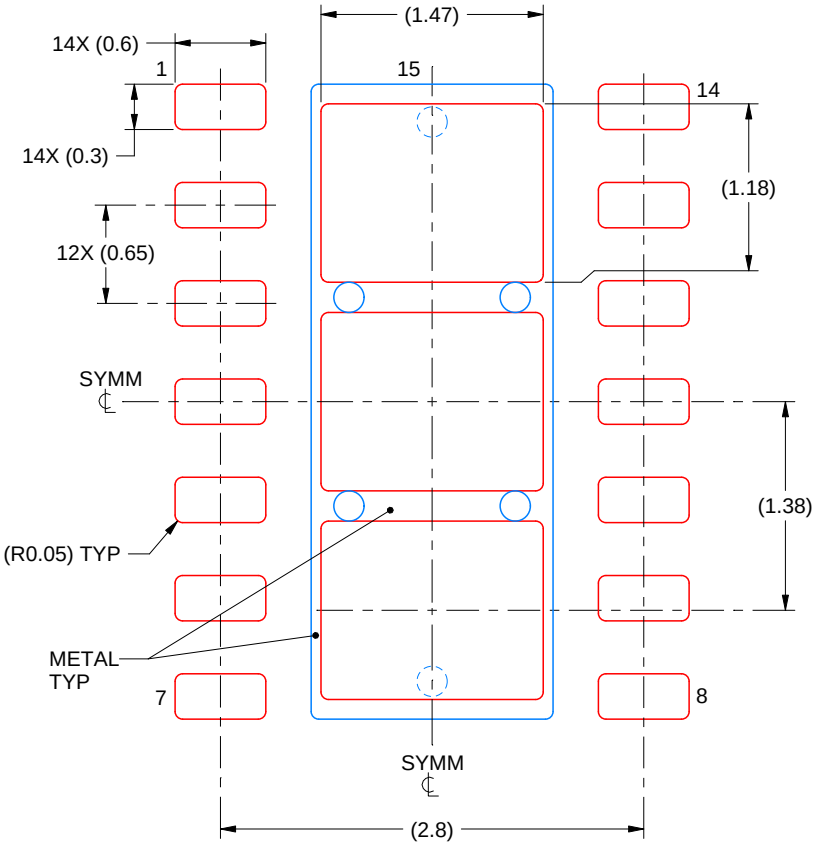

SOLDER PASTE EXAMPLE
BASED ON 0.125 mm THICK STENCIL

EXPOSED PAD 15
77.4% PRINTED SOLDER COVERAGE BY AREA
SCALE:20X

4223033/B 10/2016

NOTES: (continued)

6. Laser cutting apertures with trapezoidal walls and rounded corners may offer better paste release. IPC-7525 may have alternate design recommendations.

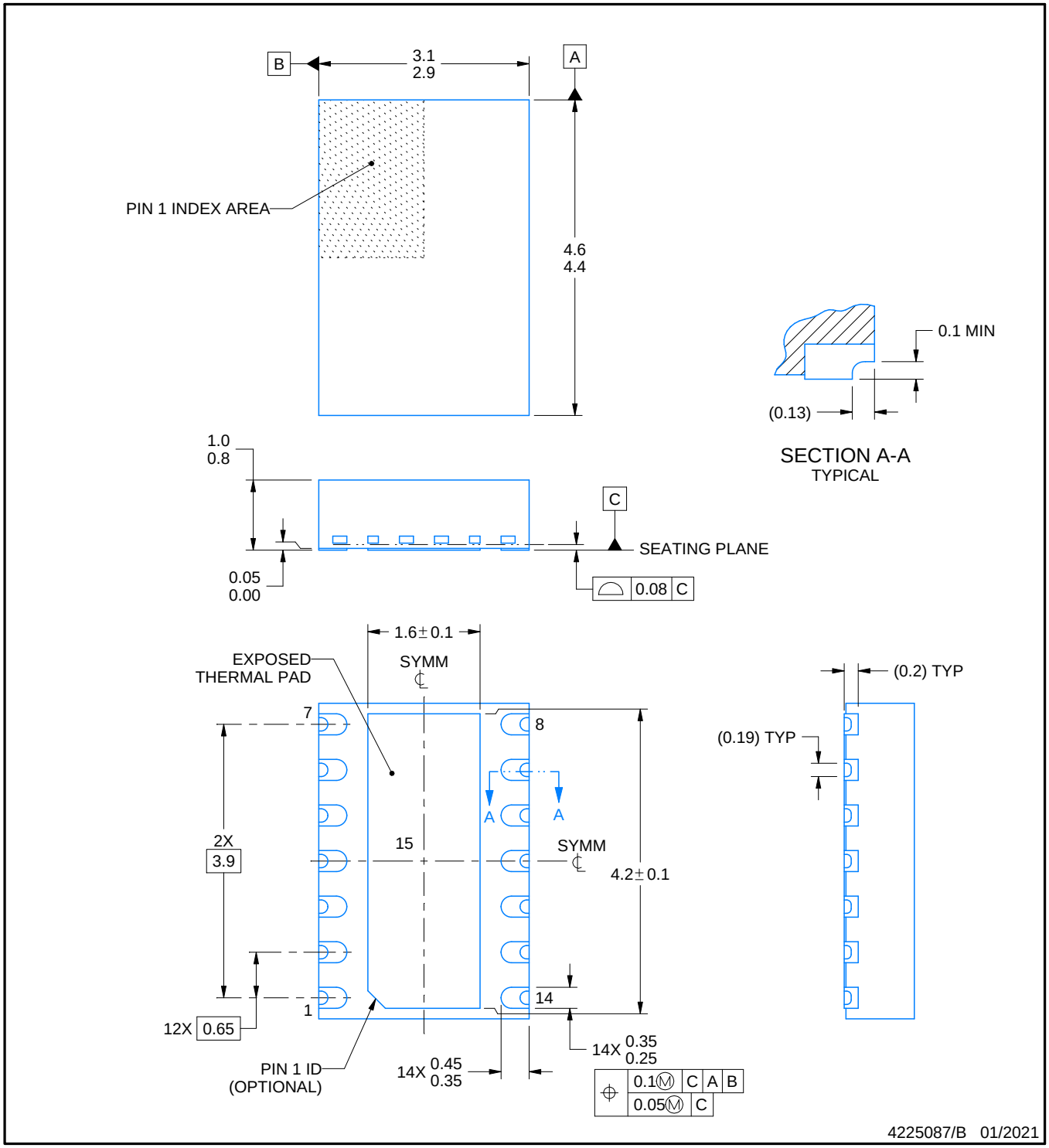

NOTES:

1. All linear dimensions are in millimeters. Any dimensions in parenthesis are for reference only. Dimensioning and tolerancing per ASME Y14.5M.
2. This drawing is subject to change without notice.
3. The package thermal pad must be soldered to the printed circuit board for thermal and mechanical performance.

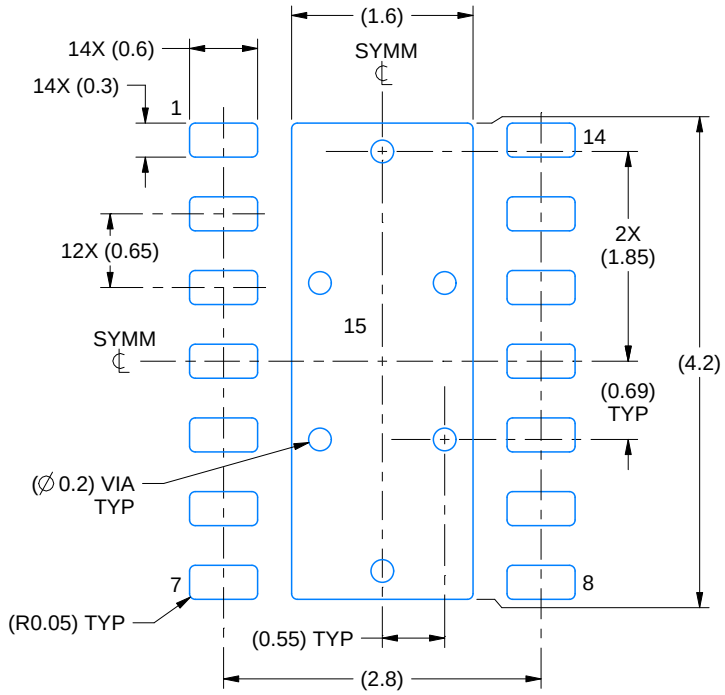

LAND PATTERN EXAMPLE
EXPOSED METAL SHOWN
SCALE:15X

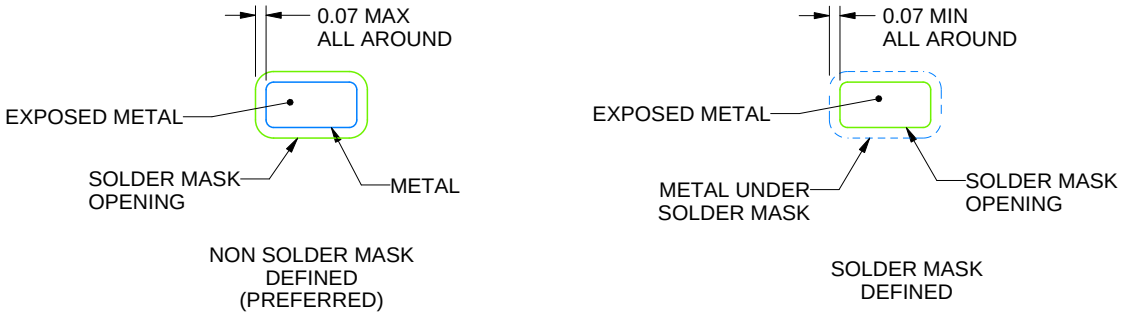

SOLDER MASK DETAILS

4225087/B 01/2021

NOTES: (continued)

4. This package is designed to be soldered to a thermal pad on the board. For more information, see Texas Instruments literature number SLUA271 (www.ti.com/lit/slua271).
5. Vias are optional depending on application, refer to device data sheet. If any vias are implemented, refer to their locations shown on this view. It is recommended that vias under paste be filled, plugged or tented.

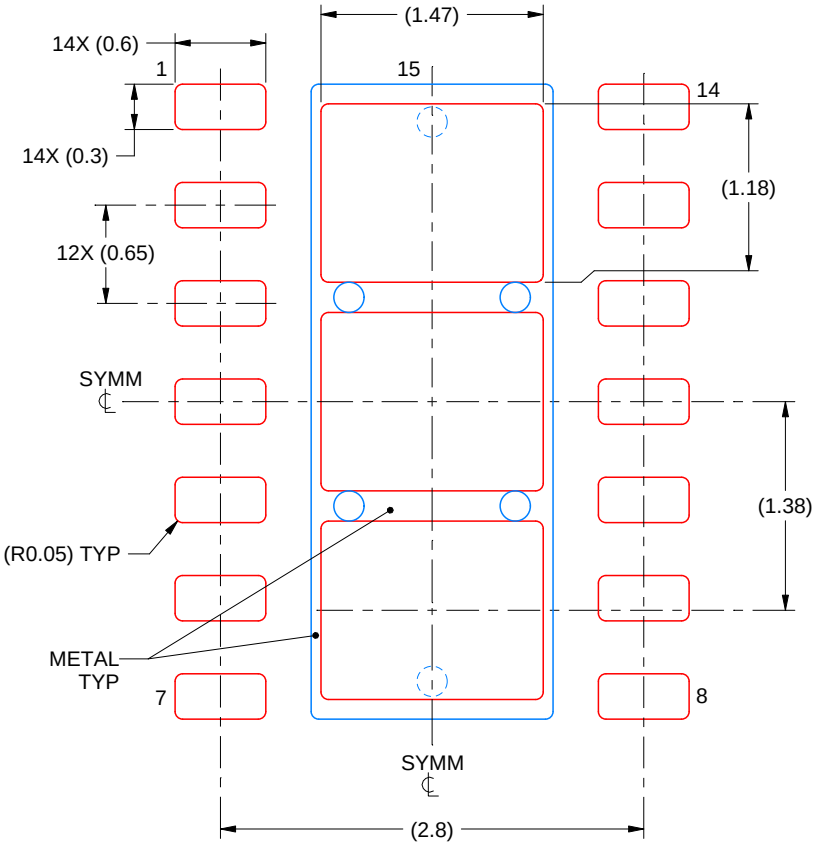

SOLDER PASTE EXAMPLE
BASED ON 0.125 mm THICK STENCIL

EXPOSED PAD 15
77.4% PRINTED SOLDER COVERAGE BY AREA
SCALE:20X

4225087/B 01/2021

NOTES: (continued)

6. Laser cutting apertures with trapezoidal walls and rounded corners may offer better paste release. IPC-7525 may have alternate design recommendations.

IMPORTANT NOTICE AND DISCLAIMER

TI PROVIDES TECHNICAL AND RELIABILITY DATA (INCLUDING DATA SHEETS), DESIGN RESOURCES (INCLUDING REFERENCE DESIGNS), APPLICATION OR OTHER DESIGN ADVICE, WEB TOOLS, SAFETY INFORMATION, AND OTHER RESOURCES “AS IS” AND WITH ALL FAULTS, AND DISCLAIMS ALL WARRANTIES, EXPRESS AND IMPLIED, INCLUDING WITHOUT LIMITATION ANY IMPLIED WARRANTIES OF MERCHANTABILITY, FITNESS FOR A PARTICULAR PURPOSE OR NON-INFRINGEMENT OF THIRD PARTY INTELLECTUAL PROPERTY RIGHTS.

These resources are intended for skilled developers designing with TI products. You are solely responsible for (1) selecting the appropriate TI products for your application, (2) designing, validating and testing your application, and (3) ensuring your application meets applicable standards, and any other safety, security, regulatory or other requirements.

These resources are subject to change without notice. TI grants you permission to use these resources only for development of an application that uses the TI products described in the resource. Other reproduction and display of these resources is prohibited. No license is granted to any other TI intellectual property right or to any third party intellectual property right. TI disclaims responsibility for, and you will fully indemnify TI and its representatives against, any claims, damages, costs, losses, and liabilities arising out of your use of these resources.

TI’s products are provided subject to TI’s Terms of Sale or other applicable terms available either on ti.com or provided in conjunction with such TI products. TI’s provision of these resources does not expand or otherwise alter TI’s applicable warranties or warranty disclaimers for TI products.

TI objects to and rejects any additional or different terms you may have proposed.

Mailing Address: Texas Instruments, Post Office Box 655303, Dallas, Texas 75265
Copyright © 2025, Texas Instruments Incorporated