TPS54719 2.95-V To 6-V Input, 7-A Synchronous Step Down Converter

1 Features

- Two 30-mΩ (typical) MOSFETs for high efficiency at 7-A loads
- 200-kHz to 2-MHz switching frequency
- 0.6 V ± 1.5% voltage reference over temperature
- Adjustable slow start/sequencing
- UV and OV power-good output
- Low operating and shutdown quiescent current
- Safe start-up into pre-biased output
- Cycle-by-cycle current limit, thermal and frequency foldback protection
- –40°C to 140°C operating junction temperature range
- Thermally enhanced 3-mm × 3-mm 16-pin QFN

2 Applications

- Low-voltage, high-density power systems
- Point-of-load regulation for high performance DSPs, FPGAs, ASICs, and microprocessors
- Broadband, networking, and optical communications infrastructure

3 Description

The TPS54719 device is a full featured 6-V, 7-A, synchronous step down current mode converter with two integrated MOSFETs.

The TPS54719 enables small designs by integrating the MOSFETs, implementing current mode control to reduce external component count, reducing inductor size by enabling up to 2-MHz switching frequency, and minimizing the IC footprint with a small 3-mm × 3-mm thermally enhanced QFN package.

The TPS54719 provides accurate regulation for a variety of loads with an accurate ±1.5% Voltage Reference (VREF) over temperature.

Efficiency is maximized through the integrated 30-mΩ MOSFETs and 455-µA typical supply current. Using the enable pin, shutdown supply current is reduced to 1 µA by entering a shutdown mode.

Undervoltage lockout is internally set at 2.4 V, but can be increased by programming the threshold with a resistor network on the enable pin. The output voltage start-up ramp is controlled by the slow-start pin. An open-drain power-good signal indicates the output is within 93% to 108% of its nominal voltage.

Frequency foldback and thermal shutdown protects the device during an overcurrent condition.

The TPS54719 is supported in the WEBENCH™ Software Tool at www.ti.com/webench.

Device Information

PART NUMBER	PACKAGE(1)	BODY SIZE (NOM)
TPS54719	QFN (16)	3.00 mm × 3.00 mm

(1) For all available packages, see the orderable addendum at the end of the datasheet.

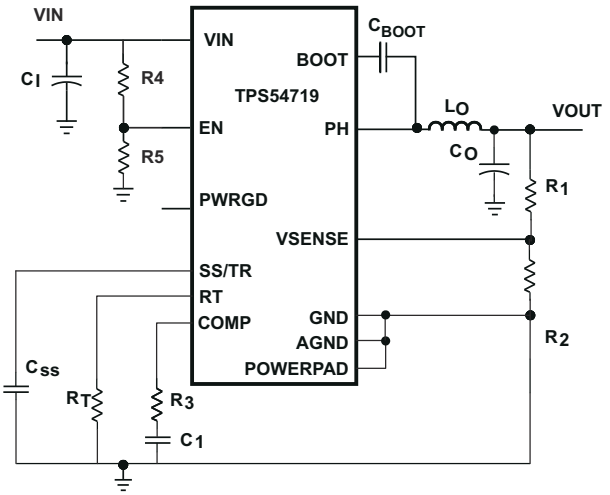

Simplified Schematic

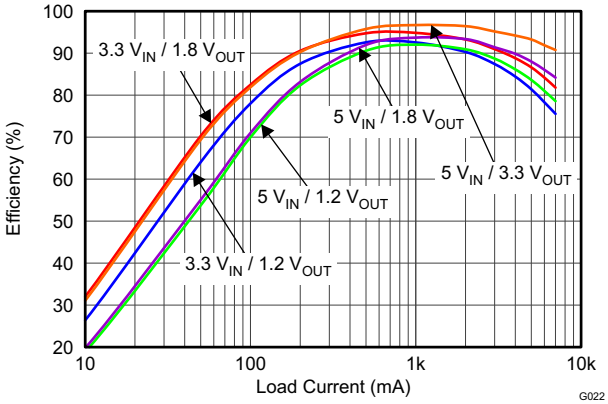

Efficiency Versus Output Current

An IMPORTANT NOTICE at the end of this data sheet addresses availability, warranty, changes, use in safety-critical applications, intellectual property matters and other important disclaimers. PRODUCTION DATA.

Table of Contents

1 Features....1
2 Applications....1
3 Description....1
4 Revision History....2
5 Pin Configuration and Functions....3
6 Specifications....4
6.1 Absolute Maximum Ratings....4
6.2 ESD Ratings....4
6.3 Recommended Operating Conditions....4
6.4 Thermal Information....5
6.5 Electrical Characteristics....5
6.6 Timing Requirements....6
6.7 Typical Characteristics....7
7 Detailed Description....11
7.1 Overview....11
7.2 Functional Block Diagram....12
7.3 Feature Description....12
7.4 Device Functional Modes....16
8 Application and Implementation....21
8.1 Application Information....21
8.2 Typical Application....21
9 Power Supply Recommendations....30
10 Layout....30
10.1 Layout Guidelines....30
10.2 Layout Example....31
11 Device and Documentation Support....34
11.1 Receiving Notification of Documentation Updates....34
11.2 Support Resources....34
11.3 Trademarks....34
11.4 Electrostatic Discharge Caution....34
11.5 Glossary....34
12 Mechanical, Packaging, and Orderable Information....34

4 Revision History

Changes from Revision B (February 2016) to Revision C (September 2021)	Page
• Updated the numbering format for tables, figures, and cross-references throughout the document.	1
• Added I/O column to Table 5-1	3

Changes from Revision A (July 2014) to Revision B (February 2016)	Page
• Deleted SWIFT™ from the data sheet title	1
• Moved Storage temperature to the *Section 6.1*	4
• Changed *Handling Ratings* to *Section 6.2*	4

Copyright © 2022 Texas Instruments Incorporated

5 Pin Configuration and Functions

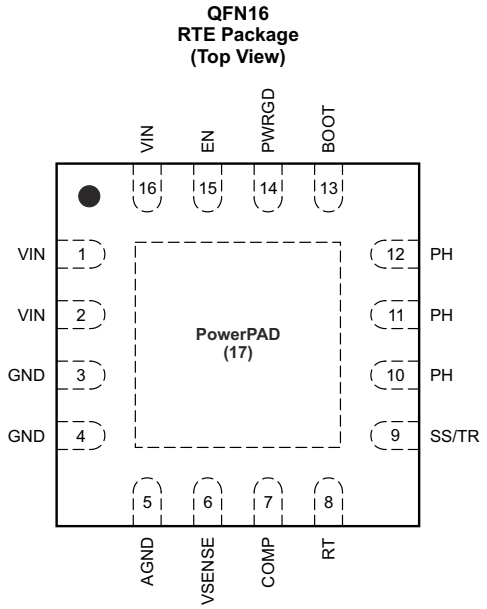

Figure 5-1. 16-Pin RTE QFN Package (Top View)

Table 5-1. Pin Functions

PIN		I/O	DESCRIPTION
NAME	NO.		
AGND	5		Analog Ground should be electrically connected to GND close to the device.
BOOT	13	I	A bootstrap capacitor is required between BOOT and PH. If the voltage on this capacitor is below the minimum required by the BOOT UVLO, the output is forced to switch off until the capacitor is refreshed.
COMP	7	O	Error amplifier output and input to the output switch current comparator. Connect frequency compensation components to this pin.
EN	15	I	Enable pin, internal pullup current source. Pull below 1.18 V to disable. Float to enable. Can be used to set the on/off threshold (adjust UVLO) with two additional resistors.
GND	3, 4		Power Ground. This pin should be electrically connected directly to the power pad under the IC.
PH	10, 11, 12	O	The source of the internal high-side power MOSFET and drain of the internal low-side (synchronous) rectifier MOSFET.
PWRGD	14	O	An open-drain output. Asserts low if output voltage is low due to thermal shutdown, overcurrent, overvoltage/undervoltage, or EN shut down.
RT	8	I	Resistor timing
SS/TR	9	I/O	Slow start. An external capacitor connected to this pin sets the output voltage rise time. This pin can also be used for tracking.
Thermal Pad	17		GND pin should be connected to the exposed power pad for proper operation. This thermal pad should be connected to any internal PCB ground plane using multiple vias for good thermal performance.
VIN	1, 2, 16	I	Input supply voltage: 2.95 V to 6 V
VSENSE	6	I	Inverting node of the transconductance (gm) error amplifier

Copyright © 2022 Texas Instruments Incorporated

6 Specifications

6.1 Absolute Maximum Ratings

over operating free-air temperature range (unless otherwise noted) [1]

		MIN	MAX	UNIT
Input voltage	VIN	–0.3	7	V
	EN	–0.3	7	
	BOOT		PH + 8	
	VSENSE	–0.3	3	
	COMP	–0.3	3	
	PWRGD	–0.3	7	
	SS/TR	–0.3	3	
	RT	–0.3	6	
Output voltage	BOOT-PH		8	V
	PH	–0.6	7	
	PH 10 ns Transient	–2	7	
Source current	EN		100	µA
	RT		100	
Sink current	COMP		100	µA
	PWRGD		10	mA
	SS/TR		100	µA
Operating Junction temperature, T_j		–40	140	°C
Storage temperature, T_{stg}		–65	150	°C

(1) Stresses beyond those listed under *Absolute Maximum Ratings* may cause permanent damage to the device. These are stress ratings only, which do not imply functional operation of the device at these or any other conditions beyond those indicated under *Recommended Operating Conditions*. Exposure to absolute-maximum-rated conditions for extended periods may affect device reliability.

6.2 ESD Ratings

			VALUE	UNIT
$V_{(ESD)}$	Electrostatic discharge	Human body model (HBM), per ANSI/ESDA/JEDEC JS-001, all pins[1]	±2000	V
		Charged device model (CDM), per JEDEC specification JESD22-C101, all pins[2]	±500	

(1) JEDEC document JEP155 states that 500-V HBM allows safe manufacturing with a standard ESD control process.
(2) JEDEC document JEP157 states that 250-V CDM allows safe manufacturing with a standard ESD control process.

6.3 Recommended Operating Conditions

over operating free-air temperature range (unless otherwise noted)

		MIN	NOM	MAX	UNIT
VIN	Supply voltage	2.95		6	V
Input voltage	EN	0		6	V
	PWRGD	0		6	
	SS/RT	0		2.7	
	RT	0		5.5	
T_A	Operating free-air temperature	–40		85	°C

Copyright © 2022 Texas Instruments Incorporated

6.4 Thermal Information

THERMAL METRIC [1]		TPS54719 RTE (16 PINS)	UNITS
$R_{\theta JA}$	Junction-to-ambient thermal resistance (standard board)	49.1	°C/W
$R_{\theta JA}$	Junction-to-ambient thermal resistance (custom board)[2]	37.0	
ψ_{JT}	Junction-to-top characterization parameter	0.7	
ψ_{JB}	Junction-to-board characterization parameter	21.8	
$R_{\theta JC(top)}$	Junction-to-case(top) thermal resistance	50.7	
$R_{\theta JC(bot)}$	Junction-to-case(bottom) thermal resistance	7.5	
$R_{\theta JB}$	Junction-to-board thermal resistance	21.8	

(1) Power rating at a specific ambient temperature T_A should be determined with a junction temperature of 140°C. This is the point where distortion starts to substantially increase. See power dissipation estimate in the application section of this data sheet for more information.

(2) Test boards conditions:
- a. 2 inches x 2 inches, 4 layers, thickness: 0.062 inch
- b. 2 oz. copper traces located on the top of the PCB
- c. 2 oz. copper ground planes on the 2 internal layers and bottom layer
- d. 4 thermal vias (10mil) located under the device package

6.5 Electrical Characteristics

T_J = –40°C to 140°C, V_{IN} = 2.95 to 6 V (unless otherwise noted)

DESCRIPTION	CONDITIONS	MIN	TYP	MAX	UNIT
SUPPLY VOLTAGE (VIN PIN)					
Operating input voltage		2.95		6	V
Internal undervoltage lockout threshold	Rising V_{IN}		2.4	2.8	V
Internal UVLO hysteresis			0.2		V
Shutdown supply current	EN = 0 V, 2.95 V ≤ VIN ≤ 6 V		1	5	µA
Quiescent current – I_q	V_{SENSE} = 620 mV, RT = 84 kΩ		455	550	µA
ENABLE AND UVLO (EN PIN)					
Enable threshold	Rising	1.16	1.25	1.37	V
	Falling		1.18		
Input current	Enable threshold + 50 mV		-3.6		µA
	Enable threshold – 50 mV		-0.7		
VOLTAGE REFERENCE (VSENSE PIN)					
Voltage reference	2.95 V ≤ V_{IN} ≤ 6 V, –40°C <T_J < 140°C	0.591	0.600	0.609	V
	25°C	0.594	0.600	0.606	
MOSFET					
High-side switch resistance	BOOT-PH = 5 V; T_J = 25°C		26	60	mΩ
	BOOT-PH = 2.95 V; T_J = 25°C		35	70	
Low-side switch resistance	V_{IN} = 5 V; T_J = 25°C		26	60	mΩ
	V_{IN} = 2.95 V; T_J = 25°C		35	70	
ERROR AMPLIFIER					
Input current			50		nA
Error amplifier transconductance (gm)	–2 µA < $I_{(COMP)}$ < 2 µA, $V_{(COMP)}$ = 1 V		250		µmhos
Error amplifier transconductance (gm) during slow start	–2 µA < $I_{(COMP)}$ < 2 µA, $V_{(COMP)}$ = 0.9 V, Vsense = 0.3 V		85		µmhos
Error amplifier source/sink	$V_{(COMP)}$ = 1 V, 100 mV overdrive		±20		µA
COMP to Iswitch gm			25		A/V

Copyright © 2022 Texas Instruments Incorporated

T_J = –40°C to 140°C, V_{IN} = 2.95 to 6 V (unless otherwise noted)

DESCRIPTION	CONDITIONS	MIN	TYP	MAX	UNIT
CURRENT LIMIT					
Current limit threshold		8.5	10.5		A
Low-side reverse current limit		–1.5	–2.7		A
THERMAL SHUTDOWN					
Thermalshutdown		150	155		°C
Hysteresis			7.5		°C
TIMING RESISTOR (RT PIN)					
Switching frequency range using RT mode		200		2000	kHz
Switching frequency	RT = 84 kΩ	400	490	600	kHz
BOOT (BOOT PIN)					
BOOT charge resistance	V_{IN} = 5 V		15		Ω
BOOT-PH UVLO	V_{IN} = 2.95 V		2.1	2.75	V
SLOW START / TRACKING (SS/TR PIN)					
Charge current	$V_{(SS)}$ = 0.3 V		2.4		µA
SS/TR to VSENSE matching	V_{SSTR} = 0.3 V		73	115	mV
SS to reference crossover	98% nominal		0.87		V
SS discharge current (overload)	VSENSE = 0 V, V_{SS} = 0.3 V		70		µA
SS discharge voltage (overload)	VSENSE = 0 V		80		mV
SS discharge current (UVLO, EN, thermal fault)	VIN = 5 V, $V_{(SS)}$ = 0.5 V		1.2		mA
POWER GOOD (PWRGD PIN)					
VSENSE threshold	VSENSE rising (Good)		93		% Vref
	VSENSE rising (Fault)		110		% Vref
Hysteresis	VSENSE falling		2		% Vref
Output high leakage	VSENSE = VREF, $V_{(PWRGD)}$ = 5.5 V		100		nA
On resistance	VIN = 5 V, T_J = 25°C		78		Ω
Minimum VIN for valid output	$V_{(PWRGD)}$ < 0.5 V at 100 µA			0.8	V

6.6 Timing Requirements

DESCRIPTION	CONDITIONS	MIN	TYP	MAX	UNIT
PH (PH PIN)					
Minimum on time	Measured at 50% points on PH, VIN = 5 V, IOUT = 500 mA		100		ns
Minimum on time	Measured at 50% points on PH, VIN = 5 V, IOUT = 7 A		64		ns
Minimum off time	Prior to skipping off pulses, BOOT-PH = 2.95 V, I_{OUT} = 4 A		0		ns
Rise/fall time	V_{IN} = 5 V		1.5		V/ns
Dead time	Prior to skipping off pulses. BOOT-PH = 2.95 V, I_{OUT} = 4 A		70		ns

Copyright © 2022 Texas Instruments Incorporated

6.7 Typical Characteristics

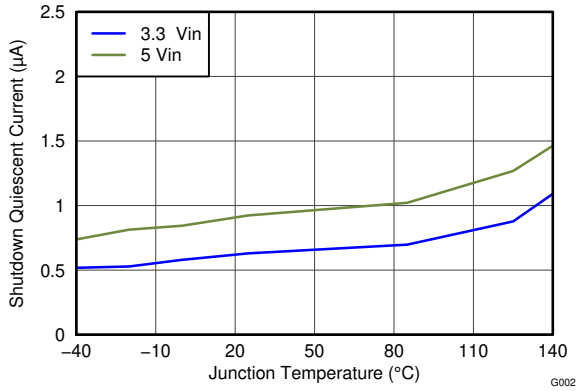

Figure 6-1. Shutdown Supply Current vs Temperature

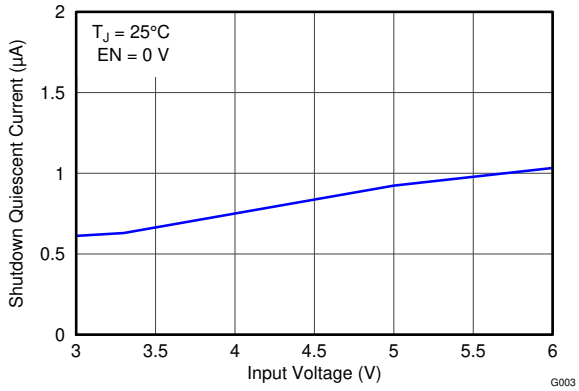

Figure 6-2. Shutdown Supply Current vs Voltage

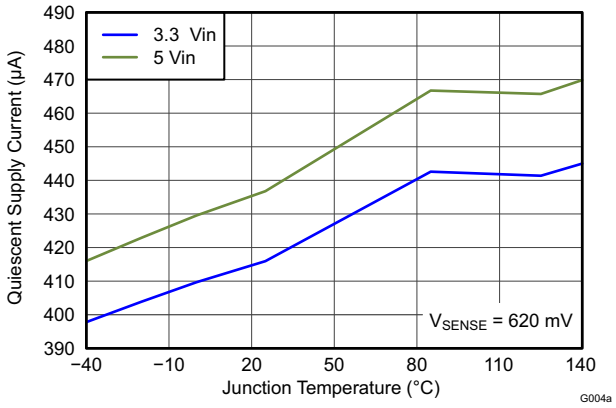

Figure 6-3. V_{IN} Supply Current vs Temperature

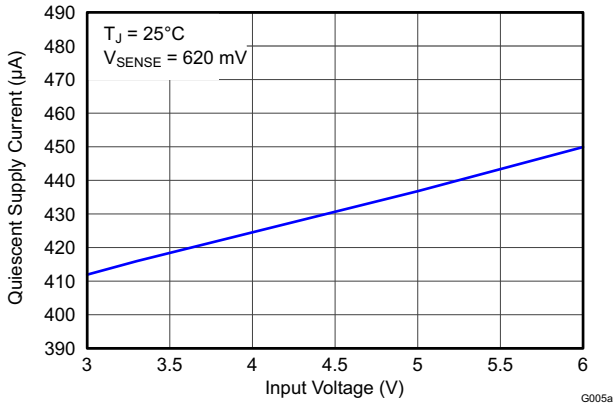

Figure 6-4. V_{IN} Supply Current vs Voltage

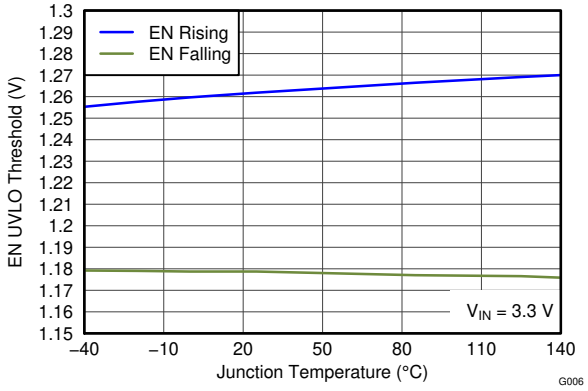

Figure 6-5. UVLO Threshold vs Temperature

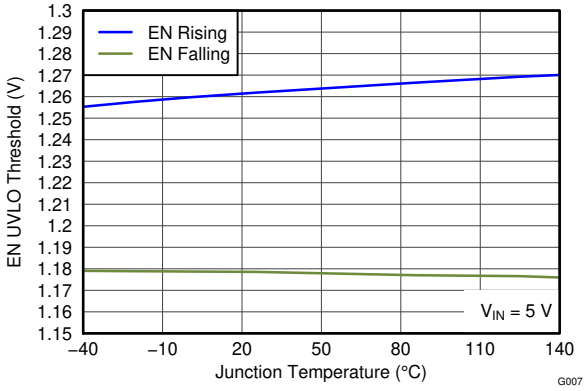

Figure 6-6. UVLO Threshold vs Temperature

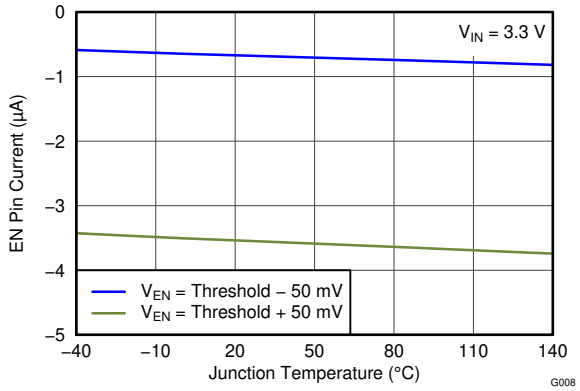

Figure 6-7. EN Pin Current vs Temperature

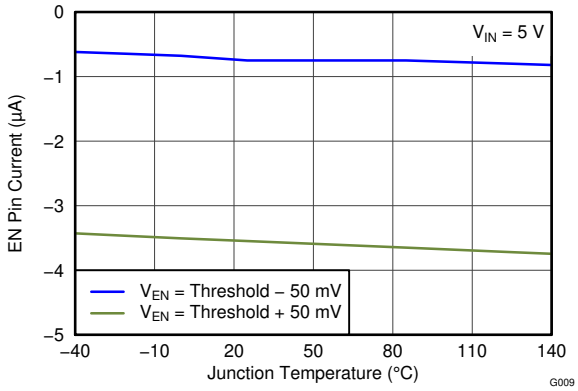

Figure 6-8. EN Pin Current vs Temperature

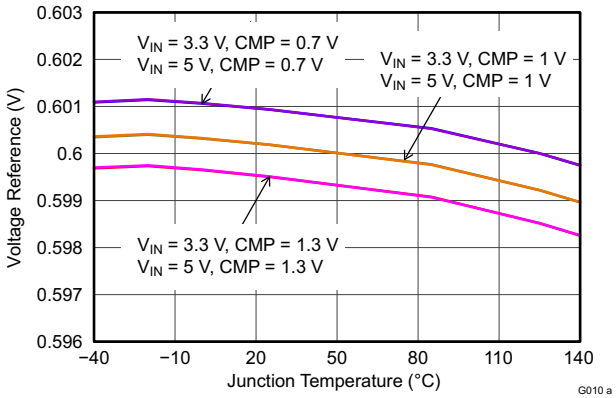

Figure 6-9. Voltage Reference vs Temperature

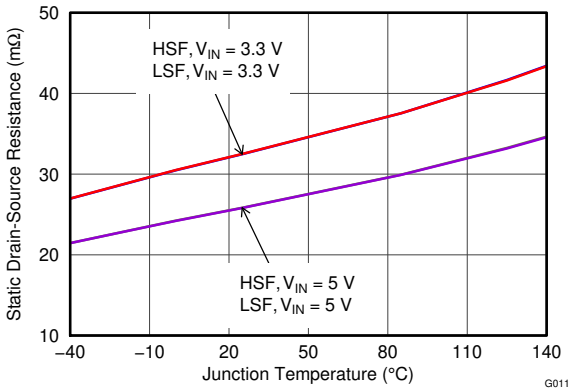

Figure 6-10. Rdson vs Temperature

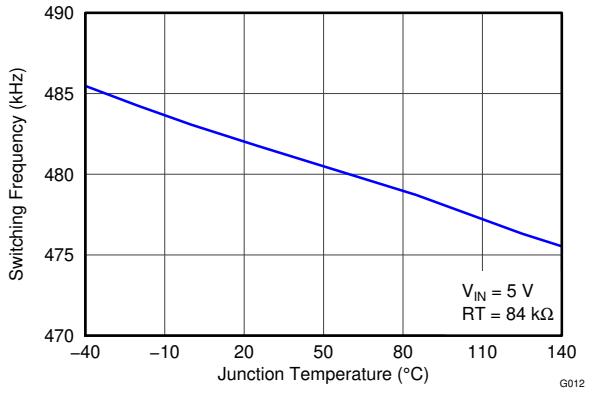

Figure 6-11. Switching Frequency vs Temperature

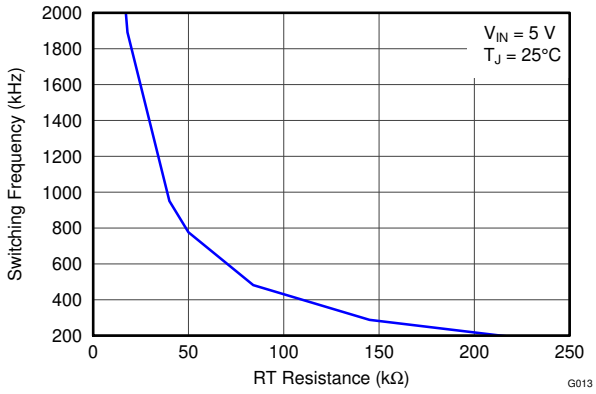

Figure 6-12. Switching Frequency vs RT Resistance

Copyright © 2022 Texas Instruments Incorporated

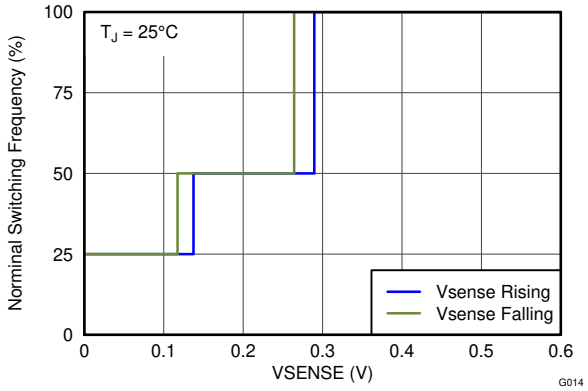

Figure 6-13. Switching Frequency vs Vsense

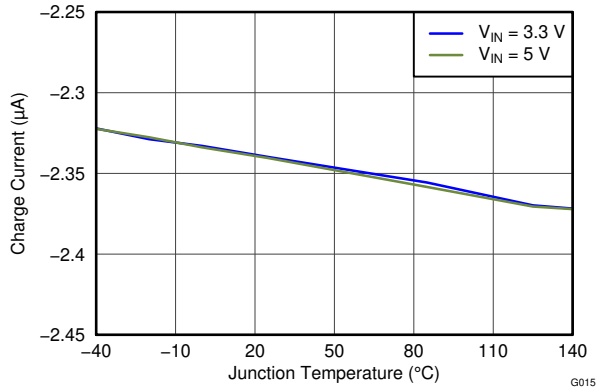

Figure 6-14. SS Charge Current vs Temperature

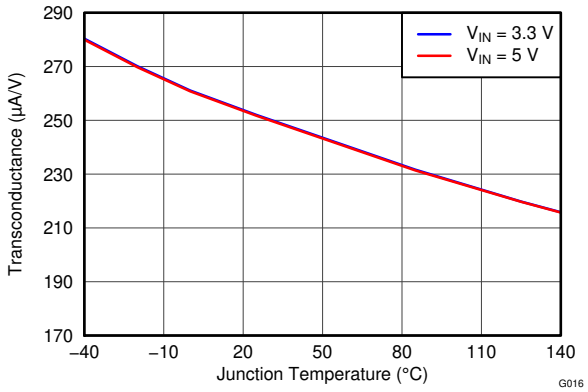

Figure 6-15. Transconductance vs Temperature

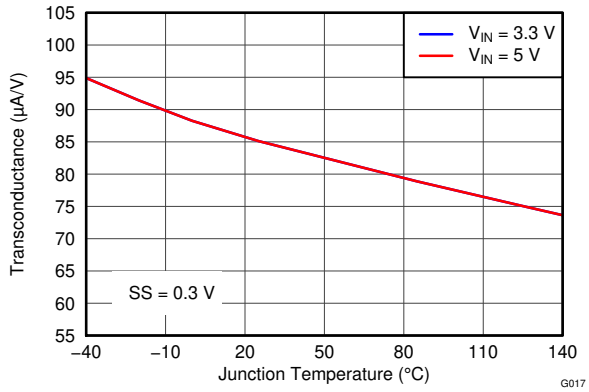

Figure 6-16. Transconductance (Slow Start) vs Temperature

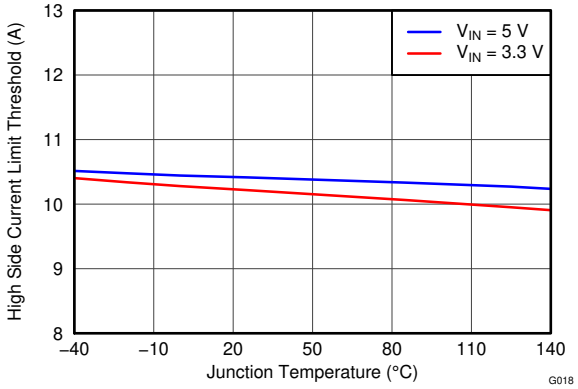

Figure 6-17. High-Side FET Current Limit vs Temperature

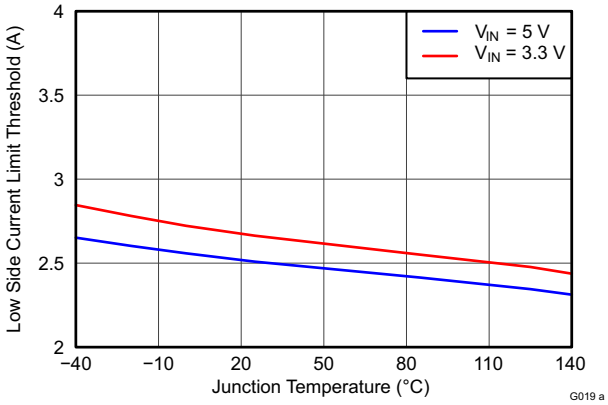

Figure 6-18. Low-Side FET Current Limit vs Temperature

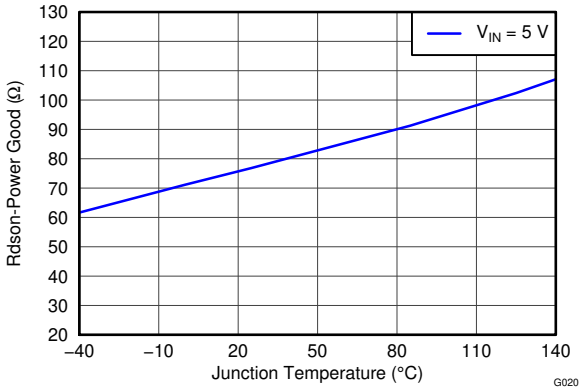

Figure 6-19. PWRGD Rdson vs Temperature

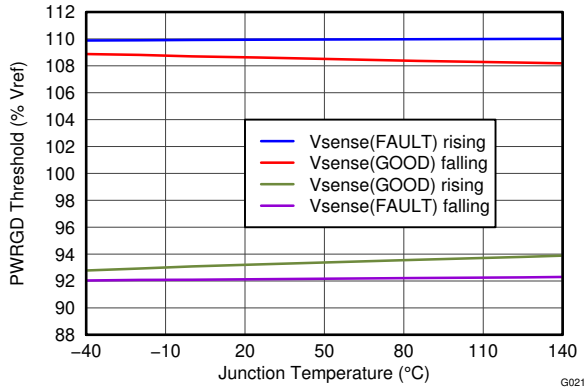

Figure 6-20. PWRGD Threshold vs Temperature

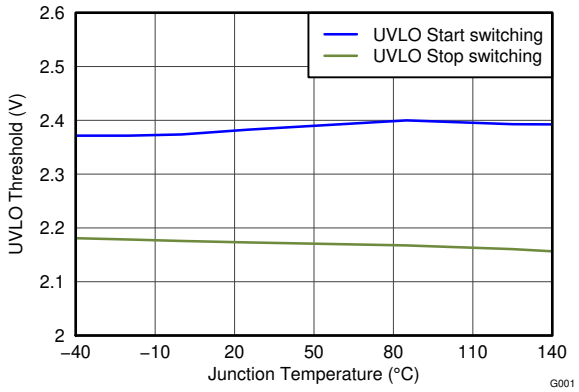

Figure 6-21. UVLO Threshold vs Temperature

Copyright © 2022 Texas Instruments Incorporated

7 Detailed Description

7.1 Overview

The TPS54719 is a 6-V, 7-A, synchronous step-down (buck) converter with two integrated n-channel MOSFETs. To improve performance during line and load transients, the device implements a constant frequency, peak current mode control, which reduces output capacitance and simplifies external frequency compensation design. The wide switching frequency of 200 kHz to 2000 kHz allows for efficiency and size optimization when selecting the output filter components. The switching frequency is adjusted using a resistor to ground on the RT pin.

The TPS54719 has a typical default start-up voltage of 2.4 V. The EN pin has an internal pullup current source that can be used to adjust the input voltage undervoltage lockout (UVLO) with two external resistors. In addition, the pullup current provides a default condition when the EN pin is floating for the device to operate. The total operating current for the TPS54719 is 455 µA when not switching and under no load. When the device is disabled, the supply current is less than 5 µA.

The integrated 30-mΩ MOSFETs allow for high efficiency power supply designs with continuous output currents up to 7 amperes.

The TPS54719 reduces the external component count by integrating the boot recharge diode. The bias voltage for the integrated high-side MOSFET is supplied by a capacitor on the BOOT to PH pin. The boot capacitor voltage is monitored by an UVLO circuit and turns off the high-side MOSFET when the voltage falls below a preset threshold. This BOOT circuit allows the TPS54719 to operate approaching 100%. The output voltage can be stepped down to as low as the 0.6-V reference.

The TPS54719 has a power-good comparator (PWRGD) with 2% hysteresis.

The TPS54719 minimizes excessive output overvoltage transients by taking advantage of the overvoltage power-good comparator. When the regulated output voltage is greater than 110% of the nominal voltage, the overvoltage comparator is activated, and the high-side MOSFET is turned off and masked from turning on until the output voltage is lower than 108%.

The SS/TR pin is used to minimize inrush currents or provide power supply sequencing during power up. A small value capacitor should be coupled to the pin for slow start. The SS/TR pin is discharged before the output power up to make sure there is a repeatable restart after an over-temperature fault, UVLO fault, or disabled condition.

The use of a frequency foldback circuit reduces the switching frequency during start-up and overcurrent fault conditions to help limit the inductor current.

Copyright © 2022 Texas Instruments Incorporated

7.2 Functional Block Diagram

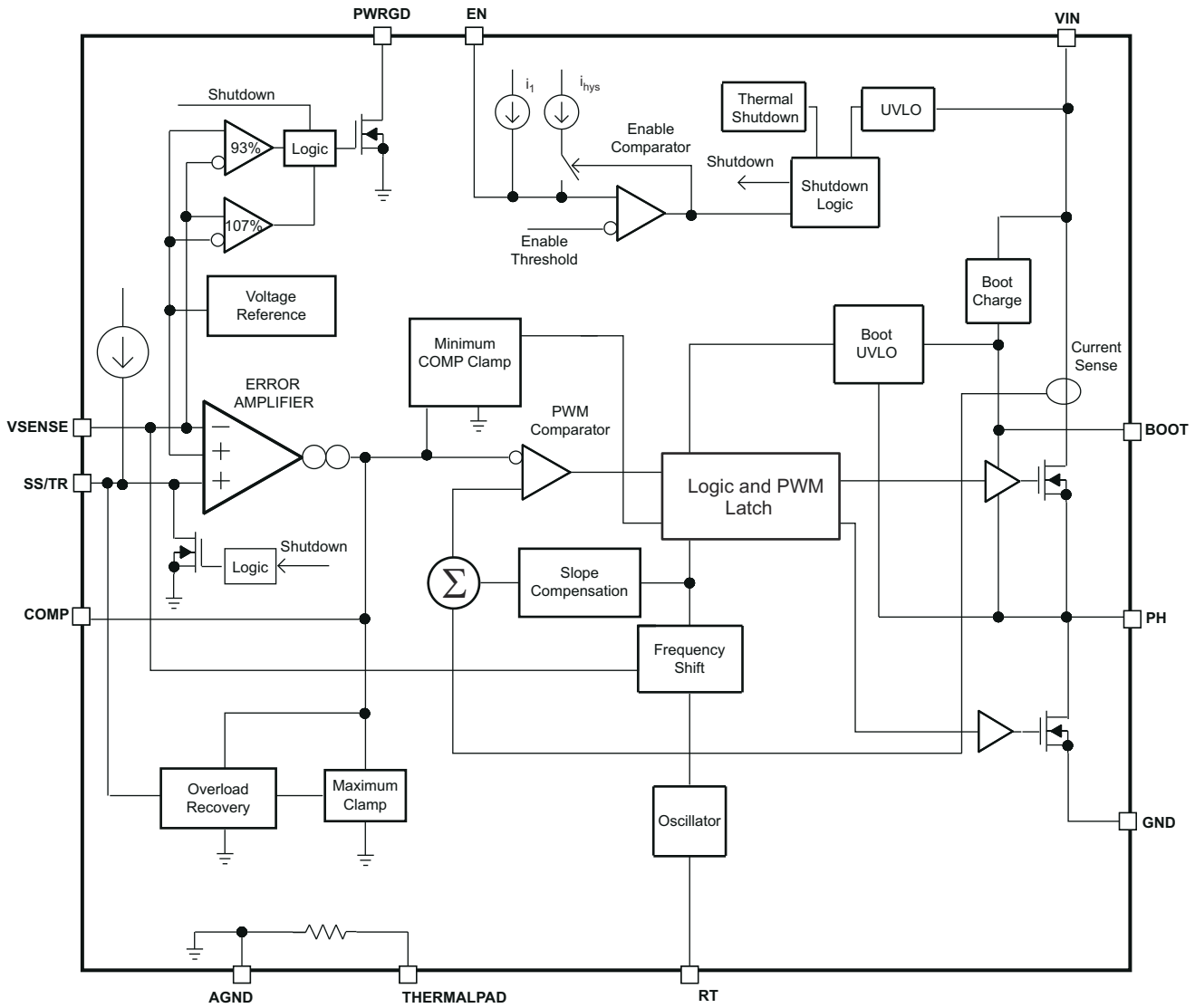

7.3 Feature Description

7.3.1 Fixed Frequency PWM Control

The TPS54719 uses an adjustable fixed frequency, peak current mode control. The output voltage is compared through external resistors on the VSENSE pin to an internal voltage reference by an error amplifier, which drives the COMP pin. An internal oscillator initiates the turn on of the high-side power switch. The error amplifier output is compared to the high-side power switch current. When the power switch current reaches the COMP voltage level, the high-side power switch is turned off and the low-side power switch is turned on. The COMP pin voltage increases and decreases as the output current increases and decreases. The device implements a current limit by clamping the COMP pin voltage to a maximum level and also implements a minimum clamp for improved transient response performance.

7.3.2 Slope Compensation And Output Current

The TPS54719 adds a compensating ramp to the switch current signal. This slope compensation prevents subharmonic oscillations as duty cycle increases. The available peak inductor current remains constant over the full duty cycle range.

Copyright © 2022 Texas Instruments Incorporated

7.3.3 Bootstrap Voltage (Boot) And Low Dropout Operation

The TPS54719 has an integrated boot regulator and requires a small ceramic capacitor between the BOOT and PH pin to provide the gate drive voltage for the high-side MOSFET. The value of the ceramic capacitor should be 0.1 µF. A ceramic capacitor with an X7R or X5R grade dielectric with a voltage rating of 10 V or higher is recommended because of the stable characteristics over temperature and voltage.

To improve dropout, the TPS54719 is designed to operate at 100% duty cycle as long as the BOOT to PH pin voltage is greater than 2.1 V, typically. The high-side MOSFET is turned off using an UVLO circuit, allowing for the low-side MOSFET to conduct when the voltage from BOOT to PH drops below 2.1 V. Since the supply current sourced from the BOOT pin is very low, the high-side MOSFET can remain on for more switching cycles than are required to refresh the capacitor, thus the effective duty cycle of the switching regulator is very high.

7.3.4 Error Amplifier

The TPS54719 has a transconductance amplifier. The error amplifier compares the VSENSE voltage to the lower of the SS/TR pin voltage or the internal 0.6-V voltage reference. The transconductance of the error amplifier is 250 µA/V during normal operation. When the voltage of VSENSE pin is below 0.6 V and the device is regulating using the SS/TR voltage, the gm is 85 µA/V. The frequency compensation components are placed between the COMP pin and ground.

7.3.5 Voltage Reference

The voltage reference system produces a precise ±1.5% voltage reference over temperature by scaling the output of a temperature stable bandgap circuit. The bandgap and scaling circuits produce 0.6 V at the non-inverting input of the error amplifier.

7.3.6 Adjusting The Output Voltage

The output voltage is set with a resistor divider from the output node to the VSENSE pin. It is recommended to use divider resistors with 1% tolerance or better. Start with a 100 kΩ for the R1 resistor and use the Equation 1 to calculate R2. To improve efficiency at very light loads consider using larger value resistors. If the values are too high the regulator is more susceptible to noise and voltage errors from the VSENSE input current are noticeable.

$$R2 = R1 \times \left(\frac{0.6\ V}{V_O - 0.6\ V} \right) \tag{1}$$

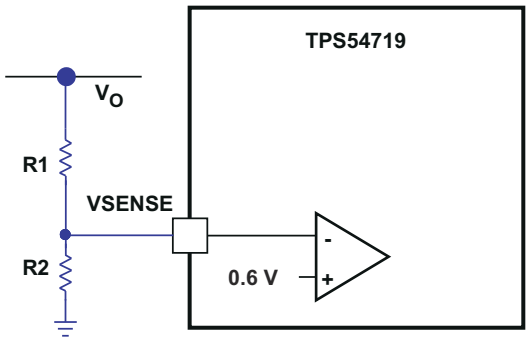

Figure 7-1. Voltage Divider Circuit

7.3.7 Enable and Adjusting Undervoltage Lockout

The TPS54719 is disabled when the VIN pin voltage falls below 2.2 V. If an application requires a higher undervoltage lockout (UVLO), use the EN pin as shown in Figure 7-2 to adjust the input voltage UVLO by using two external resistors. It is recommended to use the enable resistors to set the UVLO falling threshold (V_{STOP}) above 2.7 V. The rising threshold (V_{START}) should be set to provide enough hysteresis to allow for any input supply variations. The EN pin has an internal pullup current source that provides the default condition of the TPS54719 operating when the EN pin floats. Once the EN pin voltage exceeds 1.25 V, an additional 2.9 µA of

Copyright © 2022 Texas Instruments Incorporated

hysteresis is added. When the EN pin is pulled below 1.18 V, the 2.9 µA is removed. This additional current facilitates input voltage hysteresis.

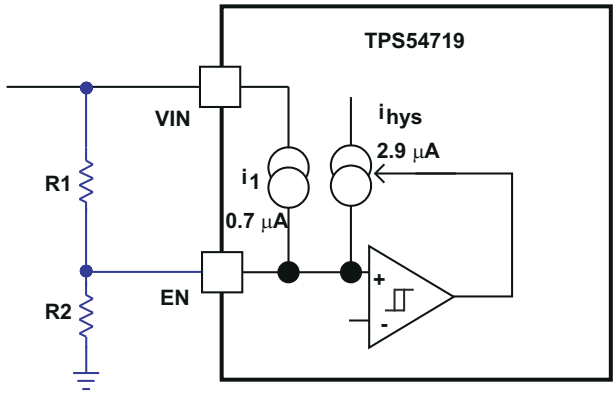

Figure 7-2. Adjustable Undervoltage Lockout

$$R1 = \frac{V_{START}\left(\frac{V_{ENFALLING}}{V_{ENRISING}}\right) - V_{STOP}}{I_P\left(1 - \frac{V_{ENFALLING}}{V_{ENRISING}}\right) + I_h} \tag{2}$$

$$R2 = \frac{R1 \times V_{ENFALLING}}{V_{STOP} - V_{ENFALLING} + R1\left(I_P + I_h\right)} \tag{3}$$

where:

- I_h = 2.9 µA
- I_P = 0.7 µA
- $V_{ENRISING}$ = 1.25 V
- $V_{ENFALLING}$ = 1.18 V

7.3.8 Slow Start/Tracking Pin

The TPS54719 regulates to the lower of the SS/TR pin and the internal reference voltage. A capacitor on the SS/TR pin to ground implements a slow start time. The TPS54719 has an internal pullup current source of 2.4 µA, which charges the external slow-start capacitor. Equation 4 calculates the required slow-start capacitor value.

$$Css(nF) = \frac{Tss(mS) \times Iss(\mu A)}{Vref(V)} \tag{4}$$

where:

- Tss is the desired slow-start time in ms
- Iss is the internal slow start charging current of 2.4 µA
- Vref is the internal voltage reference of 0.6 V

If during normal operation, VIN goes below the UVLO, the EN pin pulled below 1.18 V, or a thermal shutdown event occurs, the TPS54719 stops switching and the SS/TR is discharged to 0 volts before reinitiating a power-up sequence.

Copyright © 2022 Texas Instruments Incorporated

7.3.9 Sequencing

Many of the common power supply sequencing methods can be implemented using the SS/TR, EN, and PWRGD pins. The sequential method can be implemented using an open-drain or collector output of a power on reset pin of another device. Figure 7-3 shows the sequential method. The power good is coupled to the EN pin on the TPS54719, which enables the second power supply once the primary supply reaches regulation.

Ratio-metric start-up can be accomplished by connecting the SS/TR pins together. The regulator outputs ramp up and reach regulation at the same time. When calculating the slow start time, the pullup current source must be doubled in Equation 4. The ratio metric method is illustrated in Figure 7-5.

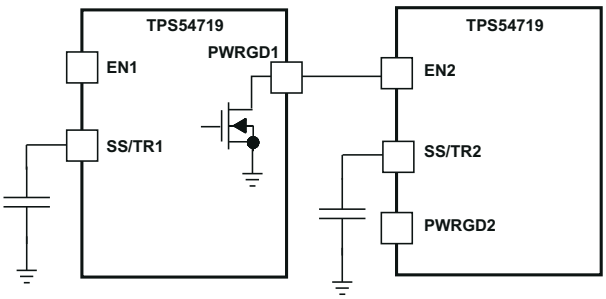

Figure 7-3. Sequential Start-Up Sequence

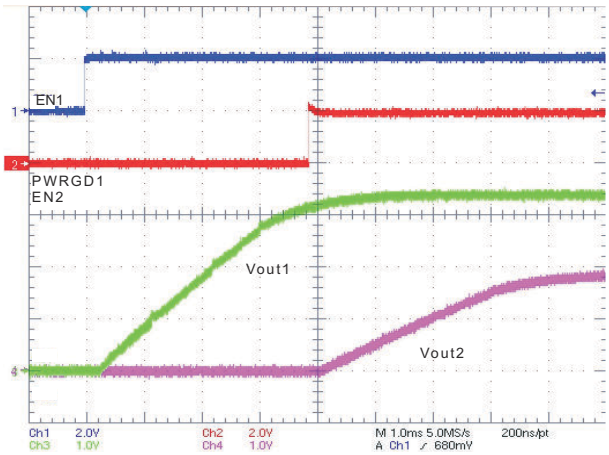

Figure 7-4. Sequential Start-Up Using EN And PWRGD

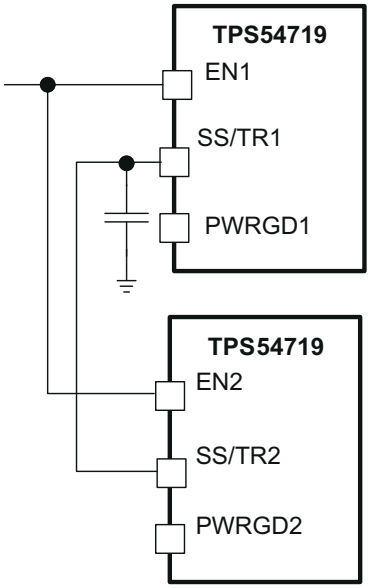

Figure 7-5. Schematic For Ratio-Metric Start-Up Sequence

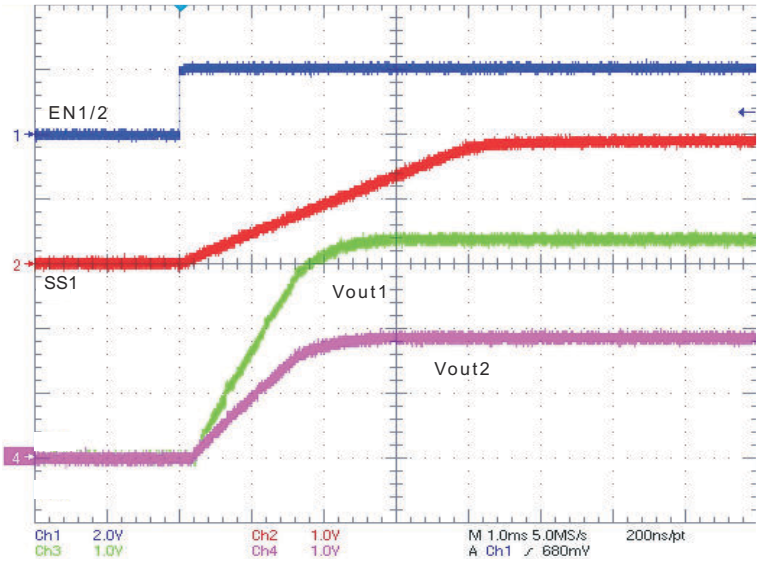

Figure 7-6. Ratio-Metric Start-Up With V_{OUT1} Leading V_{OUT2}

Ratio-metric and simultaneous power supply sequencing can be implemented by connecting the resistor network of R1 and R2 shown in Figure 7-5 to the output of the power supply that needs to be tracked or another voltage reference source. Using Equation 5 and Equation 6, the tracking resistors can be calculated to initiate the V_{OUT2} slightly before, after, or at the same time as V_{OUT1}. Equation 7 is the voltage difference between V_{OUT1} and V_{OUT2}. The ΔV variable is zero volts for simultaneous sequencing. To minimize the effect of the inherent SS/TR to VSENSE offset (Vssoffset) in the slow start circuit and the offset created by the pullup current source (Iss)

Copyright © 2022 Texas Instruments Incorporated

and tracking resistors, the Vssoffset and Iss are included as variables in the equations. To design a ratio-metric start-up in which the V_{OUT2} voltage is slightly greater than the V_{OUT1} voltage when V_{OUT2} reaches regulation, use a negative number in Equation 5 through Equation 7 for ΔV. Equation 7 will result in a positive number for applications where the V_{OUT2} is slightly lower than V_{OUT1} when V_{OUT2} regulation is achieved. As the SS/TR voltage becomes more than 85% of the nominal reference voltage, the Vssoffset becomes larger as the slow start circuits gradually handoff the regulation reference to the internal voltage reference. The SS/TR pin voltage needs to be greater than 0.87 V for a complete handoff to the internal voltage reference as shown in Figure 7-6.

$$R1 = \frac{Vout2 + \Delta V}{Vref} \times \frac{Vssoffset}{Iss} \tag{5}$$

$$R2 = \frac{Vref \times R1}{Vout2 + \Delta V - Vref} \tag{6}$$

$$\Delta V = Vout1 - Vout2 \tag{7}$$

where:

- V_{OUT2} is the regulated output of IC2
- V_{OUT1} is the output of IC1 at the moment IC2 just reaches its regulation

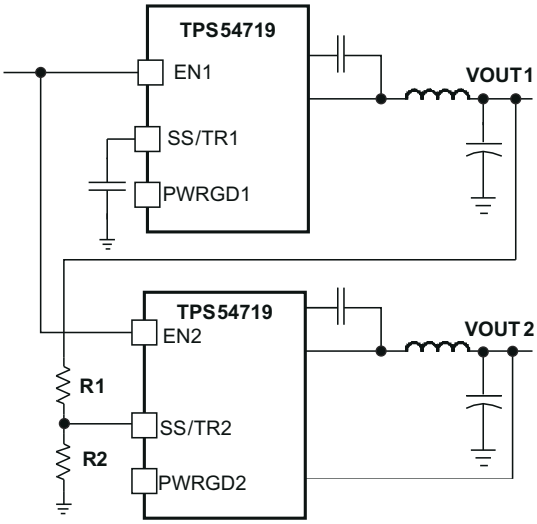

Figure 7-7. Schematic For Ratio-Metric Start-U Sequence

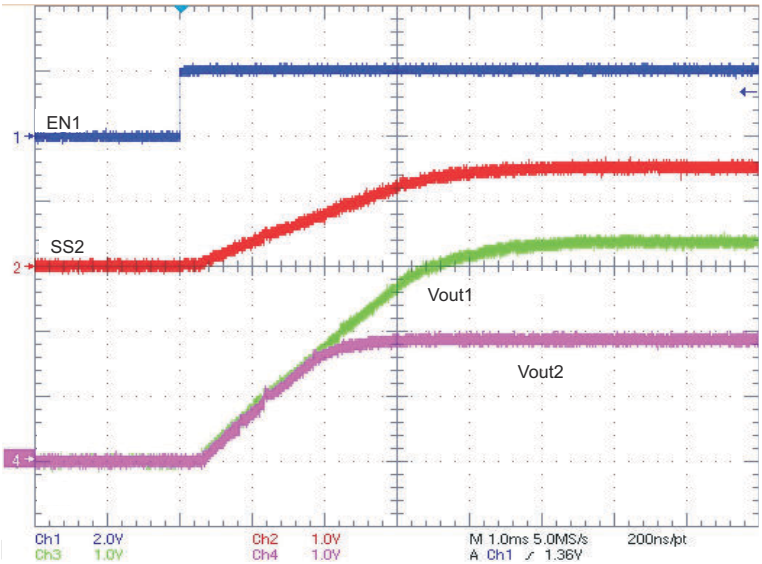

Figure 7-8. Ratio-Metric Start-Up Using Coupled SS/TR Pins

7.4 Device Functional Modes

7.4.1 Constant Switching Frequency And Timing Resistor (RT Pin)

The switching frequency of the TPS54719 is adjustable over a wide range from 200 kHz to 2000 kHz by placing a maximum of 218 kΩ and minimum of 16.9 kΩ, respectively, on the RT pin. An internal amplifier holds this pin at a fixed voltage when using an external resistor to ground to set the switching frequency. The RT is typically 0.5 V. To determine the timing resistance for a given switching frequency, use the curve in Figure 6-12 or Equation 8.

$$RT\ (k\Omega) = 84145 \times F_{SW}\,(kHz)^{-1.121} \tag{8}$$

Copyright © 2022 Texas Instruments Incorporated

$$Fsw(kHz) = 24517 \times RT(k\Omega)^{-0.89} \quad (9)$$

To reduce the solution size, one would typically set the switching frequency as high as possible, but tradeoffs of the efficiency, maximum input voltage, and minimum controllable on time should be considered.

The minimum controllable on time is typically 64 ns at full current load and 100 ns at no load, and limits the maximum operating input voltage or output voltage.

7.4.2 Overcurrent Protection

The TPS54719 implements a cycle-by-cycle current limit. During each switching cycle, the high-side switch current is compared to the voltage on the COMP pin. When the instantaneous switch current intersects the COMP voltage, the high-side switch is turned off. During overcurrent conditions that pull the output voltage low, the error amplifier responds by driving the COMP pin high, increasing the switch current. The error amplifier output is clamped internally. This clamp functions as a switch current limit.

7.4.3 Frequency Shift

To operate at high switching frequencies and provide protection during overcurrent conditions, the TPS54719 implements a frequency shift. If frequency shift was not implemented, during an overcurrent condition, the low-side MOSFET may not be turned off long enough to reduce the current in the inductor, causing a current runaway. With frequency shift, during an overcurrent condition, the switching frequency is reduced from 100%, then 50%, then 25% as the voltage decreases from 0.6 to 0 volts on VSENSE pin to allow the low-side MOSFET to be off long enough to decrease the current in the inductor. During start-up, the switching frequency increases as the voltage on VSENSE increases from 0 to 0.6 volts. See Figure 6-13 for details.

7.4.4 Reverse Overcurrent Protection

The TPS54719 implements low-side current protection by detecting the voltage across the low-side MOSFET. When the converter sinks current through its low-side FET, the control circuit turns off the low-side MOSFET if the reverse current is more than 2.7 A. By implementing this additional protection scheme, the converter is able to protect itself from excessive current during power cycling and start-up into pre-biased outputs.

7.4.5 Power Good (PWRGD Pin)

The PWRGD pin output is an open-drain MOSFET. The output is pulled low when the VSENSE voltage enters the fault condition by falling below 91% or rising above 110% of the nominal internal reference voltage. There is a 2% hysteresis on the threshold voltage, so when the VSENSE voltage rises to the good condition above 93% or falls below 108% of the internal voltage reference the PWRGD output MOSFET is turned off. It is recommended to use a pullup resistor between the values of 1 kΩ and 100 kΩ to a voltage source that is 6 V or less. The PWRGD is in a valid state once the VIN input voltage is greater than 0.8 V, typically.

7.4.6 Overvoltage Transient Protection

The TPS54719 incorporates an overvoltage transient protection (OVTP) circuit to minimize voltage overshoot when recovering from output fault conditions or strong unload transients. The OVTP feature minimizes the output overshoot by implementing a circuit to compare the VSENSE pin voltage to the OVTP threshold, which is 110% of the internal voltage reference. If the VSENSE pin voltage is greater than the OVTP threshold, the high-side MOSFET is disabled, preventing current from flowing to the output and minimizing output overshoot. When the VSENSE voltage drops lower than the OVTP threshold, which is 108% of the internal voltage reference, the high-side MOSFET is allowed to turn on the next clock cycle.

7.4.7 Thermal Shutdown

The device implements an internal thermal shutdown to protect itself if the junction temperature exceeds 155°C. The thermal shutdown forces the device to stop switching when the junction temperature exceeds the thermal trip threshold. Once the die temperature decreases below 147.5°C, the device reinitiates the power-up sequence by discharging the SS/TR pin to 0 volts. The thermal shutdown hysteresis is 7.5°C.

Copyright © 2022 Texas Instruments Incorporated

7.4.8 Small Signal Model For Loop Response

Figure 7-9 shows an equivalent model for the TPS54719 control loop, which can be modeled in a circuit simulation program to check frequency response and dynamic load response. The error amplifier is a transconductance amplifier with a gm of 250 µA/V. The error amplifier can be modeled using an ideal voltage controlled current source. The resistor Ro and capacitor Co model the open loop gain and frequency response of the amplifier. The 1-mV AC voltage source between the nodes a and b effectively breaks the control loop for the frequency response measurements. Plotting a/c shows the small signal response of the frequency compensation. Plotting a/b shows the small signal response of the overall loop. The dynamic loop response can be checked by replacing the R_L with a current source with the appropriate load step amplitude and step rate in a time domain analysis.

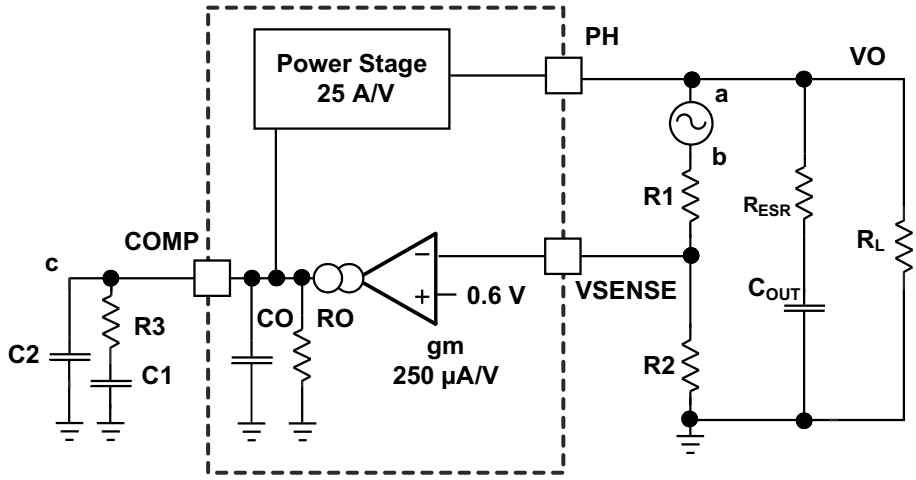

Figure 7-9. Small Signal Model For Loop Response

7.4.9 Simple Small Signal Model For Peak Current Mode Control

Figure 7-9 is a simple small signal model that can be used to understand how to design the frequency compensation. The TPS54719 power stage can be approximated to a voltage controlled current source (duty cycle modulator) supplying current to the output capacitor and load resistor. The control to output transfer function is shown in Equation 10 and consists of a dc gain, one dominant pole, and one ESR zero. The quotient of the change in switch current and the change in COMP pin voltage (node c in Figure 7-9) is the power stage transconductance. The gm for the TPS54719 is 25 A/V. The low frequency gain of the power stage frequency response is the product of the transconductance and the load resistance as shown in Equation 11. As the load current increases and decreases, the low frequency gain decreases and increases, respectively. This variation with load can seem problematic at first glance, but the dominant pole moves with load current [see Equation 12]. The combined effect is highlighted by the dashed line in the right half of Figure 7-10. As the load current decreases, the gain increases and the pole frequency lowers, keeping the 0-dB crossover frequency the same for the varying load conditions which makes it easier to design the frequency compensation.

Copyright © 2022 Texas Instruments Incorporated

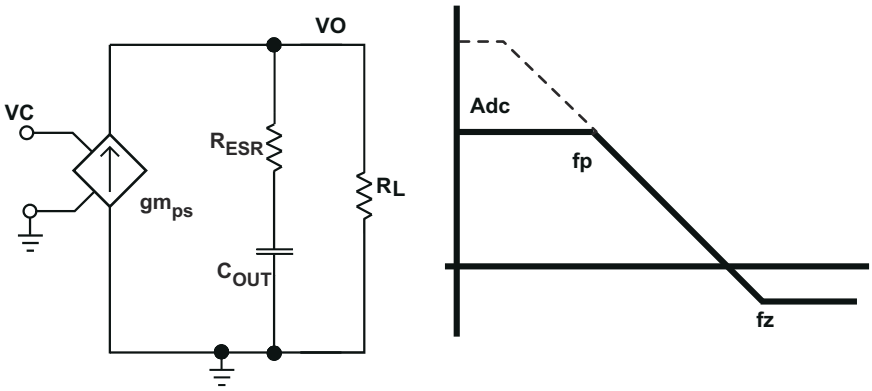

Figure 7-10. Simple Small Signal Model And Frequency Response For Peak Current Mode Control

$$\frac{vo}{vc} = Adc \times \frac{\left(1+\frac{s}{2\pi \times fz}\right)}{\left(1+\frac{s}{2\pi \times fp}\right)} \tag{10}$$

$$Adc = gm_{ps} \times R_L \tag{11}$$

$$fp = \frac{1}{C_{OUT} \times R_L \times 2\pi} \tag{12}$$

$$fz = \frac{1}{C_{OUT} \times R_{ESR} \times 2\pi} \tag{13}$$

7.4.10 Small Signal Model For Frequency Compensation

The TPS54719 uses a transconductance amplifier for the error amplifier and readily supports two of the commonly used frequency compensation circuits. The compensation circuits are shown in Figure 7-11. The Type 2 circuits are most likely implemented in high bandwidth power supply designs using low-ESR output capacitors. In Type 2A, one additional high frequency pole is added to attenuate high frequency noise.

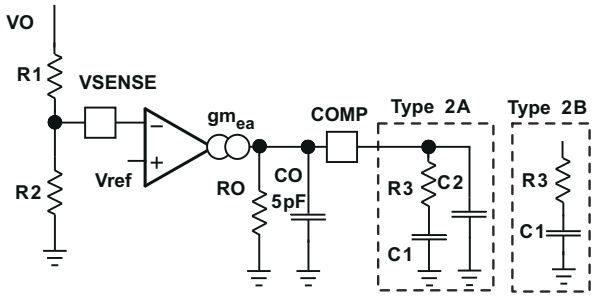

Figure 7-11. Types Of Frequency Compensation

The design guidelines for TPS54719 loop compensation are as follows:

1. The modulator pole, fpmod, and the esr zero, fz1, must be calculated using Equation 14 and Equation 15. Derating the output capacitor (C_{OUT}) can be needed if the output voltage is a high percentage of the capacitor rating. Use the capacitor manufacturer information to derate the capacitor value. Use Equation 16 and Equation 17 to estimate a starting point for the crossover frequency, fc. Equation 16 is the geometric mean of the modulator pole and the esr zero and Equation 17 is the mean of modulator pole and the

switching frequency. Use the lower value of Equation 16 or Equation 17 as the maximum crossover frequency.

$$fp\ mod = \frac{Ioutmax}{2\pi \times Vout \times Cout} \tag{14}$$

$$fz\ mod = \frac{1}{2\pi \times Resr \times Cout} \tag{15}$$

$$f_C = \sqrt{fp\ mod \times fz\ mod} \tag{16}$$

$$f_C = \sqrt{fp\ mod \times \frac{fsw}{2}} \tag{17}$$

2. R3 can be determined by

$$R3 = \frac{2\pi \times fc \times Vo \times C_{OUT}}{gm_{ea} \times Vref \times gm_{ps}} \tag{18}$$

where:

- gm_{ea} is the amplifier gain (250 µA/V)
- gm_{ps} is the power stage gain (25 A/V)

3. Place a compensation zero at the dominant pole $fp = \frac{1}{C_{OUT} \times R_L \times 2\pi}$. C1 can be determined by

$$C1 = \frac{R_L \times C_{OUT}}{R3} \tag{19}$$

4. C2 is optional. It can be used to cancel the zero from the ESR of Co.

$$C2 = \frac{Resr \times C_{OUT}}{R3} \tag{20}$$

Copyright © 2022 Texas Instruments Incorporated

8 Application and Implementation

Note

Information in the following applications sections is not part of the TI component specification, and TI does not warrant its accuracy or completeness. TI's customers are responsible for determining suitability of components for their purposes, as well as validating and testing their design implementation to confirm system functionality.

8.1 Application Information

This example details the design of a high frequency switching regulator design using ceramic output capacitors. This design is available as the PWR037-002 evaluation module (EVM). A few parameters must be known in order to start the design process. These parameters are typically determined on the system level.

8.2 Typical Application

8.2.1 High Frequency, 1.8-V Output Power Supply Design With Adjusted UVLO

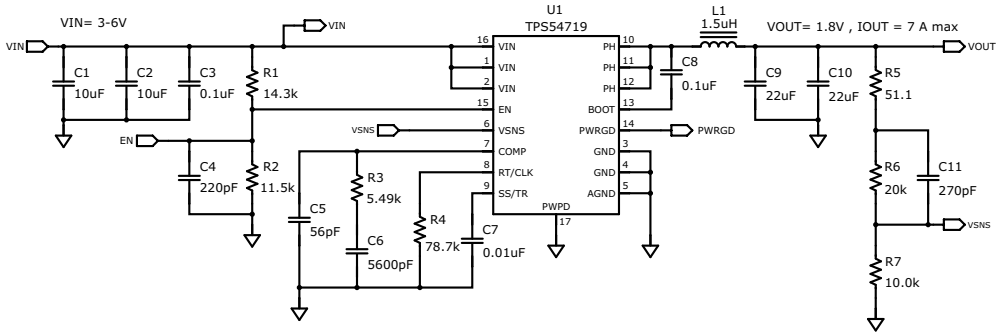

8.2.2 Design Requirements

For this example, start with the following known parameters:

DESIGN PARAMETER	VALUE
Output Voltage	1.8 V
Transient Response 1.75 to 5.25 A load step	ΔVout = 6 %
Maximum Output Current	7 A
Input Voltage	3 V - 6 V
Output Voltage Ripple	< 30 mV p-p
Start Input Voltage (rising VIN)	2.9 V
Stop Input Voltage (falling VIN)	2.66 V
Switching Frequency (Fsw)	500 kHz

8.2.3 Detailed Design Procedure

8.2.3.1 Selecting The Switching Frequency

The first step is to decide on a switching frequency for the regulator. Typically, the user wants to choose the highest switching frequency possible since this produces the smallest solution size. The high switching frequency allows for lower valued inductors and smaller output capacitors compared to a power supply that switches at a lower frequency. However, the highest switching frequency causes extra switching losses, which hurt the performance of the converter. The converter is capable of running from 200 kHz to 2 MHz. Unless a small solution size is an ultimate goal, a moderate switching frequency of 500 kHz is selected to achieve both a small solution size and a high efficiency operation. Using Equation 8, R4 is calculated to be 77.8 kΩ. A standard 1% 78.7-kΩ value was chosen in the design.

8.2.3.2 Output Inductor Selection

The inductor selected works for the entire TPS54719 input voltage range. To calculate the value of the output inductor, use Equation 21. K_{IND} is a coefficient that represents the amount of inductor ripple current relative to the maximum output current. The inductor ripple current is filtered by the output capacitor. Therefore, choosing high inductor ripple currents impacts the selection of the output capacitor since the output capacitor must have a ripple current rating equal to or greater than the inductor ripple current. In general, the inductor ripple value is at the discretion of the designer; however, K_{IND} is normally from 0.1 to 0.3 for the majority of applications.

For this design example, use K_{IND} = 0.3 and the minimum inductor value is calculated to be 1.2 µH. For this design, a larger standard value of 1.5 µH was chosen. For the output filter inductor, it is important that the RMS current and saturation current ratings not be exceeded. The RMS and peak inductor current can be found from Equation 23 and Equation 24.

For this design, the RMS inductor current is 7.017 A and the peak inductor current is 7.84 A. The chosen inductor is a Würth 744311150 1.5 µH. It has a saturation current rating of 14 A (30% inductance loss) and an RMS current rating of 11 A (40 °C temperature rise). The series resistance is 6.6 mΩ typical.

The current flowing through the inductor is the inductor ripple current plus the output current. During power up, faults, or transient load conditions, the inductor current can increase above the calculated peak inductor current level calculated above. In transient conditions, the inductor current can increase up to the switch current limit of the device. For this reason, the most conservative approach is to specify an inductor with a saturation current rating equal to or greater than the switch current limit rather than the peak inductor current.

$$L1 = \frac{Vinmax - Vout}{Io \times Kind} \times \frac{Vout}{Vinmax \times fsw} \tag{21}$$

$$Iripple = \frac{Vinmax - Vout}{L1} \times \frac{Vout}{Vinmax \times fsw} \tag{22}$$

$$ILrms = \sqrt{Io^2 + \frac{1}{12} \times \left(\frac{Vo \times (Vinmax - Vo)}{Vinmax \times L1 \times fsw}\right)^2} \tag{23}$$

$$ILpeak = Iout + \frac{Iripple}{2} \tag{24}$$

8.2.3.3 Output Capacitor

There are three primary considerations for selecting the value of the output capacitor. The output capacitor determines the modulator pole, the output voltage ripple, and how the regulator responds to a large change in load current. The output capacitance needs to be selected based on the more stringent of these three criteria.

The desired response to a large change in the load current is the first criteria. The output capacitor needs to supply the load with current when the regulator can not. This situation would occur if there are desired hold-up times for the regulator where the output capacitor must hold the output voltage above a certain level for a specified amount of time after the input power is removed. The regulator is temporarily not able to supply sufficient output current if there is a large, fast increase in the current needs of the load, such as transitioning from no load to a full load. The regulator response to the load step change is limited by the control loop bandwidth, F_{CO}. The output capacitor must be sized to supply the extra current without excessive output voltage drop until the control loop can respond to the load change. Equation 25 shows the minimum output capacitance necessary for an instantaneous load step change. Practical circuits will have a slew rate limited load step and will typically require less capacitance.

For this example, the transient load response is specified as a 6% change in Vout for a load step from 1.75 A (25%) to 5.25 A (75%), and ΔVout = 0.06 × 1.8 = 108 mV. For a load step slew rate of 30 mA / µsec, 2 × 22 µF is sufficient to meet the voltage drop requirement. The ESR of the output capacitor is ignored as the ESR of ceramic capacitors is small.

Copyright © 2022 Texas Instruments Incorporated

Equation 26 calculates the minimum output capacitance needed to meet the output voltage ripple specification. In this case, the maximum output voltage ripple is 30 mV. Under this requirement, Equation 26 yields 14 µF.

$$Co > \frac{\Delta I_{OUT}}{F_{CO} \times \Delta V_{OUT}} \tag{25}$$

$$Co > \frac{1}{8 \times fsw} \times \frac{1}{\frac{Voripple}{Iripple}} \tag{26}$$

where:

- ΔIout is the change in output current
- Fsw is the regulators switching frequency
- ΔVout is the allowable change in the output voltage
- Vripple is the maximum allowable output voltage ripple
- Iripple is the inductor ripple current

Equation 27 calculates the maximum ESR an output capacitor can have to meet the output voltage ripple specification. Equation 27 indicates the ESR should be less than 28.6 mΩ. In this case, the ESR of the ceramic capacitor is much less than 17.9 mΩ.

Additional capacitance de-ratings for aging, temperature and DC bias should be factored in which increases this minimum value. For this example, two 22-µF 10-V X5R ceramic capacitors with 3 mΩ of ESR are used.

Capacitors generally have limits to the amount of ripple current they can handle without failing or producing excess heat. An output capacitor that can support the inductor ripple current must be specified. Some capacitor data sheets specify the RMS (Root Mean Square) value of the maximum ripple current. Equation 28 can be used to calculate the RMS ripple current the output capacitor needs to support. For this application, Equation 28 yields 485 mA.

$$Resr < \frac{Voripple}{Iripple} \tag{27}$$

$$Icorms = \frac{Vout \times (Vinmax - Vout)}{\sqrt{12} \times Vinmax \times L1 \times fsw} \tag{28}$$

8.2.3.4 Input Capacitor

The TPS54719 requires a high quality ceramic, type X5R or X7R, input decoupling capacitor of at least 10 µF of effective capacitance and in some applications a bulk capacitance. The effective capacitance includes any DC bias effects. The voltage rating of the input capacitor must be greater than the maximum input voltage. The capacitor must also have a ripple current rating greater than the maximum input current ripple of the TPS54719. The input ripple current can be calculated using Equation 29.

The value of a ceramic capacitor varies significantly over temperature and the amount of DC bias applied to the capacitor. The capacitance variations due to temperature can be minimized by selecting a dielectric material that is stable over temperature. X5R and X7R ceramic dielectrics are usually selected for power regulator capacitors because they have a high capacitance to volume ratio and are fairly stable over temperature. The output capacitor must also be selected with the DC bias taken into account. The capacitance value of a capacitor decreases as the DC bias across a capacitor increases.

For this example design, ceramic capacitors with at least a 10-V voltage rating are required to support the maximum input voltage. For this example, two 10-µF and one 0.1-µF, 10-V capacitors in parallel have been selected. The input capacitance value determines the input ripple voltage of the regulator. The input voltage ripple can be calculated using Equation 30. Using the design example values, Ioutmax = 7 A, Cin = 20 µF, and Fsw = 500 kHz, yields an input voltage ripple of 174 mV and a rms input ripple current of 3.43 A.

Copyright © 2022 Texas Instruments Incorporated

$$Icirms = Iout \times \sqrt{\frac{Vout}{Vinmin} \times \frac{(Vinmin - Vout)}{Vinmin}} \tag{29}$$

$$\Delta Vin = \frac{Ioutmax \times 0.25}{Cin \times fsw} \tag{30}$$

8.2.3.5 Slow-Start Capacitor

The slow-start capacitor determines the minimum amount of time it takes for the output voltage to reach its nominal programmed value during power up. This is useful if a load requires a controlled voltage slew rate. This is also used if the output capacitance is very large and would require large amounts of current to quickly charge the capacitor to the output voltage level. The large currents necessary to charge the capacitor can make the TPS54719 reach the current limit or excessive current draw from the input power supply can cause the input voltage rail to sag. Limiting the output voltage slew rate solves both of these problems.

The slow-start capacitor value can be calculated using Equation 4. For the example circuit, the slow-start time is not too critical since the output capacitor value is 2 × 22 µF, which does not require much current to charge to 1.8 V. The example circuit has the slow start time set to an arbitrary value of 2.5 ms, which requires a 10-nF capacitor. In TPS54719, Iss is 2.4 µA and Vref is 0.6 V.

8.2.3.6 Bootstrap Capacitor Selection

A 0.1-µF ceramic capacitor must be connected between the BOOT to PH pin for proper operation. It is recommended to use a ceramic capacitor with X5R or better grade dielectric. The capacitor should have 10-V or higher voltage rating.

8.2.3.7 Undervoltage Lockout Set Point

The Undervoltage Lockout (UVLO) can be adjusted using an external voltage divider on the EN pin of the TPS54719. The UVLO has two thresholds: one for power up when the input voltage is rising and one for power down or brown outs when the input voltage is falling. For the example design, the supply should turn on and start switching once the input voltage increases above 2.794 V (V_{START}). After the regulator starts switching, it should continue to do so until the input voltage falls below 2.595 V (V_{STOP}).

The programmable UVLO and enable voltages are set using a resistor divider between Vin and ground to the EN pin. Equation 2 and Equation 3 can be used to calculate the resistance values necessary. From Equation 2 and Equation 3, a 14.3 kΩ between VIN and EN and a 11.5 kΩ between EN and ground are required to produce the 2.794 and 2.595 volt start and stop voltages.

8.2.3.8 Output Voltage And Feedback Resistors Selection

For the example design, 20.0 kΩ was selected for R6. Using Equation 31, R7 is calculated as 10.0 kΩ.

$$R7 = \frac{Vref}{Vo - Vref} R6 \tag{31}$$

Due to the internal design of the TPS54719, there is a minimum output voltage limit for any given input voltage. The output voltage can never be lower than the internal voltage reference of 0.6 V. Above 0.6 V, the output voltage may be limited by the minimum controllable on time. The minimum output voltage in this case is given by Equation 32.

$$V_{OUT(MIN)} = V_{IN}\left(\frac{t_{ON}}{t_S}\right) - I_{OUT}(R_{DS} + R_L) - \left(0.7V - (I_{OUT} \times R_{DS})\right)\frac{t_{DEAD}}{t_S} \tag{32}$$

where:

- $V_{OUT(MIN)}$ = minimum achievable output voltage
- t_{ON} = minimum controllable on time (64 ns - 100 nsec typical)

Copyright © 2022 Texas Instruments Incorporated

- $t_S = 1/f_{SW}$ (switching frequency)
- t_{DEAD} = dead time (70 nsec typical)
- V_{IN} = maximum input voltage
- R_{DS} = minimum high side MOSFET on resistance (26 - 35 mΩ)
- I_{OUT} = minimum load current
- R_L = series resistance of output inductor

There is also a maximum achievable output voltage which is limited by the minimum off time. The maximum output voltage is given by Equation 33

$$V_{OUT(MAX)} = V_{IN}\left(1 - \frac{t_{OFF}}{t_S}\right) - I_{OUT}\left(R_{DS} + R_L\right) - \left(V_{IN} + 0.7V - \left(I_{OUT} \times R_{DS}\right)\right)\frac{t_{DEAD}}{t_S} \tag{33}$$

where:

- $V_{OUT(MAX)}$ = maximum achievable output voltage
- $t_S = 1/f_{SW}$ (switching frequency)
- t_{OFF} = minimum off time (0 nsec typical)
- t_{DEAD} = dead time (70 nsec typical)
- V_{IN} = minimum input voltage
- I_{OUT} = maximum load current
- R_{DS} = maximum high side MOSFET on resistance (60 - 70 mΩ)
- R_L = series resistance of output inductor

8.2.3.9 Compensation

There are several possible methods to design closed loop compensation for dc/dc converters. For the ideal current mode control, the design equations can be easily simplified. The power stage gain is constant at low frequencies, and rolls off at -20 dB/decade above the modulator pole frequency. The power stage phase is 0 degrees at low frequencies and starts to fall one decade below the modulator pole frequency reaching a minimum of -90 degrees one decade above the modulator pole frequency. The modulator pole is a simple pole shown in Equation 34.

$$fp\ mod = \frac{Ioutmax}{2\pi \times Vout \times Cout} \tag{34}$$

For the TPS54719, most circuits will have relatively high amounts of slope compensation. As more slope compensation is applied, the power stage characteristics will deviate from the ideal approximations. The phase loss of the power stage will now approach -180 degrees, making compensation more difficult. The power stage transfer function can be solved but it is a tedious hand calculation that does not lend itself to simple approximations. It is best to use Pspice or TINA-TI to accurately model the power stage gain and phase so that a reliable compensation circuit can be designed. That is the technique used in this design procedure. Using the pspice model of (insert link here). Apply the values calculated previously to the output filter components of L1, C9 and C10. Set Rload to the appropriate value. For this design, L1 = 1.5 µH. C9 and C10 are set to 22 µF each, and the ESR is set to 3 mΩ. The Rload resistor is 1.8 V / 3.5 A = 514 mΩ for one half rated load. Now the power stage characteristic can be plotted as shown in Figure 8-1.

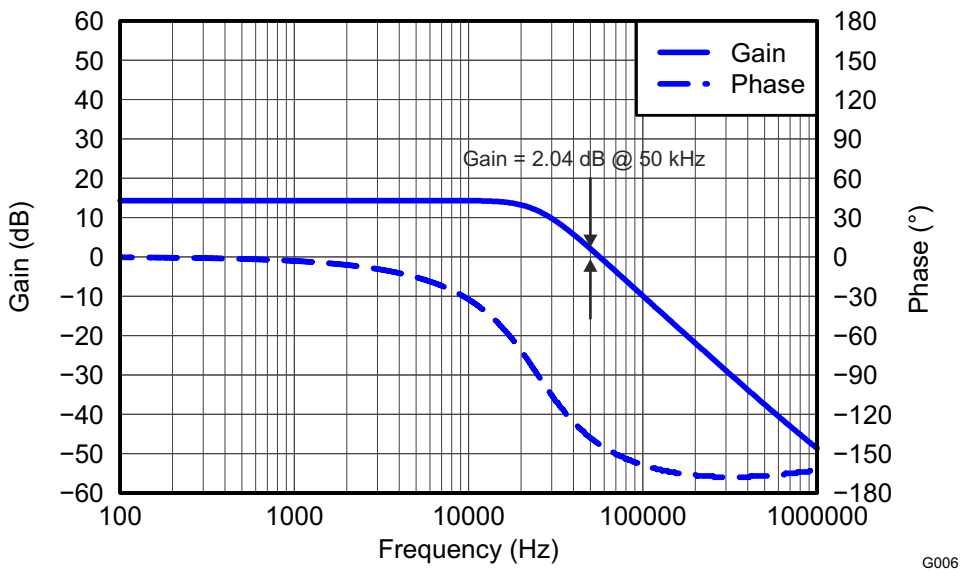

Figure 8-1. Power Stage Gain And Phase Characteristics

For this design, the intended crossover frequency is 50 kHz. From the power stage gain and phase plots, the gain at 50 kHz is 2.04 dB and the phase is about –135 degrees. For 60 degrees of phase margin, additional phase boost from a feedforward capacitor in parallel with the upper resistor of the voltage set point divider will be required. R3 sets the gain of the compensated error amplifier to be equal and opposite the power stage gain at crossover. The required value of R3 can be calculated from Equation 35.

$$R3 = \frac{10^{\frac{-G_{PWRSTG}}{20}}}{gm_{EA}} \cdot \sqrt{\frac{V_{out}}{V_{REF}}} \tag{35}$$

To maximize phase gain, the compensator zero is placed one decade below the crossover frequency of 50 kHz. The required value for C6 is given by Equation 36.

$$C6 = \frac{1}{2 \cdot \pi \cdot R3 \cdot \frac{F_{CO}}{10}} \tag{36}$$

To maximize phase gain the high frequency pole is placed one decade above the crossover frequency of 50 kHz. The pole can also be useful to offset the ESR of aluminum electrolytic output capacitors. The value for C5 can be calculated from Equation 37.

$$C5 = \frac{1}{2 \cdot \pi \cdot R3 \cdot F_P} \tag{37}$$

For maximum phase boost, the pole frequency F_P will typically be one decade above the intended crossover frequency F_{CO}.

The feedforward capacitor, C11, is used to increase the phase boost at crossover above what is normally available from Type II compensation. It places an additional zero/pole pair located at Equation 38 and Equation 39.

$$F_Z = \frac{1}{2 \cdot \pi \cdot C11 \cdot R6} \tag{38}$$

Copyright © 2022 Texas Instruments Incorporated

$$F_P = \frac{1}{2 \cdot \pi \cdot C11 \cdot R6 \,||\, R7} \tag{39}$$

This zero and pole pair is not independent. Once the zero location is chosen, the pole is fixed as well. For optimum performance, the zero and pole should be located symmetrically about the intended crossover frequency. The required value for C10 can calculated from Equation 40.

$$C11 = \frac{1}{2 \cdot \pi \cdot R6 \cdot F_{CO} \cdot \sqrt{\frac{V_{REF}}{V_{OUT}}}} \tag{40}$$

For this design the calculated values for the compensation components are R3 = 5.49 kΩ, C6 = 5600 pF, C5 = 56 pF, and C11 = 270 pF.

8.2.4 Application Curves

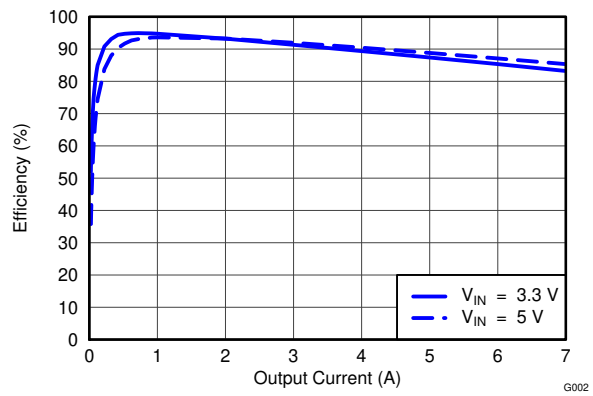

Figure 8-2. Efficiency vs Load Current

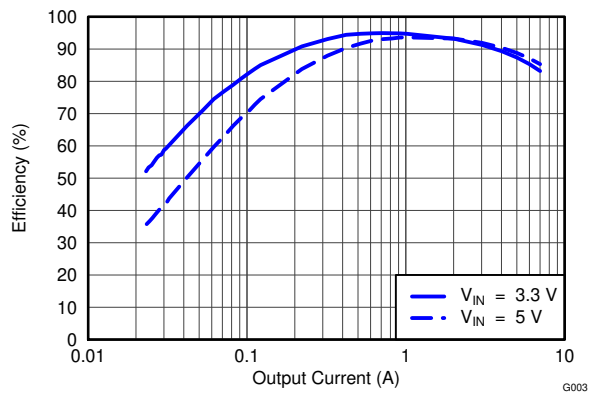

Figure 8-3. Efficiency vs Load Current

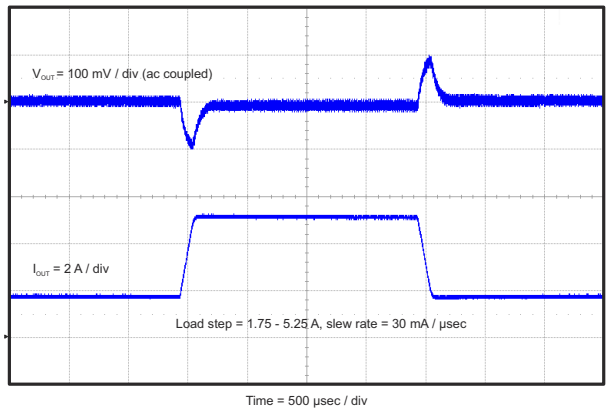

Figure 8-4. Transient Response, 3.5 A Step

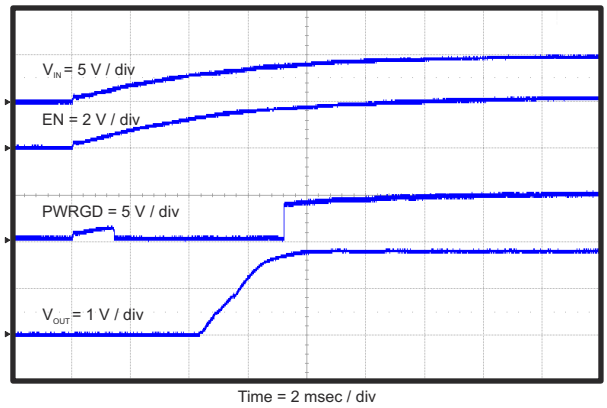

Figure 8-5. Power Up Relative To VIN

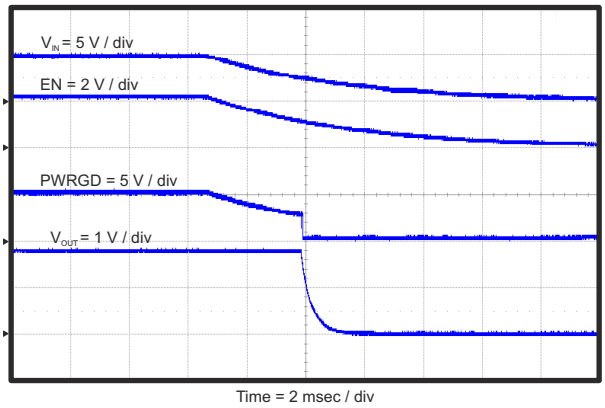

Figure 8-6. Power Down Relative To VIN

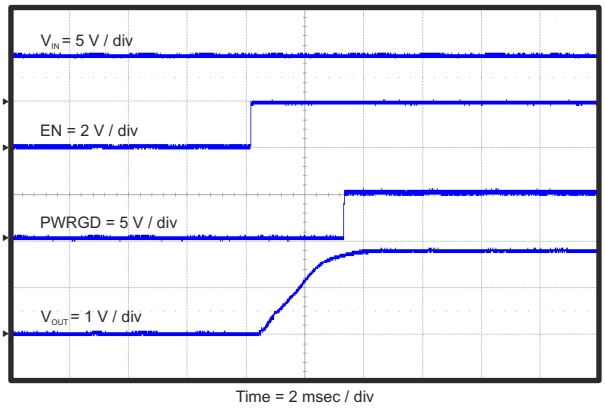

Figure 8-7. Power Up Relative To EN

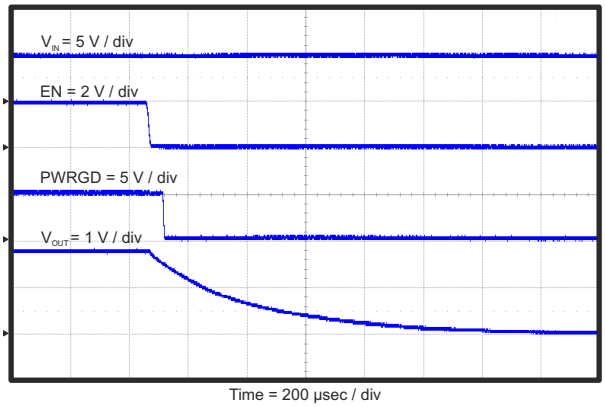

Figure 8-8. Power Down Relative To EN

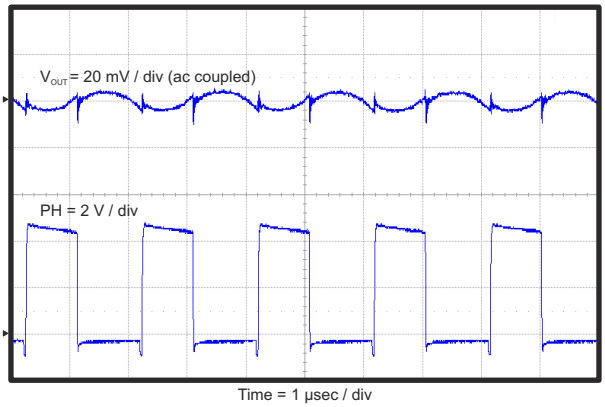

Figure 8-9. Output Ripple, I_{OUT} = 7 A

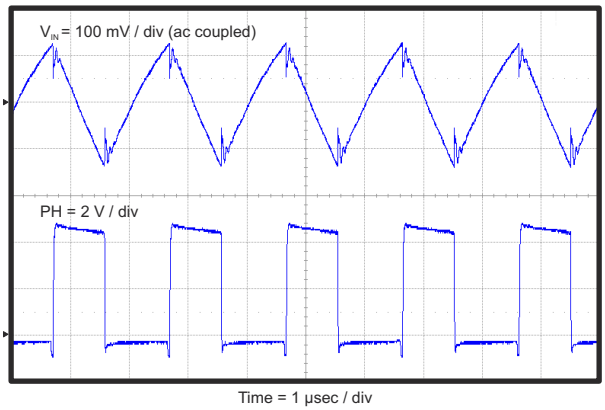

Figure 8-10. Input Ripple, I_{OUT} = 7 A

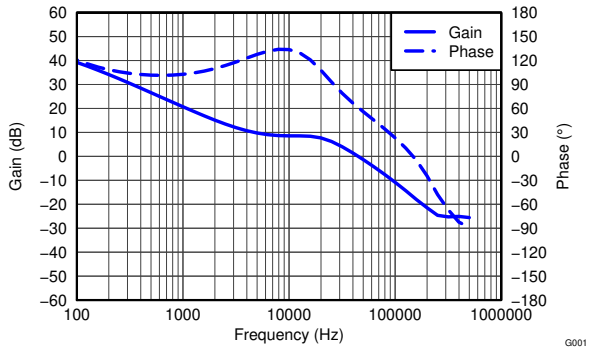

Figure 8-11. Closed Loop Response, V_{IN} = 5 V, I_{OUT} = 3.5 A

Copyright © 2022 Texas Instruments Incorporated

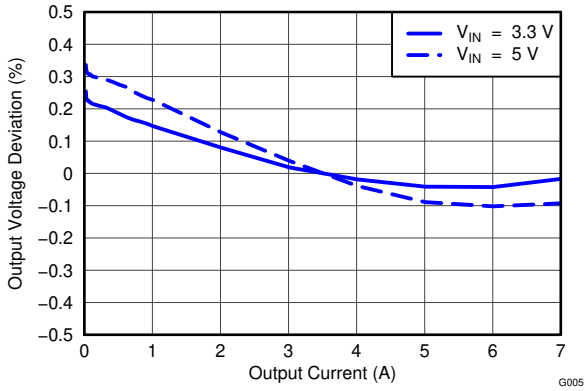

Figure 8-12. Output Voltage Regulation vs Load Current

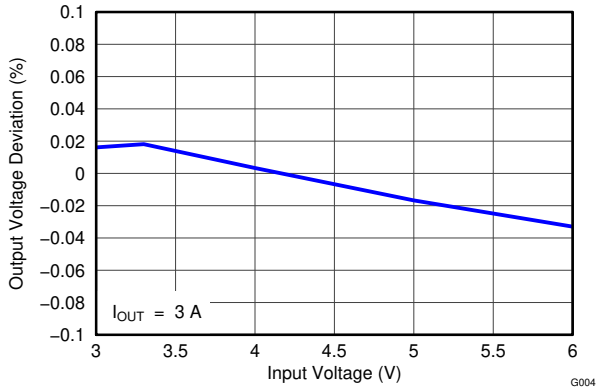

I_{OUT} = 3 A

Figure 8-13. Output Voltage Regulation vs Input Voltage

9 Power Supply Recommendations

The input voltage for VIN pin should be well controlled to avoid exceeding the maximum voltage rating of 7 V; otherwise, the device can have risk of damage.

10 Layout

10.1 Layout Guidelines

Layout is a critical portion of good power supply design. There are several signal paths that conduct fast changing currents or voltages that can interact with stray inductance or parasitic capacitance to generate noise or degrade the power supplies performance. Care should be taken to minimize the loop area formed by the bypass capacitor connections and the VIN pins. See Figure 10-1 for a PCB layout example. The GND pins and AGND pin should be tied directly to the power pad under the IC. The power pad should be connected to any internal PCB ground planes using multiple vias directly under the IC. Additional vias can be used to connect the top side ground area to the internal planes near the input and output capacitors. For operation at full rated load, the top side ground area along with any additional internal ground planes must provide adequate heat dissipating area.

Locate the input bypass capacitor as close to the IC as possible. The PH pin should be routed to the output inductor. Since the PH connection is the switching node, the output inductor should be located very close to the PH pins, and the area of the PCB conductor minimized to prevent excessive capacitive coupling. The boot capacitor must also be located close to the device. The sensitive analog ground connections for the feedback voltage divider, compensation components, slow start capacitor and frequency set resistor should be connected to a separate analog ground trace as shown. The RT pin is particularly sensitive to noise so the RT resistor should be located as close as possible to the IC and routed with minimal lengths of trace. The additional external components can be placed approximately as shown. It may be possible to obtain acceptable performance with alternate PCB layouts, however this layout has been shown to produce good results and is meant as a guideline.

Copyright © 2022 Texas Instruments Incorporated

10.2 Layout Example

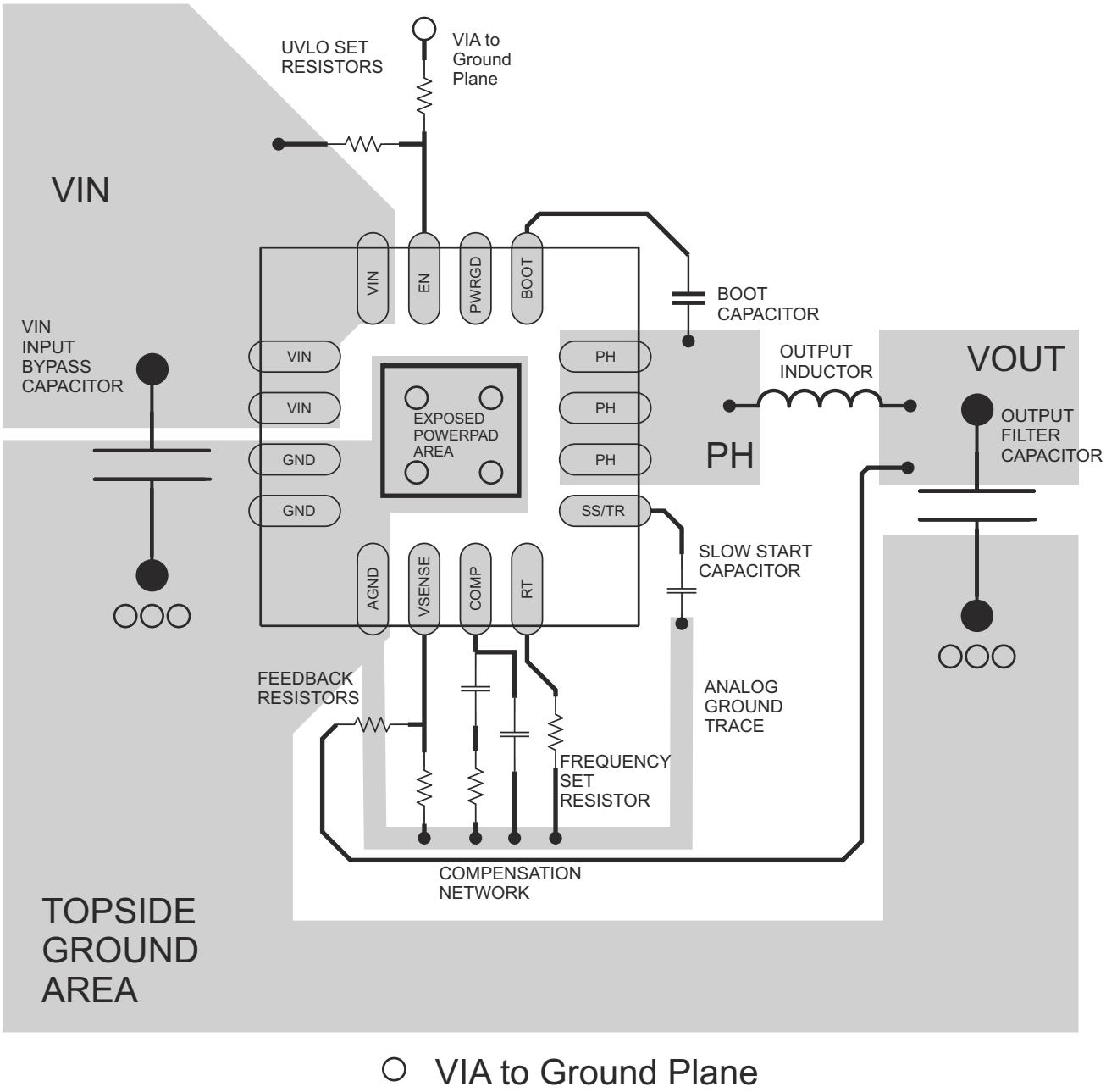

Figure 10-1. PCB Layout Example

10.2.1 Power Dissipation Estimate

The following formulas show how to estimate the IC power dissipation under continuous conduction mode (CCM) operation. The power dissipation of the IC (Ptot) includes the following:

- Conduction loss (Pcon)
- Dead time loss (Pd)
- Switching loss (Psw)
- Gate drive loss (Pgd)
- Supply current loss (Pq)

$Pcon = Io^2 \times Rdson_temp$

$Pd = \mathit{f}sw \times Iout \times 0.7 \times 70 \times 10^{-9}$

$Psw = 0.5 \times Vin \times Io \times \mathit{f}sw \times 9 \times 10^{-9}$

$Pgd = 2 \times Vin \times 6 \times 10^{-9} \times \mathit{f}sw$

$Pq = 455 \times 10^{-6} \times Vin$

where:

- IOUT is the output current (A)
- Rdson is the on-resistance of the high-side MOSFET (Ω)
- VIN is the input voltage (V)
- $\mathit{f}$sw is the switching frequency (Hz)

So

$Ptot = Pcon + Pd + Psw + Pgd + Pq$

For given TA,

$TJ = TA + Rth \times Ptot$

For given TJMAX = 140°C

$TAmax = TJMAX – Rth \times Ptot$

where:

- Ptot is the total device power dissipation (W)
- TA is the ambient temperature (°C)
- TJ is the junction temperature (°C)
- Rth is the thermal resistance of the package (°C/W)
- TJMAX is maximum junction temperature (°C)
- TAMAX is maximum ambient temperature (°C)

There are additional power losses in the regulator circuit due to the inductor AC and DC losses and trace resistance that impact the overall efficiency of the regulator.

Copyright © 2022 Texas Instruments Incorporated

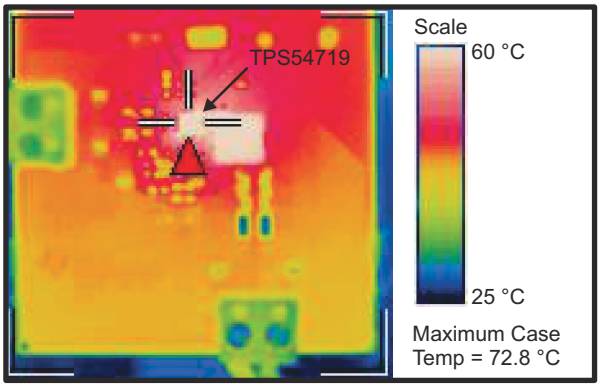

Figure 10-2. Thermal Image, I_{OUT} = 7 A

11 Device and Documentation Support

11.1 Receiving Notification of Documentation Updates

To receive notification of documentation updates, navigate to the device product folder on ti.com. Click on *Subscribe to updates* to register and receive a weekly digest of any product information that has changed. For change details, review the revision history included in any revised document.

11.2 Support Resources

TI E2E™ support forums are an engineer's go-to source for fast, verified answers and design help — straight from the experts. Search existing answers or ask your own question to get the quick design help you need.

Linked content is provided "AS IS" by the respective contributors. They do not constitute TI specifications and do not necessarily reflect TI's views; see TI's Terms of Use.

11.3 Trademarks

WEBENCH™ and TI E2E™ are trademarks of Texas Instruments.
All trademarks are the property of their respective owners.

11.4 Electrostatic Discharge Caution

This integrated circuit can be damaged by ESD. Texas Instruments recommends that all integrated circuits be handled with appropriate precautions. Failure to observe proper handling and installation procedures can cause damage.

ESD damage can range from subtle performance degradation to complete device failure. Precision integrated circuits may be more susceptible to damage because very small parametric changes could cause the device not to meet its published specifications.

11.5 Glossary

TI Glossary	This glossary lists and explains terms, acronyms, and definitions.

12 Mechanical, Packaging, and Orderable Information

The following pages include mechanical, packaging, and orderable information. This information is the most current data available for the designated devices. This data is subject to change without notice and revision of this document. For browser-based versions of this data sheet, refer to the left-hand navigation.

Copyright © 2022 Texas Instruments Incorporated

PACKAGING INFORMATION

Orderable part number	Status (1)	Material type (2)	Package | Pins	Package qty | Carrier	RoHS (3)	Lead finish/ Ball material (4)	MSL rating/ Peak reflow (5)	Op temp (°C)	Part marking (6)
TPS54719RTER	Active	Production	WQFN (RTE) | 16	3000 | LARGE T&R	Yes	NIPDAU	Level-1-260C-UNLIM	-40 to 140	54719
TPS54719RTER.B	Active	Production	WQFN (RTE) | 16	3000 | LARGE T&R	Yes	NIPDAU	Level-1-260C-UNLIM	-40 to 140	54719
TPS54719RTET	Active	Production	WQFN (RTE) | 16	250 | SMALL T&R	Yes	NIPDAU	Level-1-260C-UNLIM	-40 to 140	54719
TPS54719RTET.B	Active	Production	WQFN (RTE) | 16	250 | SMALL T&R	Yes	NIPDAU	Level-1-260C-UNLIM	-40 to 140	54719

(1) **Status:** For more details on status, see our product life cycle.

(2) **Material type:** When designated, preproduction parts are prototypes/experimental devices, and are not yet approved or released for full production. Testing and final process, including without limitation quality assurance, reliability performance testing, and/or process qualification, may not yet be complete, and this item is subject to further changes or possible discontinuation. If available for ordering, purchases will be subject to an additional waiver at checkout, and are intended for early internal evaluation purposes only. These items are sold without warranties of any kind.

(3) **RoHS values:** Yes, No, RoHS Exempt. See the TI RoHS Statement for additional information and value definition.

(4) **Lead finish/Ball material:** Parts may have multiple material finish options. Finish options are separated by a vertical ruled line. Lead finish/Ball material values may wrap to two lines if the finish value exceeds the maximum column width.

(5) **MSL rating/Peak reflow:** The moisture sensitivity level ratings and peak solder (reflow) temperatures. In the event that a part has multiple moisture sensitivity ratings, only the lowest level per JEDEC standards is shown. Refer to the shipping label for the actual reflow temperature that will be used to mount the part to the printed circuit board.

(6) **Part marking:** There may be an additional marking, which relates to the logo, the lot trace code information, or the environmental category of the part.

Multiple part markings will be inside parentheses. Only one part marking contained in parentheses and separated by a "~" will appear on a part. If a line is indented then it is a continuation of the previous line and the two combined represent the entire part marking for that device.

Important Information and Disclaimer: The information provided on this page represents TI's knowledge and belief as of the date that it is provided. TI bases its knowledge and belief on information provided by third parties, and makes no representation or warranty as to the accuracy of such information. Efforts are underway to better integrate information from third parties. TI has taken and continues to take reasonable steps to provide representative and accurate information but may not have conducted destructive testing or chemical analysis on incoming materials and chemicals. TI and TI suppliers consider certain information to be proprietary, and thus CAS numbers and other limited information may not be available for release.

In no event shall TI's liability arising out of such information exceed the total purchase price of the TI part(s) at issue in this document sold by TI to Customer on an annual basis.

TAPE AND REEL INFORMATION

REEL DIMENSIONS

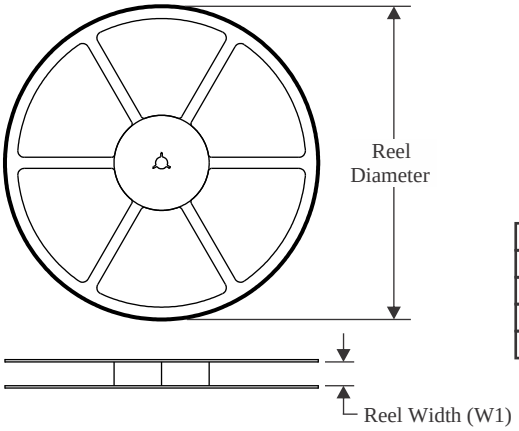

TAPE DIMENSIONS

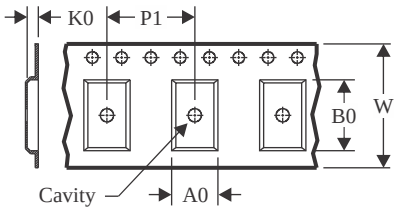

A0	Dimension designed to accommodate the component width
B0	Dimension designed to accommodate the component length
K0	Dimension designed to accommodate the component thickness
W	Overall width of the carrier tape
P1	Pitch between successive cavity centers

QUADRANT ASSIGNMENTS FOR PIN 1 ORIENTATION IN TAPE

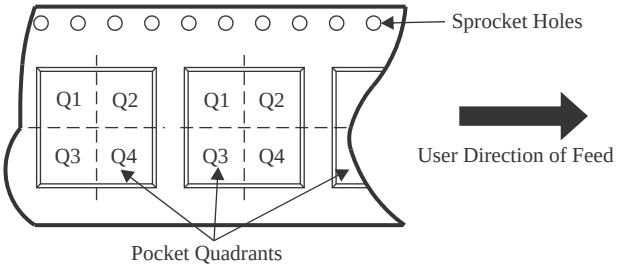

*All dimensions are nominal

Device	Package Type	Package Drawing	Pins	SPQ	Reel Diameter (mm)	Reel Width W1 (mm)	A0 (mm)	B0 (mm)	K0 (mm)	P1 (mm)	W (mm)	Pin1 Quadrant
TPS54719RTER	WQFN	RTE	16	3000	330.0	12.4	3.3	3.3	1.1	8.0	12.0	Q2
TPS54719RTET	WQFN	RTE	16	250	180.0	12.4	3.3	3.3	1.1	8.0	12.0	Q2

TAPE AND REEL BOX DIMENSIONS

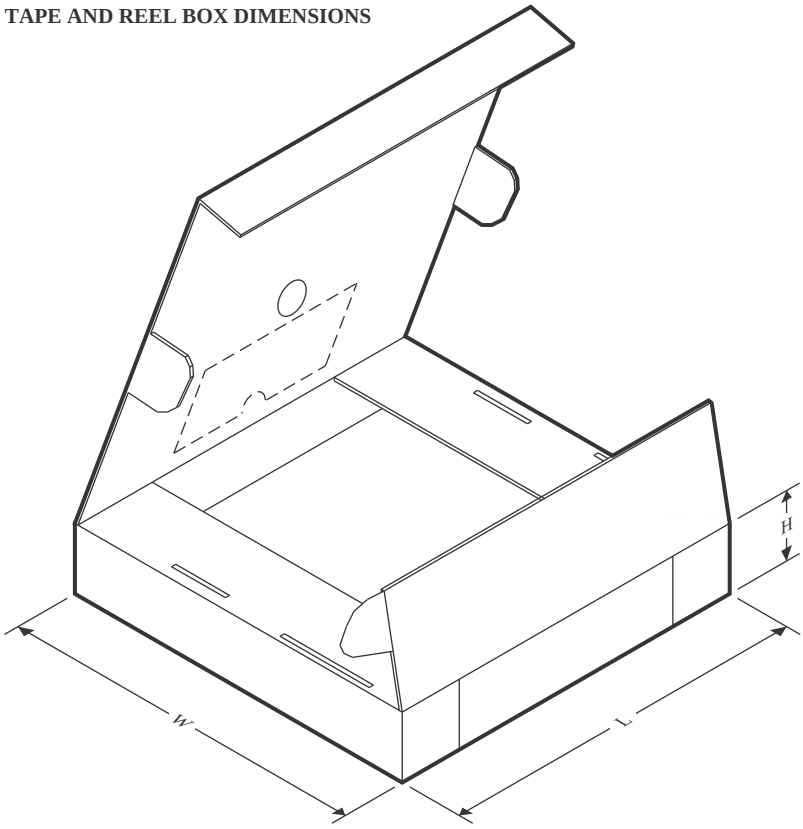

*All dimensions are nominal

Device	Package Type	Package Drawing	Pins	SPQ	Length (mm)	Width (mm)	Height (mm)
TPS54719RTER	WQFN	RTE	16	3000	346.0	346.0	33.0
TPS54719RTET	WQFN	RTE	16	250	182.0	182.0	20.0

GENERIC PACKAGE VIEW

RTE 16

WQFN - 0.8 mm max height

3 x 3, 0.5 mm pitch

PLASTIC QUAD FLATPACK - NO LEAD

This image is a representation of the package family, actual package may vary.
Refer to the product data sheet for package details.

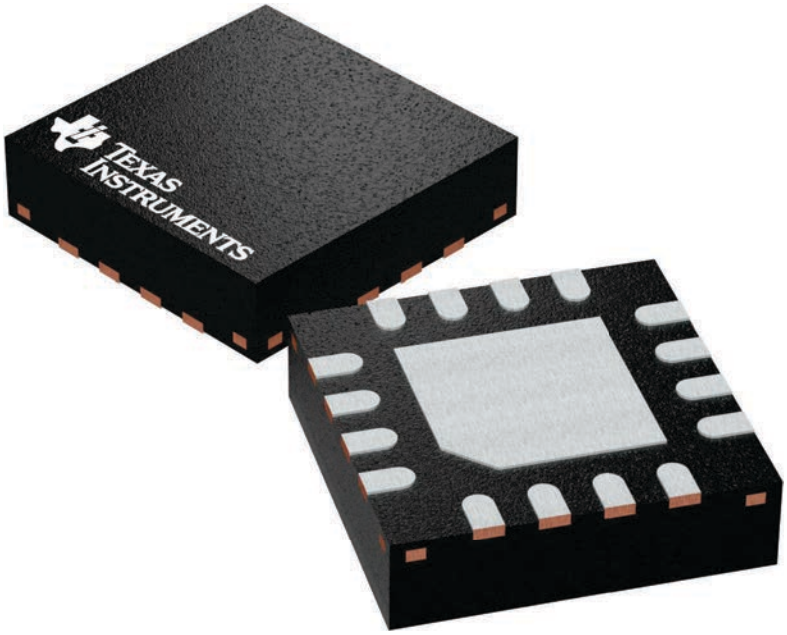

4225944/A

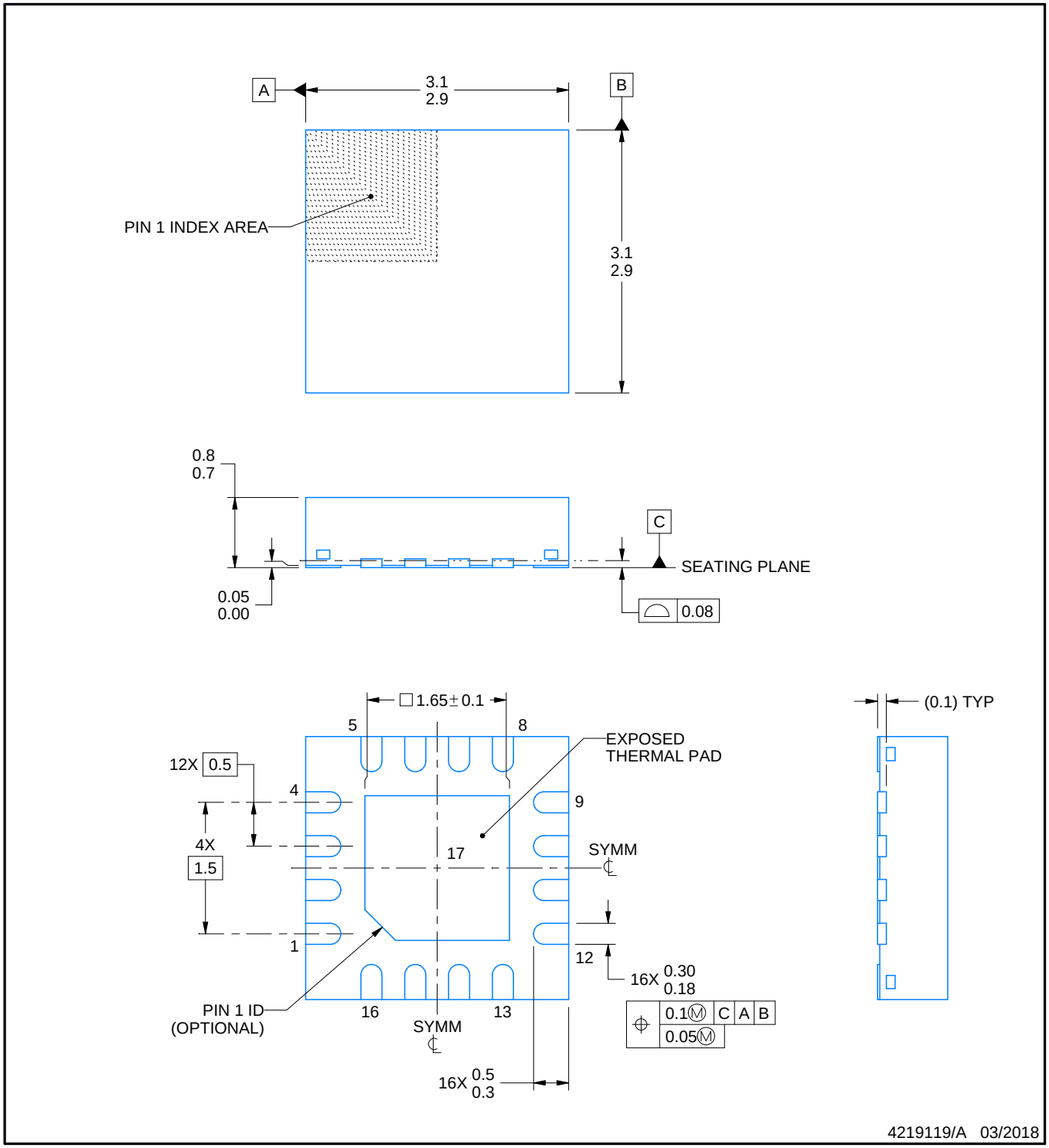

NOTES:

1. All linear dimensions are in millimeters. Any dimensions in parenthesis are for reference only. Dimensioning and tolerancing per ASME Y14.5M.
2. This drawing is subject to change without notice.
3. The package thermal pad must be soldered to the printed circuit board for thermal and mechanical performance.

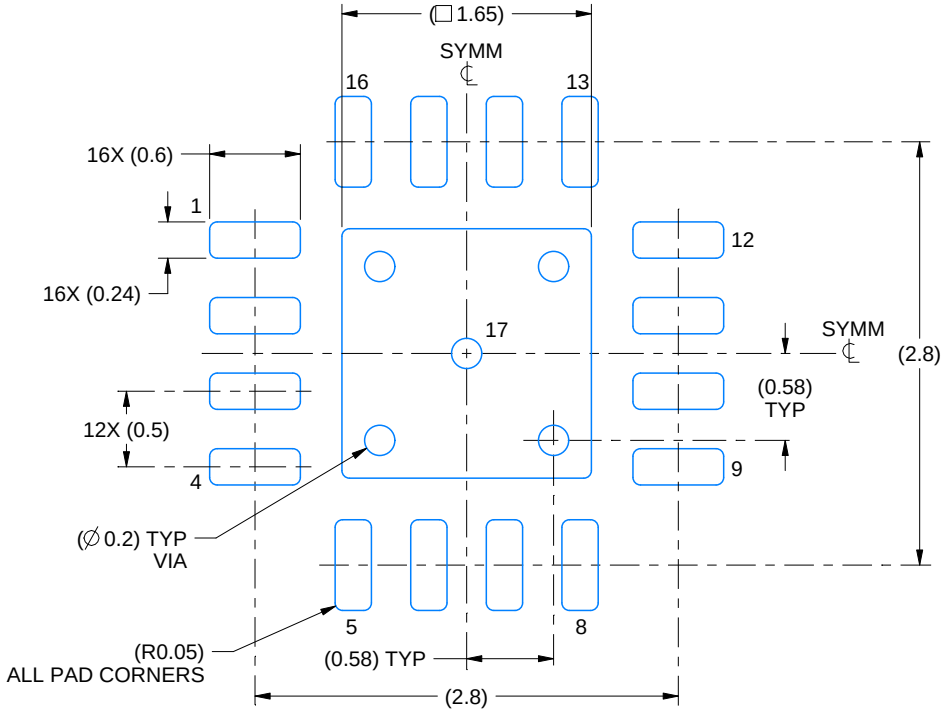

LAND PATTERN EXAMPLE
EXPOSED METAL SHOWN
SCALE:20X

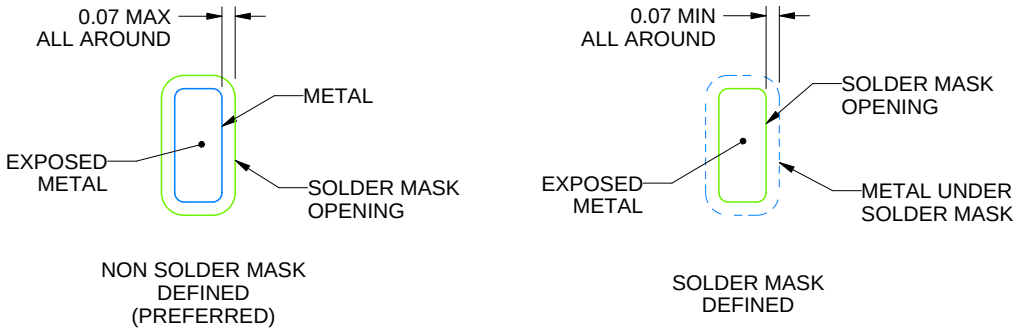

SOLDER MASK DETAILS

4219119/A 03/2018

NOTES: (continued)

4. This package is designed to be soldered to a thermal pad on the board. For more information, see Texas Instruments literature number SLUA271 (www.ti.com/lit/slua271).
5. Vias are optional depending on application, refer to device data sheet. If any vias are implemented, refer to their locations shown on this view. It is recommended that vias under paste be filled, plugged or tented.

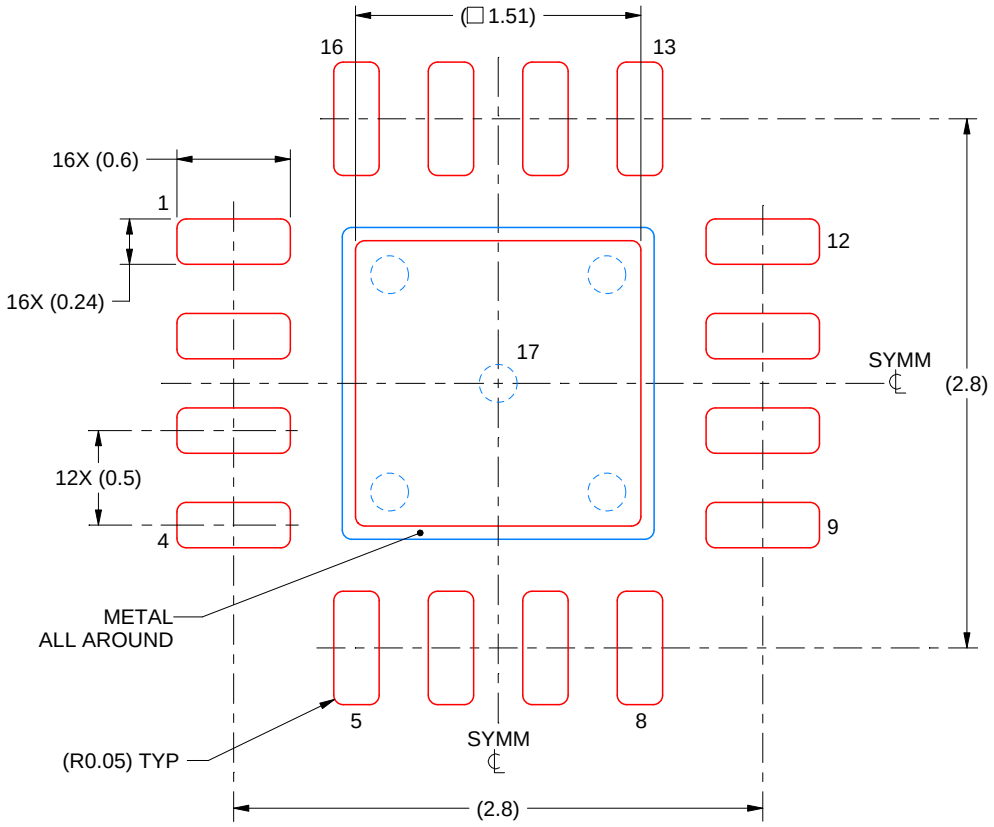

SOLDER PASTE EXAMPLE
BASED ON 0.125 mm THICK STENCIL

EXPOSED PAD 17:
84% PRINTED SOLDER COVERAGE BY AREA UNDER PACKAGE
SCALE:25X

4219119/A 03/2018

NOTES: (continued)

6. Laser cutting apertures with trapezoidal walls and rounded corners may offer better paste release. IPC-7525 may have alternate design recommendations.

IMPORTANT NOTICE AND DISCLAIMER

TI PROVIDES TECHNICAL AND RELIABILITY DATA (INCLUDING DATA SHEETS), DESIGN RESOURCES (INCLUDING REFERENCE DESIGNS), APPLICATION OR OTHER DESIGN ADVICE, WEB TOOLS, SAFETY INFORMATION, AND OTHER RESOURCES “AS IS” AND WITH ALL FAULTS, AND DISCLAIMS ALL WARRANTIES, EXPRESS AND IMPLIED, INCLUDING WITHOUT LIMITATION ANY IMPLIED WARRANTIES OF MERCHANTABILITY, FITNESS FOR A PARTICULAR PURPOSE OR NON-INFRINGEMENT OF THIRD PARTY INTELLECTUAL PROPERTY RIGHTS.

These resources are intended for skilled developers designing with TI products. You are solely responsible for (1) selecting the appropriate TI products for your application, (2) designing, validating and testing your application, and (3) ensuring your application meets applicable standards, and any other safety, security, regulatory or other requirements.

These resources are subject to change without notice. TI grants you permission to use these resources only for development of an application that uses the TI products described in the resource. Other reproduction and display of these resources is prohibited. No license is granted to any other TI intellectual property right or to any third party intellectual property right. TI disclaims responsibility for, and you will fully indemnify TI and its representatives against, any claims, damages, costs, losses, and liabilities arising out of your use of these resources.

TI’s products are provided subject to TI’s Terms of Sale or other applicable terms available either on ti.com or provided in conjunction with such TI products. TI’s provision of these resources does not expand or otherwise alter TI’s applicable warranties or warranty disclaimers for TI products.

TI objects to and rejects any additional or different terms you may have proposed.

Mailing Address: Texas Instruments, Post Office Box 655303, Dallas, Texas 75265
Copyright © 2025, Texas Instruments Incorporated