- **Fully Integrated V_{CC} and V_{pp} Switching for Dual-Slot PC Card™ Interface**
- **Compatible With Controllers From Cirrus, Ricoh, O_2Micro, Intel, and Texas Instruments**
- **3.3-V Low-Voltage Mode**
- **Meets PC Card Standards**
- **12-V Supply Can Be Disabled Except During 12-V Flash Programming**
- **Short Circuit and Thermal Protection**
- **30-Pin SSOP (DB) and 32-Pin TSSOP (DAP)**
- **Compatible With 3.3-V, 5-V and 12-V PC Cards**
- **Low $r_{DS(on)}$ (140-mΩ 5-V V_{CC} Switch; 110-mΩ 3.3-V V_{CC} Switch)**
- **Break-Before-Make Switching**

DB OR DF PACKAGE
(TOP VIEW)

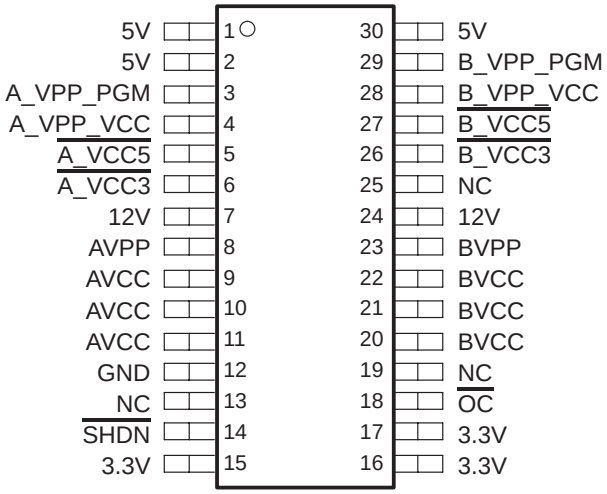

description

The TPS2205 PC Card power-interface switch provides an integrated power-management solution for two PC Cards. All of the discrete power MOSFETs, a logic section, current limiting, and thermal protection for PC Card control are combined on a single integrated circuit (IC), using the Texas Instruments LinBiCMOS™ process. The circuit allows the distribution of 3.3-V, 5-V, and/or 12-V card power, and is compatible with many PCMCIA controllers. The current-limiting feature eliminates the need for fuses, which reduces component count and improves reliability.

The TPS2205 is backward compatible with the TPS2201, except that there is no V_{DD} connection. Bias current is derived from either the 3.3-V input pin or the 5-V input pin. The TPS2205 also eliminates the APWR_GOOD and BPWR_GOOD pins of the TPS2201.

DAP PACKAGE
(TOP VIEW)

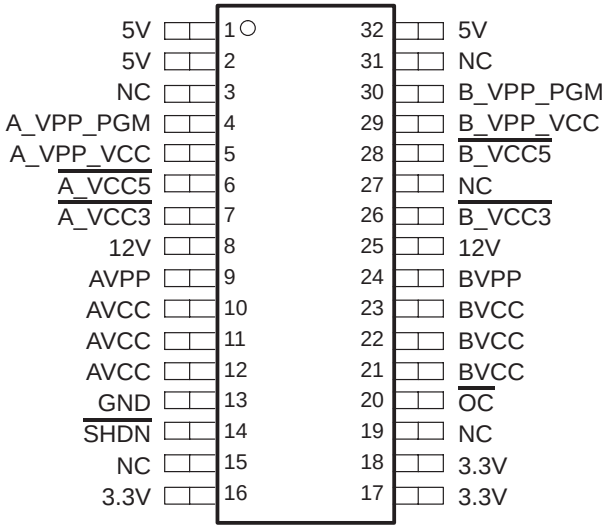

NC − No internal connection

The TPS2205 features a 3.3-V low-voltage mode that allows for 3.3-V switching without the need for 5 V. This facilitates low-power system designs such as sleep mode and pager mode where only 3.3 V is available.

End equipment for the TPS2205 includes notebook computers, desktop computers, personal digital assistants (PDAs), digital cameras, and bar-code scanners.

Please be aware that an important notice concerning availability, standard warranty, and use in critical applications of Texas Instruments semiconductor products and disclaimers thereto appears at the end of this data sheet.

LinBiCMOS is a trademark of Texas Instruments.
PC Card is a trademark of PCMCIA (Personal Computer Memory Card International Association).

PRODUCTION DATA information is current as of publication date. Products conform to specifications per the terms of Texas Instruments standard warranty. Production processing does not necessarily include testing of all parameters.

Copyright © 2001, Texas Instruments Incorporated

AVAILABLE OPTIONS

T_A	PACKAGED DEVICES			CHIP FORM (Y)
	PLASTIC SMALL OUTLINE (DB)	PLASTIC SMALL OUTLINE (DF)	TSSOP (DAP)	
−40°C to 85°C	TPS2205IDBR	TPS2205IDFR	TPS2205IDAPR	TPS2205Y

The DB, DF, and DAP packages are only available taped and reeled, indicated by the R suffix on the device type.

typical PC card power-distribution application

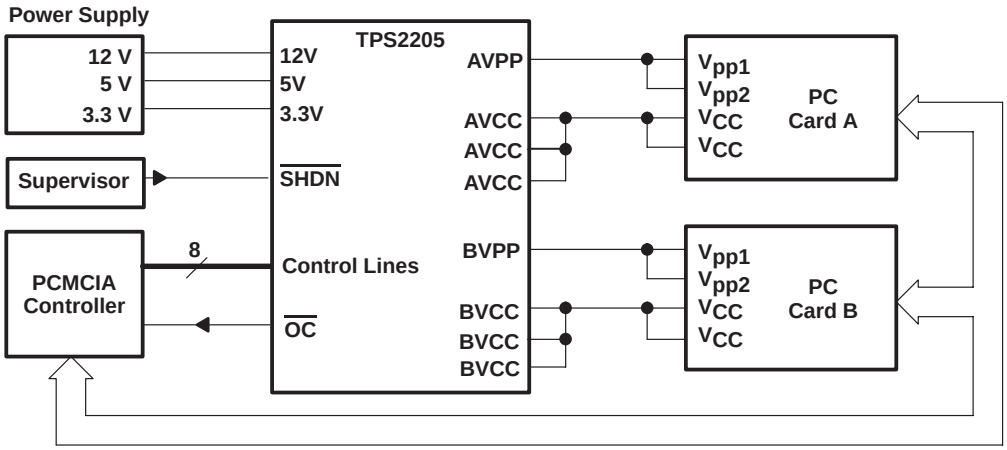

TPS2205Y chip information

This chip, when properly assembled, displays characteristics similar to those of the TPS2205. Thermal compression or ultrasonic bonding may be used on the doped-aluminum bonding pads. The chips may be mounted with conductive epoxy or a gold-silicon preform.

BONDING PAD ASSIGNMENTS

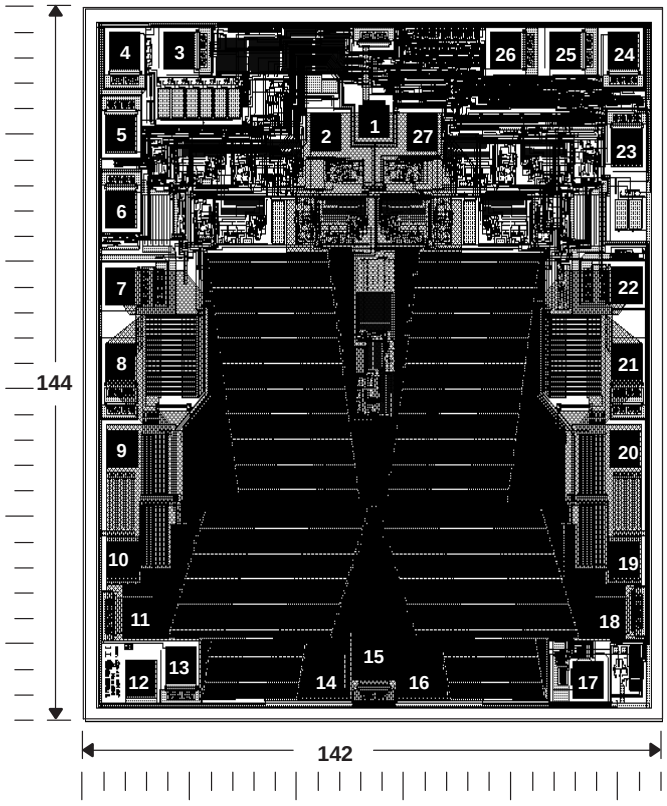

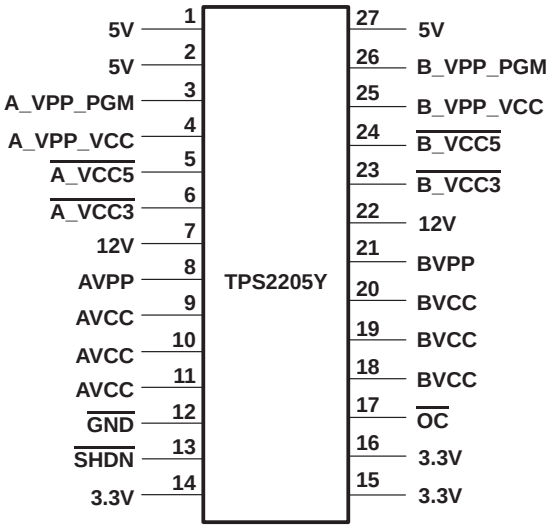

CHIP THICKNESS: 15 TYPICAL

BONDING PADS: 4 × 4 MINIMUM

T_J max = 150°C

TOLERANCES ARE ±10%.

ALL DIMENSIONS ARE IN MILS.

Terminal Functions

TERMINAL			I/O	DESCRIPTION
NAME	NO.			
	DB, DF	DAP		
$\overline{\text{A_VCC3}}$	6	7	I	Logic input that controls voltage on AVCC (see TPS2205 Control-Logic table)
$\overline{\text{A_VCC5}}$	5	6	I	Logic input that controls voltage on AVCC (see TPS2205 Control-Logic table)
A_VPP_PGM	3	4	I	Logic input that controls voltage on AVPP (see TPS2205 Control-Logic table)
A_VPP_VCC	4	5	I	Logic input that controls voltage on AVPP (see TPS2205 Control-Logic table)
AVCC	9, 10, 11	10, 11, 12	O	Switched output that delivers 0 V, 3.3 V, 5 V, or high impedance
AVPP	8	9	O	Switched output that delivers 0 V, 3.3 V, 5 V, 12 V, or high impedance
$\overline{\text{B_VCC3}}$	26	26	I	Logic input that controls voltage on BVCC (see TPS2205 Control-Logic table)
$\overline{\text{B_VCC5}}$	27	28	I	Logic input that controls voltage on BVCC (see TPS2205 Control-Logic table)
B_VPP_PGM	29	30	I	Logic input that controls voltage on BVPP (see TPS2205 Control-Logic table)
B_VPP_VCC	28	29	I	Logic input that controls voltage on BVPP (see TPS2205 Control-Logic table)
BVCC	20, 21, 22	21, 22, 23	O	Switched output that delivers 0 V, 3.3 V, 5 V, or high impedance
BVPP	23	24	O	Switched output that delivers 0 V, 3.3 V, 5 V, 12 V, or high impedance
$\overline{\text{SHDN}}$	14	14	I	Logic input that shuts down the TPS2205 and set all power outputs to high-impedance state
$\overline{\text{OC}}$	18	20	O	Logic-level overcurrent reporting output that goes low when an overcurrent condition exists
GND	12	13		Ground
3.3V	15, 16, 17	16, 17, 18	I	3.3-V V_{CC} in for card power
5V	1, 2, 30	1, 2, 32	I	5-V V_{CC} in for card power
12V	7, 24	8, 25	I	12-V VPP in for card power
NC	13, 19, 25	3, 15, 19, 27, 31	I	No internal connection

absolute maximum ratings over operating free-air temperature (unless otherwise noted)†

Input voltage range for card power: $V_{I(5V)}$ . . . . . −0.3 V to 7 V
$V_{I(3.3V)}$ . . . . . −0.3 V to 7 V
$V_{I(12V)}$ . . . . . −0.3 V to 14 V
Logic input voltage . . . . . −0.3 V to 7 V
Continuous total power dissipation . . . . . See Dissipation Rating Table
Output current (each card): $I_{O(xVCC)}$ . . . . . Internally limited
$I_{O(xVPP)}$ . . . . . Internally limited
Operating virtual junction temperature range, T_J . . . . . −40°C to 150°C
Operating free-air temperature range, T_A . . . . . −40°C to 85°C
Storage temperature range, T_{stg} . . . . . −55°C to 150°C
Lead temperature 1,6 mm (1/16 inch) from case for 10 seconds . . . . . 260°C

† Stresses beyond those listed under “absolute maximum ratings” may cause permanent damage to the device. These are stress ratings only, and functional operation of the device at these or any other conditions beyond those indicated under “recommended operating conditions” is not implied. Exposure to absolute-maximum-rated conditions for extended periods may affect device reliability.

DISSIPATION RATING TABLE

PACKAGE		$T_A \le 25°C$ POWER RATING	DERATING FACTOR‡ ABOVE $T_A = 25°C$	$T_A = 70°C$ POWER RATING	$T_A = 85°C$ POWER RATING
DB		1024 mW	8.2 mW/°C	655 mW	532 mW
DF		1158 mW	9.26 mW/°C	741 mW	602 mW
DAP	No backplane	1625 mW	13 mW/°C	1040 mW	845 mW
	Backplane§	6044 mW	48.36 mW/°C	3869 mW	3143 mW

‡ These devices are mounted on an FR4 board with no special thermal considerations.
§ 2-oz backplane with 2-oz traces; 5.2-mm × 11-mm thermal pad with 6-mil solder; 0.18-mm diameter vias in a 3×6 array.

recommended operating conditions

		MIN	MAX	UNIT
Input voltage range, V_I	$V_{I(5V)}$	0	5.25	V
	$V_{I(3.3V)}$	0	5.25	V
	$V_{I(12V)}$	0	13.5	V
Output current	$I_{O(xVCC)}$ at 25°C		1	A
	$I_{O(xVPP)}$ at 25°C		150	mA
Operating virtual junction temperature, T_J		−40	125	°C

electrical characteristics, $T_A = 25°C$, $V_{I(5V)} = 5$ V (unless otherwise noted)

dc characteristics

PARAMETER			TEST CONDITIONS	TPS2205 MIN	TPS2205 TYP	TPS2205 MAX	UNIT
	Switch resistances†	5 V to xVCC			103	140	mΩ
		3.3 V to xVCC	$V_{I(5V)} = 5$ V, $V_{I(3.3\ V)} = 3.3$ V		69	110	mΩ
		3.3 V to xVCC	$V_{I(5V)} = 0$, $V_{I(3.3V)} = 3.3$ V		96	180	mΩ
		5 V to xVPP				6	Ω
		3.3 V to xVPP				6	Ω
		12 V to xVPP				1	Ω
$V_{O(xVPP)}$	Clamp low voltage		I_{pp} at 10 mA			0.8	V
$V_{O(xVCC)}$	Clamp low voltage		I_{CC} at 10 mA			0.8	V
I_{lkg}	Leakage current	I_{pp} high-impedance state	$T_A = 25°C$		1	10	µA
			$T_A = 85°C$			50	µA
		I_{CC} high-impedance state	$T_A = 25°C$		1	10	µA
			$T_A = 85°C$			50	µA
I_I	Input current	$V_{I(5V)} = 5$ V	$V_{O(AVCC)} = V_{O(BVCC)} = 5$ V, $V_{O(AVPP)} = V_{O(BVPP)} = 12$ V		117	150	µA
		$V_{I(5V)} = 0$, $V_{I(3.3V)} = 3.3$ V	$V_{O(AVCC)} = V_{O(BVCC)} = 3.3$ V, $V_{O(AVPP)} = V_{O(BVPP)} = 0$		131	150	µA
		Shutdown mode	$V_{O(BVCC)} = V_{O(AVCC)} = V_{O(AVPP)} = V_{O(BVPP)} =$ Hi-Z			1	µA
I_{OS}	Short-circuit output-current limit	$I_{O(xVCC)}$	$T_J = 85°C$, Output powered up into a short to GND	1		2.2	A
		$I_{O(xVPP)}$		120		400	mA

† Pulse-testing techniques are used to maintain junction temperature close to ambient temperature; thermal effects must be taken into account separately.

electrical characteristics, T_A = 25°C, $V_{I(5V)}$ = 5 V (unless otherwise noted)

logic section

PARAMETER	TEST CONDITIONS		TPS2205 MIN	TPS2205 MAX	UNIT
Logic input current				1	µA
Logic input high level			2		V
Logic input low level				0.8	V
Logic output high level	$V_{I(5V)}$= 5 V,	I_O = 1mA	$V_{I(5V)}$−0.4		V
	$V_{I(5V)}$= 0 V, $V_{I(3.3V)}$ = 3.3 V	I_O = 1mA,	$V_{I(3.3V)}$−0.4		
Logic output low level	I_O = 1mA			0.4	V

switching characteristics†‡

PARAMETER		TEST CONDITIONS		TPS2205 MIN	TPS2205 TYP	TPS2205 MAX	UNIT
t_r	Output rise time	$V_{O(xVCC)}$			1.2		ms
		$V_{O(xVPP)}$			5		
t_f	Output fall time	$V_{O(xVCC)}$			10		
		$V_{O(xVPP)}$			14		
t_{pd}	Propagation delay (see Figure 1)	$V_{I(x_VPP_PGM)}$ to $V_{O(xVPP)}$	t_{on}		4.4		ms
			t_{off}		18		ms
		$V_{I(\overline{x_VCC5})}$ to xVCC (3.3 V), $V_{I(5V)}$ = 5 V	t_{on}		6.5		ms
			t_{off}		20		ms
		$V_{I(\overline{x_VCC5})}$ to xVCC (5 V)	t_{on}		5.7		ms
			t_{off}		25		ms
		$V_{I(\overline{x_VCC5})}$ to xVCC (3.3 V), $V_{I(5V)}$ = 0	t_{on}		6.6		ms
			t_{off}		21		ms

† Refer to Parameter Measurement Information
‡ Switching Characteristics are with C_L = 150 µF.

electrical characteristics, T_A = 25°C, $V_{I(5V)}$ = 5 V (unless otherwise noted)

dc characteristics

PARAMETER			TEST CONDITIONS	TPS2205Y MIN	TPS2205Y TYP	TPS2205Y MAX	UNIT
	Switch resistances§	5 V to xVCC			103		mΩ
		3.3 V to xVCC	$V_{I(5V)}$ = 5 V, $V_{I(3.3\ V)}$ = 3.3 V		69		mΩ
		3.3 V to xVCC	$V_{I(5V)}$ = 0, $V_{I(3.3V)}$ = 3.3 V		96		mΩ
		5 V to xVPP			4.74		Ω
		3.3 V to xVPP			4.74		Ω
		12 V to xVPP			0.724		Ω
$V_{O(xVPP)}$	Clamp low voltage		I_{pp} at 10 mA		0.275		V
$V_{O(xVCC)}$	Clamp low voltage		I_{CC} at 10 mA		0.275		V
I_{lkg}	Leakage current	I_{pp} High-impedance state	T_A = 25°C		1		µA
		I_{CC} High-impedance state	T_A = 25°C		1		µA
I_I	Input current	$V_{I(5V)}$ = 5 V	$V_{O(AVCC)}$ = $V_{O(BVCC)}$ = 5 V, $V_{O(AVPP)}$ = $V_{O(BVPP)}$ = 12 V		117		µA
		$V_{I(5V)}$ = 0, $V_{I(3.3V)}$ = 3.3 V	$V_{O(AVCC)}$ = $V_{O(BVCC)}$ = 3.3 V, $V_{O(AVPP)}$ = $V_{O(BVPP)}$ = 0		131		µA

§ Pulse-testing techniques are used to maintain junction temperature close to ambient temperature; thermal effects must be taken into account separately.

switching characteristics†‡

PARAMETER		TEST CONDITIONS		TPS2205Y MIN	TPS2205Y TYP	TPS2205Y MAX	UNIT
t_r	Output rise time	$V_{O(xVCC)}$			1.2		ms
		$V_{O(xVPP)}$			5		ms
t_f	Output fall time	$V_{O(xVCC)}$			10		ms
		$V_{O(xVPP)}$			14		ms
t_{pd}	Propagation delay (see Figure 1)	$V_{I(x_VPP_PGM)}$ to $V_{O(xVPP)}$	t_{on}		4.4		ms
			t_{off}		18		ms
		$V_{I(x_VCC5)}$ to xVCC (3.3 V), $V_{I(5V)}$ = 5 V	t_{on}		6.5		ms
			t_{off}		20		ms
		$V_{I(x_VCC5)}$ to xVCC (5 V)	t_{on}		5.7		ms
			t_{off}		25		ms
		$V_{I(x_VCC5)}$ to xVCC (3.3 V), $V_{I(5V)}$ = 0	t_{on}		6.6		ms
			t_{off}		21		ms

† Refer to Parameter Measurement Information
‡ Switching Characteristics are with C_L = 150 µF.

PARAMETER MEASUREMENT INFORMATION

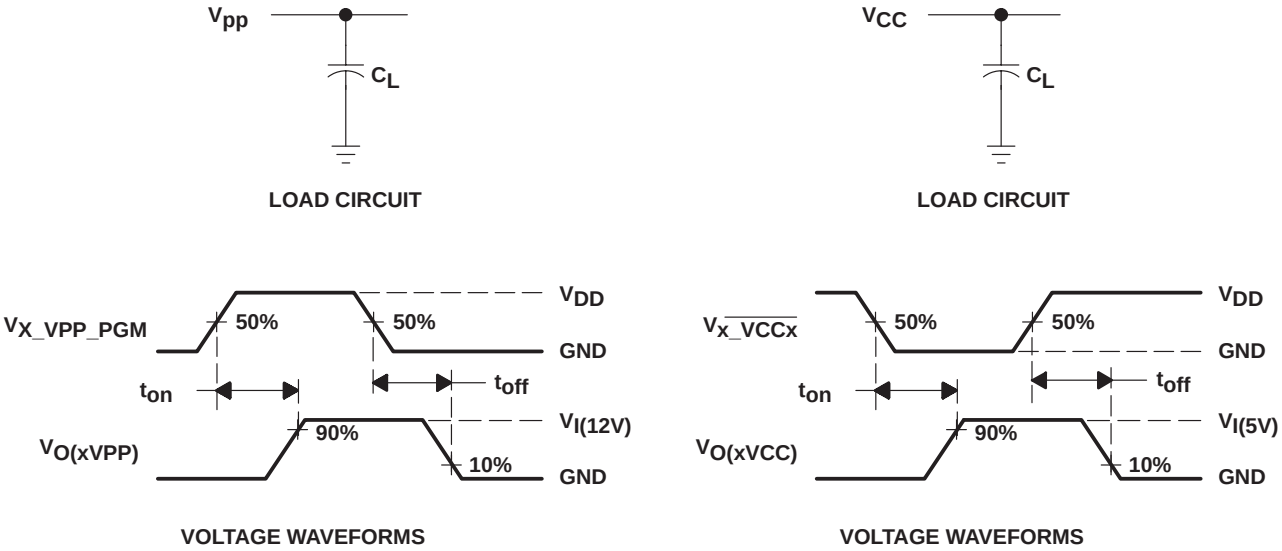

Figure 1. Test Circuits and Voltage Waveforms

Table of Timing Diagrams

	FIGURE
xVCC Propagation Delay and Rise Time With 1-µF Load, 3.3-V Switch, $V_{I(5V)}$ = 5 V	2
xVCC Propagation Delay and Fall Time With 1-µF Load, 3.3-V Switch, $V_{I(5V)}$ = 5 V	3
xVCC Propagation Delay and Rise Time With 150-µF Load, 3.3-V Switch, $V_{I(5V)}$ = 5 V	4
xVCC Propagation Delay and Fall Time With 150-µF Load, 3.3-V Switch, $V_{I(5V)}$ = 5 V	5
xVCC Propagation Delay and Rise Time With 1-µF Load, 3.3-V Switch, $V_{I(5V)}$ = 0	6
xVCC Propagation Delay and Fall Time With 1-µF Load, 3.3-V Switch, $V_{I(5V)}$ = 0	7
xVCC Propagation Delay and Rise Time With 150-µF Load, 3.3-V Switch, $V_{I(5V)}$ = 0	8
xVCC Propagation Delay and Fall Time With 150-µF Load, 3.3-V Switch, $V_{I(5V)}$ = 0	9
xVCC Propagation Delay and Rise Time With 1-µF Load, 5-V Switch	10
xVCC Propagation Delay and Fall Time With 1-µF Load, 5-V Switch	11
xVCC Propagation Delay and Rise Time With 150-µF Load, 5-V Switch	12
xVCC Propagation Delay and Fall Time With 150-µF Load, 5-V Switch	13
xVPP Propagation Delay and Rise Time With 1-µF Load, 12-V Switch	14
xVPP Propagation Delay and Fall Time With 1-µF Load, 12-V Switch	15
xVPP Propagation Delay and Rise Time With 150-µF Load, 12-V Switch	16
xVPP Propagation Delay and Fall Time With 150-µF Load, 12-V Switch	17

PARAMETER MEASUREMENT INFORMATION

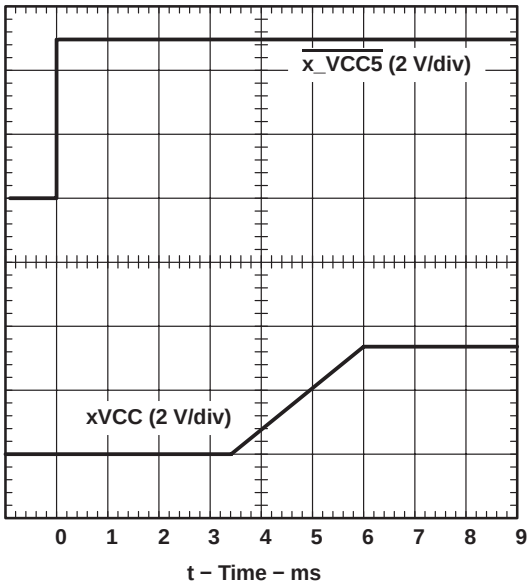

Figure 2. xVCC Propagation Delay and Rise Time With 1-μF Load, 3.3-V Switch, ($V_{I(5V)}$ = 5 V)

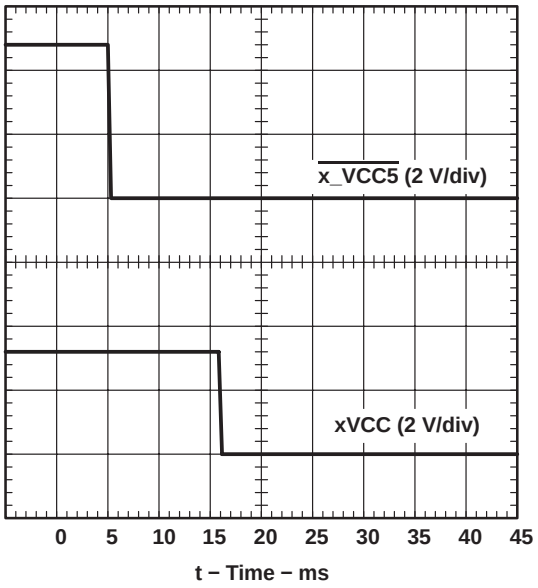

Figure 3. xVCC Propagation Delay and Fall Time With 1-μF Load, 3.3-V Switch, ($V_{I(5V)}$ = 5 V)

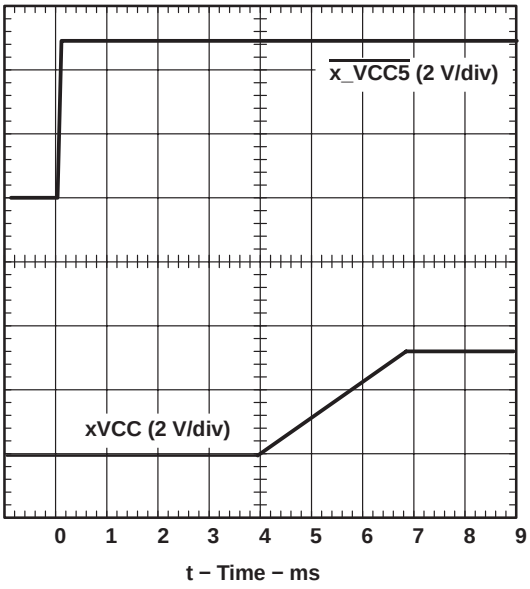

Figure 4. xVCC Propagation Delay and Rise Time With 150-μF Load, 3.3-V Switch, $V_{I(5V)}$ = 5 V

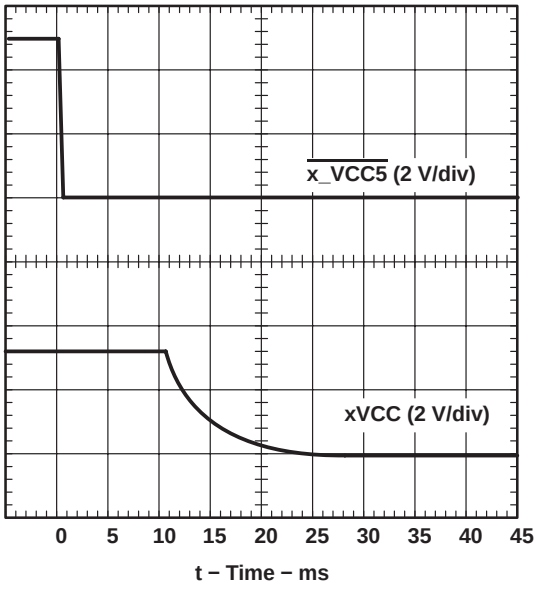

Figure 5. xVCC Propagation Delay and Fall Time With 150-μF Load, 3.3-V Switch, $V_{I(5V)}$ = 5 V

PARAMETER MEASUREMENT INFORMATION

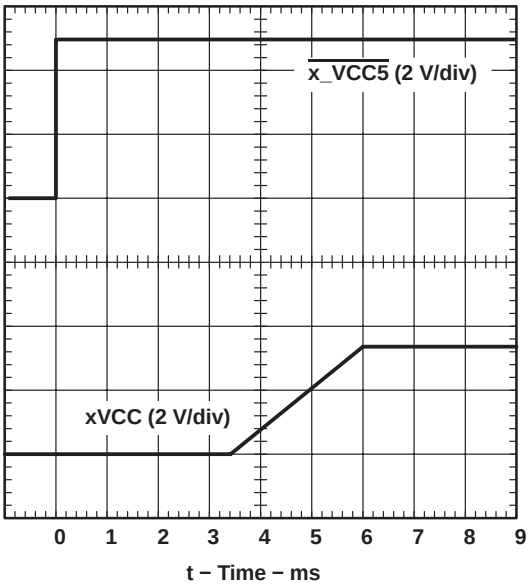

Figure 6. xVCC Propagation Delay and Rise Time With 1-μF Load, 3.3-V Switch, $V_{I(5V)} = 0$

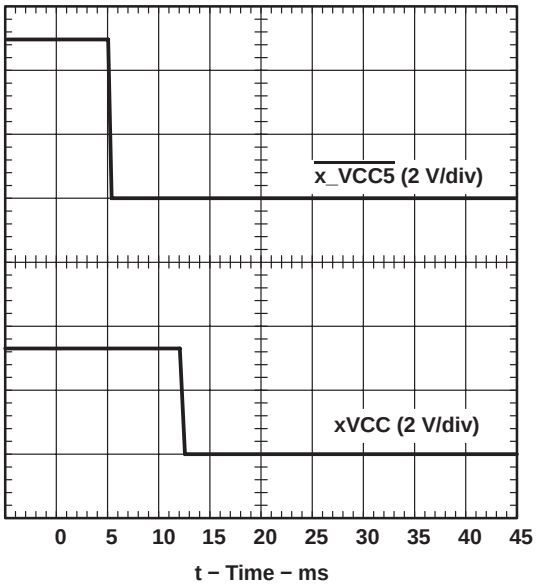

Figure 7. xVCC Propagation Delay and Fall Time With 1-μF Load, 3.3-V Switch, $V_{I(5V)} = 0$

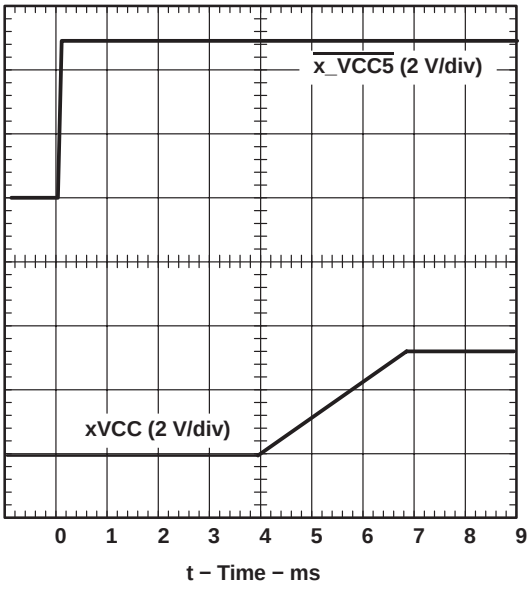

Figure 8. xVCC Propagation Delay and Rise Time With 150-μF Load, 3.3-V Switch, $V_{I(5V)} = 0$

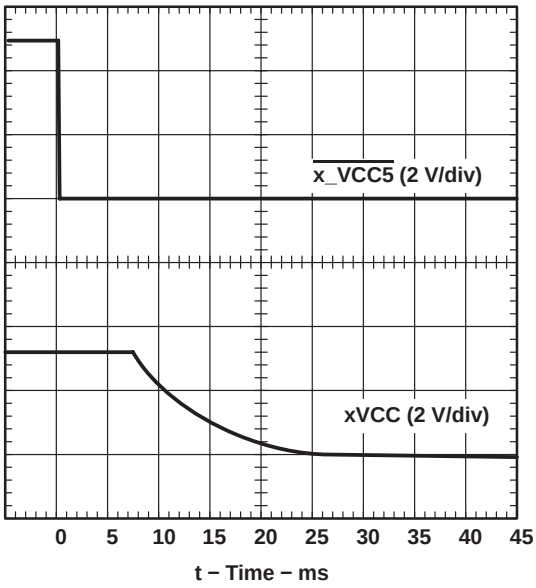

Figure 9. xVCC Propagation Delay and Fall Time With 150-μF Load, 3.3-V Switch, $V_{I(5V)} = 0$

PARAMETER MEASUREMENT INFORMATION

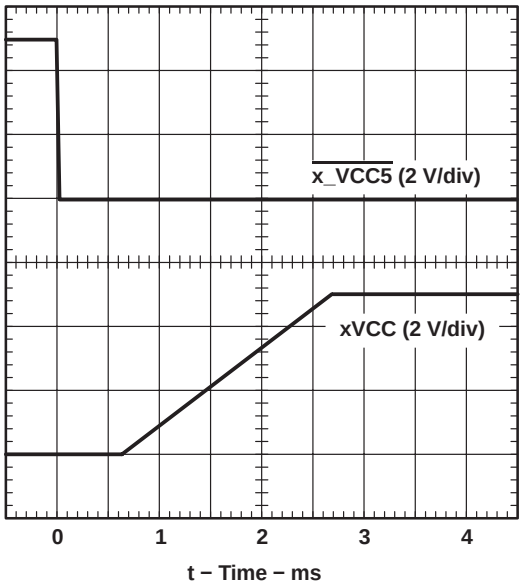

Figure 10. xVCC Propagation Delay and Rise Time With 1-μF Load, 5-V Switch

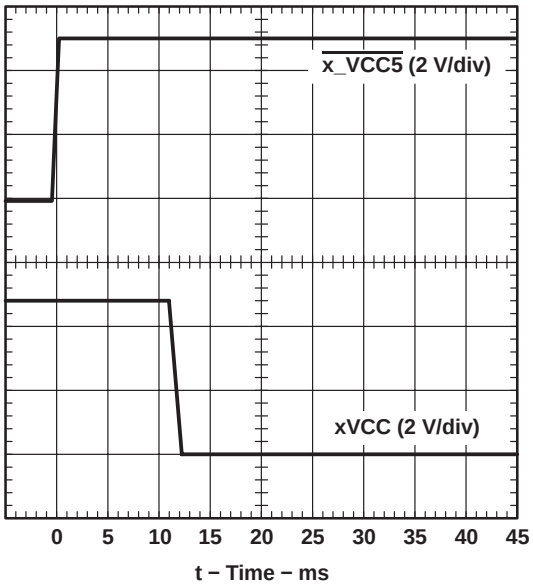

Figure 11. xVCC Propagation Delay and Fall Time With 1-μF Load, 5-V Switch

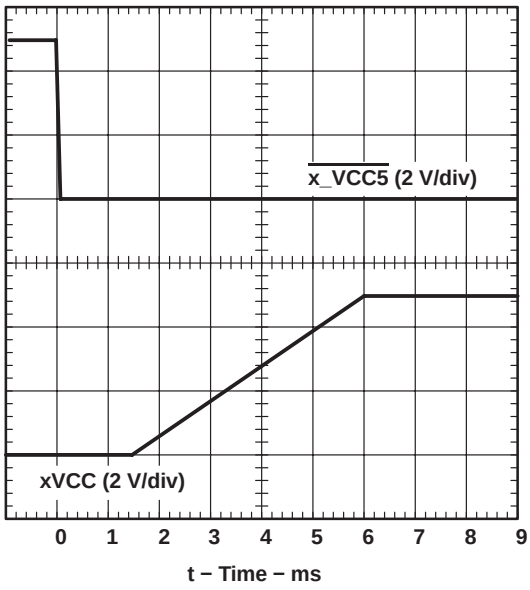

Figure 12. xVCC Propagation Delay and Rise Time With 150-μF Load, 5-V Switch

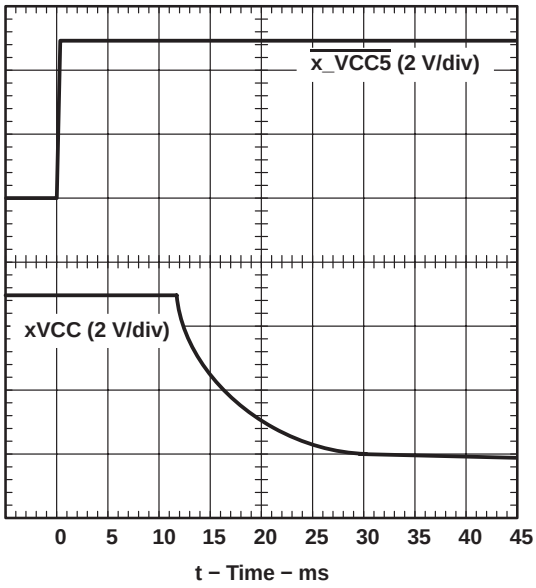

Figure 13. xVCC Propagation Delay and Fall Time With 150-μF Load, 5-V Switch

PARAMETER MEASUREMENT INFORMATION

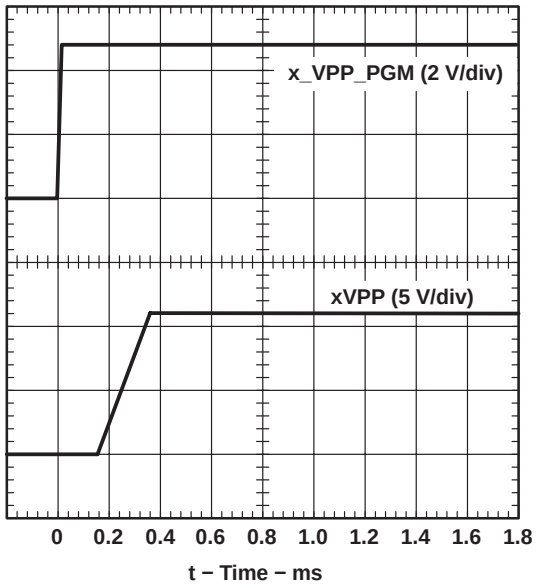

Figure 14. xVPP Propagation Delay and Rise Time With 1-μF Load, 12-V Switch

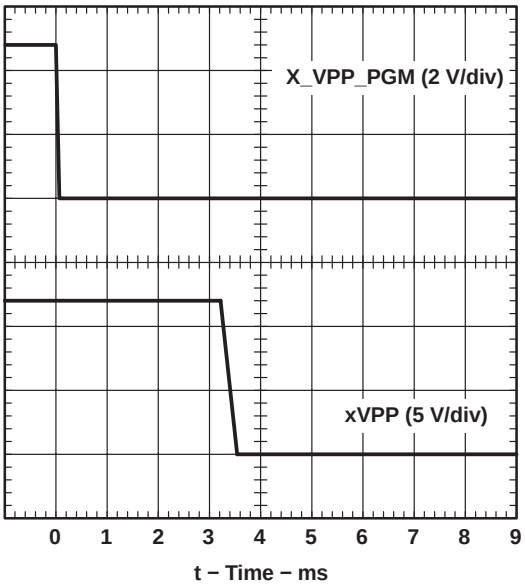

Figure 15. xVPP Propagation Delay and Fall Time With 1-μF Load, 12-V Switch

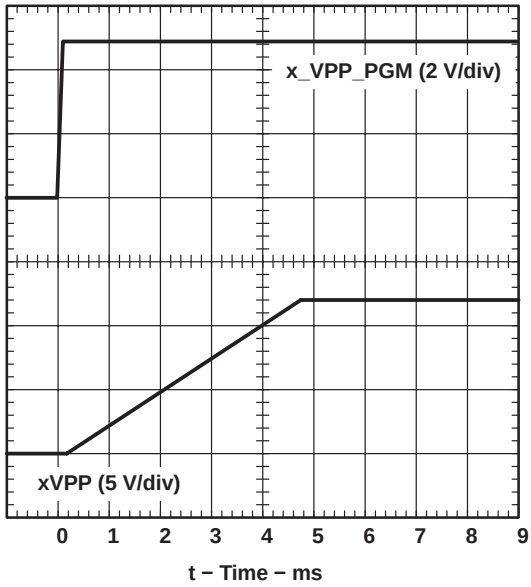

Figure 16. xVPP Propagation Delay and Rise Time With 150-μF Load, 12-V Switch

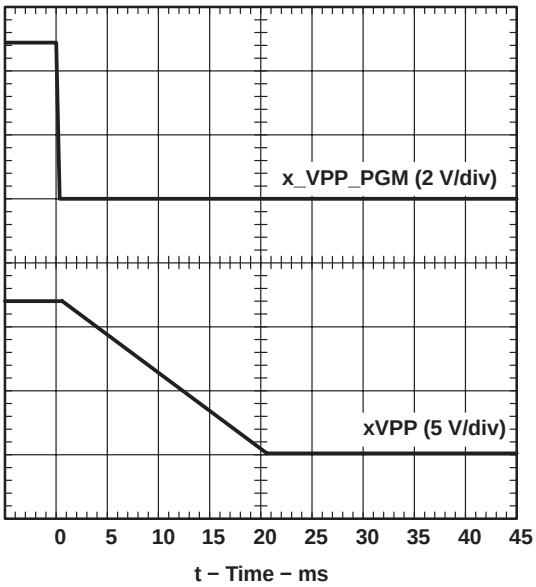

Figure 17. xVPP Propagation Delay and Fall Time With 150-μF Load, 12-V Switch

TYPICAL CHARACTERISTICS

Table of Graphs

			FIGURE
I_{DD}	Supply current	vs Junction temperature	18
I_{DD}	Supply current, $V_{I(5V)}$ = 0, $V_{I(12V)}$ =0,$V_{O(AVCC)}$ = $V_{O(BVCC)}$ = 3.3 V	vs Junction temperature	19
$r_{DS(on)}$	Static drain-source on-state resistance, 3.3-V switch, $V_{I(5V)}$ = 5 V	vs Junction temperature	20
$r_{DS(on)}$	Static drain-source on-state resistance, 3.3-V switch, $V_{I(5V)}$ = 0	vs Junction temperature	21
$r_{DS(on)}$	Static drain-source on-state resistance, 5-V switch	vs Junction temperature	22
$r_{DS(on)}$	Static drain-source on-state resistance, 12-V switch	vs Junction temperature	23
$V_{O(xVCC)}$	Output voltage, 5-V switch	vs Output current	24
$V_{O(xVCC)}$	Output voltage, 3.3-V switch	vs Output current	25
$V_{O(xVCC)}$	Output voltage, 3.3-V switch, $V_{I(5V)}$ = 0	vs Output current	26
$V_{O(xVPP)}$	Output voltage, 12-V V_{pp} switch	vs Output current	27
$I_{OS(xVCC)}$	Short-circuit current, 5-V switch	vs Junction temperature	28
$I_{OS(xVCC)}$	Short-circuit current, 3.3-V switch	vs Junction temperature	29
$I_{OS(xVPP)}$	Short-circuit current, 12-V switch	vs Junction temperature	30

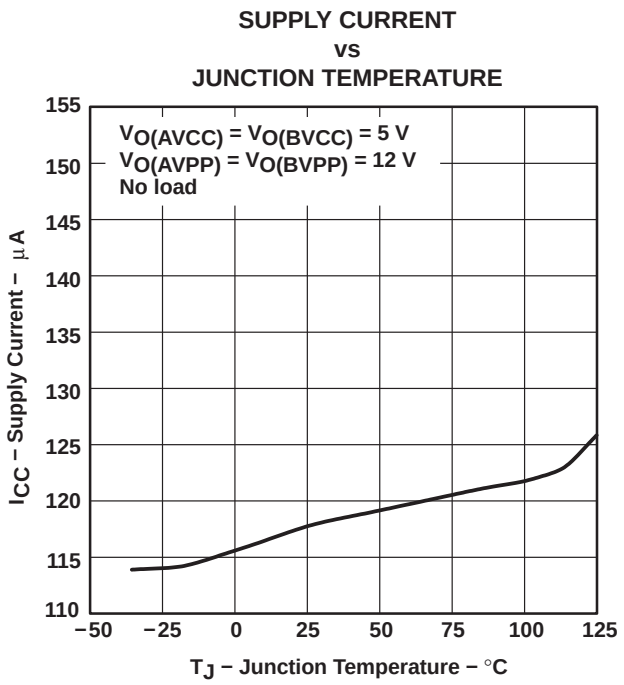

Figure 18

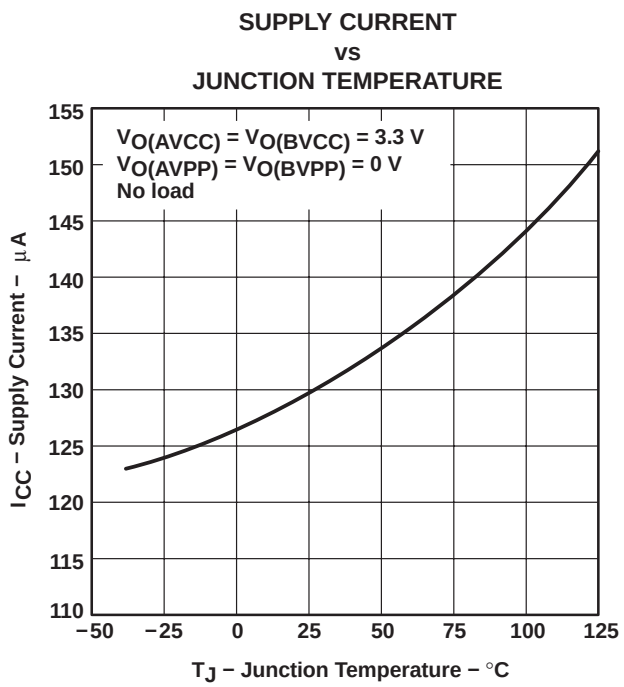

Figure 19

TYPICAL CHARACTERISTICS

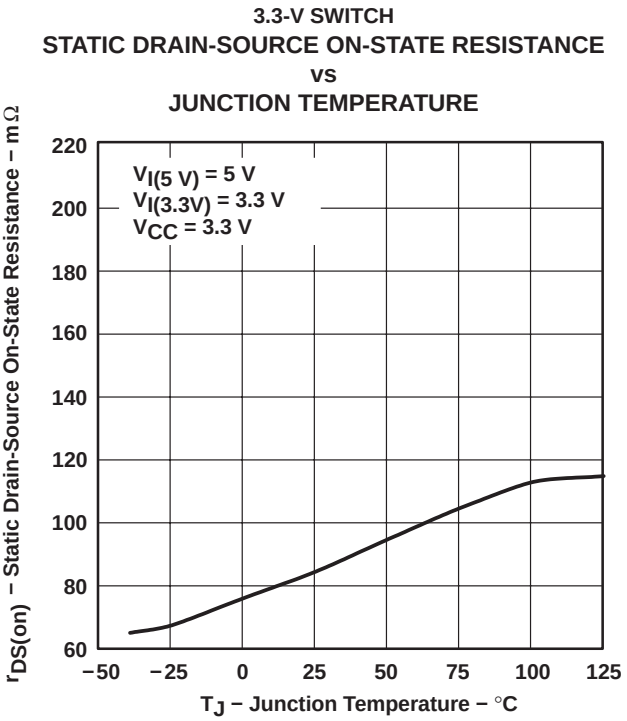

Figure 20

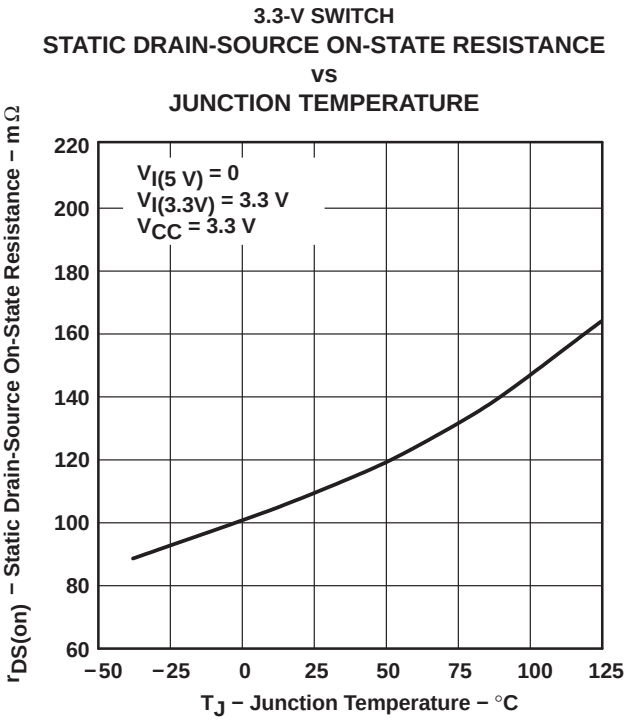

Figure 21

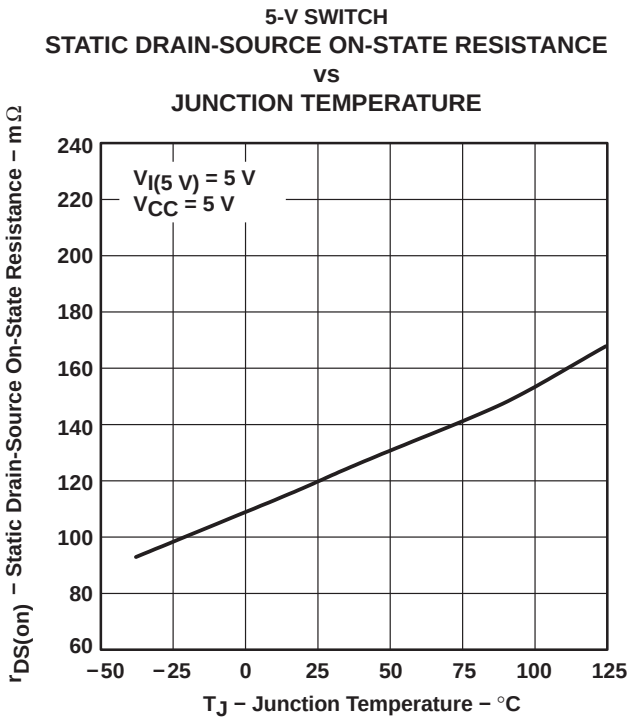

Figure 22

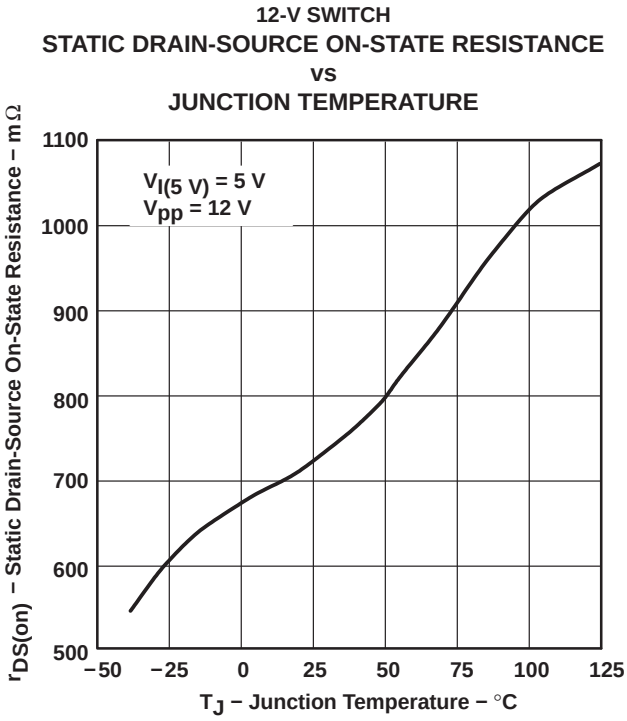

Figure 23

TYPICAL CHARACTERISTICS

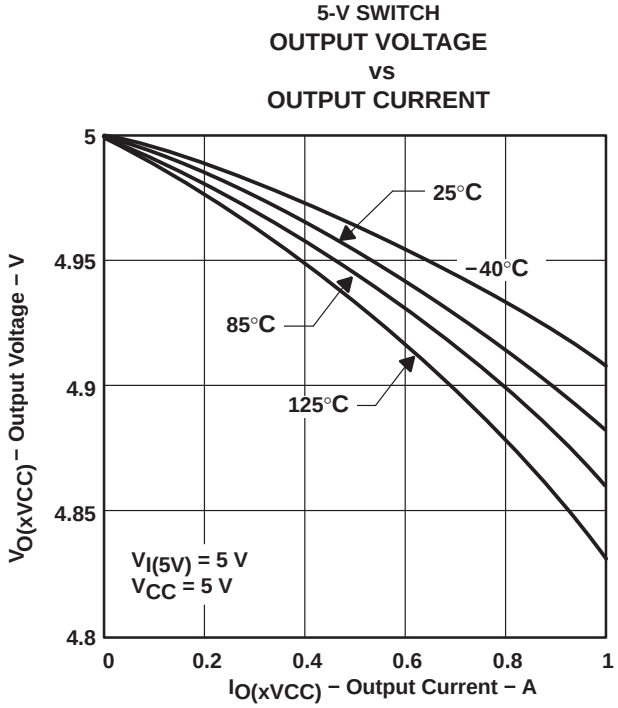

Figure 24

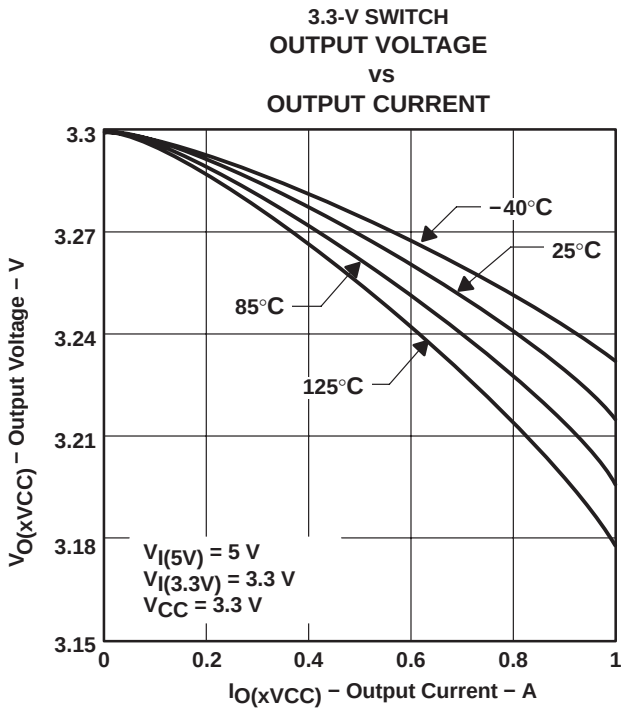

Figure 25

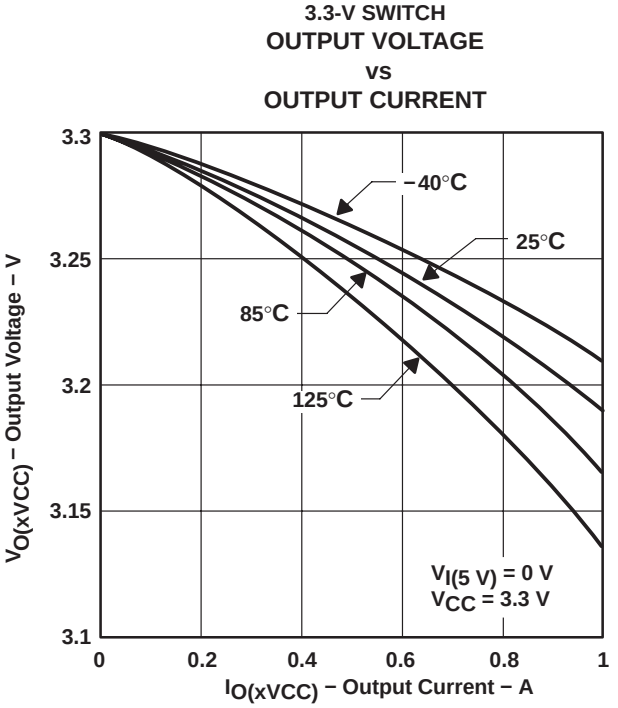

Figure 26

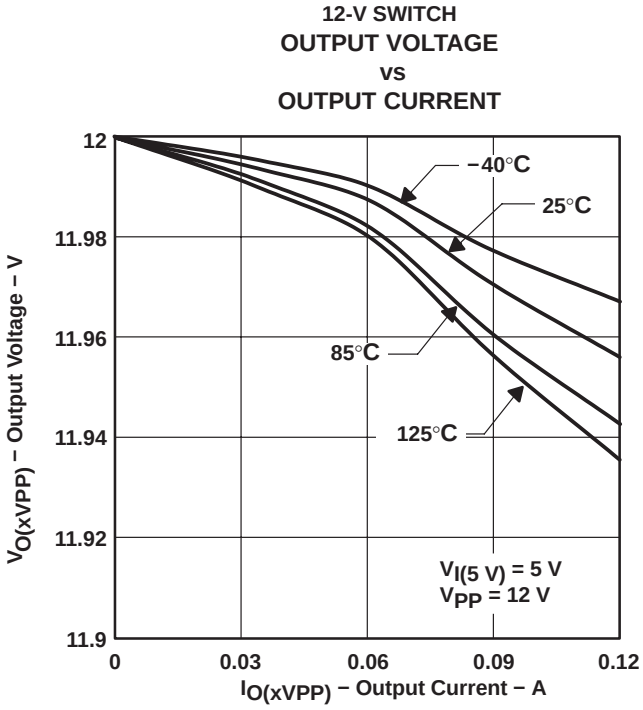

Figure 27

TYPICAL CHARACTERISTICS

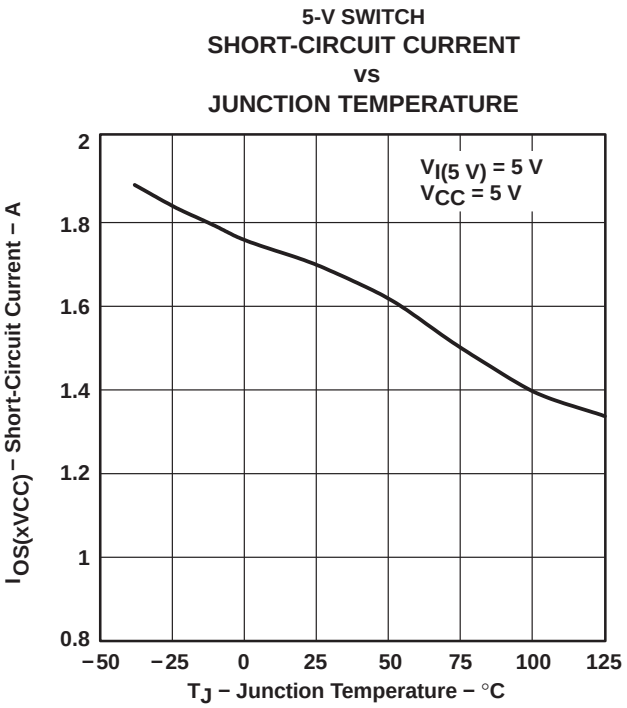

Figure 28

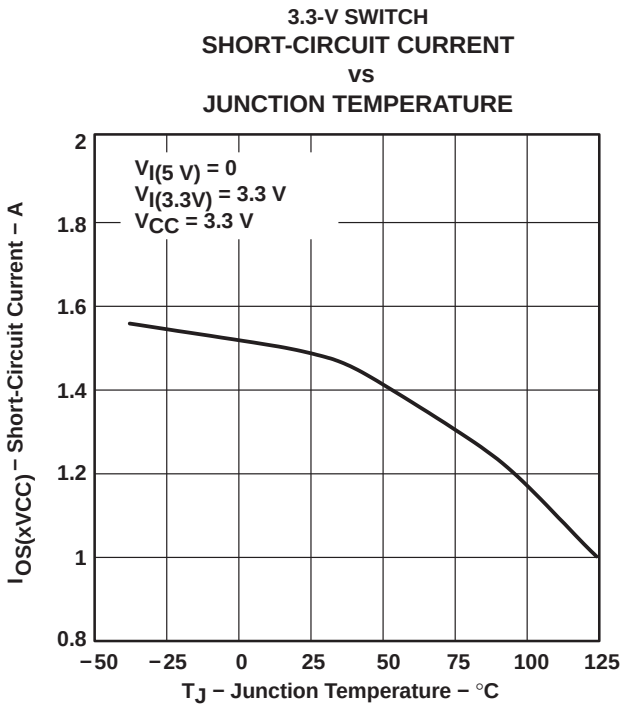

Figure 29

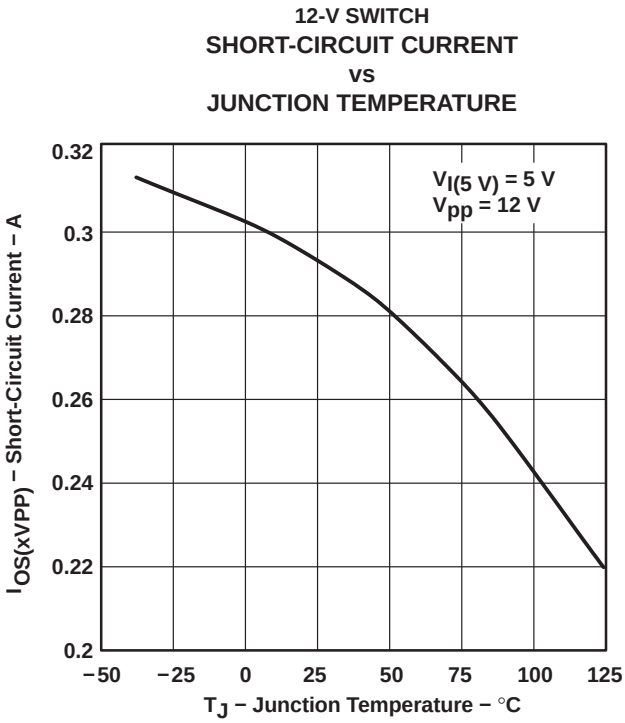

Figure 30

APPLICATION INFORMATION

overview

PC Cards were initially introduced as a means to add EEPROM (flash memory) to portable computers with limited on-board memory. The idea of add-in cards quickly took hold; modems, wireless LANs, global positioning satellite system (GPS), multimedia, and hard-disk versions were soon available. As the number of PC Card applications grew, the engineering community quickly recognized the need for a standard to ensure compatibility across platforms. To this end, the PCMCIA was established, comprised of members from leading computer, software, PC Card, and semiconductor manufacturers. One key goal was to realize the *plug-and-play* concept. Cards and hosts from different vendors should be compatible—able to communicate with one another transparently.

PC Card power specification

System compatibility also means power compatibility. The most current set of specifications (PC Card Standard) set forth by the PCMCIA committee states that power is to be transferred between the host and the card through eight of 68 terminals of the PC Card connector. This power interface consists of two V_{CC}, two V_{pp}, and four ground terminals. Multiple V_{CC} and ground terminals minimize connector-terminal and line resistance. The two V_{pp} terminals were originally specified as separate signals, but are commonly tied together in the host to form a single node to minimize voltage losses. Card primary power is supplied through the V_{CC} terminals; flash-memory programming and erase voltage is supplied through the V_{pp} terminals.

designing for voltage regulation

The current PCMCIA specification for output-voltage regulation ($V_{O(reg)}$) of the 5-V output is 5% (250 mV). In a typical PC power-system design, the power supply has an output-voltage regulation ($V_{PS(reg)}$) of 2% (100 mV). Also, a voltage drop from the power supply to the PC Card will result from resistive losses (V_{PCB}) in the PCB traces and the PCMCIA connector. A typical design would limit the total of these resistive losses to less than 1% (50 mV) of the output voltage. Therefore, the allowable voltage drop (V_{DS}) for the TPS2205 would be the PCMCIA voltage regulation less the power supply regulation and less the PCB and connector resistive drops:

$$V_{DS} = V_{O(reg)} - V_{PS(reg)} - V_{PCB}$$

Typically, this would leave 100 mV for the allowable voltage drop across the TPS2205. The voltage drop is the output current multiplied by the switch resistance of the TPS2205. Therefore, the maximum output current that can be delivered to the PC Card in regulation is the allowable voltage drop across the TPS2205 divided by the output switch resistance.

$$I_O max = \frac{V_{DS}}{r_{DS(on)}}$$

The xVCC outputs have been designed to deliver 700 mA at 5 V within regulation over the operating temperature range. Current proposals for the PCMCIA specifications are to limit the power dissipated in the PCMCIA slot to 3 W. With an input voltage of 5 V, 700 mA continous is the maximum current that can be delivered to the PC Card. The TPS2205 is capable of delivering up to 1 A continuously, but during worst-case conditions the output may not be within regulation. This is generally acceptable because the majority of PC Cards require less than 700 mA continuous. Some cards require higher peak currents (disk drives during initial platter spin-up), but it is generally acceptable for small voltage sags to occur during these peak currents.

The xVCC outputs have been designed to deliver 1 A continuously at 3.3 V within regulation over the operating temperature range. The PCMCIA specification for output voltage regulation of the 3.3-V output is 300 mV. Using the voltage drop percentages (2%) for power supply regulation and PCB resistive loss (1%), the allowable voltage drop for the 3.3 V switch is 200 mV.

The xVPP outputs have been designed to deliver 150 mA continuously at 12 V.

APPLICATION INFORMATION

overcurrent and overtemperature protection

PC Cards are inherently subject to damage that can result from mishandling. Host systems require protection against short-circuited cards that could lead to power supply or PCB-trace damage. Even systems sufficiently robust to withstand a short circuit would still undergo rapid battery discharge into the damaged PC Card, resulting in the rather sudden and unacceptable loss of system power. Most hosts include fuses for protection. The reliability of fused systems is poor, as blown fuses require troubleshooting and repair, usually by the manufacturer.

The TPS2205 takes a two-pronged approach to overcurrent protection. First, instead of fuses, sense FETs monitor each of the power outputs. Excessive current generates an error signal that linearly limits the output current, preventing host damage or failure. Sense FETs, unlike sense resistors or polyfuses, have an advantage in that they do not add to the series resistance of the switch and thus produce no additional voltage losses. Second, when an overcurrent condition is detected, the TPS2205 asserts a signal at $\overline{OC}$ that can be monitored by the microprocessor to initiate diagnostics and/or send the user a warning message. In the event that an overcurrent condition persists, causing the IC to exceed its maximum junction temperature, thermal-protection circuitry activates, shutting down all power outputs until the device cools to within a safe operating region.

12-V supply not required

Most PC Card switches use the externally supplied 12-V V_{pp} power for switch-gate drive and other chip functions, which requires that power be present at all times. The TPS2205 offers considerable power savings by using an internal charge pump to generate the required higher voltages from the 5-V or 3.3-V input; therefore, the external 12-V supply can be disabled except when needed for flash-memory functions, thereby extending battery lifetime. Do not ground the 12-V inputs when the 12-V input is not used. Additional power savings are realized by the TPS2205 during a software shutdown in which quiescent current drops to a maximum of 1 µA.

backward compatibility and 3.3-V low-voltage mode

The TPS2205 is backward compatible with the TPS2201, with the following considerations. Pin 25 (V_{DD} on TPS2201) is a no connect because bias current is derived from either the 3.3-V input pin or the 5-V input pin. Also, the TPS2205 does not have the APWR_GOOD or BPWR_GOOD VPP reporting outputs. These are left as no connects.

The TPS2205 operates in 3.3-V low-voltage mode when 3.3 V is the only available input voltage ($V_{I(5V)}$=0). This allows host and PC Cards to be operated in low-power 3.3-V-only modes such as sleep modes or pager modes. Note that in this operation mode, the TPS2205 derives its bias current from the 3.3-V input pin and only 3.3 V can be delivered to the PC Card. The 3.3-V switch resistance will be increased, but the added switch resistance should not be critical, because only a small amount of current is delivered in this mode. If 6% (198 mV) is allowed for the 3.3-V switch voltage drop, a 500-mΩ switch could deliver over 350 mA to the PC Card.

voltage-transitioning requirement

PC Cards, like portables, are migrating from 5 V to 3.3 V to minimize power consumption, optimize board space, and increase logic speeds. The TPS2205 is designed to meet all combinations of power delivery as currently defined in the PCMCIA standard. The latest protocol accommodates mixed 3.3-V/5-V systems by first powering the card with 5 V, then polling it to determine its 3.3-V compatibility. The PCMCIA specification requires that the capacitors on 3.3-V-compatible cards be discharged to below 0.8 V before applying 3.3-V power. This ensures that sensitive 3.3-V circuitry is not subjected to any residual 5-V charge and functions as a power reset. The TPS2205 offers a selectable V_{CC} and V_{pp} ground state, in accordance with PCMCIA 3.3-V/5-V switching specifications, to fully discharge the card capacitors while switching between V_{CC} voltages.

APPLICATION INFORMATION

output ground switches

Several PCMCIA power-distribution switches on the market do not have an active-grounding FET switch. These devices do not meet the PC Card specification requiring a discharge of V_{CC} within 100 ms. PC Card resistance can not be relied on to provide a discharge path for voltages stored on PC Card capacitance because of possible high-impedance isolation by power-management schemes. A method commonly shown to alleviate this problem is to add to the switch output an external 100-kΩ resistor in parallel with the PC Card. Considering that this is the only discharge path to ground, a timing analysis shows that the RC time constant delays the required discharge time to more than 2 seconds. The only way to ensure timing compatibility with PC Card standards is to use a power-distribution switch that has an internal ground switch, like that of the TPS22xx family, or add an external ground FET to each of the output lines with the control logic necessary to select it.

In summary, the TPS2205 is a complete single-chip dual-slot PC Card power interface. It meets all currently defined PCMCIA specifications for power delivery in 5-V, 3.3-V, and mixed systems, and offers a serial control interface. The TPS2205 offers functionality, power savings, overcurrent and thermal protection, and fault reporting in one 30-pin SSOP surface-mount package, for maximum value added to new portable designs.

power-supply considerations

The TPS2205 has multiple pins for each of its 3.3-V, 5-V, and 12-V power inputs and for the switched V_{CC} outputs. Any individual pin can conduct the rated input or output current. Unless all pins are connected in parallel, the series resistance is significantly higher than that specified, resulting in increased voltage drops and lost power. Both 12-V inputs must be connected for proper V_{pp} switching; it is recommended that all input and output power pins be paralleled for optimum operation.

Although the TPS2205 is fairly immune to power input fluctuations and noise, it is generally considered good design practice to bypass power supplies, typically with a 1-µF electrolytic or tantalum capacitor paralleled by a 0.047-µF to 0.1-µF ceramic capacitor. It is strongly recommended that the switched V_{CC} and V_{pp} outputs be bypassed with a 0.1-µF or larger capacitor; doing so improves the immunity of the TPS2205 to electrostatic discharge (ESD). Care should be taken to minimize the inductance of PCB traces between the TPS2205 and the load. High switching currents can produce large negative-voltage transients, which forward biases substrate diodes, resulting in unpredictable performance. Similary, no pin should be taken below −0.3 V.

overcurrent and thermal protection

The TPS2205 uses sense FETs to check for overcurrent conditions in each of the V_{CC} and V_{pp} outputs. Unlike sense resistors or polyfuses, these FETs do not add to the series resistance of the switch; therefore, voltage and power losses are reduced. Overcurrent sensing is applied to each output separately. When an overcurrent condition is detected, only the power output affected is limited; all other power outputs continue to function normally. The $\overline{OC}$ indicator, normally a logic high, is a logic low when any overcurrent condition is detected, providing for initiation of system diagnostics and/or sending a warning message to the user.

During power up, the TPS2205 controls the rise time of the V_{CC} and V_{pp} outputs and limits the current into a faulty card or connector. If a short circuit is applied after power is established (e.g., hot insertion of a bad card), current is initially limited only by the impedance between the short and the power supply. In extreme cases, as much as 10 A to 15 A may flow into the short before the current limiting of the TPS2205 engages. If the V_{CC} or V_{pp} outputs are driven below ground, the TPS2205 may latch nondestructively in an off state. Cycling power will reestablish normal operation.

Overcurrent limiting for the V_{CC} outputs is designed to activate if powered up into a short in the range of 1 A to 2.2 A, typically at about 1.6 A. The V_{pp} outputs limit from 120 mA to 400 mA, typically around 280 mA. The protection circuitry acts by linearly limiting the current passing through the switch rather than initiating a full shutdown of the supply. Shutdown occurs only during thermal limiting.

APPLICATION INFORMATION

overcurrent and thermal protection (continued)

Thermal limiting prevents destruction of the IC from overheating if the package power-dissipation ratings are exceeded. Thermal limiting disables all power outputs (both A and B slots) until the device has cooled.

calculating junction temperature

The switch resistance, $r_{DS(on)}$, is dependent on the junction temperature, T_J, of the die. The junction temperature is dependent on both $r_{DS(on)}$ and the current through the switch. To calculate T_J, first find $r_{DS(on)}$ from Figures 20, 21, 22, and 23 using an initial temperature estimate about 50°C above ambient. Then calculate the power dissipation for each switch, using the formula:

$$P_D = r_{DS(on)} \times I^2$$

Next, sum the power dissipation and calculate the junction temperature:

$$T_J = \left(\Sigma P_D \times R_{\theta JA}\right) + T_A,\ R_{\theta JA} = 108\ ^\circ C/W$$

Compare the calculated junction temperature with the initial temperature estimate. If the temperatures are not within a few degrees of each other, recalculate using the calculated temperature as the initial estimate.

logic input and outputs

The TPS2205 was designed to be compatible with most popular PCMCIA controllers and current PCMCIA and JEIDA standards. However, some controllers require slightly counterintuitive connections to achieve desired output states. The TPS2205 control logic inputs $\overline{A_VCC3}$, $\overline{A_VCC5}$, $\overline{B_VCC3}$ and $\overline{B_VCC5}$ are defined active low (see Figure 31 and control-logic table). As such, they are directly compatible with the logic outputs of the Cirrus Logic CL-PD6720 controller.

The shutdown input ($\overline{SHDN}$) of the TPS2205, when held at a logic low, places all V_{CC} and V_{pp} outputs in a high-impedance state and reduces chip quiescent current to 1 μA to conserve battery power.

An overcurrent output ($\overline{OC}$) is provided to indicate an overcurrent condition in any of the V_{CC} or V_{pp} supplies (see discussion above).

APPLICATION INFORMATION

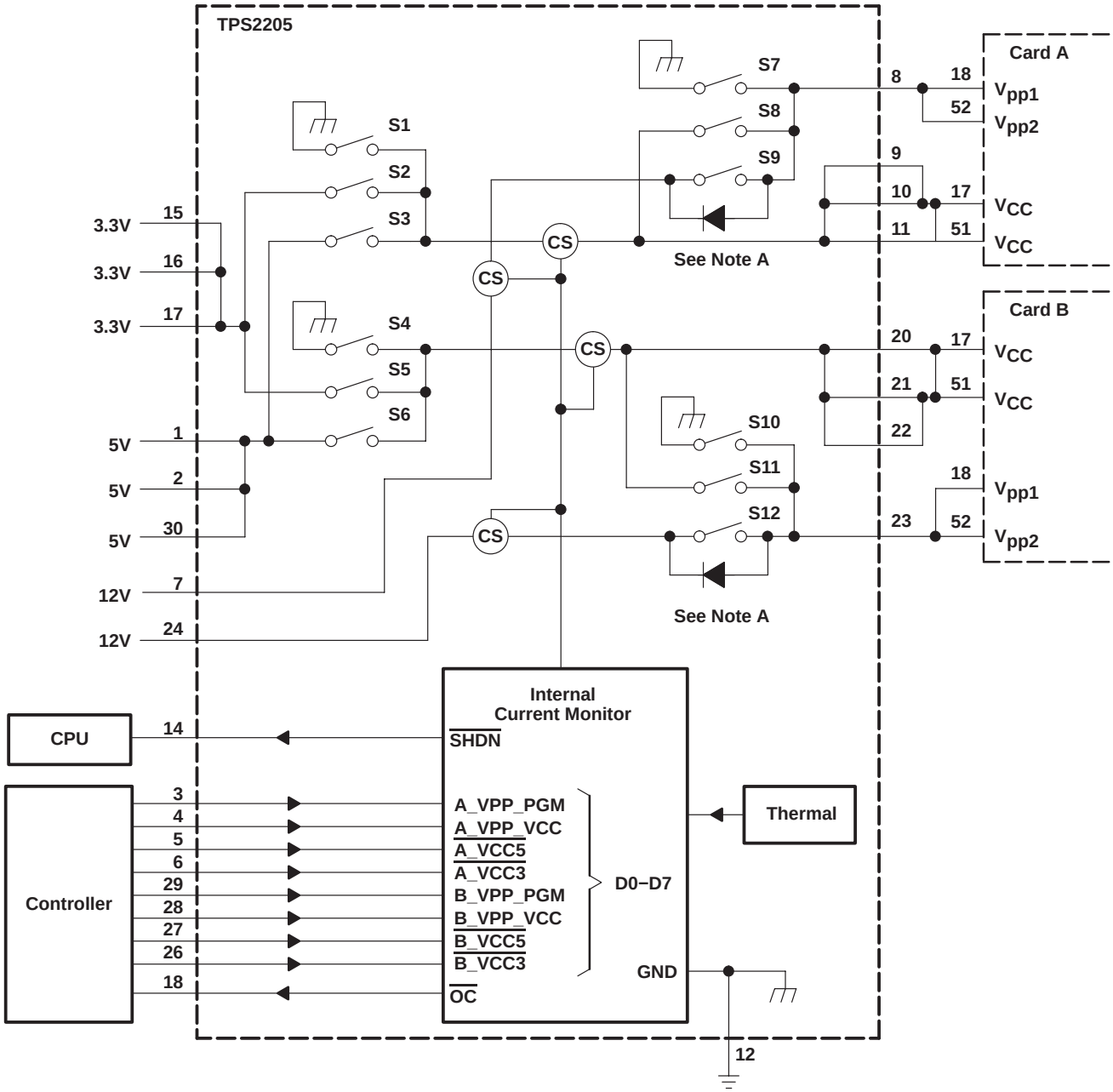

NOTE A: MOSFET switches S9 and S12 have a back-gate diode from the source to the drain. Unused switch inputs ;should never be grounded.

Figure 31. Internal Switching Matrix

APPLICATION INFORMATION

TPS2205 control logic

AVPP

CONTROL SIGNALS			INTERNAL SWITCH SETTINGS			OUTPUT
D8 $\overline{\text{SHDN}}$	D0 A_VPP_PGM	D1 A_VPP_VCC	S7	S8	S9	VAVPP
1	0	0	CLOSED	OPEN	OPEN	0 V
1	0	1	OPEN	CLOSED	OPEN	VCC†
1	1	0	OPEN	OPEN	CLOSED	VPP(12 V)
1	1	1	OPEN	OPEN	OPEN	Hi-Z
0	X	X	OPEN	OPEN	OPEN	Hi-Z

BVPP

CONTROL SIGNALS			INTERNAL SWITCH SETTINGS			OUTPUT
D8 $\overline{\text{SHDN}}$	D4 B_VPP_PGM	D5 B_VPP_VCC	S10	S11	S12	VBVPP
1	0	0	CLOSED	OPEN	OPEN	0 V
1	0	1	OPEN	CLOSED	OPEN	VCC‡
1	1	0	OPEN	OPEN	CLOSED	VPP(12 V)
1	1	1	OPEN	OPEN	OPEN	Hi-Z
0	X	X	OPEN	OPEN	OPEN	Hi-Z

AVCC

CONTROL SIGNALS			INTERNAL SWITCH SETTINGS			OUTPUT
D8 $\overline{\text{SHDN}}$	D3 $\overline{\text{A_VCC3}}$	D2 $\overline{\text{A_VCC5}}$	S1	S2	S3	VAVCC
1	0	0	CLOSED	OPEN	OPEN	0 V
1	0	1	OPEN	CLOSED	OPEN	3.3 V
1	1	0	OPEN	OPEN	CLOSED	5 V
1	1	1	CLOSED	OPEN	OPEN	0 V
0	X	X	OPEN	OPEN	OPEN	Hi-Z

BVCC

CONTROL SIGNALS			INTERNAL SWITCH SETTINGS			OUTPUT
D8 $\overline{\text{SHDN}}$	D6 $\overline{\text{B_VCC3}}$	D7 $\overline{\text{B_VCC5}}$	S4	S5	S6	VBVCC
1	0	0	CLOSED	OPEN	OPEN	0 V
1	0	1	OPEN	CLOSED	OPEN	3.3 V
1	1	0	OPEN	OPEN	CLOSED	5 V
1	1	1	CLOSED	OPEN	OPEN	0 V
0	X	X	OPEN	OPEN	OPEN	Hi-Z

† Output depends on AVCC
‡ Output depends on BVCC

ESD protection

All TPS2205 inputs and outputs incorporate ESD-protection circuitry designed to withstand a 2-kV human-body-model discharge as defined in MIL-STD-883C, Method 3015. The V_{CC} and V_{pp} outputs can be exposed to potentially higher discharges from the external environment through the PC Card connector. Bypassing the outputs with 0.1-µF capacitors protects the devices from discharges up to 10 kV.

APPLICATION INFORMATION

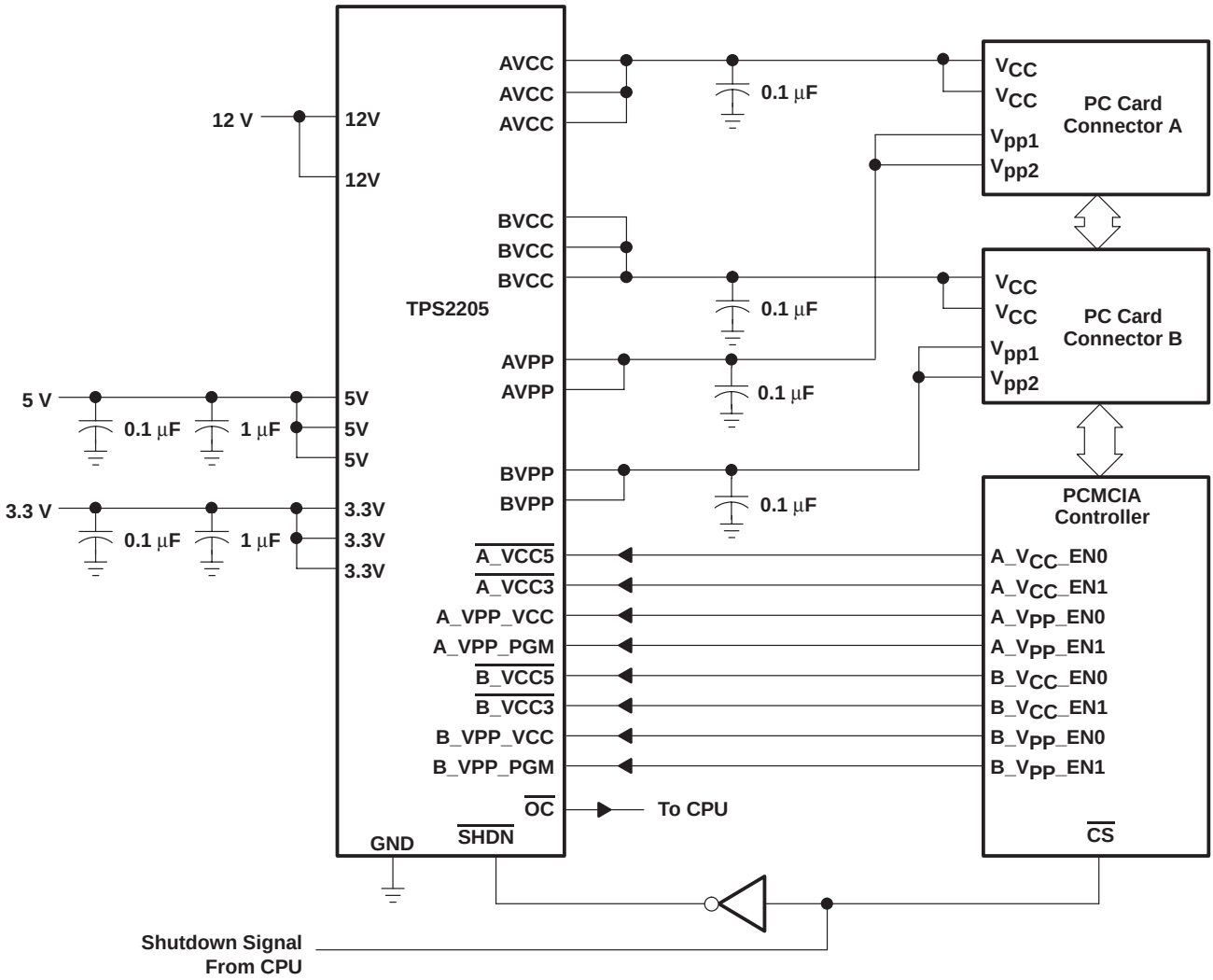

Figure 32. Detailed Interconnections and Capacitor Recommendations

APPLICATION INFORMATION

12-V flash memory supply

The TPS6734 is a fixed 12-V output boost converter capable of delivering 120 mA from inputs as low as 2.7 V. The device is pin-for-pin compatible with the MAX734 regulator and offers the following advantages: lower supply current, wider operating input-voltage range, and higher output currents. As shown in Figure 1, the only external components required are: an inductor, a Schottky rectifier, an output filter capacitor, an input filter capacitor, and a small capacitor for loop compensation. The entire converter occupies less than 0.7 in^2 of PCB space when implemented with surface-mount components. An enable input is provided to shut the converter down and reduce the supply current to 3 μA when 12 V is not needed.

The TPS6734 is a 170-kHz current-mode PWM (pulse-width modulation) controller with an n-channel MOSFET power switch. Gate drive for the switch is derived from the 12-V output after start-up to minimize the die area needed to realize the 0.7-Ω MOSFET and improve efficiency at input voltages below 5 V. Soft start is accomplished with the addition of one small capacitor. A 1.22-V reference (pin 2) is brought out for external use. For additional information, see the TPS6734 data sheet (SLVS127).

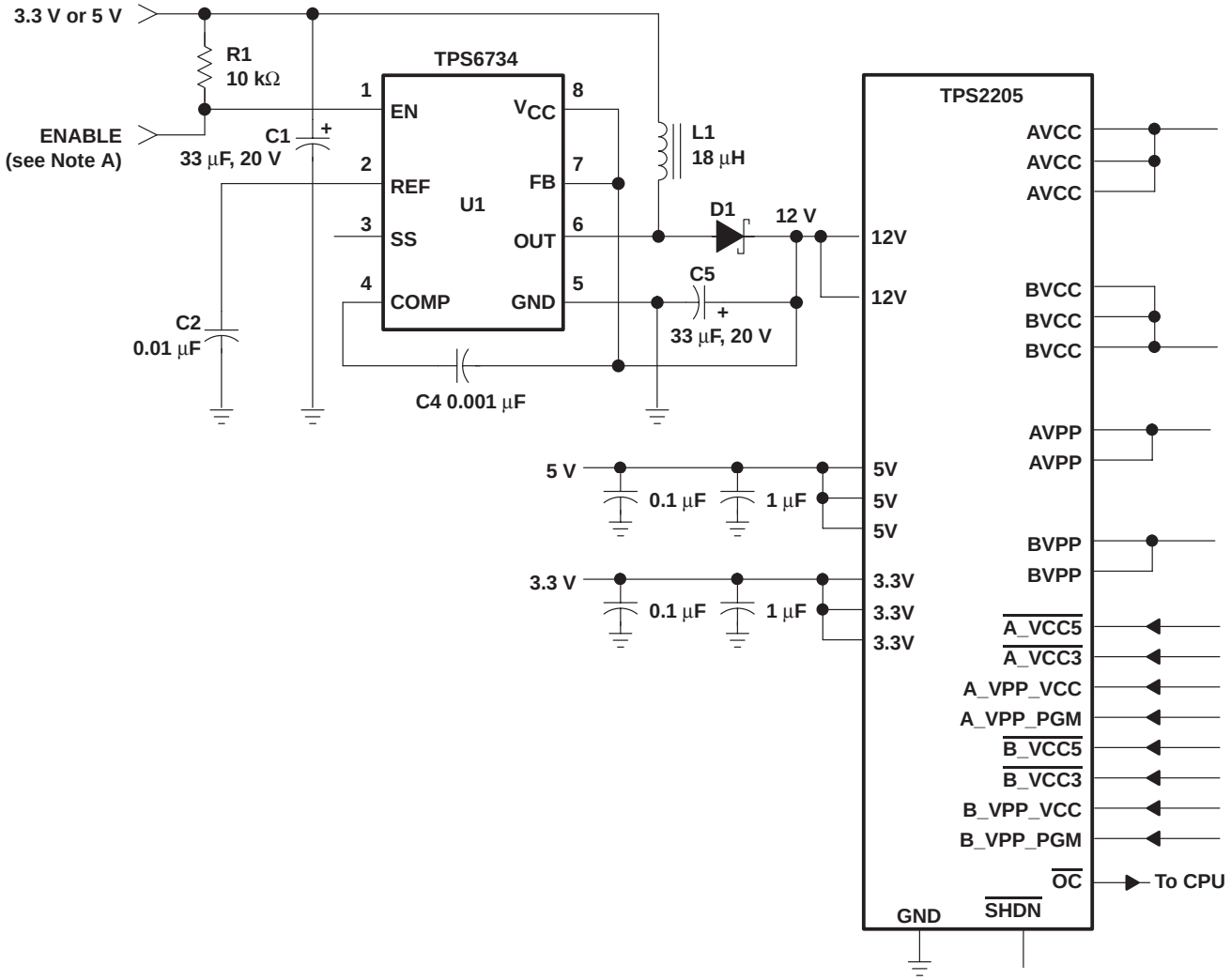

NOTE A: The enable terminal can be tied to a generall purpose I/O terminal on the PCMCIA controller or tied high.

Figure 33. TPS2205 with TPS6734 12-V, 120-mA Supply

PACKAGING INFORMATION

Orderable part number	Status (1)	Material type (2)	Package | Pins	Package qty | Carrier	RoHS (3)	Lead finish/ Ball material (4)	MSL rating/ Peak reflow (5)	Op temp (°C)	Part marking (6)
TPS2205IDAP	Active	Production	HTSSOP (DAP) | 32	46 | TUBE	Yes	NIPDAU	Level-3-260C-168 HR	-	TPS2205I
TPS2205IDAP.A	Active	Production	HTSSOP (DAP) | 32	46 | TUBE	Yes	NIPDAU	Level-3-260C-168 HR	-40 to 85	TPS2205I
TPS2205IDAPR	Active	Production	HTSSOP (DAP) | 32	2000 | LARGE T&R	Yes	NIPDAU	Level-3-260C-168 HR	-40 to 85	TPS2205I
TPS2205IDAPR.A	Active	Production	HTSSOP (DAP) | 32	2000 | LARGE T&R	Yes	NIPDAU	Level-3-260C-168 HR	-40 to 85	TPS2205I
TPS2205IDB	Active	Production	SSOP (DB) | 30	50 | TUBE	Yes	NIPDAU	Level-1-260C-UNLIM	-	TPS2205I
TPS2205IDB.A	Active	Production	SSOP (DB) | 30	50 | TUBE	Yes	NIPDAU	Level-1-260C-UNLIM	-40 to 85	TPS2205I
TPS2205IDBR	Active	Production	SSOP (DB) | 30	2000 | LARGE T&R	Yes	NIPDAU	Level-1-260C-UNLIM	-40 to 85	TPS2205I
TPS2205IDBR.A	Active	Production	SSOP (DB) | 30	2000 | LARGE T&R	Yes	NIPDAU	Level-1-260C-UNLIM	-40 to 85	TPS2205I

(1) **Status:** For more details on status, see our product life cycle.

(2) **Material type:** When designated, preproduction parts are prototypes/experimental devices, and are not yet approved or released for full production. Testing and final process, including without limitation quality assurance, reliability performance testing, and/or process qualification, may not yet be complete, and this item is subject to further changes or possible discontinuation. If available for ordering, purchases will be subject to an additional waiver at checkout, and are intended for early internal evaluation purposes only. These items are sold without warranties of any kind.

(3) **RoHS values:** Yes, No, RoHS Exempt. See the TI RoHS Statement for additional information and value definition.

(4) **Lead finish/Ball material:** Parts may have multiple material finish options. Finish options are separated by a vertical ruled line. Lead finish/Ball material values may wrap to two lines if the finish value exceeds the maximum column width.

(5) **MSL rating/Peak reflow:** The moisture sensitivity level ratings and peak solder (reflow) temperatures. In the event that a part has multiple moisture sensitivity ratings, only the lowest level per JEDEC standards is shown. Refer to the shipping label for the actual reflow temperature that will be used to mount the part to the printed circuit board.

(6) **Part marking:** There may be an additional marking, which relates to the logo, the lot trace code information, or the environmental category of the part.

Multiple part markings will be inside parentheses. Only one part marking contained in parentheses and separated by a "~" will appear on a part. If a line is indented then it is a continuation of the previous line and the two combined represent the entire part marking for that device.

Important Information and Disclaimer: The information provided on this page represents TI's knowledge and belief as of the date that it is provided. TI bases its knowledge and belief on information provided by third parties, and makes no representation or warranty as to the accuracy of such information. Efforts are underway to better integrate information from third parties. TI has taken and continues to take reasonable steps to provide representative and accurate information but may not have conducted destructive testing or chemical analysis on incoming materials and chemicals. TI and TI suppliers consider certain information to be proprietary, and thus CAS numbers and other limited information may not be available for release.

In no event shall TI's liability arising out of such information exceed the total purchase price of the TI part(s) at issue in this document sold by TI to Customer on an annual basis.

TAPE AND REEL INFORMATION

REEL DIMENSIONS

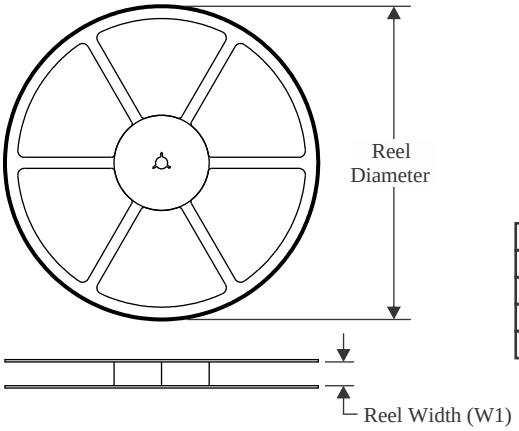

TAPE DIMENSIONS

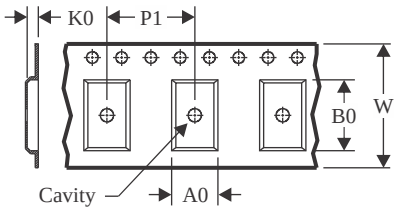

A0	Dimension designed to accommodate the component width
B0	Dimension designed to accommodate the component length
K0	Dimension designed to accommodate the component thickness
W	Overall width of the carrier tape
P1	Pitch between successive cavity centers

QUADRANT ASSIGNMENTS FOR PIN 1 ORIENTATION IN TAPE

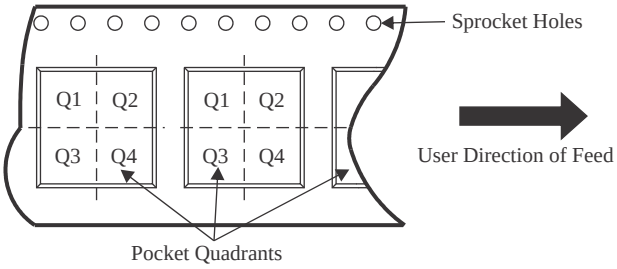

*All dimensions are nominal

Device	Package Type	Package Drawing	Pins	SPQ	Reel Diameter (mm)	Reel Width W1 (mm)	A0 (mm)	B0 (mm)	K0 (mm)	P1 (mm)	W (mm)	Pin1 Quadrant
TPS2205IDAPR	HTSSOP	DAP	32	2000	330.0	24.4	8.6	11.5	1.6	12.0	24.0	Q1
TPS2205IDBR	SSOP	DB	30	2000	330.0	16.4	8.2	10.5	2.5	12.0	16.0	Q1

TAPE AND REEL BOX DIMENSIONS

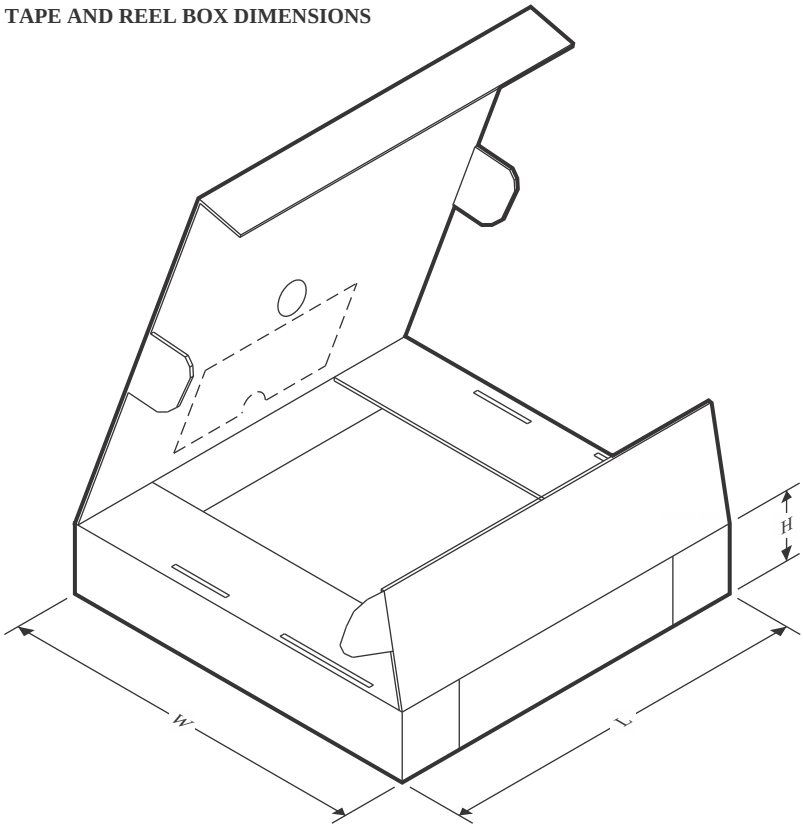

*All dimensions are nominal

Device	Package Type	Package Drawing	Pins	SPQ	Length (mm)	Width (mm)	Height (mm)
TPS2205IDAPR	HTSSOP	DAP	32	2000	350.0	350.0	43.0
TPS2205IDBR	SSOP	DB	30	2000	356.0	356.0	35.0

TUBE

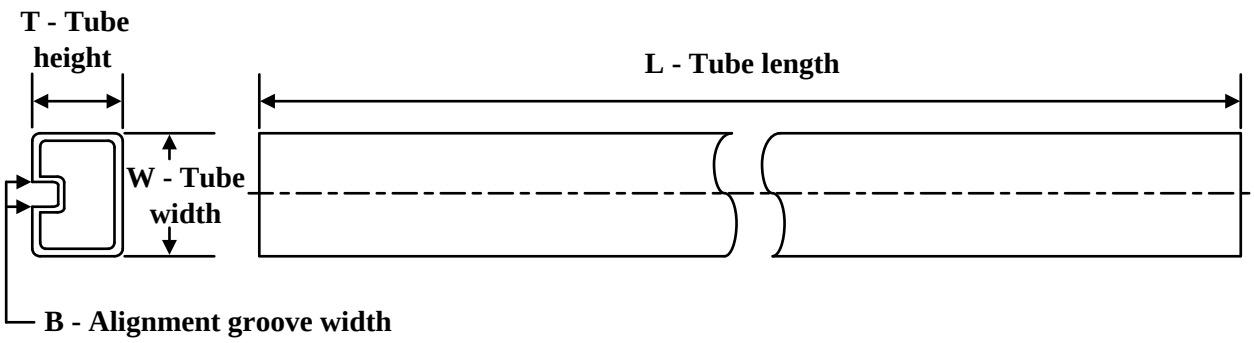

*All dimensions are nominal

Device	Package Name	Package Type	Pins	SPQ	L (mm)	W (mm)	T (µm)	B (mm)
TPS2205IDAP	DAP	HTSSOP	32	46	530	11.89	3600	4.9
TPS2205IDAP.A	DAP	HTSSOP	32	46	530	11.89	3600	4.9
TPS2205IDB	DB	SSOP	30	50	530	10.5	4000	4.1
TPS2205IDB.A	DB	SSOP	30	50	530	10.5	4000	4.1

DB (R-PDSO-G)** **PLASTIC SMALL-OUTLINE**

28 PINS SHOWN

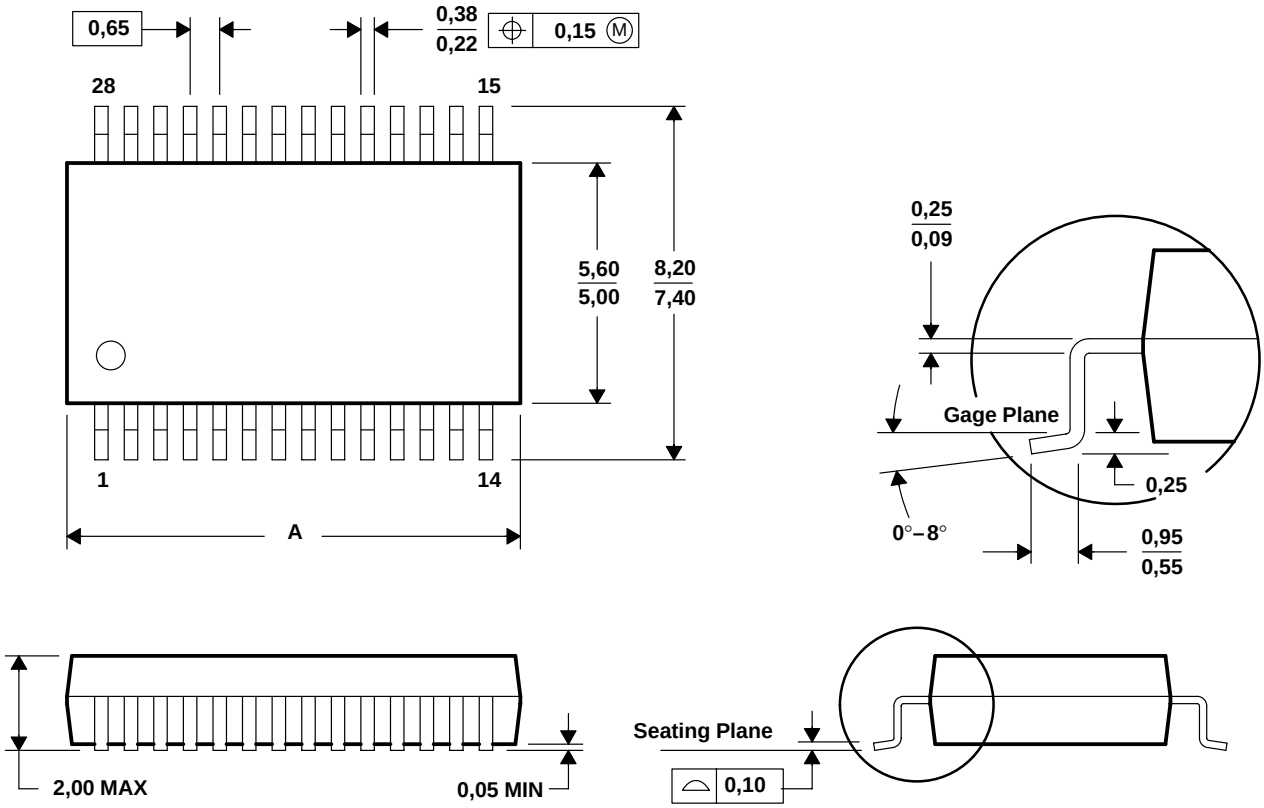

DIM \ PINS **	14	16	20	24	28	30	38
A MAX	6,50	6,50	7,50	8,50	10,50	10,50	12,90
A MIN	5,90	5,90	6,90	7,90	9,90	9,90	12,30

4040065 /E 12/01

NOTES: A. All linear dimensions are in millimeters.
B. This drawing is subject to change without notice.
C. Body dimensions do not include mold flash or protrusion not to exceed 0,15.
D. Falls within JEDEC MO-150

GENERIC PACKAGE VIEW

DAP 32

PowerPAD™ TSSOP - 1.2 mm max height

8.1 x 11, 0.65 mm pitch

PLASTIC SMALL OUTLINE

This image is a representation of the package family, actual package may vary.
Refer to the product data sheet for package details.

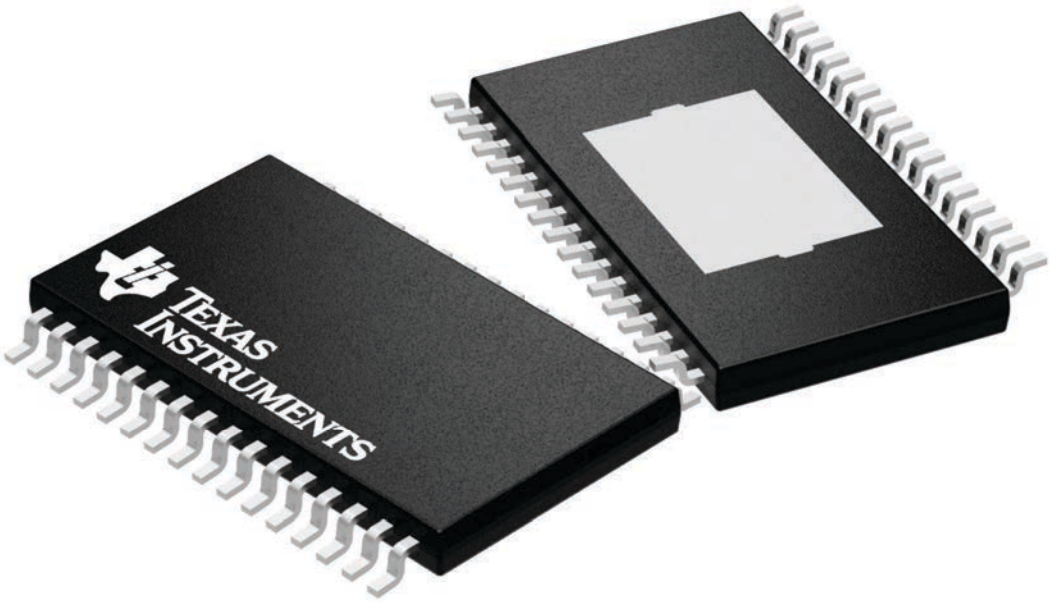

4225303/A

DAP (R-PDSO-G32) PowerPAD™ PLASTIC SMALL-OUTLINE PACKAGE

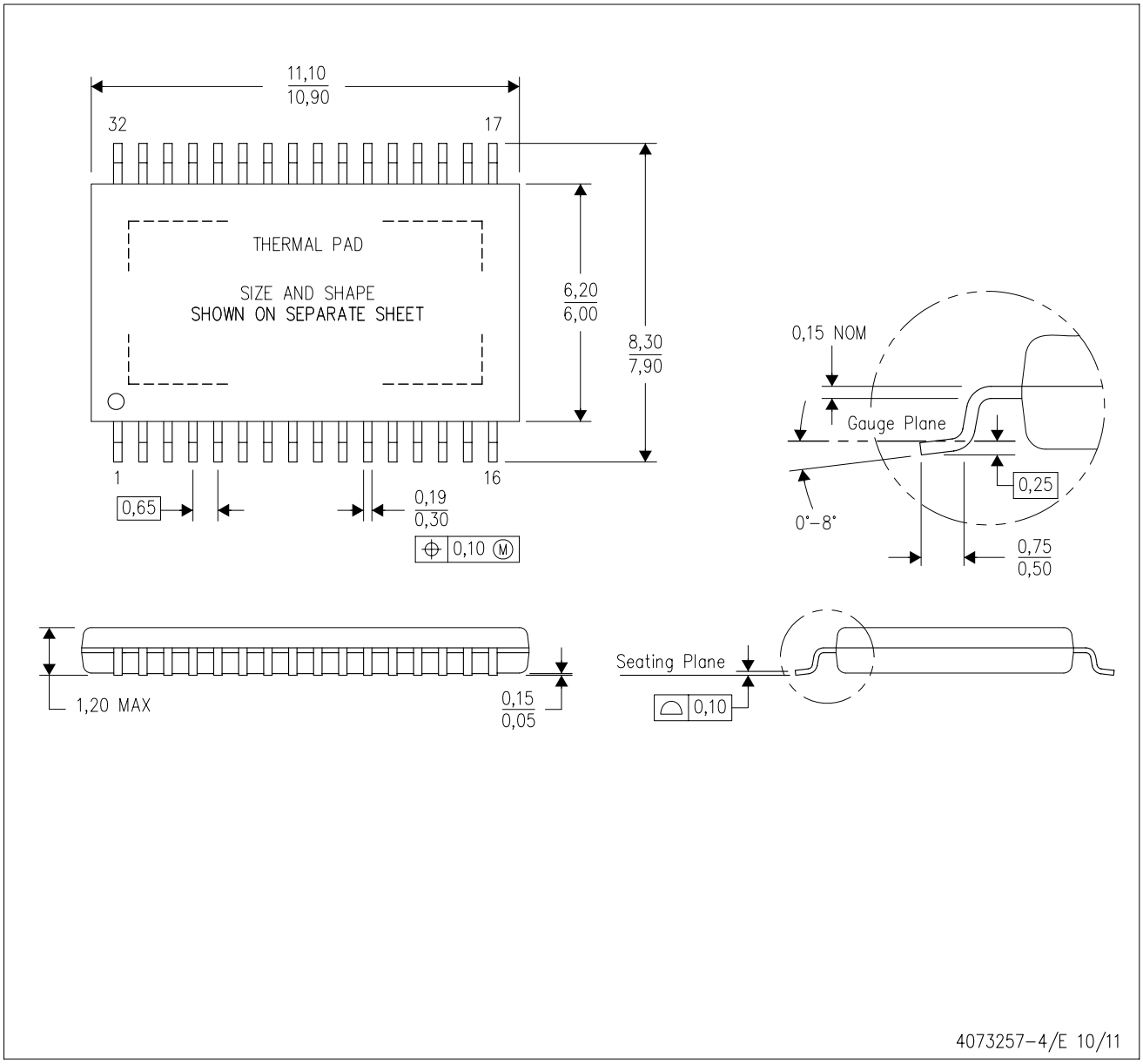

NOTES:
- A. All linear dimensions are in millimeters.
- B. This drawing is subject to change without notice.
- C. Body dimensions do not include mold flash or protrusion. Mold flash and protrusion shall not exceed 0.15 per side.
- D. This package is designed to be soldered to a thermal pad on the board. Refer to Technical Brief, PowerPad Thermally Enhanced Package, Texas Instruments Literature No. SLMA002 for information regarding recommended board layout. This document is available at www.ti.com <http://www.ti.com>.
- F. Falls within JEDEC MO-153 Variation DCT.

PowerPAD is a trademark of Texas Instruments.

DAP (R–PDSO–G32) PowerPAD™ PLASTIC SMALL OUTLINE

THERMAL INFORMATION

This PowerPAD™ package incorporates an exposed thermal pad that is designed to be attached to a printed circuit board (PCB). The thermal pad must be soldered directly to the PCB. After soldering, the PCB can be used as a heatsink. In addition, through the use of thermal vias, the thermal pad can be attached directly to the appropriate copper plane shown in the electrical schematic for the device, or alternatively, can be attached to a special heatsink structure designed into the PCB. This design optimizes the heat transfer from the integrated circuit (IC).

For additional information on the PowerPAD package and how to take advantage of its heat dissipating abilities, refer to Technical Brief, PowerPAD Thermally Enhanced Package, Texas Instruments Literature No. SLMA002 and Application Brief, PowerPAD Made Easy, Texas Instruments Literature No. SLMA004. Both documents are available at www.ti.com.

The exposed thermal pad dimensions for this package are shown in the following illustration.

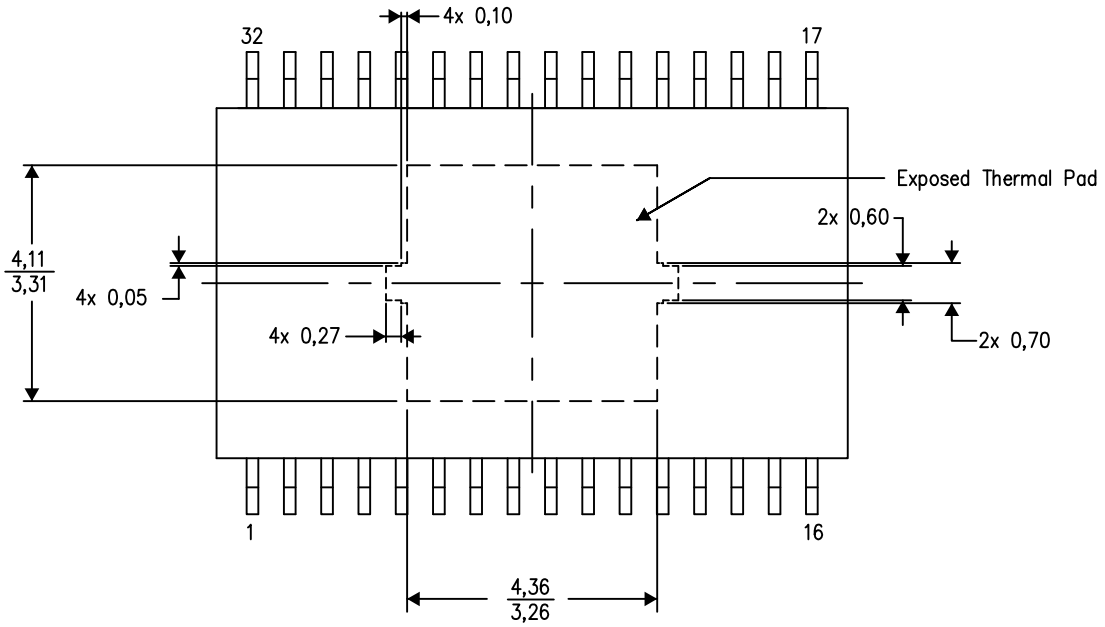

Top View

Exposed Thermal Pad Dimensions

4206319–3/M 09/13

NOTE: All linear dimensions are in millimeters

PowerPAD is a trademark of Texas Instruments.

DAP (R–PDSO–G32) PowerPAD™ PLASTIC SMALL OUTLINE PACKAGE

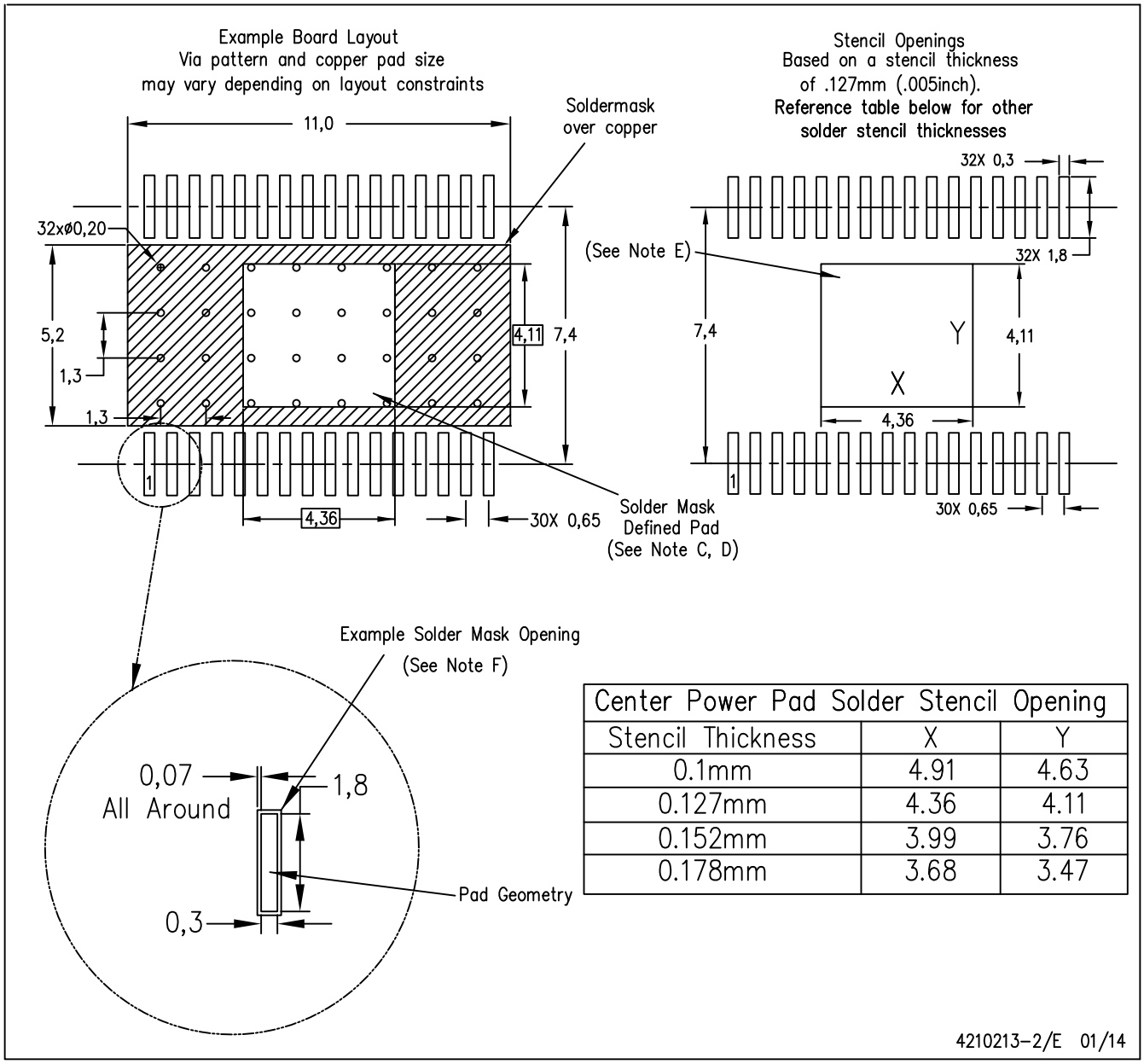

Center Power Pad Solder Stencil Opening		
Stencil Thickness	X	Y
0.1mm	4.91	4.63
0.127mm	4.36	4.11
0.152mm	3.99	3.76
0.178mm	3.68	3.47

NOTES:
- A. All linear dimensions are in millimeters.
- B. This drawing is subject to change without notice.
- C. Customers should place a note on the circuit board fabrication drawing not to alter the center solder mask defined pad.
- D. This package is designed to be soldered to a thermal pad on the board. Refer to Technical Brief, PowerPad Thermally Enhanced Package, Texas Instruments Literature No. SLMA002, SLMA004, and also the Product Data Sheets for specific thermal information, via requirements, and recommended board layout. These documents are available at www.ti.com <http://www.ti.com>. Publication IPC–7351 is recommended for alternate designs.
- E. Laser cutting apertures with trapezoidal walls and also rounding corners will offer better paste release. Customers should contact their board assembly site for stencil design recommendations. Refer to IPC–7525 for other stencil recommendations.
- F. Contact the board fabrication site for recommended soldermask tolerances.

PowerPAD is a trademark of Texas Instruments

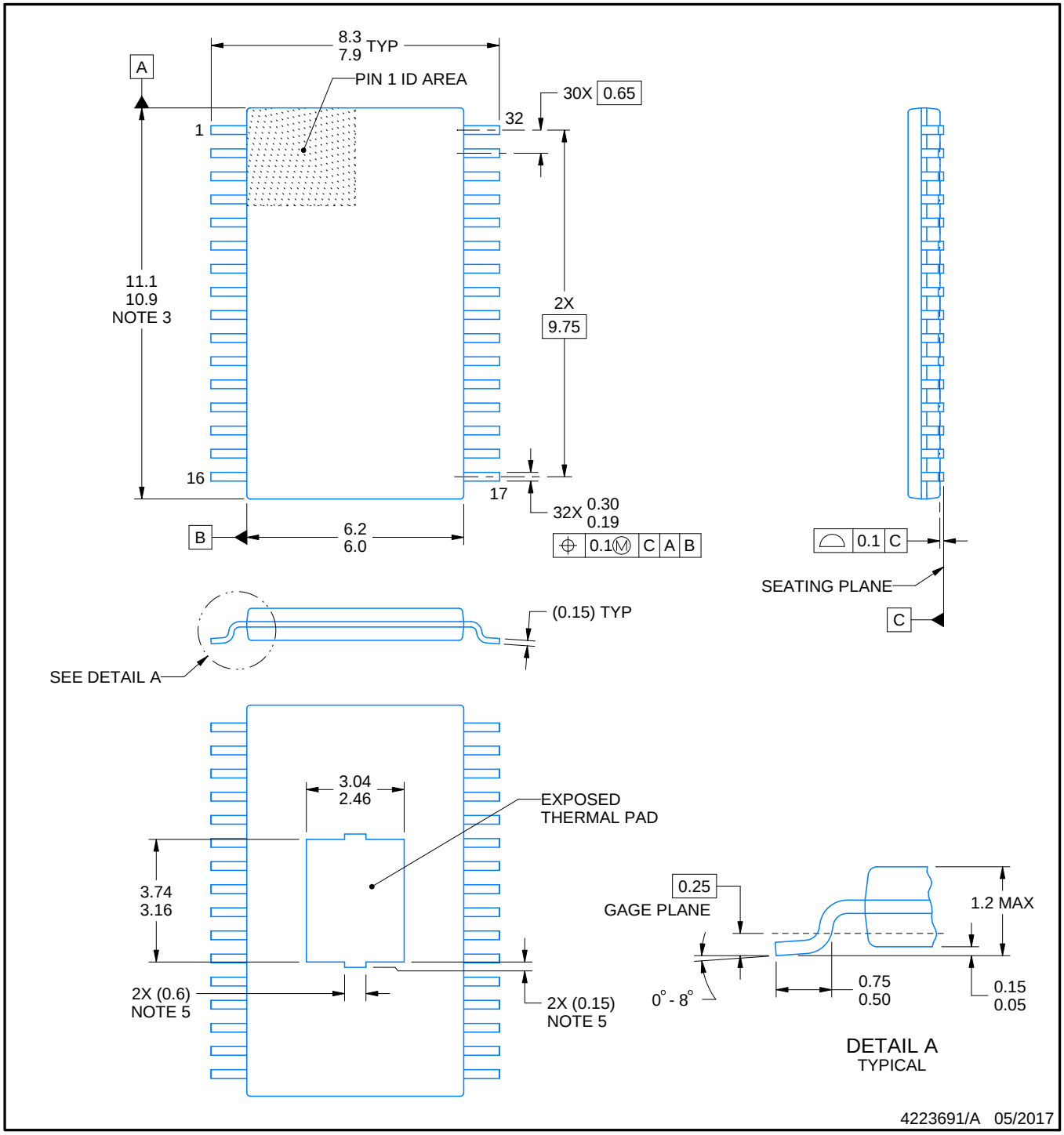

PowerPAD is a trademark of Texas Instruments.

NOTES:

1. All linear dimensions are in millimeters. Any dimensions in parenthesis are for reference only. Dimensioning and tolerancing per ASME Y14.5M.
2. This drawing is subject to change without notice.
3. This dimension does not include mold flash, protrusions, or gate burrs. Mold flash, protrusions, or gate burrs shall not exceed 0.15 mm per side.
4. Reference JEDEC registration MO-153.
5. Features may differ and may not be present.

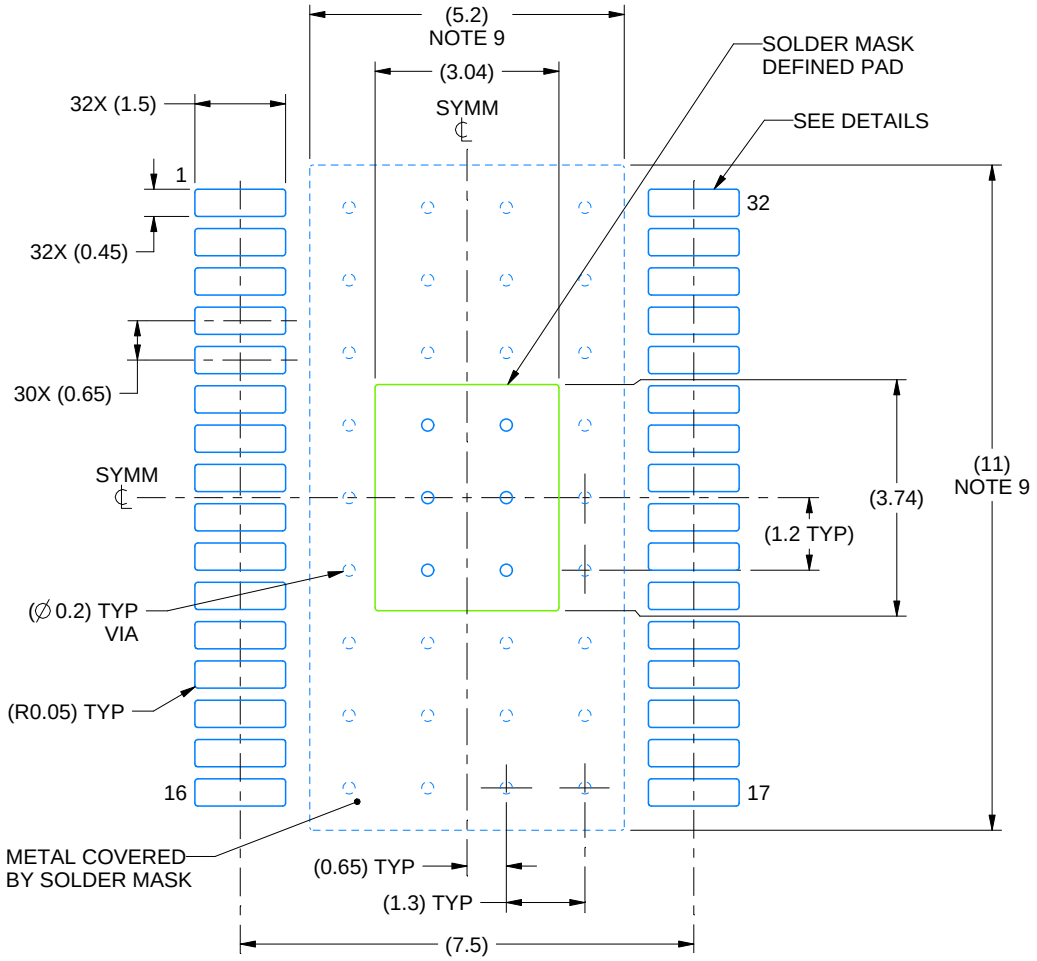

LAND PATTERN EXAMPLE
EXPOSED METAL SHOWN
SCALE:8X

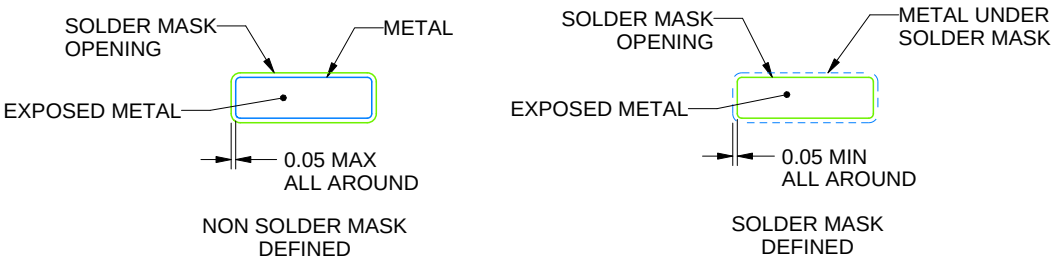

SOLDER MASK DETAILS
NOT TO SCALE

4223691/A 05/2017

NOTES: (continued)

6. Publication IPC-7351 may have alternate designs.
7. Solder mask tolerances between and around signal pads can vary based on board fabrication site.
8. This package is designed to be soldered to a thermal pad on the board. For more information, see Texas Instruments literature numbers SLMA002 (www.ti.com/lit/slma002) and SLMA004 (www.ti.com/lit/slma004).
9. Size of metal pad may vary due to creepage requirement.

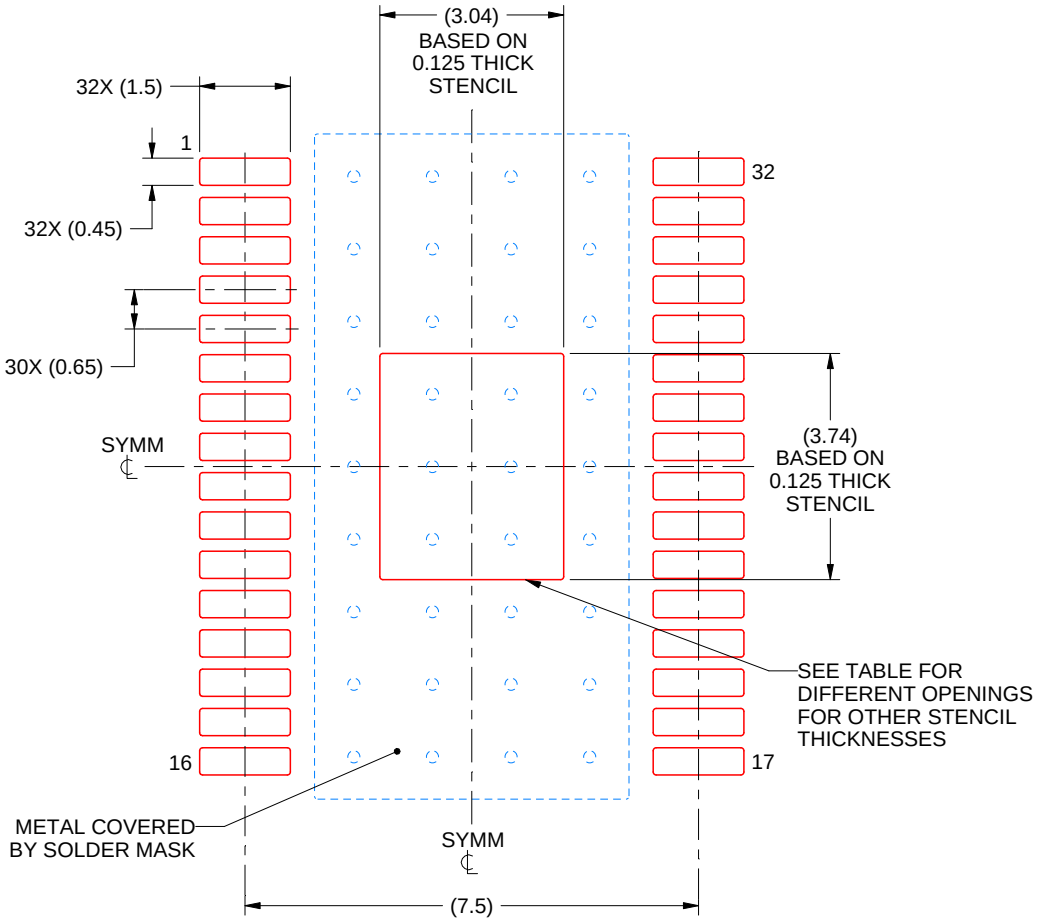

SOLDER PASTE EXAMPLE
EXPOSED PAD
100% PRINTED SOLDER COVERAGE BY AREA
SCALE:8X

STENCIL THICKNESS	SOLDER STENCIL OPENING
0.1	3.40 X 4.18
0.125	3.04 X 3.74 (SHOWN)
0.15	2.78 X 3.41
0.175	2.57 X 3.16

4223691/A 05/2017

NOTES: (continued)

10. Laser cutting apertures with trapezoidal walls and rounded corners may offer better paste release. IPC-7525 may have alternate design recommendations.
11. Board assembly site may have different recommendations for stencil design.

IMPORTANT NOTICE AND DISCLAIMER

TI PROVIDES TECHNICAL AND RELIABILITY DATA (INCLUDING DATA SHEETS), DESIGN RESOURCES (INCLUDING REFERENCE DESIGNS), APPLICATION OR OTHER DESIGN ADVICE, WEB TOOLS, SAFETY INFORMATION, AND OTHER RESOURCES “AS IS” AND WITH ALL FAULTS, AND DISCLAIMS ALL WARRANTIES, EXPRESS AND IMPLIED, INCLUDING WITHOUT LIMITATION ANY IMPLIED WARRANTIES OF MERCHANTABILITY, FITNESS FOR A PARTICULAR PURPOSE OR NON-INFRINGEMENT OF THIRD PARTY INTELLECTUAL PROPERTY RIGHTS.

These resources are intended for skilled developers designing with TI products. You are solely responsible for (1) selecting the appropriate TI products for your application, (2) designing, validating and testing your application, and (3) ensuring your application meets applicable standards, and any other safety, security, regulatory or other requirements.

These resources are subject to change without notice. TI grants you permission to use these resources only for development of an application that uses the TI products described in the resource. Other reproduction and display of these resources is prohibited. No license is granted to any other TI intellectual property right or to any third party intellectual property right. TI disclaims responsibility for, and you will fully indemnify TI and its representatives against, any claims, damages, costs, losses, and liabilities arising out of your use of these resources.

TI’s products are provided subject to TI’s Terms of Sale or other applicable terms available either on ti.com or provided in conjunction with such TI products. TI’s provision of these resources does not expand or otherwise alter TI’s applicable warranties or warranty disclaimers for TI products.

TI objects to and rejects any additional or different terms you may have proposed.

Mailing Address: Texas Instruments, Post Office Box 655303, Dallas, Texas 75265
Copyright © 2025, Texas Instruments Incorporated