WLED DRIVER FOR NOTEBOOK DISPLAY

Check for Samples: TPS61180/1/2

FEATURES

- **5 V to 24 V Input Voltage**
- **Integrated 1.5 A 40 V MOSFET**
- **1.0 MHz/1.3 MHz Switching Frequency**
- **Boost Output Auto-Adaptive to WLED Voltages**
- **Small External Components**
- **Integrated Loop Compensation**
- **Six Current Sink of 25 mA**
- **Up to 10 WLED in Series**
- **Less Than 3% Current Matching and Accuracy**
- **Up to 1000:1 PWM Brightness DImming Range**
- **Minimized Output Ripple Under PWM Dimming**
- **Driver for Input/Output Isolation PFET**
- **True Shutdown**
- **Over Voltage Protection**
- **WLED Open/Short Protection**
- **Built-in Soft Start**
- **16L 3 mm×3 mm QFN**

APPLICATIONS

- **Notebook LCD Display Backlight**
- **UMPC LCD Display Backlight**
- **Backlight for Media Form Factor LCD display**

DESCRIPTION

The TPS61180/1/2 ICs provide highly integrated solutions for media size LCD backlight. These devices have a built-in high efficiency boost regulator with integrated 1.5A/40V power MOSFET. The six current sink regulators provide high precision current regulation and matching. In total, the device can support up to 60 WLED. In addition, the boost output automatically adjusts its voltage to the WLED forward voltage to improve efficiency.

The devices support pulse width modulation (PWM) brightness dimming. During dimming, the WLED current is turned on/off at the duty cycle and frequency determined by the PWM signal input on the DCRTL pin. One potential issue of PWM dimming is audible noises from the output ceramic capacitors. The TPS61180/1/2 family is designed to minimize this output AC ripple across a wide dimming duty cycle and frequency range; therefore, reducing the audible noise.

The TPS61180/1/2 ICs provide a driver output for an external PFET connected between the input and inductor. During short circuit or over-current conditions, the ICs turn off the external PFET and disconnect the battery from the WLEDs. The PFET is also turned off during IC shutdown (true shutdown) to prevent any leakage current of the battery. The device also integrates over-voltage protection, soft-start and thermal shutdown.

The TPS61180 IC requires external 3.3V IC supply, while TPS61181 and TPS61182 ICs have a built-in linear regulator for the IC supply. All the devices are in a 3×3 mm QFN package.

Please be aware that an important notice concerning availability, standard warranty, and use in critical applications of Texas Instruments semiconductor products and disclaimers thereto appears at the end of this data sheet.

PRODUCTION DATA information is current as of publication date. Products conform to specifications per the terms of the Texas Instruments standard warranty. Production processing does not necessarily include testing of all parameters.

Copyright © 2007–2013, Texas Instruments Incorporated

This integrated circuit can be damaged by ESD. Texas Instruments recommends that all integrated circuits be handled with appropriate precautions. Failure to observe proper handling and installation procedures can cause damage.

ESD damage can range from subtle performance degradation to complete device failure. Precision integrated circuits may be more susceptible to damage because very small parametric changes could cause the device not to meet its published specifications.

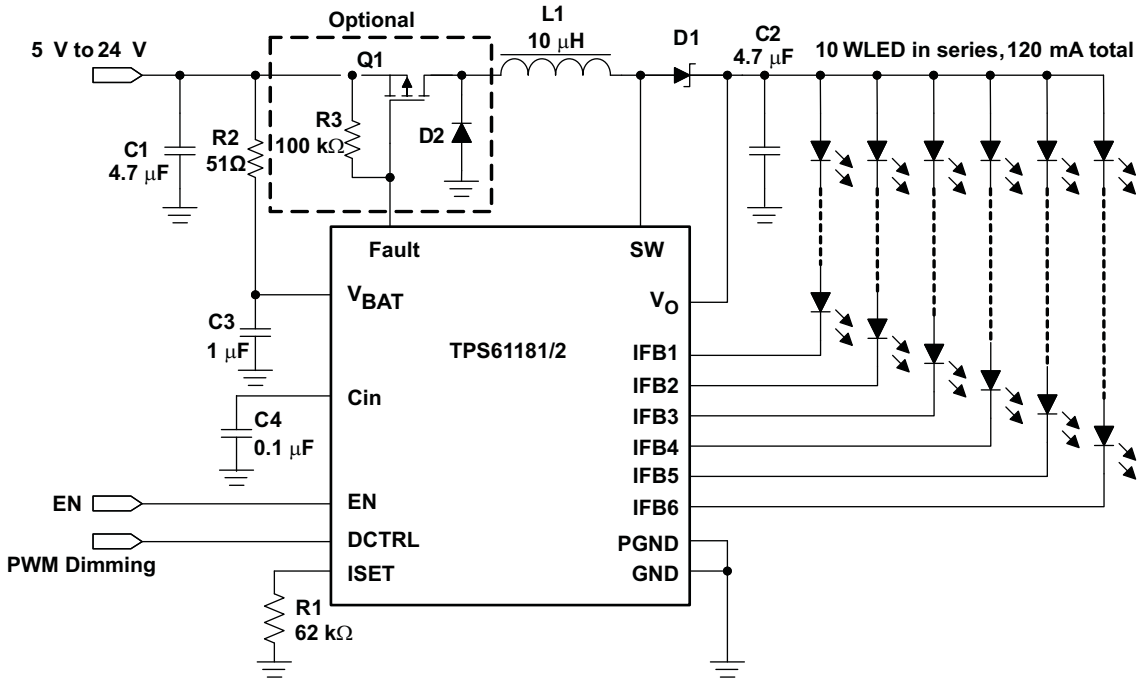

Figure 1. TPS61181/2 TYPICAL APPLICATION

ORDERING INFORMATION(1)

PACKAGE	IC SUPPLY	SWITCHING FREQUENCY (TYP)	PACKAGE MARKING
TPS61180RTE	External 3.3 V	1.0 MHz	CCG
TPS61181RTE	Built-in LDO	1.0 MHz	CCH
TPS61182RTE	Built-in LDO	1.3 MHz	CCI

(1) For the most current package and ordering information, see the Package Option Addendum at the end of this document, or see the TI website at www.ti.com.

Copyright © 2007–2013, Texas Instruments Incorporated

PINOUT

QFN PACKAGE
16 Pin 3x3
(TOP VIEW)

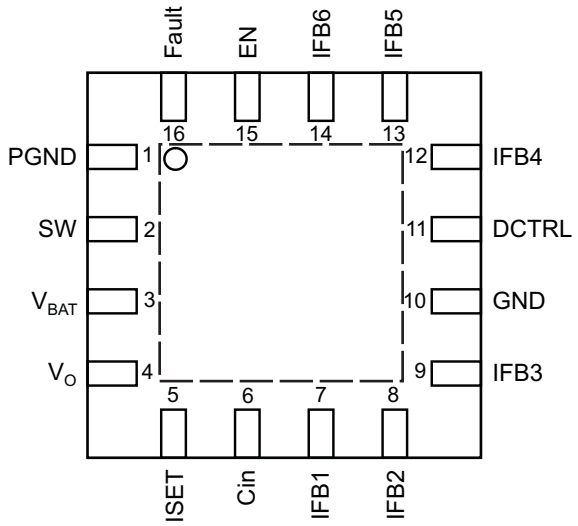

TERMINAL FUNCTIONS

TERMINAL NO.	TERMINAL NAME	I/O	DESCRIPTION
1	PGND	I	Power ground of the IC. Internally, it connects to the source of the PWM switch.
2	SW	I	This pin connects to the drain of the internal PWM switch, external Schottky diode and inductor.
3	V_{BAT}	I	This pin is connected to the battery supply. It provides the pull-up voltage for the Fault pin and battery voltage signal. For TPS61181/2, this is also the input to the internal LDO.
4	V_O	O	This pin monitors the output of the boost regulator. Connect this pin to the anode of the WLED strings.
5	ISET	I	The resistor on this pin programs the WLED output current.
6	Cin	I	Supply voltage of the IC. For TPS61181/2, it is the output of the internal LDO. Connect 0.1 µF bypass capacitor to this pin. For TPS61180, connect an external 3.3 V supply to power the IC.
7, 8, 9 12, 13, 14	IFB1-IFB3 IFB4-IFB6	I	Current sink regulation inputs. They are connected to the cathode of WLEDs. The PWM loop regulates the lowest V_{IFB} to 400 mV. Each channel is limited to 25 mA current.
10	GND	I	Signal ground of the IC.
11	DCTRL	I	Dimming control logic input. The dimming frequency range is 100 Hz to 1 kHz.
15	EN	I	The enable pin to the IC. For TPS61181/2, a logic high signal turns on the internal LDO and enables the IC. Therefore, do not connect the EN pin to the Cin pin.
16	Fault	I	Gate driver output for an external PFET used for fault protection. It can also be used as signal output for system fault report.

Copyright © 2007–2013, Texas Instruments Incorporated

FUNCTIONAL BLOCK DIAGRAM

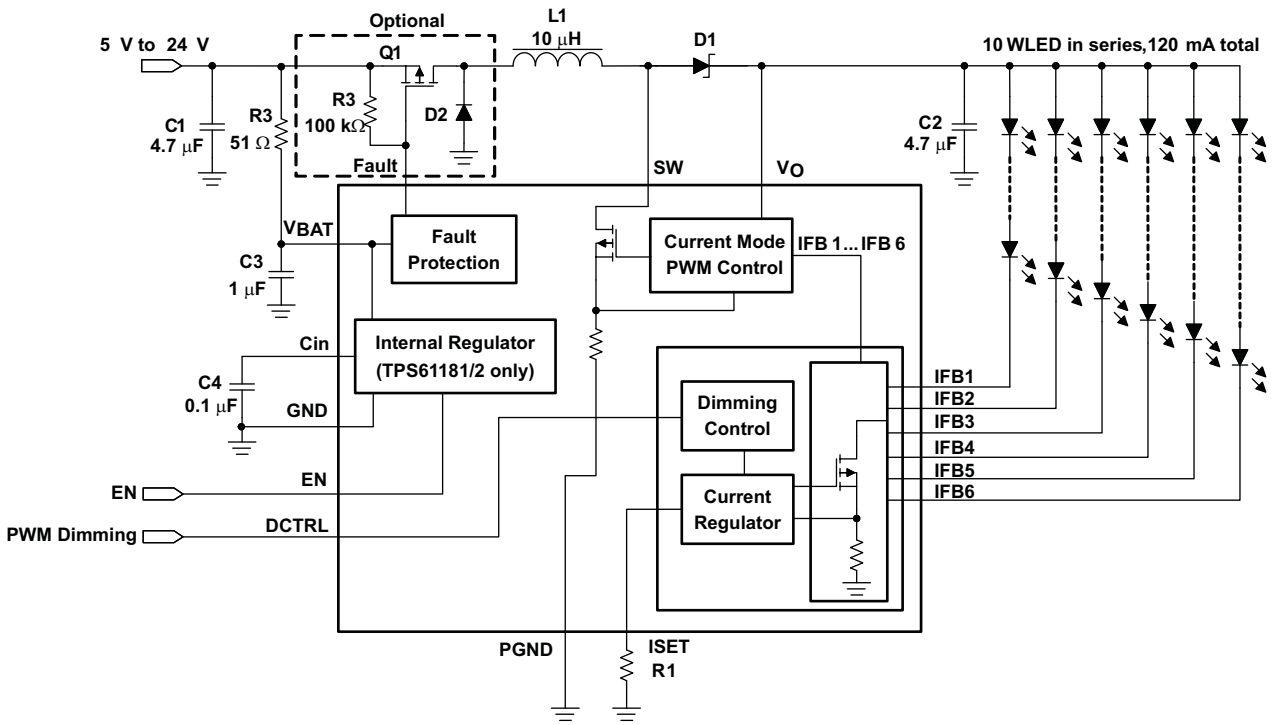

ABSOLUTE MAXIMUM RATINGS

over operating free-air temperature range (unless otherwise noted) (1)

	VALUE	UNIT
Voltages on pin V_{BAT} and Fault(2)	–0.3 to 24	V
Voltage on pin Cin(2)	–0.3 to 3.6	V
Voltage on pin SW and V_O (2)	–0.3 to 40	V
Voltage on pin IFB1 to IFB6(2)	–0.3 to 20	V
Voltage on all other pins (2)	–0.3 to 7	V
Continuous power dissipation	See Dissipation Rating Table	
Operating junction temperature range	–40 to 150	°C
Storage temperature range	–65 to 150	°C

(1) Stresses beyond those listed under *absolute maximum ratings* may cause permanent damage to the device. These are stress ratings only, and functional operation of the device at these or any other conditions beyond those indicated under *recommended operating conditions* is not implied. Exposure to absolute-maximum-rated conditions for extended periods may affect device reliability.
(2) All voltage values are with respect to network ground terminal.

DISSIPATION RATINGS

PACKAGE	$R_{\theta JA}$	$T_A \leq 25°C$ POWER RATING	$T_A = 70°C$ POWER RATING	$T_A = 85°C$ POWER RATING
TPS61180/1/2RTE(1)	270°C/W	370 mW	204 mW	148 mW
TPS61180/1/2RTE(2)	48.7°C/W	2.05 W	1.13 W	821 mW

(1) The JEDEC low-K (1s) board used to derive this data was a 3in×3in, two-layer board with 2-ounce copper traces on top of the board.
(2) The JEDEC high-K (2s2p) board used to derive this data was a 3in×3in, multilayer board with 1-ounce internal power and ground.

Copyright © 2007–2013, Texas Instruments Incorporated

RECOMMENDED OPERATING CONDITIONS

		MIN	TYP	MAX	UNIT
V_{bat}	Battery input voltage range	5.0		24	V
C_{in}	IC supply voltage range	2.7		3.6	V
V_O	Output voltage range	Vin		38	V
L	Inductor	4.7		10	µH
C_I	Input capacitor	1			µF
C_O	Output capacitor	2.2		10	µF
F_{PWM}	PWM dimming frequency	0.1		1	kHz
T_A	Operating ambient temperature	–40		85	°C
T_J	Operating junction temperature	–40		125	°C

ELECTRICAL CHARACTERISTICS

V_{BAT} = 10.8 V, 0.1 µF at Cin, EN = Logic High, IFB current = 15m A, IFB voltage = 500 mV, T_A = –40°C to 85°C, typical values are at T_A = 25°C (unless otherwise noted)

PARAMETER		TEST CONDITIONS		MIN	TYP	MAX	UNIT
SUPPLY CURRENT							
V_{BAT}	Battery input voltage range			5.0		24	V
V_{cc}	IC supply voltage range	TPS61180 only		2.7	3.15	3.6	V
V_{cin}	Cin pin output voltage	TPS61181/TPS61182 only		2.7	3.15	3.6	V
I_{q_bat}	Operating quiescent current into V_{BAT}	Device enable, switching no load, Vin = 24 V	TPS61180			1	mA
			TPS61181/2			3	
I_{q_Vcc}	Operating quiescent current into Cin pin	TPS61180 only				2	mA
I_{Q_sw}	Operating quiescent current into V_O	V_O = 35V				50	µA
I_{SD}	Shutdown current	EN=GND			2	18	µA
V_{cc_UVLO}	Cin pin under-voltage lockout threshold	TPS61180 only			2.2	2.4	V
V_{bat_UVLO}	V_{BAT} under-voltage lockout threshold	When Vin ramp down			4.2	4.5	V
V_{bat_hys}	V_{BAT} under-voltage lockout hysteresis	When Vin ramp up			300		mV
EN AND DCTRL							
V_H	Logic high voltage			1.2			V
V_L	Logic low voltage					0.4	V
R_{PD}	Pull down resistor on both pins			400	800	1600	kΩ
T_{SD}	EN pulse width to shutdown	EN high to low	TPS61180/1	27		37	ms
			TPS61182	21		28	
CURRENT REGULATION							
V_{ISET}	ISET pin voltage			1.204	1.229	1.253	V
K_{ISET}	Current multiple Iout/ISET	ISET current = 15 µA and 25 µA		970	1000	1030	
IFB	Current accuracy	Riset = 62K		19.4	20	20.6	mA
K_m	$(I_{max}–I_{min})/I_{AVG}$	ISET current = 15 µA and 25 µA			1	2.5	%
I_{leak}	IFB pin leakage current	IFB voltage = 20 V on all pins				3	µA
I_{IFB_MAX}	Current sink max output current	IFB = 425 mV		25			mA
BOOST OUTPUT REGULATION							
V_{IFB_L}	V_O dial up threshold	Measured on V_{IFB}(min)			400		mV
V_{IFB_H}	V_O dial down threshold	Measured on V_{IFB}(min)			700		mV
V_{reg_L}	Min Vout regulation voltage					16	V
V_{o_step}	V_O stepping voltage				100	150	mV
POWER SWITCH							
R_{PWM_SW}	PWM FET on-resistance	V_{CC} = 3.3 V for TPS61180			0.2	0.45	Ω
R_{start}	Start up charging resistance	V_O = 0 V		100		300	Ω

Copyright © 2007–2013, Texas Instruments Incorporated

ELECTRICAL CHARACTERISTICS (continued)

V_{BAT} = 10.8 V, 0.1 µF at Cin, EN = Logic High, IFB current = 15m A, IFB voltage = 500 mV, T_A = –40°C to 85°C, typical values are at T_A = 25°C (unless otherwise noted)

PARAMETER		TEST CONDITIONS	MIN	TYP	MAX	UNIT
V_{start_r}	Isolation FET start up threshold	V_{IN}–V_O, V_O ramp up		1.2	2	V
I_{LN_NFET}	PWM FET leakage current	V_{SW} = 35 V, T_A = 25°C			1	µA
OSCILLATOR						
f_S	Oscillator frequency	TPS61182	1.2	1.3	1.5	MHz
		TPS61180/1	0.9	1.0	1.2	
D_{max}	Maximum duty cycle	IFB = 0 V	85	94		%
D_{min}	Minimum duty cycle	TPS61182			8	%
		TPS61180/1			7	
OS, SC, OVP AND SS						
I_{LIM}	N-Channel MOSFET current limit	D = D_{max}	1.5		3	A
V_{ovp}	V_O overvoltage threshold	Measured on the V_O pin	38	39	40	V
V_{ovp_IFB}	IFB overvoltage threshold	Measured on the IFBx pin	15	17	20	V
V_{sc}	Short circuit detection threshold	V_{IN}-V_O, V_O ramp down		1.7	2.5	V
V_{sc_dly}	Short circuit detection delay during start up			32		ms
V_{IFB_nouse}	IFB no use detection threshold	TPS61180 Only		0.6		V
Fault OUTPUT						
V_{fault_high}	Fault high voltage	Measured as V_{bat}–V_{Fault}		0.1		V
V_{fault_low}	Fault low voltage	Measured as V_{bat}–V_{Fault}, sink 0.1mA, Vin = 15 V	6	8	10	V
THERMAL SHUTDOWN						
$T_{shutdown}$	Thermal shutdown threshold			160		°C
$T_{hysteresis}$	Thermal shutdown threshold hysteresis			15		°C

Copyright © 2007–2013, Texas Instruments Incorporated

TYPICAL CHARACTERISTICS

Table of Graphs		Figure
Load Efficiency TPS61181	V_{bat}= 11V; V_O=28.8V, 23.2V and 17.6V; L=4.7uH	Figure 2
Load Efficiency TPS61181	V_{bat}= 11V; V_O=36.2V and 31.6V; L=4.7uH	Figure 3
Load Efficiency TPS61181	V_{bat}= 11V; V_O=28.8V; L=4.7uH, L=10uH	Figure 4
Load Efficiency TPS61181	V_{bat}= 7V, 11V and 19V; V_O=28.8V; L=4.7uH	Figure 5
PWM Dimming Efficiency	V_{bat}= 7V, 11V and 19V; V_O=28.8V; I_{set}= 20µA; PWM Freq = 200Hz	Figure 6
PWM Dimming Efficiency	V_{bat}= 7V, 11V and 19V; V_O=36.2V; I_{set}= 20µA; PWM Freq = 200Hz	Figure 7
Dimming Linearity	V_{bat}= 11V; V_O=28.8V; I_{set}= 20µA; PWM Freq = 1kHz	Figure 8
Dimming Linearity	V_{bat}= 11V; V_O=28.8V; I_{set}= 20µA; PWM Freq = 200Hz	Figure 9
Output Ripple	V_O=28.8V; I_{set}= 20µA; PWM Freq = 200Hz; Duty = 50%	Figure 10
Switching Waveform	V_{bat}= 11V; I_{set}= 20µA	Figure 11
Output Ripple at PWM Dimming	V_{bat}= 11V; I_{set}= 20µA; PWM Freq = 200Hz; Duty = 50%; C_O=4.7µF	Figure 12
Short Circuit Protection	V_{bat}= 11V; I_{set}= 20µA	Figure 13
Open WLED Protection	V_{bat}= 11V; I_{set}= 20µA	Figure 14
Startup Waveform	V_{bat}= 11V; I_{set}= 20µA	Figure 15

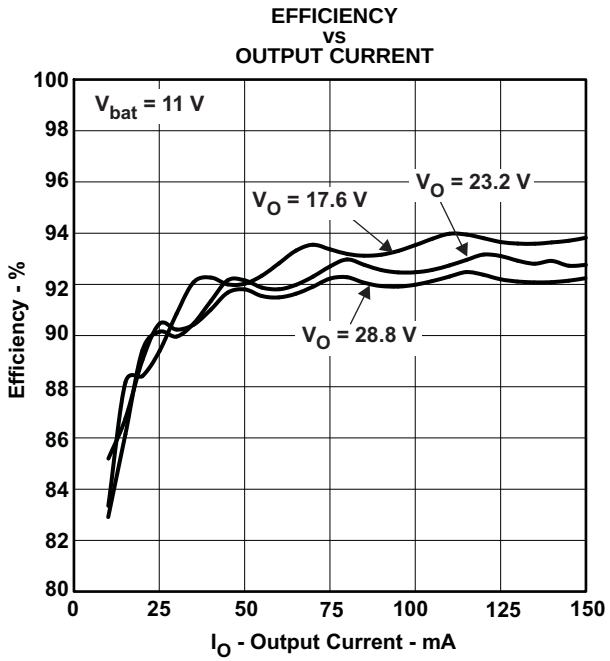

Figure 2.

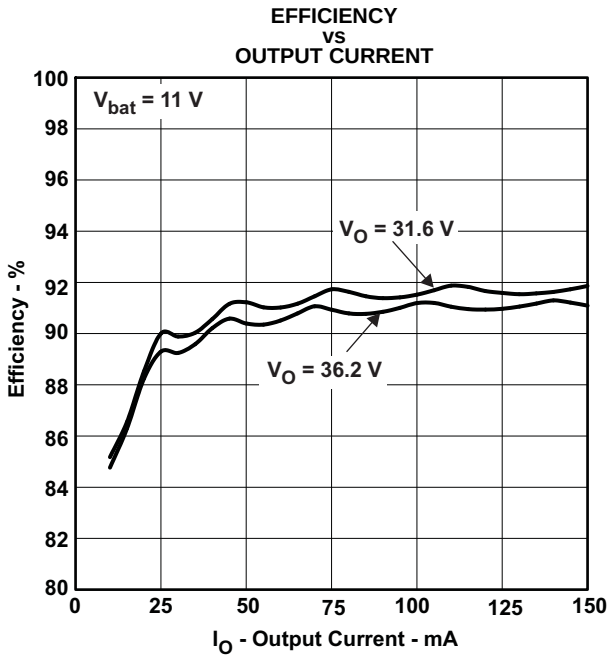

Figure 3.

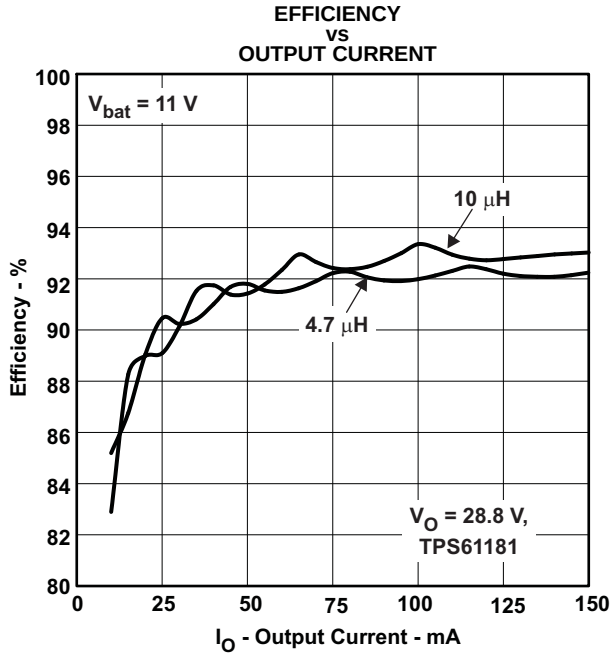

Figure 4.

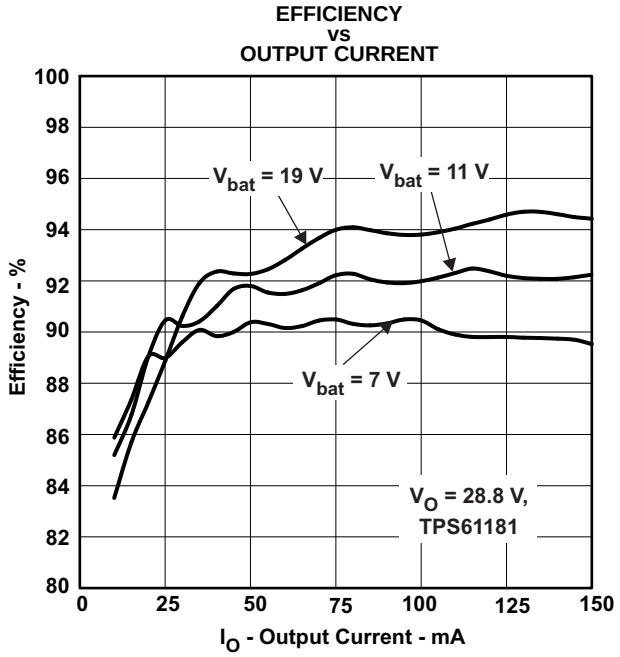

Figure 5.

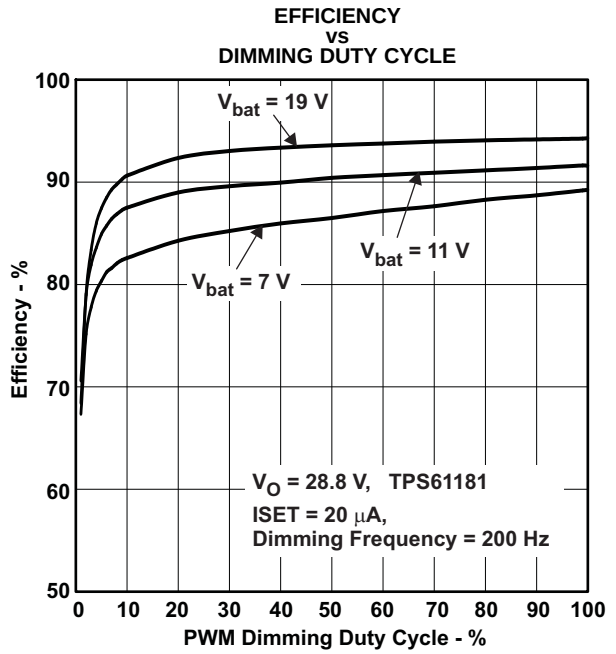

Figure 6.

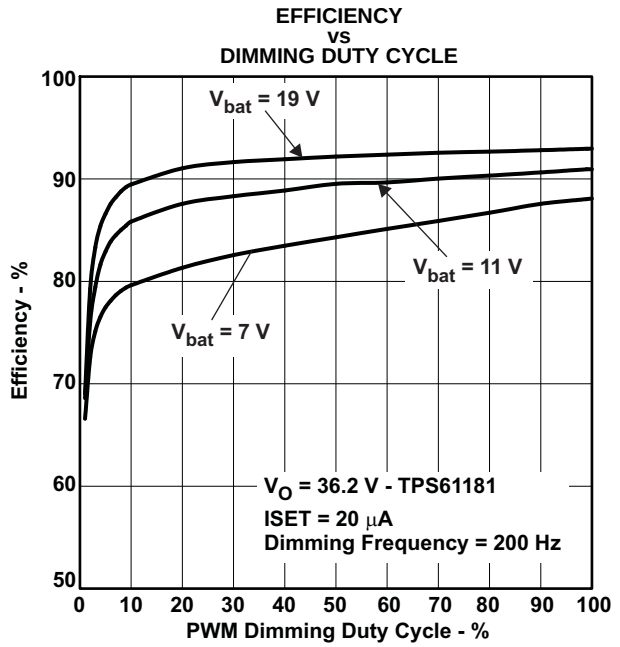

Figure 7.

Copyright © 2007–2013, Texas Instruments Incorporated

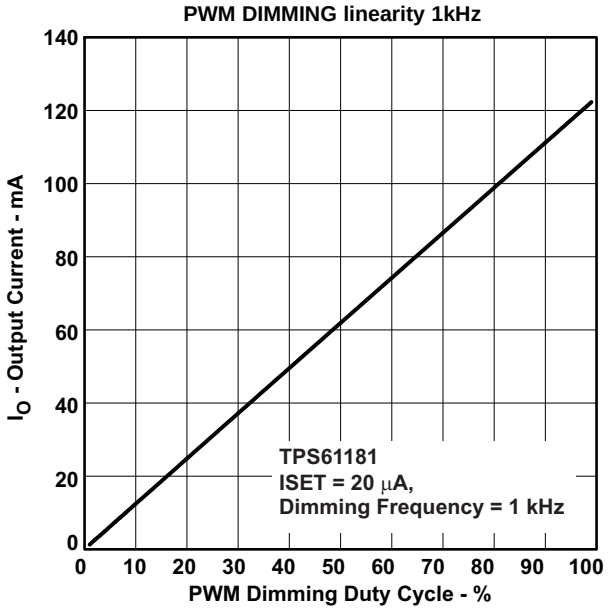

Figure 8.

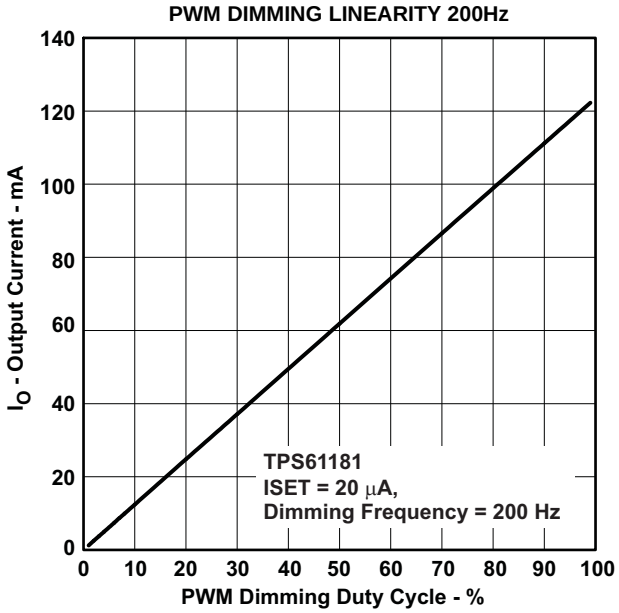

Figure 9.

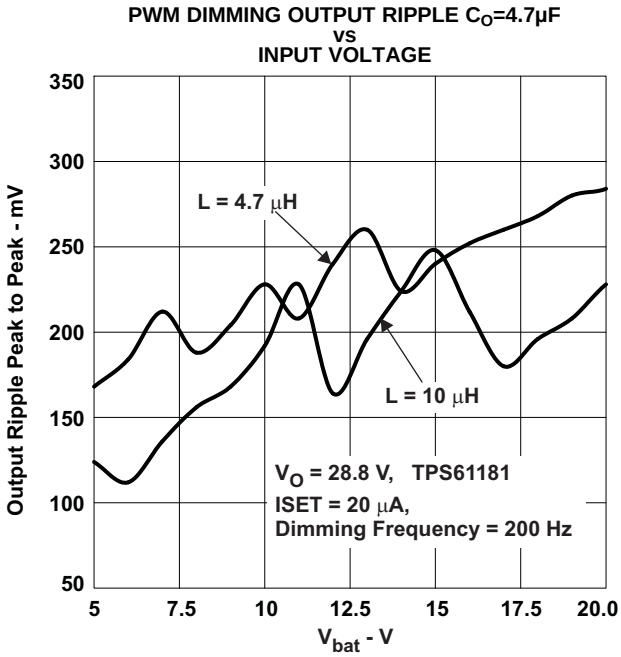

Figure 10.

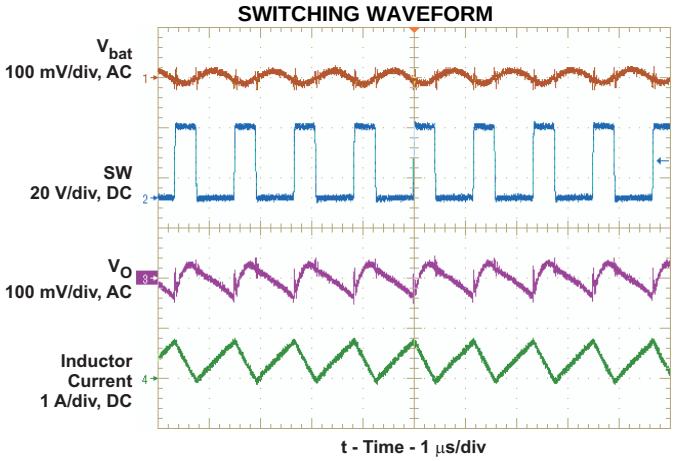

Figure 11.

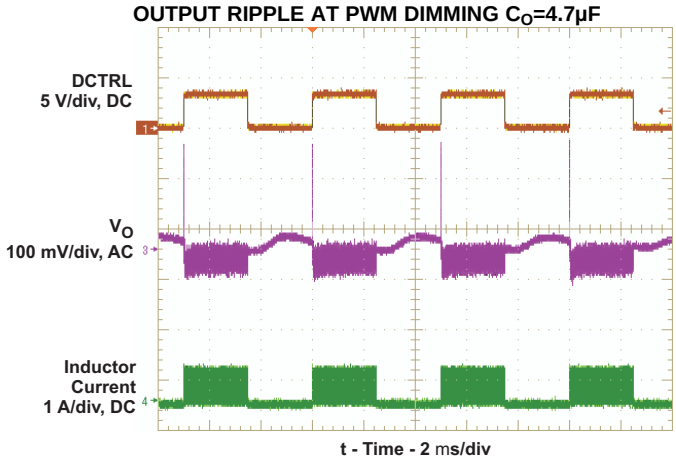

Figure 12.

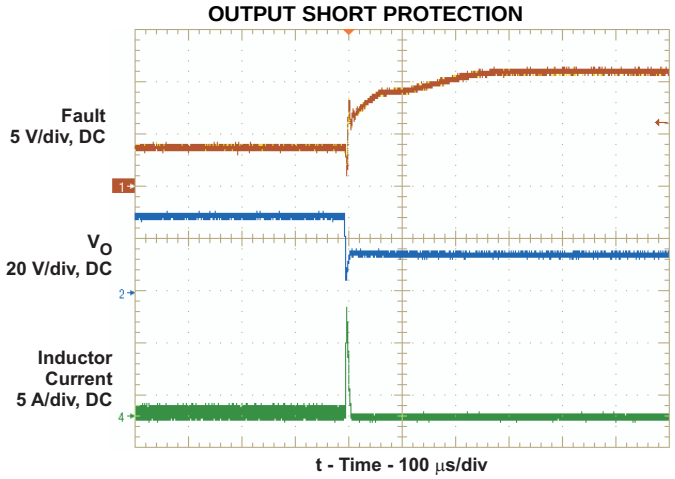

Figure 13.

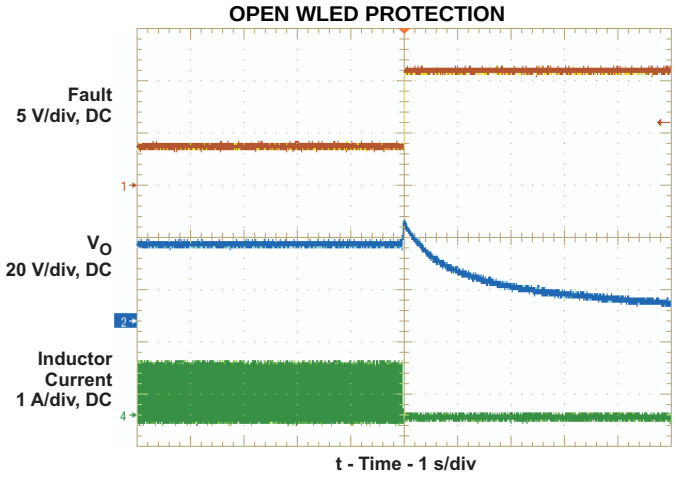

Figure 14.

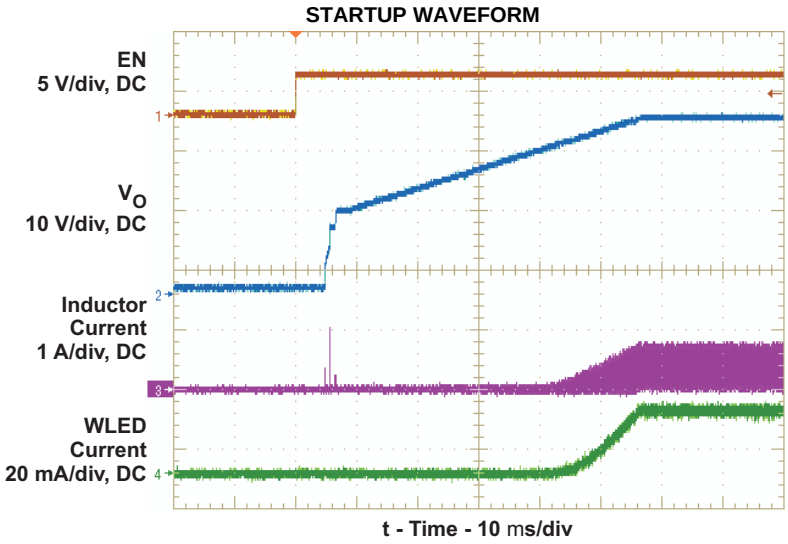

Figure 15.

Copyright © 2007–2013, Texas Instruments Incorporated

DETAILED DESCRIPTION

Recently, WLEDs have gained popularity as an alternative to CCFL for backlighting media size LCD displays. The advantages of WLEDs are power efficiency and low profile design. Due to the large number of WLEDs, they are often arranged in series and parallel, and powered by a boost regulator with multiple current sink regulators. Having more WLEDs in series reduces the number of parallel strings and therefore improves overall current matching. However, the efficiency of the boost regulator declines due to the need for high output voltage. Also, there have to be enough WLEDs in series to ensure the output voltage stays above the input voltage range. Otherwise, a buck-boost (for example, SEPIC) power converter has to be adopted which could be more expensive and complicated.

The TPS61180/1/2 family of ICs have integrated all the key function blocks to power and control up to 60 WLEDs. The devices include a 40V/1.5A boost regulator, six 25mA current sink regulators and protection circuit for over-current, over-voltage and short circuit failures. The key advantages of the devices are small solution size, low output AC ripple during PWM dimming control, and the capability to isolate the input and output during fault conditions.

SUPPLY VOLTAGE

The TPS61181/2 ICs have built-in LDO linear regulator to supply the IC analog and logic circuit. The LDO is powered up when the EN pin is high. The output of the LDO is connected to the Cin pin. A 0.1µF bypass capacitor is required for LDO's stable operation. Do not connect the Cin pin to the EN pin because this prevents the IC from starting up. In addition, avoid connecting the Cin pin to any other circuit as this could introduce noise into the IC supply voltage.

The TPS61180 has no built-in LDO linear regulator, and therefore requires an external supply voltage in the range of 2.7V to 3.6V connected to the Cin pin. The benefit of using external supply is to reduce the power losses incurred by the LDO as it provides the IC supply current. This loss could become a significant percentage of total output power under light load condition. The Cin pin has 2.2V (typical) under-voltage lock out which turns off the IC when the Cin pin voltage is below this threshold.

The voltage on the V_{BAT} pin is the reference for the pull-up circuit of the Fault pin. In addition, it also serves as the input signal to the short circuit protection. For TPS61181/2 ICs, the V_{BAT} connects to the input of the internal LDO, and powers the IC. There is an under-voltage lockout on the V_{BAT} pin which disables the IC when its voltage reduces to 4.2V (Typical). The IC restarts when the V_{BAT} pin voltage recovers by 300mV.

BOOST REGULATOR

The boost regulator is controlled by current mode PWM, and loop compensation is integrated inside the IC. The internal compensation ensures stable output over the full input and output voltage range. The TPS61180/1 switches at 1.0MHz, and the TPS61182 switches at 1.3MHz. The switching frequencies of the two devices, including their tolerance, due not over-lap. Therefore, in the unlikely event that one device creates electromagnetic inference to the system; the other device, switching at a different frequency, can provide an alternative solution.

The output voltage of the boost regulator is automatically set by the IC to minimize the voltage drop across the IFB pins. The IC automatically regulates the lowest IFB pin to 400mV, and consistently adjusts the boost output voltage to account for any changes of the LED forward voltages.

When the output voltage is too close to the input, the boost regulator may not be able to regulate the output due to the limitation of minimum duty cycle. In this case, increase the number of WLED in series or include series ballast resistors in order to provide enough headroom for the boost operation.

The TPS61180/1/2 boost regulators cannot regulate their outputs to voltages below 15V.

Copyright © 2007–2013, Texas Instruments Incorporated

CURRENT PROGRAM AND PWM DIMMING

The six current sink regulators can each provide maximum 25mA. The IFB current must be programmed to highest WLED current expected using the ISET pin resistor and the following Equation 1.

$$I_{FB} = K_{ISET} \frac{V_{ISET}}{R_{ISET}} \tag{1}$$

Where

K_{ISET} = Current multiple (1000 typical)

V_{ISET} = ISET pin voltage (1.229 V typical)

R_{ISET} = ISET pin resistor

The TPS61180/1/2 ICs have built-in precise current sink regulator. The current matching among 6 current sinks is below 2.5%. This means the differential value between the maximum and minimum current of the six current sinks divided by the average current of the six is less than 2.5%.

The WLED brightness is controlled by the PWM signal on the DCTRL pin. The frequency and duty cycle of the DCTRL signal is replicated on the IFB pin current. Keep the dimming frequency in the range of 100Hz to 1kHz to avoid screen flickering and maintain dimming linearity. Screen flickering may occur if the dimming frequency is below the range. The minimum achievable duty cycle increases with the dimming frequency. For example, while a 0.1% dimming duty cycle, giving a 1000:1 dimming range, is achievable at 100 Hz dimming frequency, only 1% duty cycle, giving a 100:1 dimming range, is achievable with a 1 KHz dimming frequency, and 5% dimming duty cycle is achievable with 5KHz dimming frequency. The device could work at high dimming frequency like 20 KHz, but only 15% duty cycle could be achievable. The TPS61180/1/2 ICs are designed to minimize the AC ripple on the output capacitor during PWM dimming. Careful passive component selection is also critical to minimize AC ripple on the output capacitor. See APPLICATION INFORMATION for more information.

ENABLE AND START UP

A logic high signal on the EN pin turns on the IC. For the TPS61181/2 ICs, taking EN high turns on the internal LDO linear regulator which provides supply IC current. For all devices, an internal resistor R_{start} (start up charging resistor) is connected between the V_{BAT} pin and V_O pin to charge the output capacitor toward Vin. The Fault pin outputs high during this time, and thus the external isolation PFET is turned off. Once the V_O pin voltage is within 2 V (isolation FET start up threshold) of the V_{BAT} pin voltage, R_{start} is open, and the Fault pin pulls down the gate of the PFET and connects the V_{BAT} voltage to the boost regulator. This operation is to prevent the in-rush current due to charging the output capacitor.

Once the isolation FET is turned on, the IC starts the PWM switching to raise the output voltage above V_{BAT}. Soft-start is implemented by gradually ramping up the reference voltage of the error amplifier to prevent voltage over-shoot and in-rush current. See the start-up waveform of a typical example, Figure 15.

Pulling the EN pin low for 32ms (typical) shuts down the IC, resulting in the IC consuming less than 50µA in the shutdown mode.

OVER-CURRENT, OVER-VOLTAGE AND SHORT-CIRCUIT PROTECTION

The TPS61180/1/2 family has pulse by pulse over-current limit of 1.5A (min). The PWM switch turns off when the inductor current reaches this current threshold. The PWM switch remains off until the beginning of the next switching cycle. This protects the IC and external component under over-load conditions. When there is sustained over-current condition for more than 16ms (under 100% dimming duty cycle), the IC turns off and requires PER or the EN pin toggling to restart.

Under severe over-load and/or short circuit conditions, the V_O pin can be pulled below the input (V_{BAT} pin). Under this condition, the current can follow directly from input to output through the inductor and Schottky diode. Turning off the PWM switch alone does not limit current anymore. In this case, the TPS61180/1/2 ICs detect the output voltage is 1V (short circuit detection threshold) below the input voltage, turns off the isolation FET, and shuts down the IC. The IC restarts after input power-on reset (V_{BAT} POR) or EN pin logic toggling.

During the IC start up, if there is short circuit condition on the boost converter output, the output capacitor will not be charged to within 2V of V_{BAT} through R_{start}. After 32ms (short circuit detection delay during start up), the IC shuts down and does not restart until there is V_{BAT} POR or EN pin toggling. The isolation FET is never turned on under the condition.

Copyright © 2007–2013, Texas Instruments Incorporated

For the TPS61181/2 ICs, if one of the WLED strings is open, the boost output rises to over-voltage threshold (39V typical). The IC detects the open WLED string by sensing no current in the corresponding IFB pin. As a result, the IC removes the open IFB pin from the voltage feedback loop. Subsequently, the output voltage drops down and is regulated to a voltage for the connected WLED strings. The IFB current of the connected WLED string keeps in regulation during the whole transition. The IC only shuts down if it detects that all of the WLED strings are open.

For the TPS61180, if the IC detects any open WLED string, the IC shuts down and remains off until there is V_{BAT} POR or EN pin toggling.

For all the devices, if the over-voltage threshold is reached, but the current sensed on the IFB pin is below the regulation target, the IC regulates the boost output at the over-voltage threshold. This operation could occur when the WLED is turned on under cold temperature, and the forward voltages of the WLEDs exceed the over-voltage threshold. Maintaining the WLED current allows the WLED to warm up and their forward voltages to drop below the over-voltage threshold.

For the TPS61181/2 ICs, if any IFB pin voltage exceeds IFB over-voltage threshold (17V typical), the IC turns off the corresponding current sink and removes this IFB pin from V_O regulation loop. The remaining IFB pins' current regulation is not affected. This condition often occurs when there are several shorted WLEDs in one string. WLED mismatch typically does not create such large voltage difference among WLED strings.

For the TPS61180 IC, if any IFB pin voltage exceeds IFB over-voltage threshold, the IC shuts down and remains off until there is V_{BAT} POR or EN pin toggling.

IFB PIN UNUSED

If the application requires less than 6 WLED strings, one can easily disable unused IFB pins. The TPS61181/2 ICs simply require leaving the unused IFB pin open or shorting it to ground. If the IFB pin is open, the boost output voltage ramps up to V_O over-voltage threshold during start up. The IC then detects the zero current string, and removes it from the feedback loop. If the IFB pin is shorted to ground, the IC detects the short immediately after IC enable, and the boost output voltage does not go up to V_O over-voltage threshold. Instead, it ramps to the regulation voltage after soft start.

For the TPS61180, connect a 10 kΩ resistor from the unused IFB pin to ground. After the device is enabled, the IC detects the resistor and disables the IFB pin from the feedback loop.

Copyright © 2007–2013, Texas Instruments Incorporated

APPLICATION INFORMATION

INDUCTOR SELECTION

Because the selection of the inductor affects power supply's steady state operation, transient behavior and loop stability, the inductor is the most important component in switching power regulator design. There are three specifications most important to the performance of the inductor, inductor value, DC resistance and saturation current. The TPS61180/1/2 ICs are designed to work with inductor values between 4.7µH and 10µH. A 4.7µH inductor could be available in a smaller or lower profile package, while 10µH may produce higher efficiency due to lower inductor ripple. If the boost output current is limited by the over-current protection of the IC, using a 10µH inductor can offer higher output current.

The internal loop compensation for the PWM control is optimized for the recommended component values, including typical tolerances. Inductor values can have ±20% tolerance with no current bias. When the inductor current approaches saturation level, its inductance can decrease 20 to 35% from the 0A value depending on how the inductor vendor defines saturation

In a boost regulator, the inductor DC current can be calculated as

$$I_{dc} = \frac{V_O \times I_O}{V_{in} \times \eta} \tag{2}$$

Where

V_O = boost output voltage

Io = boost output current

V_{in} = boost input voltage

η = power conversion efficiency, use 90% for TPS61180/1/2 applications

The inductor current peak to peak ripple can be calculated as

$$I_{pp} = \frac{1}{L \times \left(\frac{1}{V_O - V_{bat}} + \frac{1}{V_{bat}}\right) \times F_S} \tag{3}$$

Where

I_{pp} = inductor peak to peak ripple

L = inductor value

F_s= Switching frequency

V_{bat}= boost input voltage

Therefore, the peak current seen by the inductor is

$$I_p = I_{dc} + \frac{I_{pp}}{2} \tag{4}$$

Select the inductor with saturation current over the calculated peak current. To calculate the worse case inductor peak current, use minimum input voltage, maximum output voltage and maximum load current.

Regulator efficiency is dependent on the resistance of its high current path, switching losses associated with the PWM switch and power diode. Although the TPS61180/1/2 ICs have optimized the internal switch resistance, the overall efficiency still relies on the DC resistance (DCR) of the inductor; lower DCR improves efficiency. However, there is a trade off between DCR and inductor footprint. Furthermore, shielded inductors typically have a higher DCR than unshielded ones. Table 1 lists recommended inductor models.

Copyright © 2007–2013, Texas Instruments Incorporated

Table 1. Recommended Inductor for TPS61180/1/2

	L (µH)	DCR Typ (mΩ)	I_{sat} (A)	Size (LXWXH mm)
TOKO				
A915AY-4R7M	4.7	38	1.87	5.2x5.2x3.0
A915AY-100M	10	75	1.24	5.2x5.2x3.0
TDK				
SLF6028T-4R7M1R6	4.7	28.4	1.6	6.0x6.0x2.8
SLF6028T-100M1R3	10	53.2	1.3	6.0x6.0x2.8

OUTPUT CAPACITOR SELECTION

During PWM brightness dimming, the load transient causes voltage ripple on the output capacitor. Since the PWM dimming frequency is in the audible frequency range, the ripple can produce audible noises on the output ceramic capacitor. There are two ways to reduce or eliminate this audible noise. The first option is to select PWM dimming frequency outside the audible range. This means the dimming frequency needs be to lower than 200Hz or higher than 30KHz. The potential issue with low dimming frequency is that WLED on/off can become visible and thus cause a flickering effect on the display. On the other hand, high dimming frequency can compromise the dimming range since the LED current accuracy and current match are difficult to maintain at low dimming duty cycle. The TPS61180/1/2 ICs can support minimum 1% dimming duty cycle up to 1KHz dimming frequency. The second option is to reduce the amount of the output ripple, and therefore minimize the audible noise.

The TPS61180/1/2 ICs adopt a patented technology to limit output ripple even with small output capacitance. In a typical application, the output ripple is less than 200mV during PWM dimming with 4.7µF output capacitor, and the audible noise is not noticeable. The devices are designed to be stable with output capacitor down to 1.0µF. However, the output ripple can increase with lower output capacitor.

Care must be taken when evaluating a ceramic capacitor's derating due to applied dc voltage, aging and over frequency. For example, larger form factor capacitors (in 1206 size) have their self resonant frequencies in the switching frequency range of the TPS61180/1/2. So the effective capacitance is significantly lower. Therefore, it may be necessary to use small capacitors in parallel instead of one large capacitor.

ISOLATION MOSFET SELECTION

The TPS61180/1/2 ICs provide a gate driver to an external P channel MOSFET which can be turned off during device shutdown or fault condition. This MOSFET can provide a true shutdown function, and also protect the battery from output short circuit conditions. The source of the PMOS should be connected to the input, and a pull up resistor is required between the source and gate of the FET to keep the FET off during IC shutdown. To turn on the isolation FET, the Fault pin is pulled low, and clamped at 8 V below the V_{BAT} pin voltage.

During device shutdown or fault condition, the isolation FET is turned off, and the input voltage is applied on the isolation MOSFET. During short circuit condition, the catch diode (D2 in typical application circuit) is forward biased when the isolation FET is turned off. The drain of the isolation FET swings below ground. The voltage cross the isolation FET can be momentarily greater than the input voltage. Therefore, select 30V PMOS for 24V maximum input. The on resistor of the FET has large impact on power conversion efficiency since the FET carries the input voltage. Select a MOSFET with $R_{ds(on)}$ less than 100mΩ to limit the power losses.

AUDIBLE NOISE REDUCTION

Ceramic capacitors can produce audible noise if the frequency of its AC voltage ripple is in the audible frequency range. In TPS61180/1/2 applications, both input and output capacitors are subject to AC voltage ripple during PWM brightness dimming. The ICs integrate a patented technology to minimize the ripple voltage, and thus audible noises.

To further reduce the audible noise, one effective way is to use two or three small size capacitors in parallel instead of one large capacitor. The application circuit in Figure 16 uses two 2.2-µF/25V ceramic capacitors at the input and two 1-µF/50V ceramic capacitors at the output. All of the capacitors are in 0805 package. Although the output ripple during PWM dimming is higher than one 4.7µF in a 1206 package, the overall audible noise is lower.

Copyright © 2007–2013, Texas Instruments Incorporated

In addition, connecting a 10-nF/50V ceramic capacitor between the V_O pin and IFB1 pin can further reduce the output AC ripple during the PWM dimming. Since this capacitor is subject to large AC ripple, choose a small package such as 0402 to prevent it from producing noise.

LAYOUT CONSIDERATION

As for all switching power supplies, especially those providing high current and using high switching frequencies, layout is an important design step. If layout is not carefully done, the regulator could show instability as well as EMI problems. Therefore, use wide and short traces for high current paths. The input capacitor, C3 in the typical application circuit, needs not only to be close to the V_{BAT} pin, but also to the GND pin in order to reduce the input ripple seen by the IC. The input capacitor, C1 in the typical application circuit, should be placed close to the inductor. The SW pin carries high current with fast rising and falling edges. Therefore, the connection between the pin to the inductor and Schottky should be kept as short and wide as possible. It is also beneficial to have the ground of the output capacitor C2 close to the PGND pin since there is large ground return current flowing between them. When laying out signal ground, it is recommended to use short traces separated from power ground traces, and connect them together at a single point, for example on the thermal pad.

Thermal pad needs to be soldered on to the PCB and connected to the GND pin of the IC. Additional thermal via can significantly improve power dissipation of the IC.

ADDITIONAL APPLICATION CIRCUITS

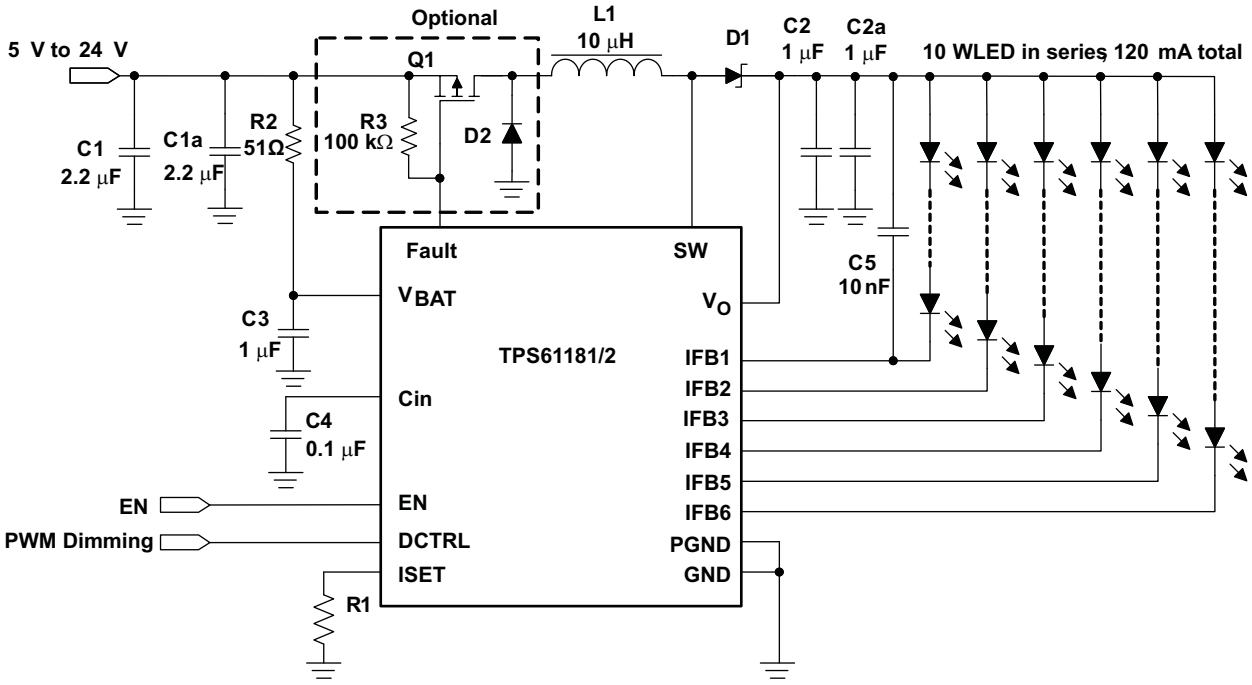

C1, C1a: Murata GRM219R61E225K
C2, C2a: Murata GRM21BR71H105K
C3: Murata GRM21BR71H105K
C4: Murata GRM185R61A105K
C5: Murata GRM155R71H103K

L1: TOKO A915AY-100M
D1: VISHAY SS2P5-E3/84A

Figure 16. Audible Noise Reduction Circuit

Copyright © 2007–2013, Texas Instruments Incorporated

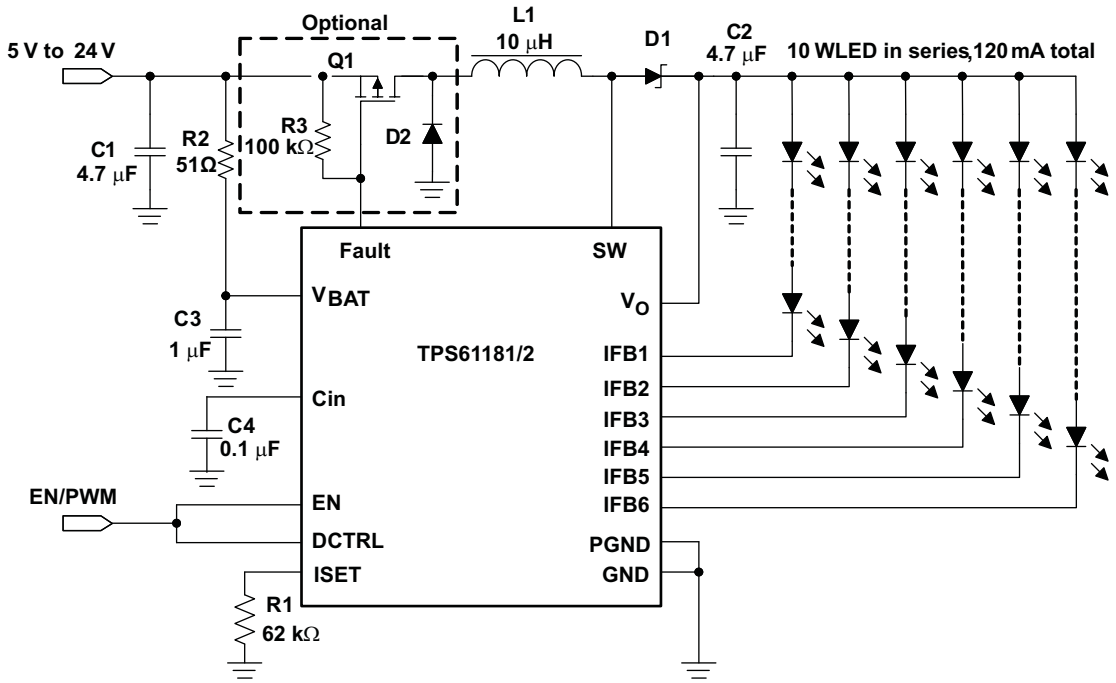

Figure 17. Single Input Control Circuit

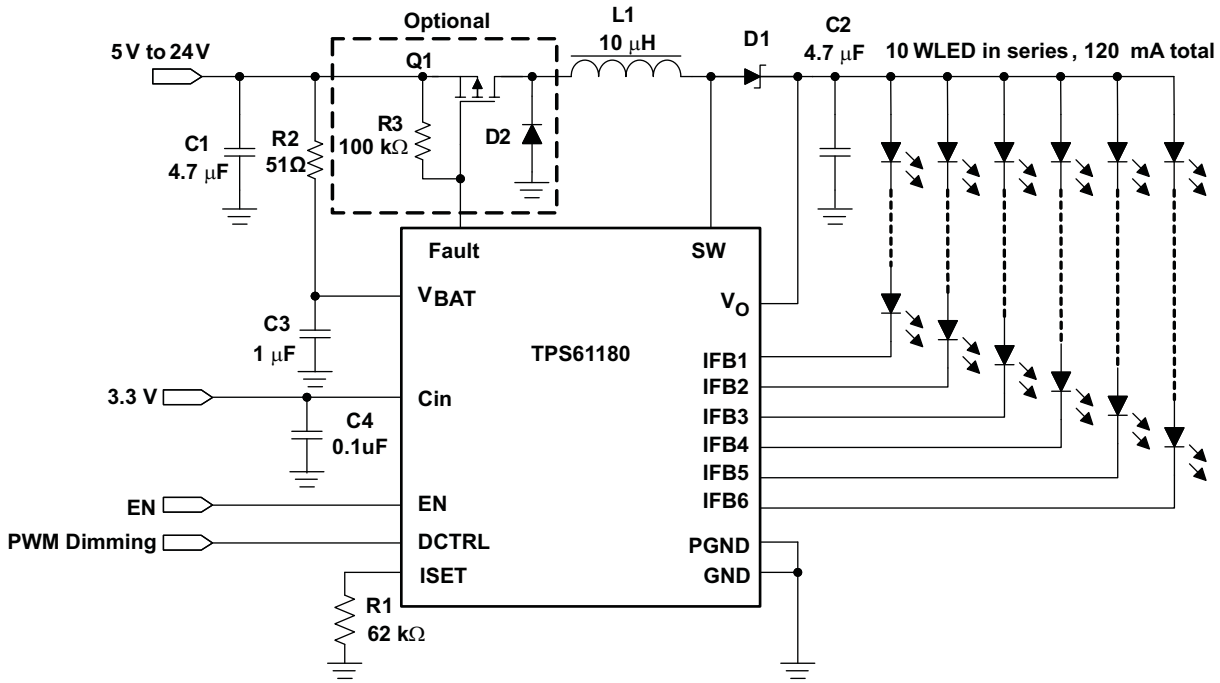

Figure 18. TPS61180 Typical Application

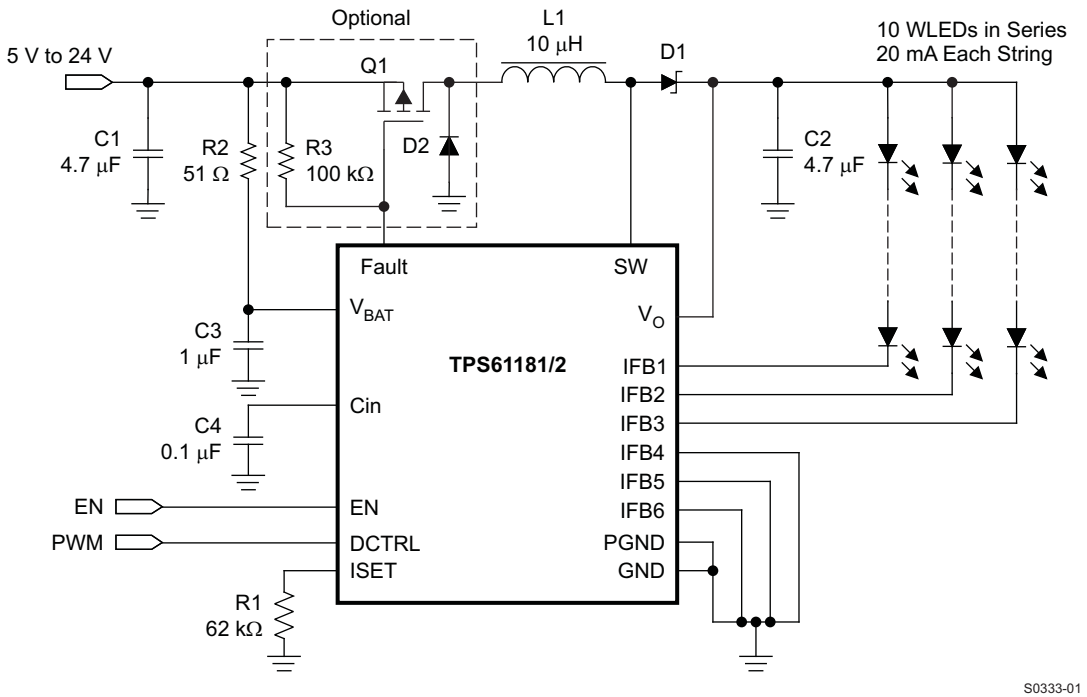

Figure 19. TSP61181/2 for Three Strings of LEDs

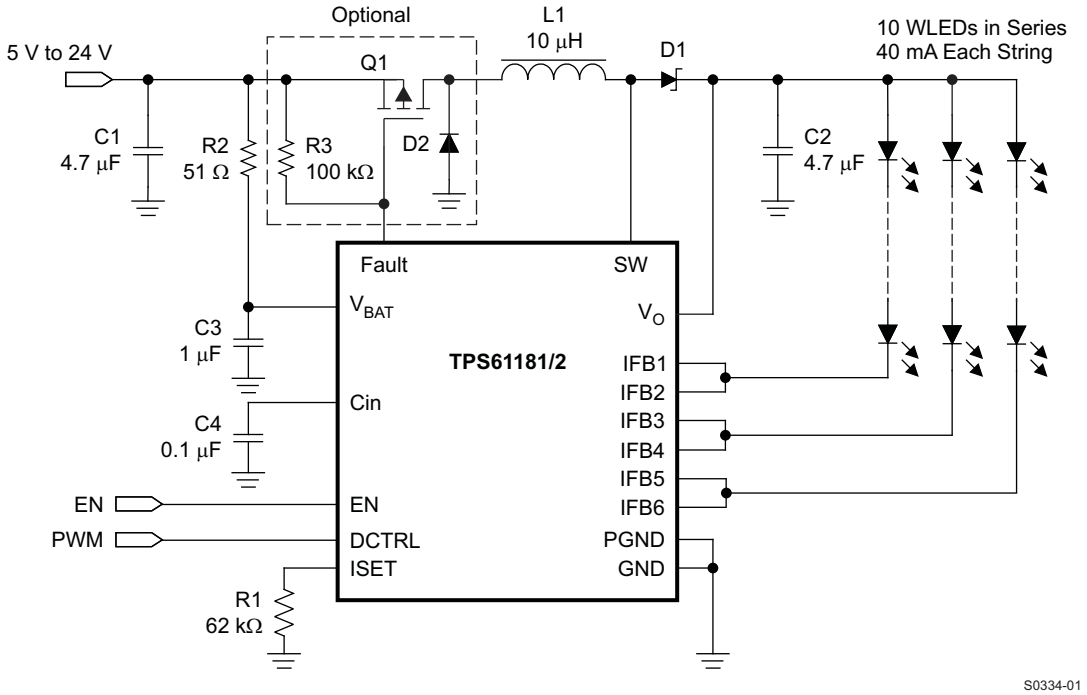

Figure 20. TSP61181/2 for Three Strings of LEDs with Double Current

Copyright © 2007–2013, Texas Instruments Incorporated

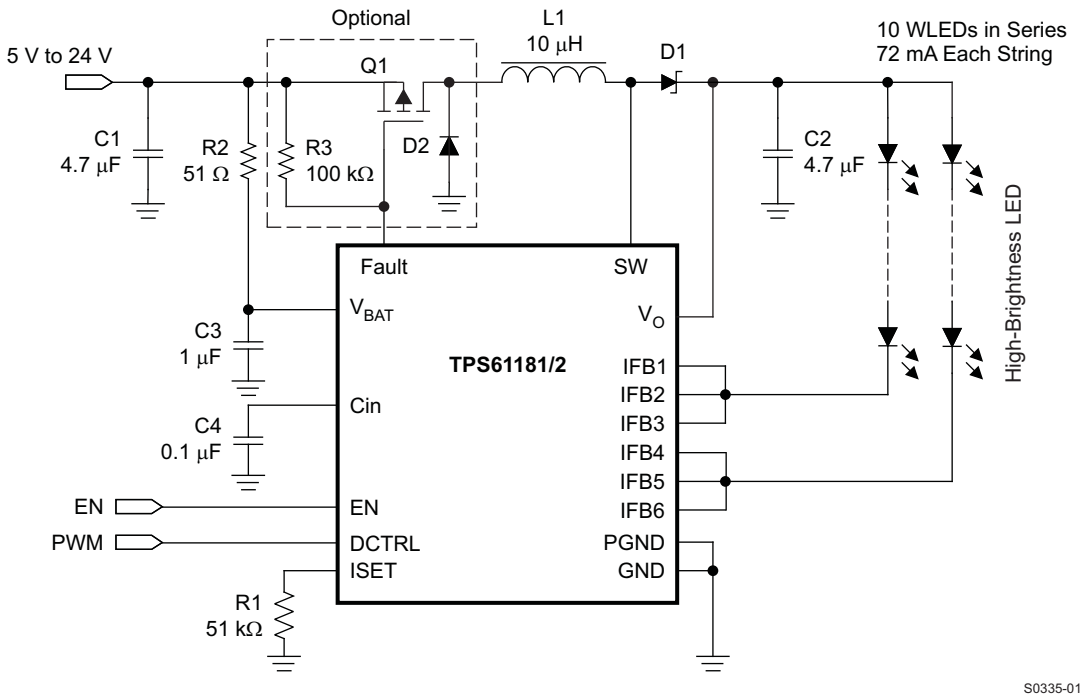

Figure 21. TSP61181/2 for Two Strings High Brightness LEDs Application

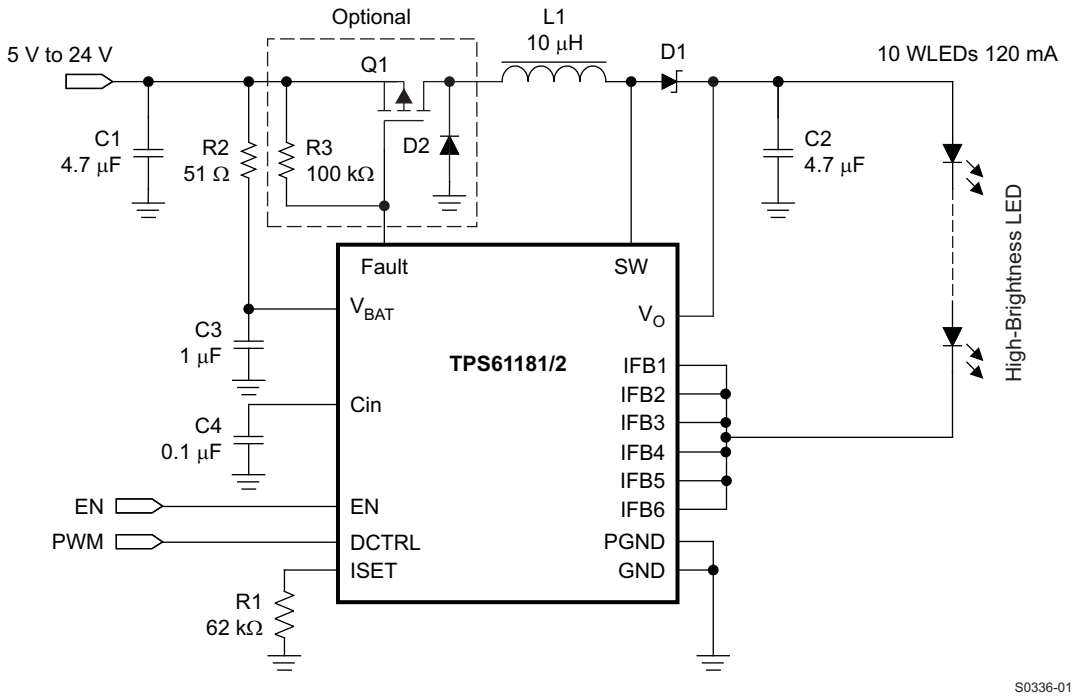

Figure 22. TSP61181/2 for One String High Brightness LEDs Application

REVISION HISTORY

Changes from Revision C (April 2009) to Revision D **Page**

- Added to ELEC CHARA table, sub section POWER SWITCH: first row, TEST CONDITIONS Col: V_{CC} = 3.3 V for TPS61180 5

Changes from Revision D (February 2012) to Revision E **Page**

- Changed D_{min} spec from 7% MAX to 8% for TPS61182 in Elec Char table. 6

Copyright © 2007–2013, Texas Instruments Incorporated

PACKAGING INFORMATION

Orderable part number	Status (1)	Material type (2)	Package | Pins	Package qty | Carrier	RoHS (3)	Lead finish/ Ball material (4)	MSL rating/ Peak reflow (5)	Op temp (°C)	Part marking (6)
TPS61180RTER	Active	Production	WQFN (RTE) | 16	3000 | LARGE T&R	Yes	NIPDAU	Level-2-260C-1 YEAR	-40 to 85	CCG
TPS61180RTER.B	Active	Production	WQFN (RTE) | 16	3000 | LARGE T&R	Yes	NIPDAU	Level-2-260C-1 YEAR	-40 to 85	CCG
TPS61180RTET	Active	Production	WQFN (RTE) | 16	250 | SMALL T&R	Yes	NIPDAU	Level-2-260C-1 YEAR	-40 to 85	CCG
TPS61180RTET.B	Active	Production	WQFN (RTE) | 16	250 | SMALL T&R	Yes	NIPDAU	Level-2-260C-1 YEAR	-40 to 85	CCG
TPS61181RTER	Active	Production	WQFN (RTE) | 16	3000 | LARGE T&R	Yes	NIPDAU	Level-2-260C-1 YEAR	-40 to 85	CCH
TPS61181RTER.B	Active	Production	WQFN (RTE) | 16	3000 | LARGE T&R	Yes	NIPDAU	Level-2-260C-1 YEAR	-40 to 85	CCH
TPS61181RTET	Active	Production	WQFN (RTE) | 16	250 | SMALL T&R	Yes	NIPDAU	Level-2-260C-1 YEAR	-40 to 85	CCH
TPS61181RTET.B	Active	Production	WQFN (RTE) | 16	250 | SMALL T&R	Yes	NIPDAU	Level-2-260C-1 YEAR	-40 to 85	CCH
TPS61182RTER	Active	Production	WQFN (RTE) | 16	3000 | LARGE T&R	Yes	NIPDAU	Level-2-260C-1 YEAR	-40 to 85	CCI
TPS61182RTER.B	Active	Production	WQFN (RTE) | 16	3000 | LARGE T&R	Yes	NIPDAU	Level-2-260C-1 YEAR	-40 to 85	CCI
TPS61182RTERG4	Active	Production	WQFN (RTE) | 16	3000 | LARGE T&R	Yes	NIPDAU	Level-2-260C-1 YEAR	-40 to 85	CCI
TPS61182RTERG4.B	Active	Production	WQFN (RTE) | 16	3000 | LARGE T&R	Yes	NIPDAU	Level-2-260C-1 YEAR	-40 to 85	CCI
TPS61182RTET	Active	Production	WQFN (RTE) | 16	250 | SMALL T&R	Yes	NIPDAU	Level-2-260C-1 YEAR	-40 to 85	CCI
TPS61182RTET.B	Active	Production	WQFN (RTE) | 16	250 | SMALL T&R	Yes	NIPDAU	Level-2-260C-1 YEAR	-40 to 85	CCI

(1) **Status:** For more details on status, see our product life cycle.

(2) **Material type:** When designated, preproduction parts are prototypes/experimental devices, and are not yet approved or released for full production. Testing and final process, including without limitation quality assurance, reliability performance testing, and/or process qualification, may not yet be complete, and this item is subject to further changes or possible discontinuation. If available for ordering, purchases will be subject to an additional waiver at checkout, and are intended for early internal evaluation purposes only. These items are sold without warranties of any kind.

(3) **RoHS values:** Yes, No, RoHS Exempt. See the TI RoHS Statement for additional information and value definition.

(4) **Lead finish/Ball material:** Parts may have multiple material finish options. Finish options are separated by a vertical ruled line. Lead finish/Ball material values may wrap to two lines if the finish value exceeds the maximum column width.

(5) **MSL rating/Peak reflow:** The moisture sensitivity level ratings and peak solder (reflow) temperatures. In the event that a part has multiple moisture sensitivity ratings, only the lowest level per JEDEC standards is shown. Refer to the shipping label for the actual reflow temperature that will be used to mount the part to the printed circuit board.

(6) **Part marking:** There may be an additional marking, which relates to the logo, the lot trace code information, or the environmental category of the part.

Multiple part markings will be inside parentheses. Only one part marking contained in parentheses and separated by a "~" will appear on a part. If a line is indented then it is a continuation of the previous line and the two combined represent the entire part marking for that device.

Important Information and Disclaimer: The information provided on this page represents TI's knowledge and belief as of the date that it is provided. TI bases its knowledge and belief on information provided by third parties, and makes no representation or warranty as to the accuracy of such information. Efforts are underway to better integrate information from third parties. TI has taken and continues to take reasonable steps to provide representative and accurate information but may not have conducted destructive testing or chemical analysis on incoming materials and chemicals. TI and TI suppliers consider certain information to be proprietary, and thus CAS numbers and other limited information may not be available for release.

In no event shall TI's liability arising out of such information exceed the total purchase price of the TI part(s) at issue in this document sold by TI to Customer on an annual basis.

TAPE AND REEL INFORMATION

REEL DIMENSIONS

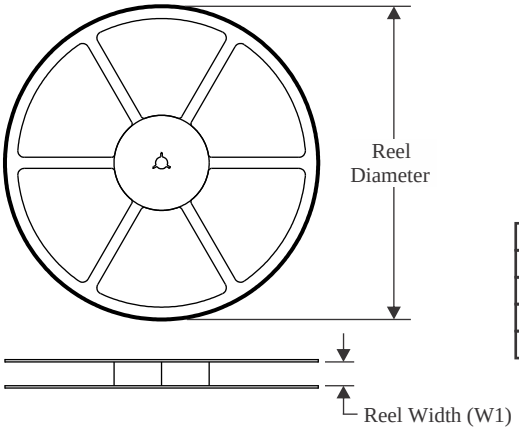

TAPE DIMENSIONS

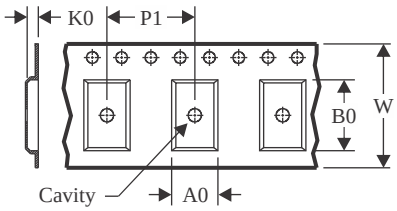

A0	Dimension designed to accommodate the component width
B0	Dimension designed to accommodate the component length
K0	Dimension designed to accommodate the component thickness
W	Overall width of the carrier tape
P1	Pitch between successive cavity centers

QUADRANT ASSIGNMENTS FOR PIN 1 ORIENTATION IN TAPE

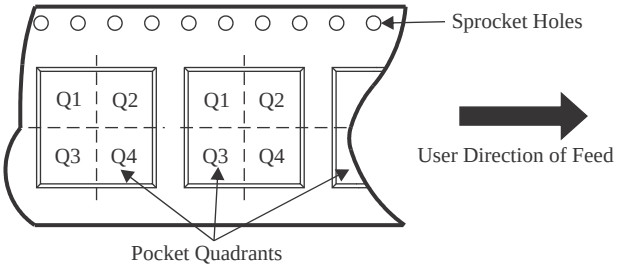

*All dimensions are nominal

Device	Package Type	Package Drawing	Pins	SPQ	Reel Diameter (mm)	Reel Width W1 (mm)	A0 (mm)	B0 (mm)	K0 (mm)	P1 (mm)	W (mm)	Pin1 Quadrant
TPS61180RTER	WQFN	RTE	16	3000	330.0	12.4	3.3	3.3	1.1	8.0	12.0	Q2
TPS61180RTET	WQFN	RTE	16	250	180.0	12.4	3.3	3.3	1.1	8.0	12.0	Q2
TPS61181RTER	WQFN	RTE	16	3000	330.0	12.4	3.3	3.3	1.1	8.0	12.0	Q2
TPS61181RTET	WQFN	RTE	16	250	180.0	12.4	3.3	3.3	1.1	8.0	12.0	Q2
TPS61181RTET	WQFN	RTE	16	250	180.0	12.4	3.3	3.3	1.1	8.0	12.0	Q2
TPS61182RTER	WQFN	RTE	16	3000	330.0	12.4	3.3	3.3	1.1	8.0	12.0	Q2
TPS61182RTERG4	WQFN	RTE	16	3000	330.0	12.4	3.3	3.3	1.1	8.0	12.0	Q2
TPS61182RTET	WQFN	RTE	16	250	180.0	12.4	3.3	3.3	1.1	8.0	12.0	Q2

TAPE AND REEL BOX DIMENSIONS

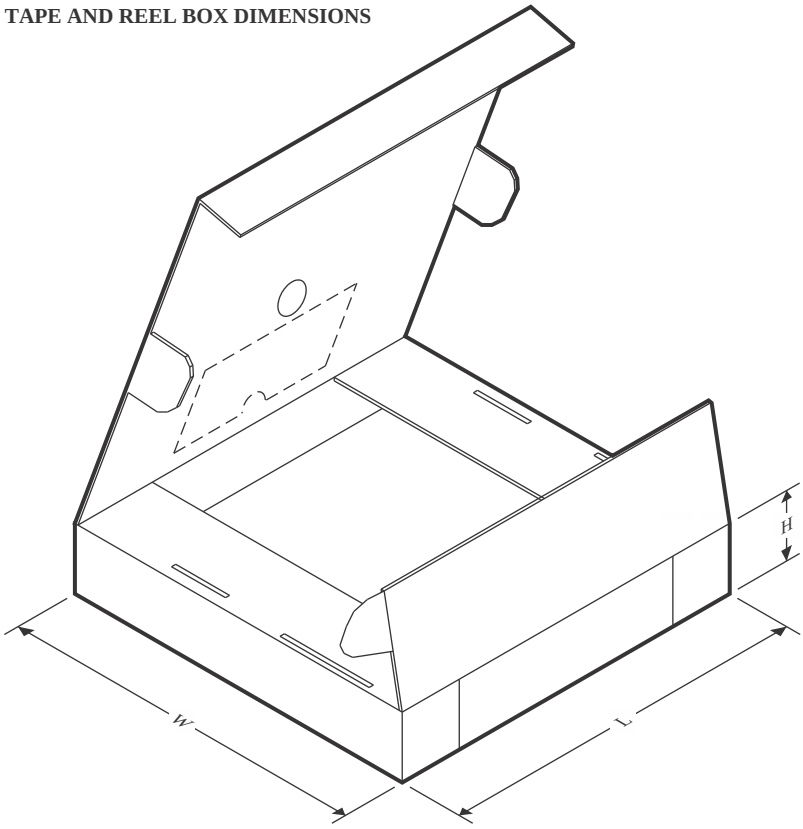

*All dimensions are nominal

Device	Package Type	Package Drawing	Pins	SPQ	Length (mm)	Width (mm)	Height (mm)
TPS61180RTER	WQFN	RTE	16	3000	356.0	356.0	35.0
TPS61180RTET	WQFN	RTE	16	250	210.0	185.0	35.0
TPS61181RTER	WQFN	RTE	16	3000	356.0	356.0	35.0
TPS61181RTET	WQFN	RTE	16	250	210.0	185.0	35.0
TPS61181RTET	WQFN	RTE	16	250	210.0	185.0	35.0
TPS61182RTER	WQFN	RTE	16	3000	356.0	356.0	35.0
TPS61182RTERG4	WQFN	RTE	16	3000	356.0	356.0	35.0
TPS61182RTET	WQFN	RTE	16	250	210.0	185.0	35.0

GENERIC PACKAGE VIEW

RTE 16

WQFN - 0.8 mm max height

3 x 3, 0.5 mm pitch

PLASTIC QUAD FLATPACK - NO LEAD

This image is a representation of the package family, actual package may vary.
Refer to the product data sheet for package details.

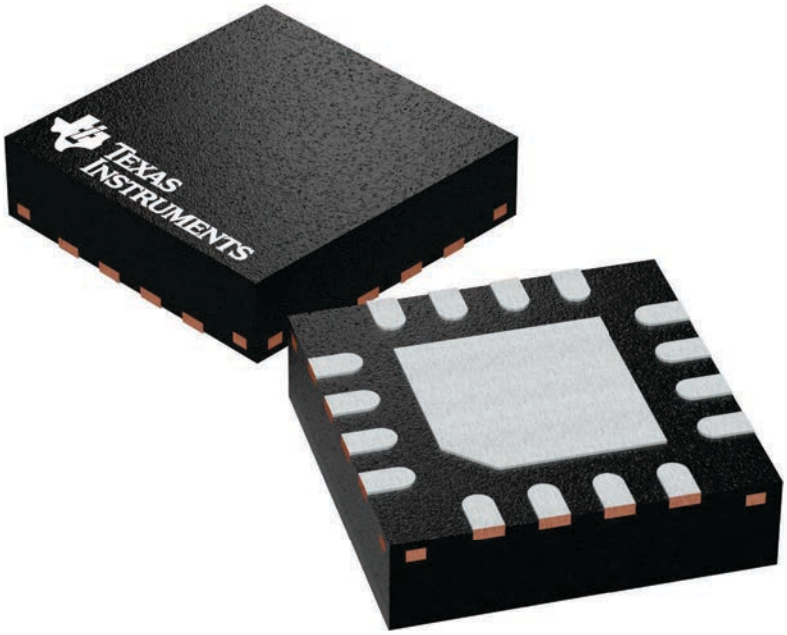

4225944/A

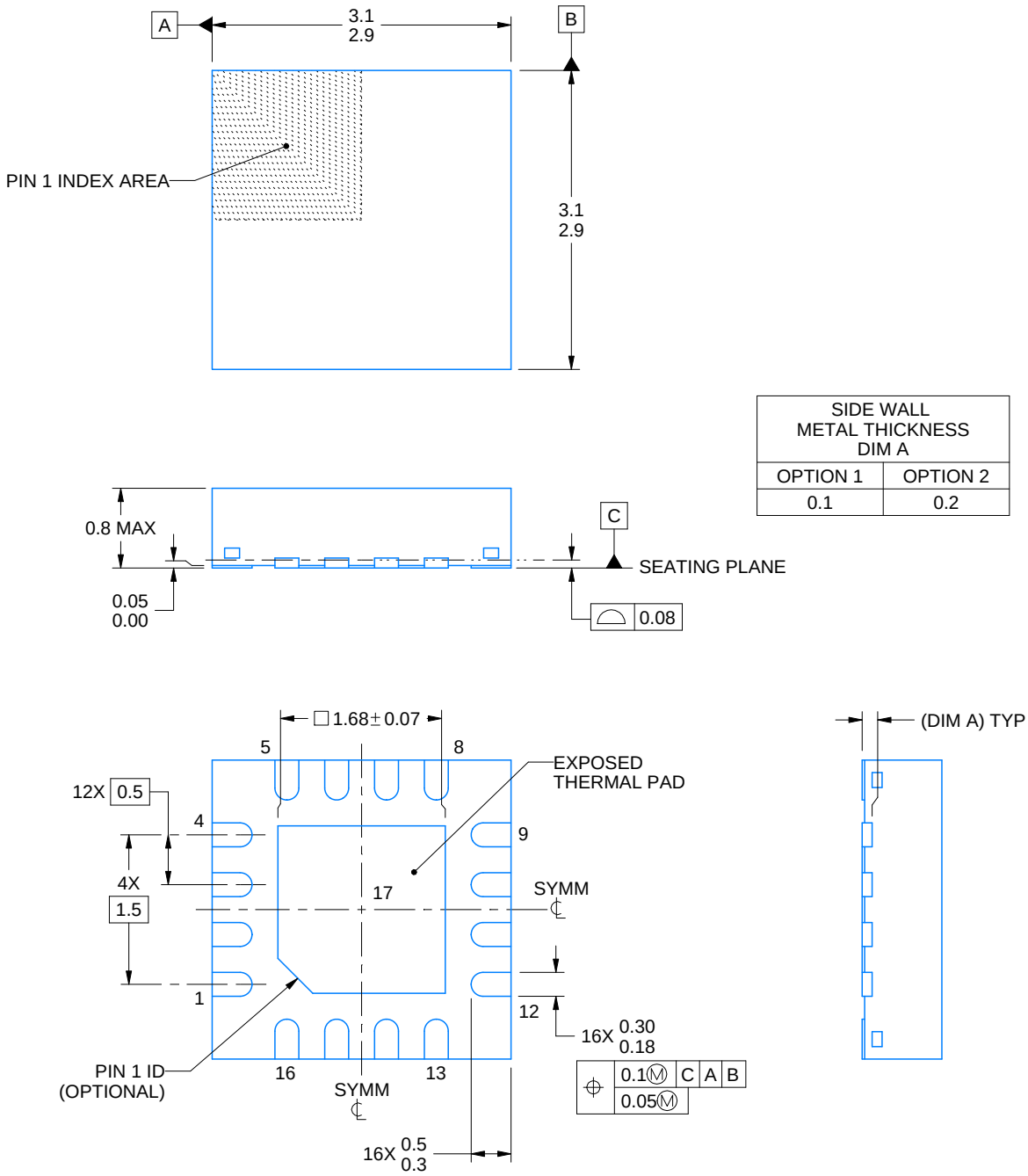

SIDE WALL METAL THICKNESS DIM A	
OPTION 1	OPTION 2
0.1	0.2

NOTES:

1. All linear dimensions are in millimeters. Any dimensions in parenthesis are for reference only. Dimensioning and tolerancing per ASME Y14.5M.
2. This drawing is subject to change without notice.
3. The package thermal pad must be soldered to the printed circuit board for thermal and mechanical performance.

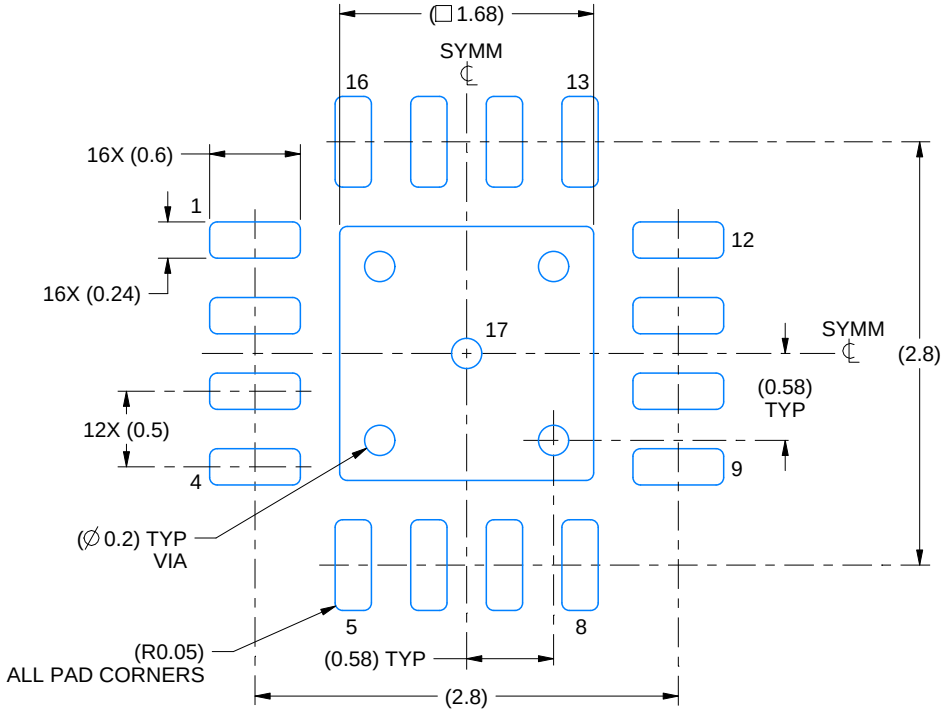

LAND PATTERN EXAMPLE
EXPOSED METAL SHOWN
SCALE:20X

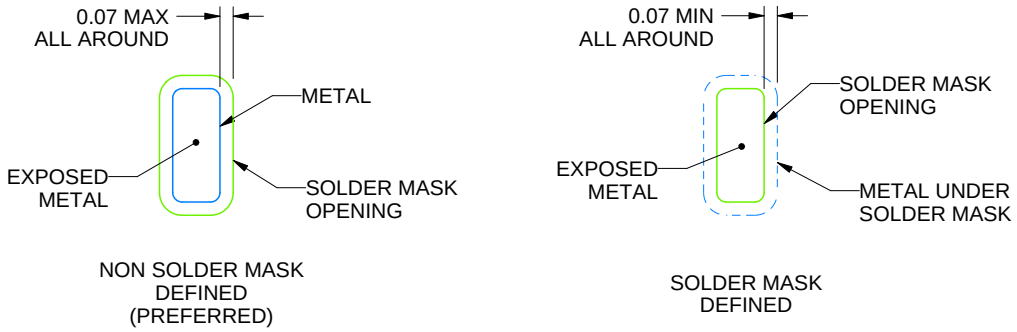

SOLDER MASK DETAILS

4219117/B 04/2022

NOTES: (continued)

4. This package is designed to be soldered to a thermal pad on the board. For more information, see Texas Instruments literature number SLUA271 (www.ti.com/lit/slua271).
5. Vias are optional depending on application, refer to device data sheet. If any vias are implemented, refer to their locations shown on this view. It is recommended that vias under paste be filled, plugged or tented.

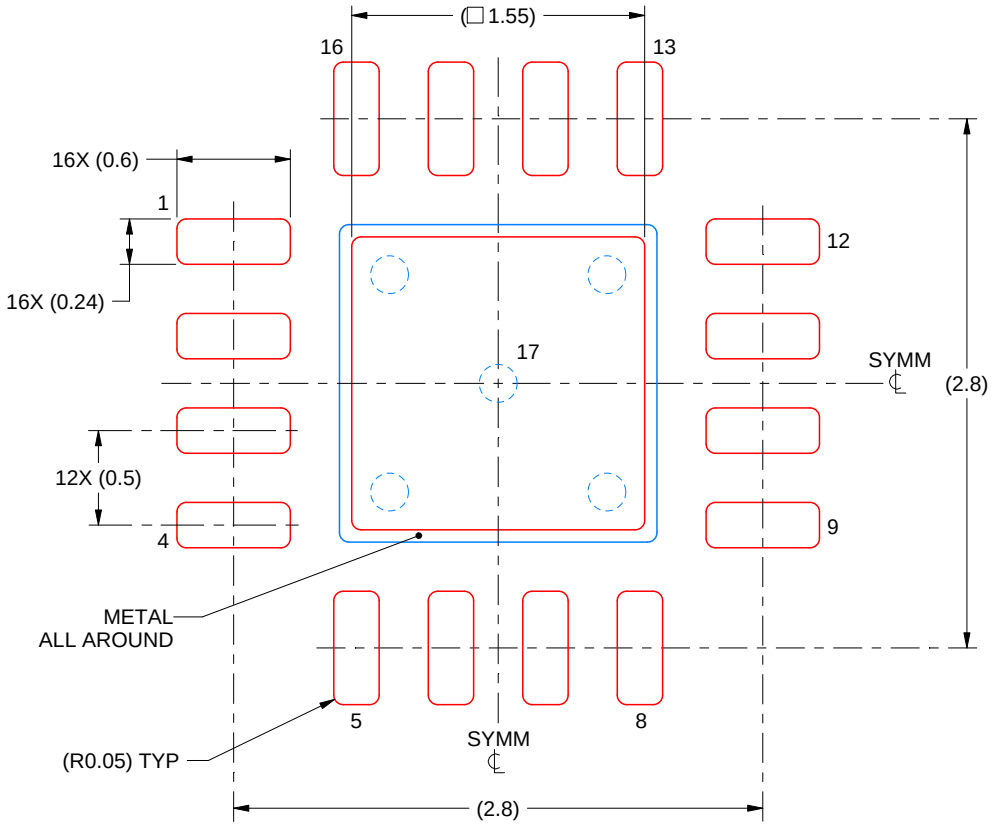

SOLDER PASTE EXAMPLE
BASED ON 0.125 mm THICK STENCIL

EXPOSED PAD 17:
85% PRINTED SOLDER COVERAGE BY AREA UNDER PACKAGE
SCALE:25X

4219117/B 04/2022

NOTES: (continued)

6. Laser cutting apertures with trapezoidal walls and rounded corners may offer better paste release. IPC-7525 may have alternate design recommendations.

IMPORTANT NOTICE AND DISCLAIMER

TI PROVIDES TECHNICAL AND RELIABILITY DATA (INCLUDING DATA SHEETS), DESIGN RESOURCES (INCLUDING REFERENCE DESIGNS), APPLICATION OR OTHER DESIGN ADVICE, WEB TOOLS, SAFETY INFORMATION, AND OTHER RESOURCES “AS IS” AND WITH ALL FAULTS, AND DISCLAIMS ALL WARRANTIES, EXPRESS AND IMPLIED, INCLUDING WITHOUT LIMITATION ANY IMPLIED WARRANTIES OF MERCHANTABILITY, FITNESS FOR A PARTICULAR PURPOSE OR NON-INFRINGEMENT OF THIRD PARTY INTELLECTUAL PROPERTY RIGHTS.

These resources are intended for skilled developers designing with TI products. You are solely responsible for (1) selecting the appropriate TI products for your application, (2) designing, validating and testing your application, and (3) ensuring your application meets applicable standards, and any other safety, security, regulatory or other requirements.

These resources are subject to change without notice. TI grants you permission to use these resources only for development of an application that uses the TI products described in the resource. Other reproduction and display of these resources is prohibited. No license is granted to any other TI intellectual property right or to any third party intellectual property right. TI disclaims responsibility for, and you will fully indemnify TI and its representatives against, any claims, damages, costs, losses, and liabilities arising out of your use of these resources.

TI’s products are provided subject to TI’s Terms of Sale or other applicable terms available either on ti.com or provided in conjunction with such TI products. TI’s provision of these resources does not expand or otherwise alter TI’s applicable warranties or warranty disclaimers for TI products.

TI objects to and rejects any additional or different terms you may have proposed.

Mailing Address: Texas Instruments, Post Office Box 655303, Dallas, Texas 75265
Copyright © 2025, Texas Instruments Incorporated