SPRS067F − MAY 1998 − REVISED MARCH 2004

- **Highest Performance Floating-Point Digital Signal Processor (DSP) TMS320C6701**
  - **8.3-, 6.7-, 6-ns Instruction Cycle Time**
  - **120-, 150-, 167-MHz Clock Rate**
  - **Eight 32-Bit Instructions/Cycle**
  - **1 GFLOPS**
  - **TMS320C6201 Fixed-Point DSP Pin-Compatible**
- **VelociTI™ Advanced Very Long Instruction Word (VLIW) C67x CPU Core**
  - **Eight Highly Independent Functional Units:**
    - **Four ALUs (Floating- and Fixed-Point)**
    - **Two ALUs (Fixed-Point)**
    - **Two Multipliers (Floating- and Fixed-Point)**
  - **Load-Store Architecture With 32 32-Bit General-Purpose Registers**
  - **Instruction Packing Reduces Code Size**
  - **All Instructions Conditional**
- **Instruction Set Features**
  - **Hardware Support for IEEE Single-Precision Instructions**
  - **Hardware Support for IEEE Double-Precision Instructions**
  - **Byte-Addressable (8-, 16-, 32-Bit Data)**
  - **8-Bit Overflow Protection**
  - **Saturation**
  - **Bit-Field Extract, Set, Clear**
  - **Bit-Counting**
  - **Normalization**
- **1M-Bit On-Chip SRAM**
  - **512K-Bit Internal Program/Cache (16K 32-Bit Instructions)**
  - **512K-Bit Dual-Access Internal Data (64K Bytes)**
- **32-Bit External Memory Interface (EMIF)**
  - **Glueless Interface to Synchronous Memories: SDRAM and SBSRAM**
  - **Glueless Interface to Asynchronous Memories: SRAM and EPROM**
  - **52M-Byte Addressable External Memory Space**
- **Four-Channel Bootloading Direct-Memory-Access (DMA) Controller With an Auxiliary Channel**

GJC (352-PIN BGA) PACKAGE
(BOTTOM VIEW)

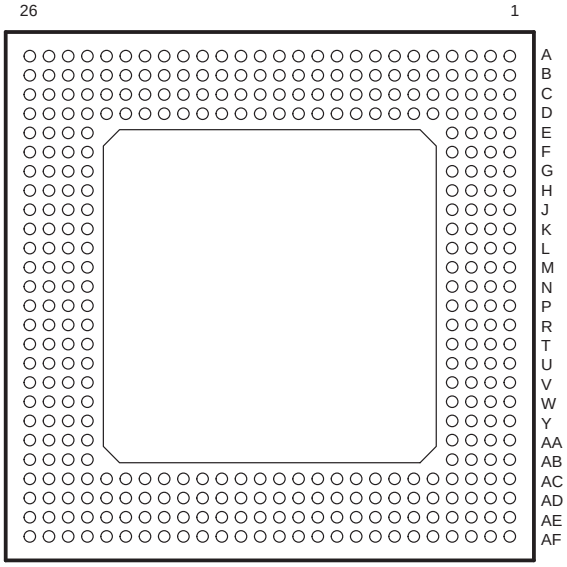

- **16-Bit Host-Port Interface (HPI)**
  - **Access to Entire Memory Map**
- **Two Multichannel Buffered Serial Ports (McBSPs)**
  - **Direct Interface to T1/E1, MVIP, SCSA Framers**
  - **ST-Bus-Switching Compatible**
  - **Up to 256 Channels Each**
  - **AC97-Compatible**
  - **Serial-Peripheral-Interface (SPI) Compatible (Motorola™)**
- **Two 32-Bit General-Purpose Timers**
- **Flexible Phase-Locked-Loop (PLL) Clock Generator**
- **IEEE-1149.1 (JTAG†) Boundary-Scan-Compatible**
- **352-Pin Ball Grid Array (BGA) Package (GJC Suffix)**
- **0.18-μm/5-Level Metal Process**
  - **CMOS Technology**
- **3.3-V I/Os, 1.8-V Internal (120-, 150-MHz)**
- **3.3-V I/Os, 1.9-V Internal (167-MHz Only)**

Please be aware that an important notice concerning availability, standard warranty, and use in critical applications of Texas Instruments semiconductor products and disclaimers thereto appears at the end of this data sheet.

VelociTI is a trademark of Texas Instruments.
Motorola is a trademark of Motorola, Inc.
† IEEE Standard 1149.1-1990 Standard-Test-Access Port and Boundary Scan Architecture.

PRODUCTION DATA information is current as of publication date. Products conform to specifications per the terms of Texas Instruments standard warranty. Production processing does not necessarily include testing of all parameters.

Copyright © 2004, Texas Instruments Incorporated

TEXAS INSTRUMENTS
POST OFFICE BOX 1443 • HOUSTON, TEXAS 77251−1443

Table of Contents

GJC BGA package (bottom view) 1
description 2
device characteristics 3
functional block and CPU diagram 4
CPU description 5
signal groups description 7
signal descriptions 9
development support 20
documentation support 23
clock PLL 24
power-down logic mode 26
absolute maximum ratings over operating case temperature range 29
recommended operating conditions 29
electrical characteristics over recommended ranges of supply voltage and operating case temperature 30
parameter measurement information 31
signal-transition levels 31
input and output clocks 32
asynchronous memory timing 35
synchronous-burst memory timing 37
synchronous DRAM timing 41
$\overline{\text{HOLD}}$/$\overline{\text{HOLDA}}$ timing 45
reset timing 46
external interrupt timing 48
host-port interface timing 49
multichannel buffered serial port timing 52
DMAC, timer, power-down timing 63
JTAG test-port timing 65
mechanical data 66
revision history 67

description

The TMS320C67x DSPs are the floating-point DSP family in the TMS320C6000™ DSP platform. The TMS320C6701 (C6701) device is based on the high-performance, advanced VelociTI very-long-instruction-word (VLIW) architecture developed by Texas Instruments (TI), making this DSP an excellent choice for multichannel and multifunction applications. With performance of up to 1 giga floating-point operations per second (GFLOPS) at a clock rate of 167 MHz, the C6701 offers cost-effective solutions to high-performance DSP programming challenges. The C6701 DSP possesses the operational flexibility of high-speed controllers and the numerical capability of array processors. This processor has 32 general-purpose registers of 32-bit word length and eight highly independent functional units. The eight functional units provide four floating-/fixed-point ALUs, two fixed-point ALUs, and two floating-/fixed-point multipliers. The C6701 can produce two multiply-accumulates (MACs) per cycle for a total of 334 million MACs per second (MMACS). The C6701 DSP also has application-specific hardware logic, on-chip memory, and additional on-chip peripherals.

The C6701 includes a large bank of on-chip memory and has a powerful and diverse set of peripherals. Program memory consists of a 64K-byte block that is user-configurable as cache or memory-mapped program space. Data memory consists of two 32K-byte blocks of RAM. The peripheral set includes two multichannel buffered serial ports (McBSPs), two general-purpose timers, a host-port interface (HPI), and a glueless external memory interface (EMIF) capable of interfacing to SDRAM or SBSRAM and asynchronous peripherals.

The C6701 has a complete set of development tools which includes: a new C compiler, an assembly optimizer to simplify programming and scheduling, and a Windows™ debugger interface for visibility into source code execution.

TMS320C6000 is a trademark of Texas Instruments.
Windows is a registered trademark of Microsoft Corporation.

device characteristics

Table 1 provides an overview of the C6701 DSP. The table shows significant features of each device, including the capacity of on-chip RAM, the peripherals, the execution time, and the package type with pin count, etc.

Table 1. Characteristics of the C6701 Processors

HARDWARE FEATURES		C6701
Peripherals	EMIF	1
	DMA	4-Channel
	Host-Port Interface (HPI)	1
	McBSPs	2
	32-Bit Timers	2
Internal Program Memory	Size (Bytes)	64K
	Organization	64K Bytes Cache/Mapped Program
Internal Data Memory	Size (Bytes)	64K
	Organization	2 Blocks: Eight 16-Bit Banks per Block 50/50 Split
Frequency	MHz	120, 150, 167
Cycle Time	ns	6 ns (6701-167); 6.7 ns (6701-150); 8.3 ns (6701-120)
Voltage	Core (V)	1.8 (6701-120, -150)
		1.9 (6701-167 only)
	I/O (V)	3.3
PLL Options	CLKIN frequency multiplier	Bypass (x1), x4
BGA Package	35 × 35 mm	352-pin GJC
Process Technology	µm	0.18 µm
Product Status	Product Preview (PP) Advance Information (AI) Production Data (PD)	PD

functional block and CPU diagram

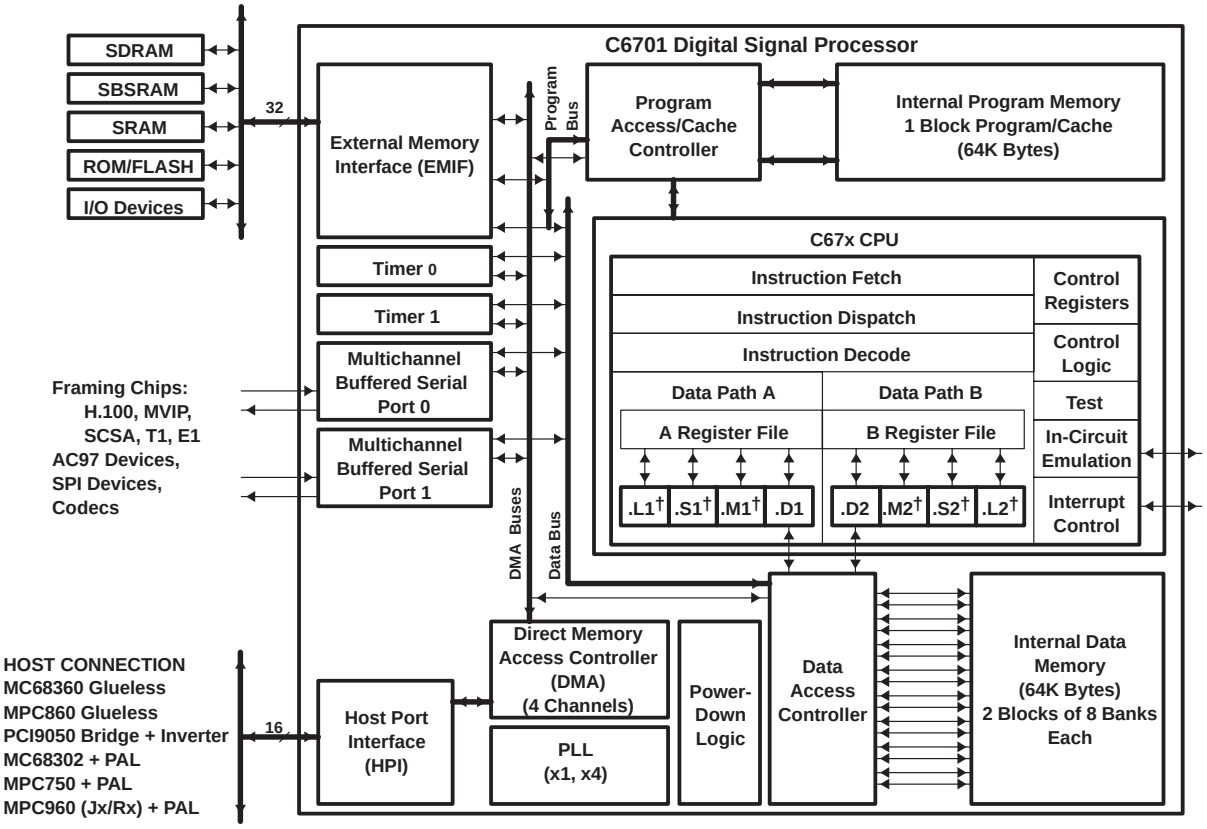

† These functional units execute floating-point instructions.

CPU description

The CPU fetches VelociTI advanced very-long instruction words (VLIW) (256 bits wide) to supply up to eight 32-bit instructions to the eight functional units during every clock cycle. The VelociTI VLIW architecture features controls by which all eight units do not have to be supplied with instructions if they are not ready to execute. The first bit of every 32-bit instruction determines if the next instruction belongs to the same execute packet as the previous instruction, or whether it should be executed in the following clock as a part of the next execute packet. Fetch packets are always 256 bits wide; however, the execute packets can vary in size. The variable-length execute packets are a key memory-saving feature, distinguishing the C67x CPU from other VLIW architectures.

The CPU features two sets of functional units. Each set contains four units and a register file. One set contains functional units .L1, .S1, .M1, and .D1; the other set contains units .D2, .M2, .S2, and .L2. The two register files contain 16 32-bit registers each for the total of 32 general-purpose registers. The two sets of functional units, along with two register files, compose sides A and B of the CPU (see the Functional and CPU Block diagram and Figure 1). The four functional units on each side of the CPU can freely share the 16 registers belonging to that side. Additionally, each side features a single data bus connected to all registers on the other side, by which the two sets of functional units can access data from the register files on opposite sides. While register access by functional units on the same side of the CPU as the register file can service all the units in a single clock cycle, register access using the register file across the CPU supports one read and one write per cycle.

The C67x CPU executes all TMS320C62x™ DSP fixed-point instructions. In addition to the C62x DSP fixed-point instructions, the six out of eight functional units (.L1, .M1, .D1, .D2, .M2, and .L2) also execute floating-point instructions. The remaining two functional units (.S1 and .S2) also execute the new LDDW instruction which loads 64 bits per CPU side for a total of 128 bits per cycle.

Another key feature of the C67x CPU is the load/store architecture, where all instructions operate on registers (as opposed to data in memory). Two sets of data-addressing units (.D1 and .D2) are responsible for all data transfers between the register files and the memory. The data address driven by the .D units allows data addresses generated from one register file to be used to load or store data to or from the other register file. The C67x CPU supports a variety of indirect-addressing modes using either linear- or circular-addressing modes with 5- or 15-bit offsets. All instructions are conditional, and most can access any one of the 32 registers. Some registers, however, are singled out to support specific addressing or to hold the condition for conditional instructions (if the condition is not automatically “true”). The two .M functional units are dedicated for multiplies. The two .S and .L functional units perform a general set of arithmetic, logical, and branch functions with results available every clock cycle.

The processing flow begins when a 256-bit-wide instruction fetch packet is fetched from a program memory. The 32-bit instructions destined for the individual functional units are “linked” together by “1” bits in the least significant bit (LSB) position of the instructions. The instructions that are “chained” together for simultaneous execution (up to eight in total) compose an execute packet. A “0” in the LSB of an instruction breaks the chain, effectively placing the instructions that follow it in the next execute packet. If an execute packet crosses the fetch-packet boundary (256 bits wide), the assembler places it in the next fetch packet, while the remainder of the current fetch packet is padded with NOP instructions. The number of execute packets within a fetch packet can vary from one to eight. Execute packets are dispatched to their respective functional units at the rate of one per clock cycle and the next 256-bit fetch packet is not fetched until all the execute packets from the current fetch packet have been dispatched. After decoding, the instructions simultaneously drive all active functional units for a maximum execution rate of eight instructions every clock cycle. While most results are stored in 32-bit registers, they can be subsequently moved to memory as bytes or half-words as well. All load and store instructions are byte-, half-word, or word-addressable.

TMS320C62x is a trademark of Texas Instruments.

CPU description (continued)

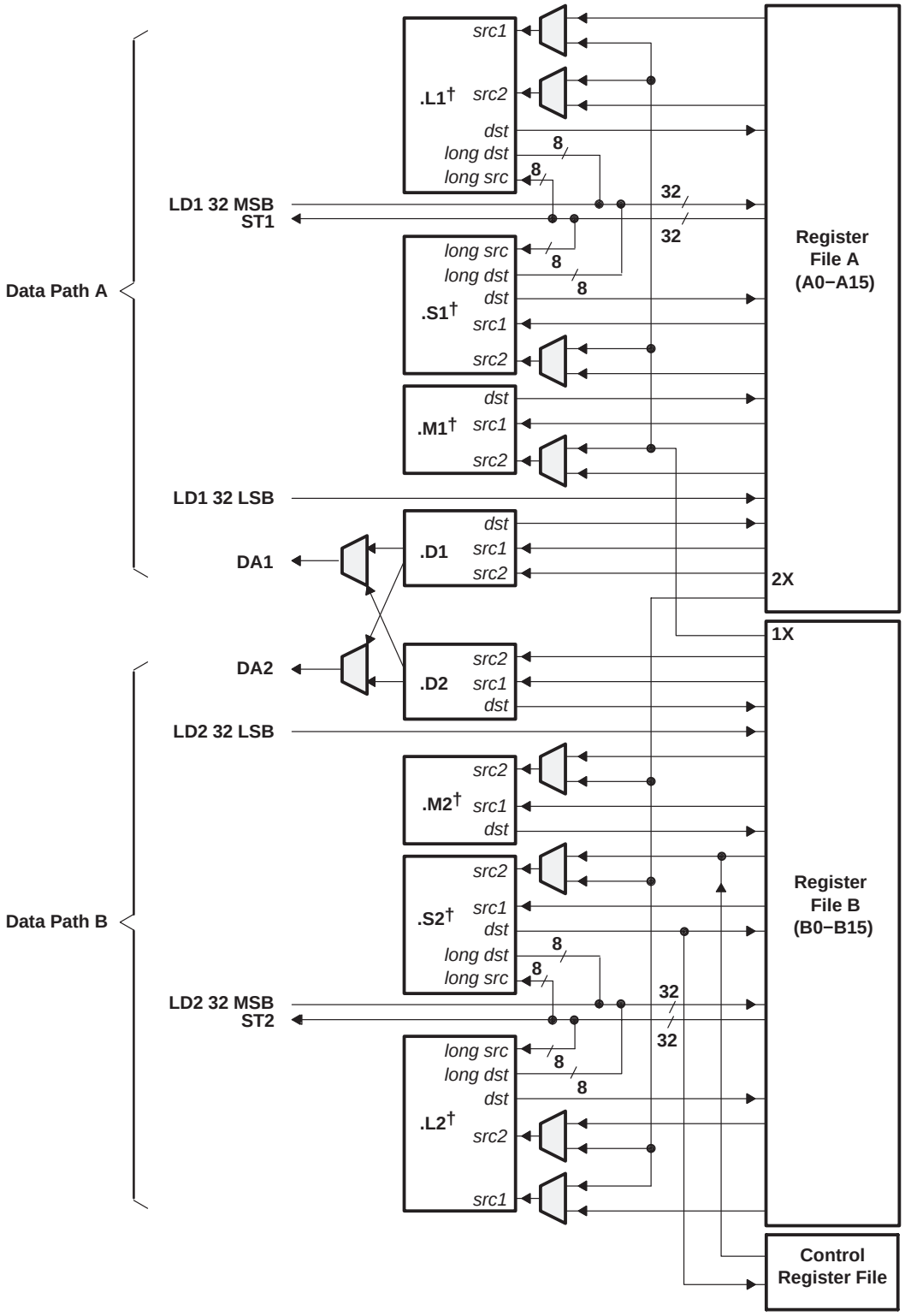

† These functional units execute floating-point instructions.

Figure 1. TMS320C67x CPU Data Paths

signal groups description

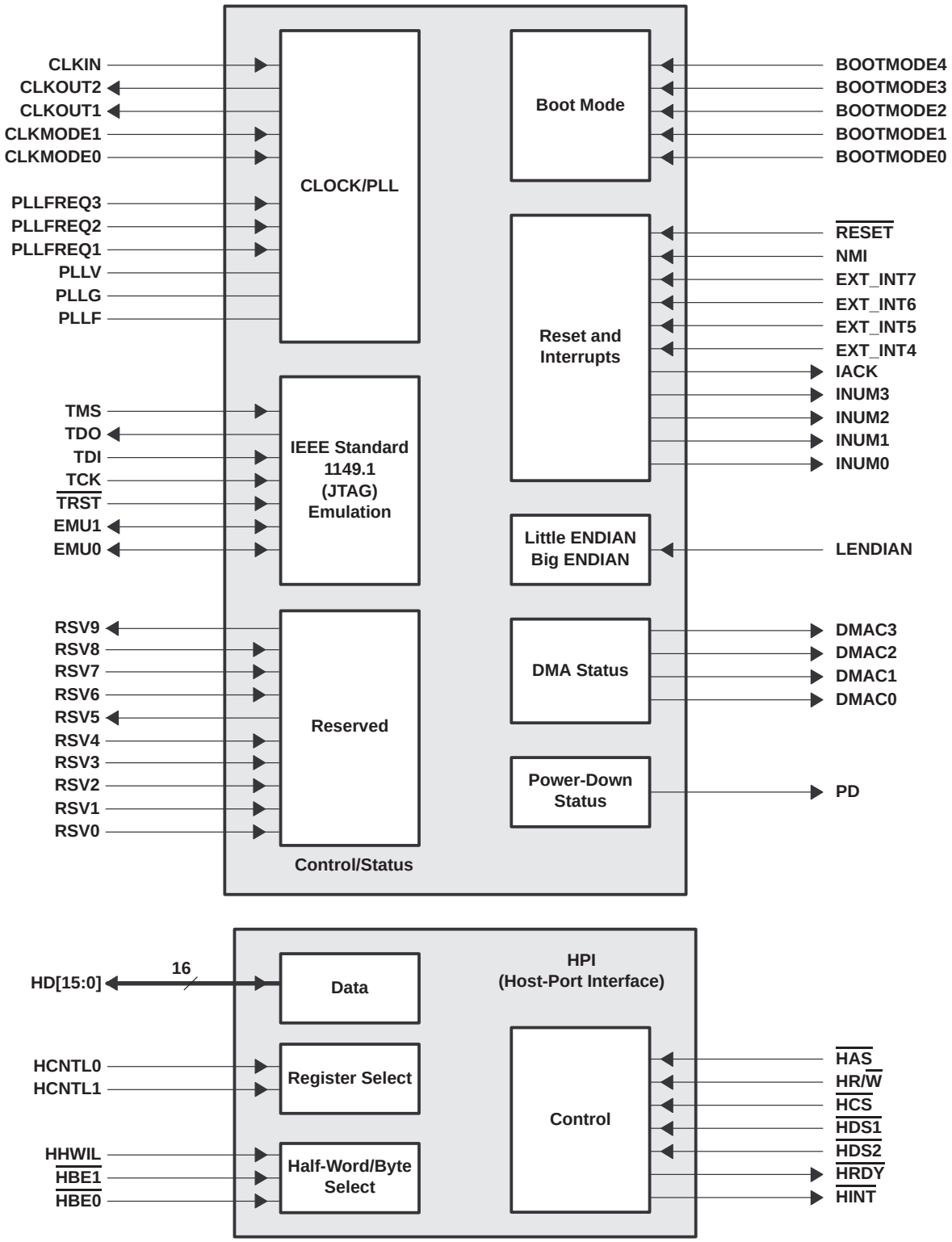

Figure 2. CPU and Peripheral Signals

signal groups description (continued)

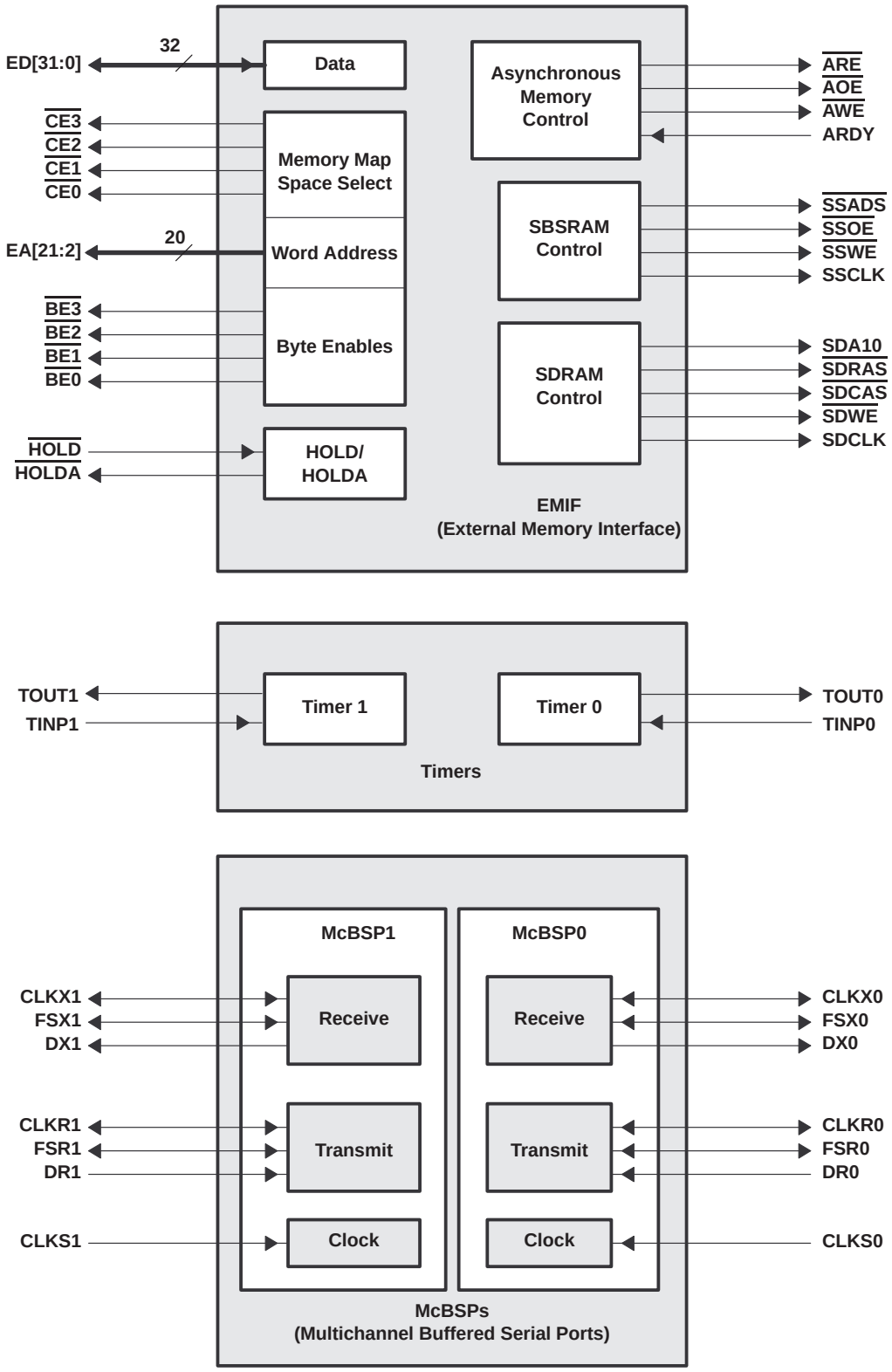

Figure 3. Peripheral Signals

Signal Descriptions

SIGNAL NAME	SIGNAL NO.	TYPE†	DESCRIPTION
CLOCK/PLL			
CLKIN	C10	I	Clock Input
CLKOUT1	AF22	O	Clock output at full device speed
CLKOUT2	AF20	O	Clock output at half of device speed
CLKMODE1	C6	I	Clock mode select ❑ Selects whether the output clock frequency = input clock frequency x4 or x1
CLKMODE0	C5		
PLLFREQ3	A9	I	PLL frequency range (3, 2, and 1) ❑ The target range for CLKOUT1 frequency is determined by the 3-bit value of the PLLFREQ pins.
PLLFREQ2	D11		
PLLFREQ1	B10		
PLLV‡	D12	A§	PLL analog V_{CC} connection for the low-pass filter
PLLG‡	C12	A§	PLL analog GND connection for the low-pass filter
PLLF	A11	A§	PLL low-pass filter connection to external components and a bypass capacitor
JTAG EMULATION			
TMS	L3	I	JTAG test-port mode select (features an internal pullup)
TDO	W2	O/Z	JTAG test-port data out
TDI	R4	I	JTAG test-port data in (features an internal pullup)
TCK	R3	I	JTAG test-port clock
$\overline{\text{TRST}}$	T1	I	JTAG test-port reset (features an internal pulldown)
EMU1	Y1	I/O/Z	Emulation pin 1, pullup with a dedicated 20-kΩ resistor¶
EMU0	W3	I/O/Z	Emulation pin 0, pullup with a dedicated 20-kΩ resistor¶
CONTROL			
$\overline{\text{RESET}}$	K2	I	Device reset
NMI	L2	I	Nonmaskable interrupt ❑ Edge-driven (rising edge)
EXT_INT7	U3	I	External interrupts ❑ Edge-driven (rising edge)
EXT_INT6	V2		
EXT_INT5	W1		
EXT_INT4	U4		
IACK	Y2	O	Interrupt acknowledge for all active interrupts serviced by the CPU
INUM3	AA1	O	Active interrupt identification number ❑ Valid during IACK for all active interrupts (not just external) ❑ Encoding order follows the interrupt-service fetch-packet ordering
INUM2	W4		
INUM1	AA2		
INUM0	AB1		
LENDIAN	H3	I	If high, LENDIAN selects little-endian byte/half-word addressing order within a word If low, LENDIAN selects big-endian addressing
PD	D3	O	Power-down mode 3 (active if high)

† I = Input, O = Output, Z = High Impedance, S = Supply Voltage, GND = Ground
‡ PLLV and PLLG are not part of external voltage supply or ground. See the CLOCK/PLL documentation for information on how to connect these pins.
§ A = Analog Signal (PLL Filter)
¶ For emulation and normal operation, pull up EMU1 and EMU0 with a dedicated 20-kΩ resistor. For boundary scan, pull down EMU1 and EMU0 with a dedicated 20-kΩ resistor.

Signal Descriptions (Continued)

SIGNAL NAME	SIGNAL NO.	TYPE†	DESCRIPTION
HOST-PORT INTERFACE (HPI)			
$\overline{\text{HINT}}$	H26	O	Host interrupt (from DSP to host)
HCNTL1	F23	I	Host control − selects between control, address, or data registers
HCNTL0	D25	I	Host control − selects between control, address, or data registers
HHWIL	C26	I	Host half-word select − first or second half-word (not necessarily high or low order)
HBE1	E23	I	Host byte select within word or half-word
HBE0	D24	I	Host byte select within word or half-word
HR/$\overline{\text{W}}$	C23	I	Host read or write select
HD15	B13	I/O/Z	Host-port data (used for transfer of data, address, and control)
HD14	B14		
HD13	C14		
HD12	B15		
HD11	D15		
HD10	B16		
HD9	A17		
HD8	B17		
HD7	D16		
HD6	B18		
HD5	A19		
HD4	C18		
HD3	B19		
HD2	C19		
HD1	B20		
HD0	B21		
$\overline{\text{HAS}}$	C22	I	Host address strobe
$\overline{\text{HCS}}$	B23	I	Host chip select
$\overline{\text{HDS1}}$	D22	I	Host data strobe 1
$\overline{\text{HDS2}}$	A24	I	Host data strobe 2
$\overline{\text{HRDY}}$	J24	O	Host ready (from DSP to host)
BOOT MODE			
BOOTMODE4	D8	I	Boot mode
BOOTMODE3	B4		
BOOTMODE2	A3		
BOOTMODE1	D5		
BOOTMODE0	C4		

† I = Input, O = Output, Z = High Impedance, S = Supply Voltage, GND = Ground

Signal Descriptions (Continued)

SIGNAL NAME	SIGNAL NO.	TYPE†	DESCRIPTION
EMIF − CONTROL SIGNALS COMMON TO ALL TYPES OF MEMORY			
$\overline{CE3}$	AE22	O/Z	Memory space enables ❑ Enabled by bits 24 and 25 of the word address ❑ Only one asserted during any external data access
$\overline{CE2}$	AD26	O/Z	
$\overline{CE1}$	AB24	O/Z	
$\overline{CE0}$	AC26	O/Z	
$\overline{BE3}$	AB25	O/Z	Byte-enable control ❑ Decoded from the two lowest bits of the internal address ❑ Byte-write enables for most types of memory ❑ Can be directly connected to SDRAM read and write mask signal (SDQM)
$\overline{BE2}$	AA24	O/Z	
$\overline{BE1}$	Y23	O/Z	
$\overline{BE0}$	AA26	O/Z	
EMIF − ADDRESS			
EA21	J26	O/Z	External address (word address)
EA20	K25		
EA19	L24		
EA18	K26		
EA17	M26		
EA16	M25		
EA15	P25		
EA14	P24		
EA13	R25		
EA12	T26		
EA11	R23		
EA10	U26		
EA9	U25		
EA8	T23		
EA7	V26		
EA6	V25		
EA5	W26		
EA4	V24		
EA3	W25		
EA2	Y26		

† I = Input, O = Output, Z = High Impedance, S = Supply Voltage, GND = Ground

Signal Descriptions (Continued)

SIGNAL NAME	SIGNAL NO.	TYPE†	DESCRIPTION
EMIF − DATA			
ED31	AB2	I/O/Z	External data
ED30	AC1		
ED29	AA4		
ED28	AD1		
ED27	AC3		
ED26	AD4		
ED25	AF3		
ED24	AE4		
ED23	AD5		
ED22	AF4		
ED21	AE5		
ED20	AD6		
ED19	AE6		
ED18	AD7		
ED17	AC8		
ED16	AF7		
ED15	AD9		
ED14	AD10		
ED13	AF9		
ED12	AC11		
ED11	AE10		
ED10	AE11		
ED9	AF11		
ED8	AE14		
ED7	AF15		
ED6	AE15		
ED5	AF16		
ED4	AC15		
ED3	AE17		
ED2	AF18		
ED1	AF19		
ED0	AC17		
EMIF − ASYNCHRONOUS MEMORY CONTROL			
$\overline{\text{ARE}}$	Y24	O/Z	Asynchronous memory read enable
$\overline{\text{AOE}}$	AC24	O/Z	Asynchronous memory output enable
$\overline{\text{AWE}}$	AD23	O/Z	Asynchronous memory write enable
ARDY	W23	I	Asynchronous memory ready input

† I = Input, O = Output, Z = High Impedance, S = Supply Voltage, GND = Ground

Signal Descriptions (Continued)

SIGNAL NAME	SIGNAL NO.	TYPE†	DESCRIPTION
EMIF − SYNCHRONOUS BURST SRAM CONTROL			
$\overline{\text{SSADS}}$	AC20	O/Z	SBSRAM address strobe
$\overline{\text{SSOE}}$	AF21	O/Z	SBSRAM output enable
$\overline{\text{SSWE}}$	AD19	O/Z	SBSRAM write enable
SSCLK	AD17	O	SBSRAM clock
EMIF − SYNCHRONOUS DRAM CONTROL			
SDA10	AD21	O/Z	SDRAM address 10 (separate for deactivate command)
$\overline{\text{SDRAS}}$	AF24	O/Z	SDRAM row-address strobe
$\overline{\text{SDCAS}}$	AD22	O/Z	SDRAM column-address strobe
$\overline{\text{SDWE}}$	AF23	O/Z	SDRAM write enable
SDCLK	AE20	O	SDRAM clock
EMIF − BUS ARBITRATION			
$\overline{\text{HOLD}}$	AA25	I	Hold request from the host
$\overline{\text{HOLDA}}$	A7	O	Hold-request-acknowledge to the host
TIMERS			
TOUT1	H24	O	Timer 1 or general-purpose output
TINP1	K24	I	Timer 1 or general-purpose input
TOUT0	M4	O	Timer 0 or general-purpose output
TINP0	K4	I	Timer 0 or general-purpose input
DMA ACTION COMPLETE			
DMAC3	D2	O	DMA action complete
DMAC2	F4		
DMAC1	D1		
DMAC0	E2		
MULTICHANNEL BUFFERED SERIAL PORT 1 (McBSP1)			
CLKS1	E25	I	External clock source (as opposed to internal)
CLKR1	H23	I/O/Z	Receive clock
CLKX1	F26	I/O/Z	Transmit clock
DR1	D26	I	Receive data
DX1	G23	O/Z	Transmit data
FSR1	E26	I/O/Z	Receive frame sync
FSX1	F25	I/O/Z	Transmit frame sync

† I = Input, O = Output, Z = High Impedance, S = Supply Voltage, GND = Ground

Signal Descriptions (Continued)

SIGNAL NAME	SIGNAL NO.	TYPE†	DESCRIPTION
MULTICHANNEL BUFFERED SERIAL PORT 0 (McBSP0)			
CLKS0	L4	I	External clock source (as opposed to internal)
CLKR0	M2	I/O/Z	Receive clock
CLKX0	L1	I/O/Z	Transmit clock
DR0	J1	I	Receive data
DX0	R1	O/Z	Transmit data
FSR0	P4	I/O/Z	Receive frame sync
FSX0	P3	I/O/Z	Transmit frame sync
RESERVED FOR TEST			
RSV0	T2	I	Reserved for testing, pullup with a dedicated 20-kΩ resistor
RSV1	G2	I	Reserved for testing, pullup with a dedicated 20-kΩ resistor
RSV2	C11	I	Reserved for testing, pullup with a dedicated 20-kΩ resistor
RSV3	B9	I	Reserved for testing, pullup with a dedicated 20-kΩ resistor
RSV4	A6	I	Reserved for testing, ***pulldown*** with a dedicated 20-kΩ resistor
RSV5	C8	O	Reserved (leave unconnected, ***do not*** connect to power or ground)
RSV6	C21	I	Reserved for testing, pullup with a dedicated 20-kΩ resistor
RSV7	B22	I	Reserved for testing, pullup with a dedicated 20-kΩ resistor
RSV8	A23	I	Reserved for testing, pullup with a dedicated 20-kΩ resistor
RSV9	E4	O	Reserved (leave unconnected, ***do not*** connect to power or ground)
SUPPLY VOLTAGE PINS			
DV_{DD}	A10	S	3.3-V supply voltage
	A15		
	A18		
	A21		
	A22		
	B7		
	C1		
	D17		
	F3		
	G24		
	G25		
	H25		
	J25		
	L25		
	M3		
	N3		
	N23		
	R26		
	T24		
	U24		
	W24		

† I = Input, O = Output, Z = High Impedance, S = Supply Voltage, GND = Ground

Signal Descriptions (Continued)

SIGNAL NAME	SIGNAL NO.	TYPE†	DESCRIPTION
SUPPLY VOLTAGE PINS (CONTINUED)			
DV_{DD}	Y4	S	3.3-V supply voltage
	AB3		
	AB4		
	AB26		
	AC6		
	AC10		
	AC19		
	AC21		
	AC22		
	AC25		
	AD11		
	AD13		
	AD15		
	AD18		
	AE18		
	AE21		
	AF5		
	AF6		
	AF17		
CV_{DD}	A5	S	1.8-V supply voltage (for 6701-120, -150) 1.9-V supply voltage (for 6701-167 only)
	A12		
	A16		
	A20		
	B2		
	B6		
	B11		
	B12		
	B25		
	C3		
	C15		
	C20		
	C24		
	D4		
	D6		
	D7		
	D9		
	D14		
	D18		
	D20		

† I = Input, O = Output, Z = High Impedance, S = Supply Voltage, GND = Ground

Signal Descriptions (Continued)

SIGNAL NAME	SIGNAL NO.	TYPE†	DESCRIPTION
SUPPLY VOLTAGE PINS (CONTINUED)			
CV_{DD}	D23	S	1.8-V supply voltage (for 6701-120, -150) 1.9-V supply voltage (for 6701-167 only)
	E1		
	F1		
	H4		
	J4		
	J23		
	K1		
	K23		
	M1		
	M24		
	N4		
	N25		
	P2		
	P23		
	T3		
	T4		
	U1		
	V4		
	V23		
	AC4		
	AC9		
	AC12		
	AC13		
	AC18		
	AC23		
	AD3		
	AD8		
	AD14		
	AD24		
	AE2		
	AE8		
	AE12		
	AE25		
	AF12		

† I = Input, O = Output, Z = High Impedance, S = Supply Voltage, GND = Ground

Signal Descriptions (Continued)

SIGNAL NAME	SIGNAL NO.	TYPE†	DESCRIPTION
GROUND PINS			
V_{SS}	A1	GND	Ground pins
	A2		
	A4		
	A13		
	A14		
	A25		
	A26		
	B1		
	B3		
	B5		
	B24		
	B26		
	C2		
	C7		
	C13		
	C16		
	C17		
	C25		
	D13		
	D19		
	E3		
	E24		
	F2		
	F24		
	G3		
	G4		
	G26		
	J3		
	L23		
	L26		
	M23		
	N1		
	N2		
	N24		
	N26		
	P1		
	P26		
	R24		
	T25		

† I = Input, O = Output, Z = High Impedance, S = Supply Voltage, GND = Ground

Signal Descriptions (Continued)

SIGNAL NAME	SIGNAL NO.	TYPE†	DESCRIPTION
GROUND PINS (CONTINUED)			
V_{SS}	U2	GND	Ground pins
	U23		
	V1		
	V3		
	Y3		
	Y25		
	AA3		
	AA23		
	AB23		
	AC2		
	AC5		
	AC7		
	AC14		
	AC16		
	AD2		
	AD12		
	AD16		
	AD20		
	AD25		
	AE1		
	AE3		
	AE7		
	AE9		
	AE13		
	AE16		
	AE19		
	AE23		
	AE24		
	AE26		
	AF1		
	AF2		
	AF8		
	AF10		
	AF13		
	AF14		
	AF25		
	AF26		

† I = Input, O = Output, Z = High Impedance, S = Supply Voltage, GND = Ground

Signal Descriptions (Continued)

SIGNAL NAME	SIGNAL NO.	TYPE†	DESCRIPTION
REMAINING UNCONNECTED PINS			
NC	A8		Unconnected pins
	B8		
	C9		
	D10		
	D21		
	G1		
	H1		
	H2		
	J2		
	K3		
	R2		

† I = Input, O = Output, Z = High Impedance, S = Supply Voltage, GND = Ground

development support

TI offers an extensive line of development tools for the TMS320C6000 DSP platform, including tools to evaluate the performance of the processors, generate code, develop algorithm implementations, and fully integrate and debug software and hardware modules.

The following products support development of C6000™ DSP-based applications:

Software Development Tools:
Code Composer Studio™ Integrated Development Environment (IDE): including Editor
C/C++/Assembly Code Generation, and Debug plus additional development tools
Scalable, Real-Time Foundation Software (DSP BIOS), which provides the basic run-time target software needed to support any DSP application.

Hardware Development Tools:
Extended Development System (XDS™) Emulator (supports C6000™ DSP multiprocessor system debug)
EVM (Evaluation Module)

The *TMS320 DSP Development Support Reference Guide* (SPRU011) contains information about development-support products for all TMS320™ DSP family member devices, including documentation. See this document for further information on TMS320™ DSP documentation or any TMS320™ DSP support products from Texas Instruments. An additional document, the *TMS320 Third-Party Support Reference Guide* (SPRU052), contains information about TMS320™ DSP-related products from other companies in the industry. To receive TMS320™ DSP literature, contact the Literature Response Center at 800/477-8924.

For a complete listing of development-support tools for the TMS320C6000 DSP platform, visit the Texas Instruments web site on the Worldwide Web at http://www.ti.com uniform resource locator (URL) and under “Development Tools”, select “Digital Signal Processors”. For information on pricing and availability, contact the nearest TI field sales office or authorized distributor.

Code Composer Studio, XDS, and TMS320 are trademarks of Texas Instruments.

device and development-support tool nomenclature

To designate the stages in the product-development cycle, TI assigns prefixes to the part numbers of all TMS320 DSP devices and support tools. Each TMS320 DSP family member has one of three prefixes: TMX, TMP, or TMS. Texas Instruments recommends two of three possible prefix designators for support tools: TMDX and TMDS. These prefixes represent evolutionary stages of product development from engineering prototypes (TMX/TMDX) through fully qualified production devices/tools (TMS/TMDS).

Device development evolutionary flow:

TMX Experimental device that is not necessarily representative of the final device's electrical specifications

TMP Final silicon die that conforms to the device's electrical specifications but has not completed quality and reliability verification

TMS Fully qualified production device

Support tool development evolutionary flow:

TMDX Development-support product that has not yet completed Texas Instruments internal qualification testing.

TMDS Fully qualified development-support product

TMX and TMP devices and TMDX development-support tools are shipped against the following disclaimer:

"Developmental product is intended for internal evaluation purposes."

TMS devices and TMDS development-support tools have been characterized fully, and the quality and reliability of the device have been demonstrated fully. TI's standard warranty applies.

Predictions show that prototype devices (TMX or TMP) have a greater failure rate than the standard production devices. Texas Instruments recommends that these devices not be used in any production system because their expected end-use failure rate still is undefined. Only qualified production devices are to be used.

TI device nomenclature also includes a suffix with the device family name. This suffix indicates the package type (for example, GJC), the temperature range (for example, blank is the default commercial temperature range), and the device speed range in megahertz (for example, -167 is 167 MHz). Table 2 identifies the available TMS320C6701 devices by their associated orderable part numbers (P/Ns) and gives device-specific ordering information (for example, device speeds, core and I/O supply voltage values, and device operating temperature ranges). Figure 4 provides a legend for reading the complete device name for any TMS320™ DSP family member.

Table 2. TMS320C6701 Device P/Ns and Ordering Information

DEVICE ORDERABLE P/N	DEVICE SPEED	CV_{DD} (CORE VOLTAGE)	DV_{DD} (I/O VOLTAGE)	OPERATING CASE TEMPERATURE RANGE
TMSC6701GJC16719V	167 MHz/1 GFLOPS	1.9 V	3.3 V	0°C to 90°C
TMS320C6701GJC150	150 MHz/900 MFLOPS	1.8 V	3.3 V	0°C to 90°C
TMS320C6701GJCA120	120 MHz/720 MFLOPS	1.8 V	3.3 V	−40°C to 105°C

device and development-support tool nomenclature (continued)

TMS 320 C 6701 GJC (A) 167

PREFIX

TMX = Experimental device
TMP = Prototype device
TMS = Qualified device
SMJ = MIL-PRF-38535 (QML)
SM = Commercial processing

DEVICE FAMILY

320 = TMS320™ DSP family

TECHNOLOGY

C = CMOS
E = CMOS EPROM
F = CMOS Flash EEPROM

DEVICE SPEED RANGE

100 MHz	200 MHz
120 MHz	233 MHz
150 MHz	250 MHz
167 MHz	300 MHz

TEMPERATURE RANGE (DEFAULT: 0°C TO 90°C)

Blank = 0°C to 90°C, commercial temperature
A = −40°C to 105°C, extended temperature

PACKAGE TYPE†

N = Plastic DIP
J = Ceramic DIP
JD = Ceramic DIP side-brazed
GB = Ceramic PGA
FZ = Ceramic CC
FN = Plastic leaded CC
FD = Ceramic leadless CC
PJ = 100-pin plastic EIAJ QFP
PQ = 132-pin plastic bumpered QFP
PZ = 100-pin plastic TQFP
PBK = 128-pin plastic TQFP
PGE = 144-pin plastic TQFP
GFN = 256-pin plastic BGA
GGU = 144-pin plastic BGA
GGP = 352-pin plastic BGA
GJC = 352-pin plastic BGA
GJL = 352-pin plastic BGA
GLS = 384-pin plastic BGA
GLW = 340-pin plastic BGA
GHK = 288-pin plastic MicroStar BGA™

DEVICE

’1x DSP:			
	10	16	
	14	17	
	15		
’2x DSP:			
	25		
	26		
’2xx DSP:			
	203	206	240
	204	209	
’3x DSP:			
	30		
	31		
	32		
’4x DSP:			
	40		
	44		
’5x DSP:			
	50	53	
	51	56	
	52	57	
’54x DSP:			
	541	545	
	542	546	
	543	548	
6x DSP:			
	6201	6205	
	6202	6211	
	6202B	6701	
	6203	6711	
	6204		

† DIP = Dual-In-Line Package
PGA = Pin Grid Array
CC = Chip Carrier
QFP = Quad Flat Package
TQFP = Thin Quad Flat Package
BGA = Ball Grid Array

Figure 4. TMS320 DSP Device Nomenclature (Including TMS320C6701)

MicroStar BGA is a trademark of Texas Instruments.

documentation support

Extensive documentation supports all TMS320 DSP family generations of devices from product announcement through applications development. The types of documentation available include: data sheets, such as this document, with design specifications; complete user's reference guides for all devices; technical briefs; development-support tools; and hardware and software applications. The following is a brief, descriptive list of support documentation specific to the C6x devices:

The *TMS320C6000 CPU and Instruction Set Reference Guide* (literature number SPRU189) describes the C6000 DSP CPU architecture, instruction set, pipeline, and associated interrupts.

The *TMS320C6000 DSP Peripherals Overview Reference Guide* (literature number SPRU190) briefly describes the functionality of the peripherals available on C6x devices, such as the external memory interface (EMIF), host-port interface (HPI), multichannel buffered serial ports (McBSPs), direct-memory-access (DMA), enhanced direct-memory-access (EDMA) controller, expansion bus (XB), clocking and phase-locked loop (PLL); and power-down modes.

The *TMS320C6000 Technical Brief* (literature number SPRU197) gives an introduction to the C62x/C67x devices, associated development tools, and third-party support.

The tools support documentation is electronically available within the Code Composer Studio™ Integrated Development Environment (IDE). For a complete listing of C6000 DSP latest documentation, visit the Texas Instruments web site on the Worldwide Web at http://www.ti.com uniform resource locator (URL).

clock PLL

All of the internal C67x clocks are generated from a single source through the CLKIN pin. This source clock either drives the PLL, which multiplies the source clock in frequency to generate the internal CPU clock, or bypasses the PLL to become the internal CPU clock.

To use the PLL to generate the CPU clock, the external PLL filter circuit must be properly designed. Table 3, Table 4, and Figure 5 show the external PLL circuitry for either x1 (PLL bypass) or x4 PLL multiply modes. Table 3 and Figure 6 show the external PLL circuitry for a system with ONLY x1 (PLL bypass) mode.

To minimize the clock jitter, a single clean power supply should power both the C67x device and the external clock oscillator circuit. Noise coupling into PLLF directly impacts PLL clock jitter. The minimum CLKIN rise and fall times should also be observed. For the input clock timing requirements, see the *input and output clocks* electricals section.

Table 3. CLKOUT1 Frequency Ranges†

PLLFREQ3 (A9)	PLLFREQ2 (D11)	PLLFREQ1 (B10)	CLKOUT1 FREQUENCY RANGE (MHZ)
0	0	0	50−140
0	0	1	65−167
0	1	0	130−167

† Due to overlap of frequency ranges when choosing the PLLFREQ, more than one frequency range can contain the CLKOUT1 frequency. Choose the lowest frequency range that includes the desired frequency. For example, for CLKOUT1 = 133 MHz, choose PLLFREQ value of 000b. For CLKOUT1 = 167 MHz, choose PLLFREQ value of 001b. PLLFREQ values other than 000b, 001b, and 010b are reserved.

Table 4. C6701 PLL Component Selection Table

CLKMODE	CLKIN RANGE (MHz)	CPU CLOCK FREQUENCY (CLKOUT1) RANGE (MHz)	CLKOUT2 RANGE (MHz)	R1 (Ω)	C1 (nF)	C2 (pF)	TYPICAL LOCK TIME (µs)‡
x4	12.5−41.7	50−167	25−83.5	60.4	27	560	75

‡ Under some operating conditions, the maximum PLL lock time may vary as much as 150% from the specified typical value. For example, if the typical lock time is specified as 100 µs, the maximum value may be as long as 250 µs.

clock PLL (continued)

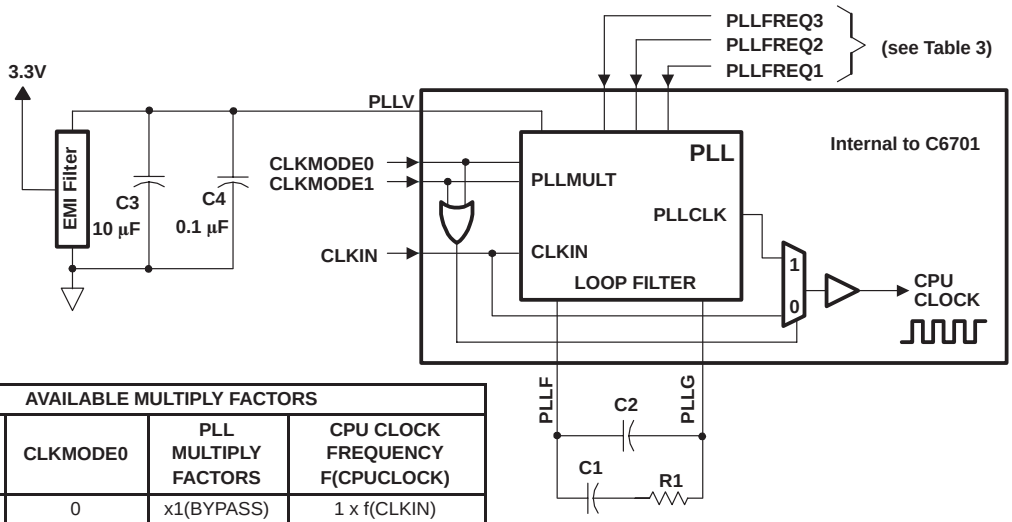

AVAILABLE MULTIPLY FACTORS			
CLKMODE1	CLKMODE0	PLL MULTIPLY FACTORS	CPU CLOCK FREQUENCY F(CPUCLOCK)
0	0	x1(BYPASS)	1 x f(CLKIN)
0	1	Reserved	Reserved
1	0	Reserved	Reserved
1	1	x4	4 x f(CLKIN)

NOTES: A. Keep the lead length and the number of vias between the PLLF pin, the PLLG pin, and R1, C1, and C2 to a minimum. In addition, place all PLL external components (R1, C1, C2, C3, C4, and the EMI Filter) as close to the C6000™ DSP device as possible. For the best performance, TI recommends that all the PLL external components be on a single side of the board without jumpers, switches, or components other than the ones shown.

B. For reduced PLL jitter, maximize the spacing between switching signals and the PLL external components (R1, C1, C2, C3, C4, and the EMI Filter).

C. The 3.3-V supply for the EMI filter must be from the same 3.3-V power plane supplying the I/O voltage, DV_{DD}.

D. EMI filter manufacturer: TDK part number ACF451832-333, 223, 153, 103. Panasonic part number EXCCET103U.

Figure 5. External PLL Circuitry for Either PLL x4 Mode or x1 (Bypass) Mode

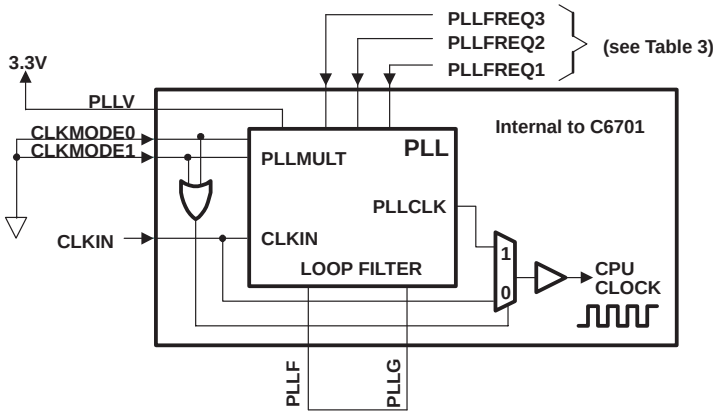

NOTES: A. For a system with ONLY PLL x1 (bypass) mode, short the PLLF terminal to the PLLG terminal.

B. The 3.3-V supply for the EMI filter must be from the same 3.3-V power plane supplying the I/O voltage, DV_{DD}.

Figure 6. External PLL Circuitry for x1 (Bypass) Mode Only

power-down mode logic

Figure 7 shows the power-down mode logic on the C6701.

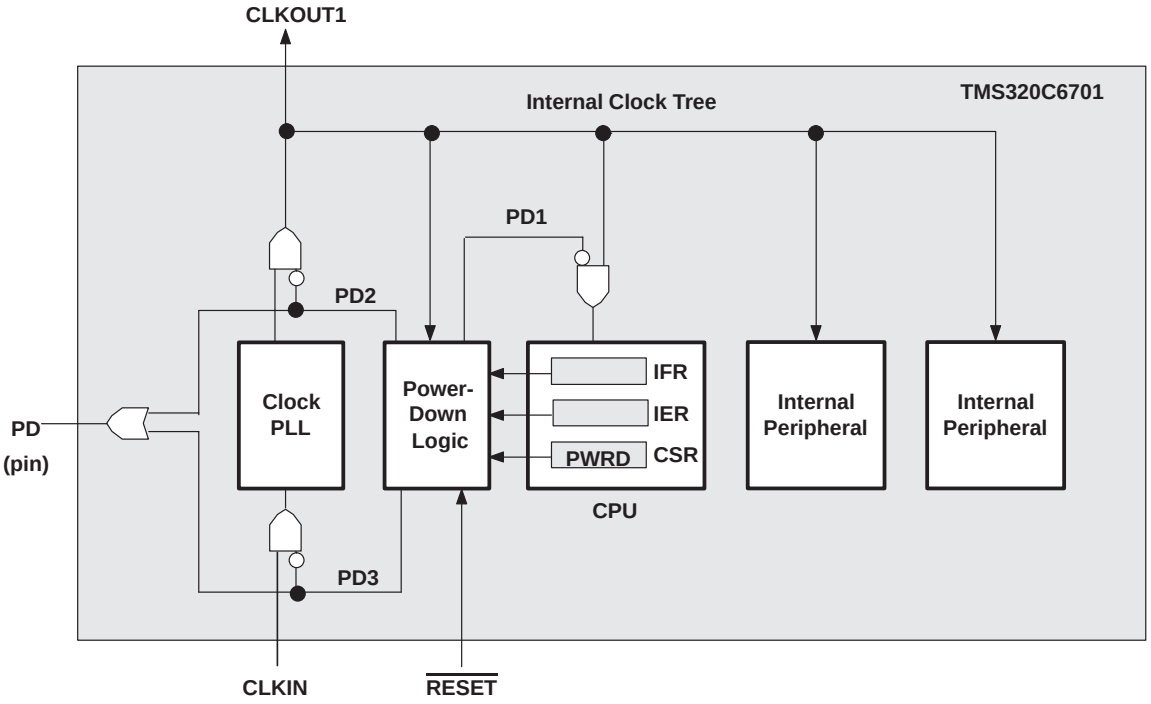

Figure 7. Power-Down Mode Logic†

triggering, wake-up, and effects

The power-down modes and their wake-up methods are programmed by setting the PWRD field (bits 15−10) of the control status register (CSR). The PWRD field of the CSR is shown in Figure 8 and described in Table 5. When writing to the CSR, all bits of the PWRD field should be set at the same time. Logic 0 should be used when “writing” to the reserved bit (bit 15) of the PWRD field. The CSR is discussed in detail in the *TMS320C6000 CPU and Instruction Set Reference Guide* (literature number SPRU189).

31							16

15	14	13	12	11	10	9	8
Reserved	Enable or Non-Enabled Interrupt Wake	Enabled Interrupt Wake	PD3	PD2	PD1		
R/W-0	R/W-0	R/W-0	R/W-0	R/W-0	R/W-0		

7							0

Legend: R/W−x = Read/write reset value

NOTE: The shadowed bits are not part of the power-down logic discussion and therefore are not covered here. For information on these other bit fields in the CSR register, see the *TMS320C6000 CPU and Instruction Set Reference Guide* (literature number SPRU189).

Figure 8. PWRD Field of the CSR Register

Power-down mode PD1 takes effect eight to nine clock cycles after the instruction that sets the PWRD bits in the CSR.

If PD1 mode is terminated by a non-enabled interrupt, the program execution returns to the instruction where PD1 took effect. If PD1 mode is terminated by an enabled interrupt, the interrupt service routine will be executed first, then the program execution returns to the instruction where PD1 took effect. The GIE bit in CSR and the NMIE bit in the interrupt enable register (IER) must also be set in order for the interrupt service routine to execute; otherwise, execution returns to the instruction where PD1 took effect upon PD1 mode termination by an enabled interrupt.

PD2 and PD3 modes can only be aborted by device reset. Table 5 summarizes all the power-down modes.

Table 5. Characteristics of the Power-Down Modes

PRWD FIELD (BITS 15−10)	POWER-DOWN MODE	WAKE-UP METHOD	EFFECT ON CHIP'S OPERATION
000000	No power-down	—	—
001001	PD1	Wake by an enabled interrupt	CPU halted (except for the interrupt logic) Power-down mode blocks the internal clock inputs at the boundary of the CPU, preventing most of the CPU's logic from switching. During PD1, DMA transactions can proceed between peripherals and internal memory.
010001	PD1	Wake by an enabled or non-enabled interrupt	
011010	PD2†	Wake by a device reset	Output clock from PLL is halted, stopping the internal clock structure from switching and resulting in the entire chip being halted. All register and internal RAM contents are preserved. All functional I/O "freeze" in the last state when the PLL clock is turned off.
011100	PD3†	Wake by a device reset	Input clock to the PLL stops generating clocks. All register and internal RAM contents are preserved. All functional I/O "freeze" in the last state when the PLL clock is turned off. Following reset, the PLL needs time to re-lock, just as it does following power-up. Wake-up from PD3 takes longer than wake-up from PD2 because the PLL needs to be re-locked.
All others	Reserved	—	—

† When entering PD2 and PD3, all functional I/O remains in the previous state. However, for peripherals which are asynchronous in nature or peripherals with an external clock source, output signals may transition in response to stimulus on the inputs. Under these conditions, peripherals will not operate according to specifications.

absolute maximum ratings over operating case temperature range (unless otherwise noted)†

Supply voltage range, CV_{DD} (see Note 1) . . . . . −0.3 V to 2.3 V
Supply voltage range, DV_{DD} (see Note 1) . . . . . −0.3 V to 4 V
Input voltage range . . . . . −0.3 V to 4 V
Output voltage range . . . . . −0.3 V to 4 V
Operating case temperature range, T_C (Default) . . . . . 0°C to 90°C
(A Version) . . . . . −40°C to 105°C
Storage temperature range, T_{stg} . . . . . −55°C to 150°C

† Stresses beyond those listed under “absolute maximum ratings” may cause permanent damage to the device. These are stress ratings only, and functional operation of the device at these or any other conditions beyond those indicated under “recommended operating conditions” is not implied. Exposure to absolute-maximum-rated conditions for extended periods may affect device reliability.

NOTE 1: All voltage values are with respect to V_{SS}.

recommended operating conditions

			MIN	NOM	MAX	UNIT
CV_{DD}	Supply voltage, Core‡	6701-120, -150	1.71	1.8	1.89	V
		6701-167 only	1.81	1.9	1.99	V
DV_{DD}	Supply voltage, I/O‡		3.14	3.30	3.46	V
V_{SS}	Supply ground		0	0	0	V
V_{IH}	High-level input voltage		2.0			V
V_{IL}	Low-level input voltage				0.8	V
I_{OH}	High-level output current				−12	mA
I_{OL}	Low-level output current				12	mA
T_C	Case temperature	Default	0		90	°C
		A Version	−40		105	°C

‡ TI DSP’s do not require specific power sequencing between the core supply and the I/O supply. However, systems should be designed to ensure that neither supply is powered up for extended periods of time if the other supply is below the proper operating voltage. Excessive exposure to these conditions can adversely affect the long term reliability of the device. System-level concerns such as bus contention may require supply sequencing to be implemented. In this case, the core supply should be powered up at the same time as, or prior to (and powered down after), the I/O buffers. For additional power supply sequencing information, see the *Power Supply Sequencing Solutions For Dual Supply Voltage DSPs* application report (literature number SLVA073).

electrical characteristics over recommended ranges of supply voltage and operating case temperature (unless otherwise noted)

PARAMETER		TEST CONDITIONS	MIN	TYP	MAX	UNIT
V_{OH}	High-level output voltage	DV_{DD} = MIN, I_{OH} = MAX	2.4			V
V_{OL}	Low-level output voltage	DV_{DD} = MIN, I_{OL} = MAX			0.6	V
I_I	Input current†	$V_I = V_{SS}$ to DV_{DD}			±10	uA
I_{OZ}	Off-state output current	$V_O = DV_{DD}$ or 0 V			±10	uA
I_{DD2V}	Supply current, CPU + CPU memory access‡	CV_{DD} = NOM, CPU clock = 150 MHz		470		mA
		CV_{DD} = NOM, CPU clock = 120 MHz		380		
I_{DD2V}	Supply current, peripherals‡	CV_{DD} = NOM, CPU clock = 150 MHz		250		mA
		CV_{DD} = NOM, CPU clock = 120 MHz		200		
I_{DD3V}	Supply current, I/O pins‡	DV_{DD} = NOM, CPU clock = 150 MHz		85		mA
		DV_{DD} = NOM, CPU clock = 120 MHz		70		
C_i	Input capacitance				10	pF
C_o	Output capacitance				10	pF

† $\overline{\text{TMS}}$ and TDI are not included due to internal pullups.
$\overline{\text{TRST}}$ is not included due to internal pulldown.

‡ Measured with average activity (50% high / 50% low power). For more detailed information on CPU/peripheral/I/O activity, see the *TMS320C6000 Power Consumption Summary* application report (literature number SPRA486).

PARAMETER MEASUREMENT INFORMATION

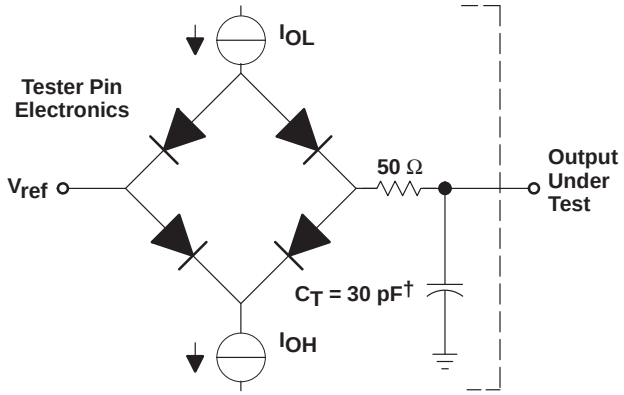

† Typical distributed load circuit capacitance.

signal-transition levels

All input and output timing parameters are referenced to 1.5 V for both “0” and “1” logic levels.

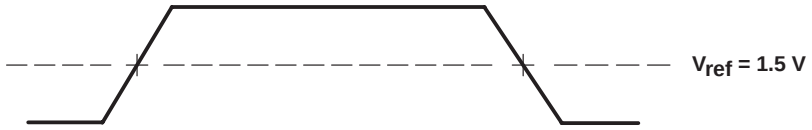

Figure 9. Input and Output Voltage Reference Levels for ac Timing Measurements

INPUT AND OUTPUT CLOCKS

timing requirements for CLKIN (C6701-150, -167 devices only)†‡ (see Figure 10)

NO.			C6701-150				C6701-167				UNIT
			CLKMODE = x4		CLKMODE = x1		CLKMODE = x4		CLKMODE = x1		
			MIN	MAX	MIN	MAX	MIN	MAX	MIN	MAX	
1	$t_{c(CLKIN)}$	Cycle time, CLKIN	26.7		6.7		24		6		ns
2	$t_{w(CLKINH)}$	Pulse duration, CLKIN high	0.4C		0.45C		0.4C		0.45C		ns
3	$t_{w(CLKINL)}$	Pulse duration, CLKIN low	0.4C		0.45C		0.4C		0.45C		ns
4	$t_{t(CLKIN)}$	Transition time, CLKIN		5		0.6		5		0.6	ns

† The reference points for the rise and fall transitions are measured at 20% and 80%, respectively, of V_{IH}.
‡ C = CLKIN cycle time in ns. For example, when CLKIN frequency is 10 MHz, use C = 100 ns.

timing requirements for CLKIN (C6701-120 device only)†‡ (see Figure 10)

NO.			C6701-120				UNIT
			CLKMODE = x4		CLKMODE = x1		
			MIN	MAX	MIN	MAX	
1	$t_{c(CLKIN)}$	Cycle time, CLKIN	33.3		8.3		ns
2	$t_{w(CLKINH)}$	Pulse duration, CLKIN high	0.4C		0.45C		ns
3	$t_{w(CLKINL)}$	Pulse duration, CLKIN low	0.4C		0.45C		ns
4	$t_{t(CLKIN)}$	Transition time, CLKIN		5		0.6	ns

† The reference points for the rise and fall transitions are measured at 20% and 80%, respectively, of V_{IH}.
‡ C = CLKIN cycle time in ns. For example, when CLKIN frequency is 10 MHz, use C = 100 ns.

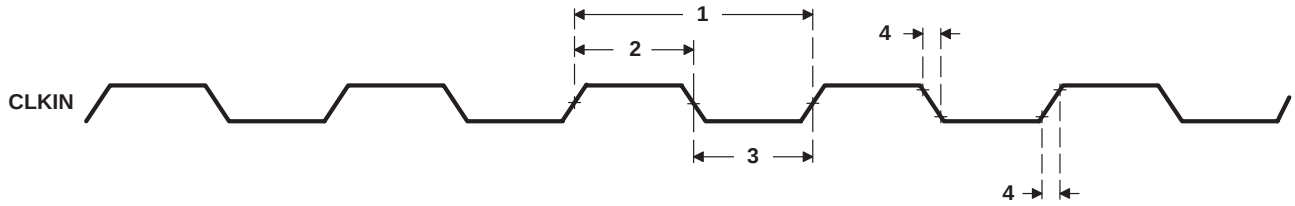

Figure 10. CLKIN Timings

INPUT AND OUTPUT CLOCKS (CONTINUED)

switching characteristics for CLKOUT1†‡ (see Figure 11)

NO.	PARAMETER		C6701-120 C6701-150 C6701-167				UNIT
			CLKMODE = X4		CLKMODE = X1		
			MIN	MAX	MIN	MAX	
1	$t_{c(CKO1)}$	Cycle time, CLKOUT1	P − 0.7	P + 0.7	P − 0.7	P + 0.7	ns
2	$t_{w(CKO1H)}$	Pulse duration, CLKOUT1 high	(P/2) − 0.5	(P/2) + 0.5	PH − 0.5	PH + 0.5	ns
3	$t_{w(CKO1L)}$	Pulse duration, CLKOUT1 low	(P/2) − 0.5	(P/2) + 0.5	PL − 0.5	PL + 0.5	ns
4	$t_{t(CKO1)}$	Transition time, CLKOUT1		0.6		0.6	ns

† P = 1/CPU clock frequency in nanoseconds (ns).
‡ PH is the high period of CLKIN in ns and PL is the low period of CLKIN in ns.

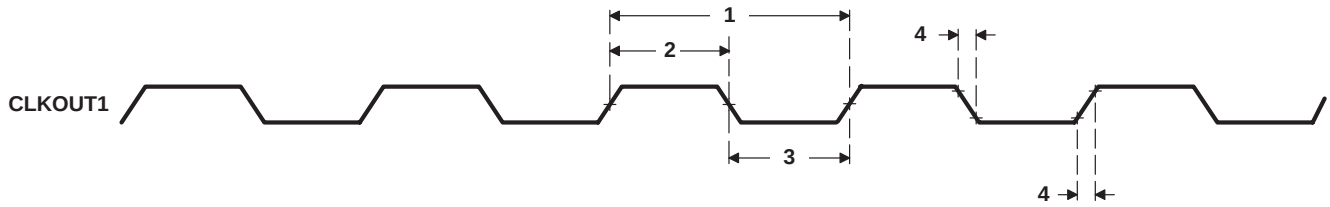

Figure 11. CLKOUT1 Timings

switching characteristics for CLKOUT2§ (see Figure 12)

NO.	PARAMETER		C6701-120 C6701-150 C6701-167		UNIT
			MIN	MAX	
1	$t_{c(CKO2)}$	Cycle time, CLKOUT2	2P − 0.7	2P + 0.7	ns
2	$t_{w(CKO2H)}$	Pulse duration, CLKOUT2 high	P − 0.7	P + 0.7	ns
3	$t_{w(CKO2L)}$	Pulse duration, CLKOUT2 low	P − 0.7	P + 0.7	ns
4	$t_{t(CKO2)}$	Transition time, CLKOUT2		0.6	ns

§ P = 1/CPU clock frequency in ns.

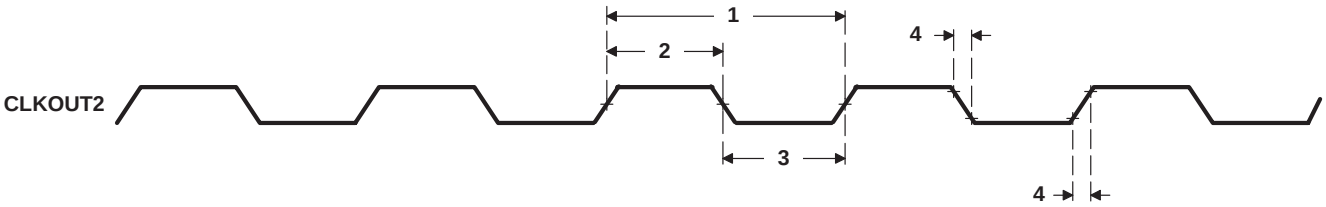

Figure 12. CLKOUT2 Timings

INPUT AND OUTPUT CLOCKS (CONTINUED)

SDCLK, SSCLK timing parameters

SDCLK timing parameters are the same as CLKOUT2 parameters.

SSCLK timing parameters are the same as CLKOUT1 or CLKOUT2 parameters, depending on SSCLK configuration.

switching characteristics for the relation of SSCLK, SDCLK, and CLKOUT2 to CLKOUT1 (see Figure 13)

NO.	PARAMETER		C6701-120 C6701-150 C6701-167		UNIT
			MIN	MAX	
1	$t_{d(CKO1-SSCLK)}$	Delay time, CLKOUT1 edge to SSCLK edge	−0.8	3.4	ns
2	$t_{d(CKO1-SSCLK1/2)}$	Delay time, CLKOUT1 edge to SSCLK edge (1/2 clock rate)	−1.0	3.0	ns
3	$t_{d(CKO1-CKO2)}$	Delay time, CLKOUT1 edge to CLKOUT2 edge	−1.5	2.5	ns
4	$t_{d(CKO1-SDCLK)}$	Delay time, CLKOUT1 edge to SDCLK edge	−1.5	1.9	ns

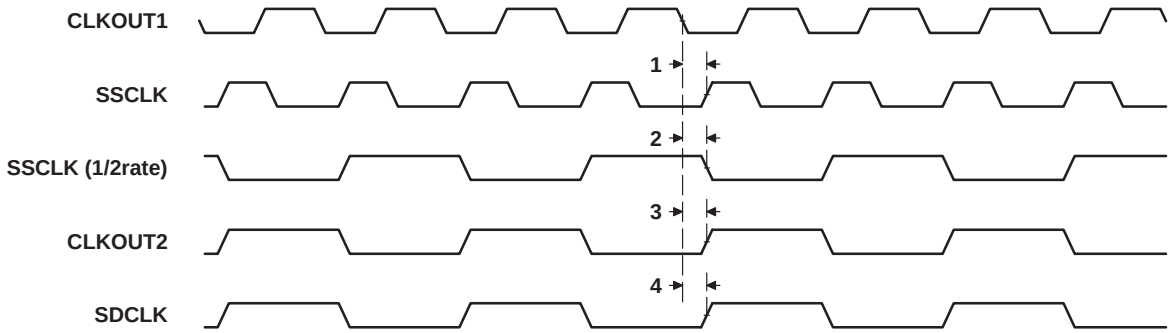

Figure 13. Relation of CLKOUT2, SDCLK, and SSCLK to CLKOUT1

ASYNCHRONOUS MEMORY TIMING

timing requirements for asynchronous memory cycles† (see Figure 14 and Figure 15)

NO.			C6701-120 C6701-150 C6701-167		UNIT
			MIN	MAX	
6	$t_{su(EDV-CKO1H)}$	Setup time, read EDx valid before CLKOUT1 high	4.5		ns
7	$t_{h(CKO1H-EDV)}$	Hold time, read EDx valid after CLKOUT1 high	1.5		ns
10	$t_{su(ARDY-CKO1H)}$	Setup time, ARDY valid before CLKOUT1 high	3.5		ns
11	$t_{h(CKO1H-ARDY)}$	Hold time, ARDY valid after CLKOUT1 high	1.5		ns

† To ensure data setup time, simply program the strobe width wide enough. ARDY is internally synchronized. If ARDY does meet setup or hold time, it may be recognized in the current cycle or the next cycle. Thus, ARDY can be an asynchronous input.

switching characteristics for asynchronous memory cycles‡ (see Figure 14 and Figure 15)

NO.	PARAMETER		C6701-120 C6701-150 C6701-167		UNIT
			MIN	MAX	
1	$t_{d(CKO1H-CEV)}$	Delay time, CLKOUT1 high to $\overline{CEx}$ valid	−1.0	4.5	ns
2	$t_{d(CKO1H-BEV)}$	Delay time, CLKOUT1 high to $\overline{BEx}$ valid		4.5	ns
3	$t_{d(CKO1H-BEIV)}$	Delay time, CLKOUT1 high to $\overline{BEx}$ invalid	−1.0		ns
4	$t_{d(CKO1H-EAV)}$	Delay time, CLKOUT1 high to EAx valid		4.5	ns
5	$t_{d(CKO1H-EAIV)}$	Delay time, CLKOUT1 high to EAx invalid	−1.0		ns
8	$t_{d(CKO1H-AOEV)}$	Delay time, CLKOUT1 high to $\overline{AOE}$ valid	−1.0	4.5	ns
9	$t_{d(CKO1H-AREV)}$	Delay time, CLKOUT1 high to $\overline{ARE}$ valid	−0.5	4.5	ns
12	$t_{d(CKO1H-EDV)}$	Delay time, CLKOUT1 high to EDx valid		4.5	ns
13	$t_{d(CKO1H-EDIV)}$	Delay time, CLKOUT1 high to EDx invalid	−1.0		ns
14	$t_{d(CKO1H-AWEV)}$	Delay time, CLKOUT1 high to $\overline{AWE}$ valid	−1.0	4.5	ns

‡ The minimum delay is also the minimum output hold after CLKOUT1 high.

ASYNCHRONOUS MEMORY TIMING (CONTINUED)

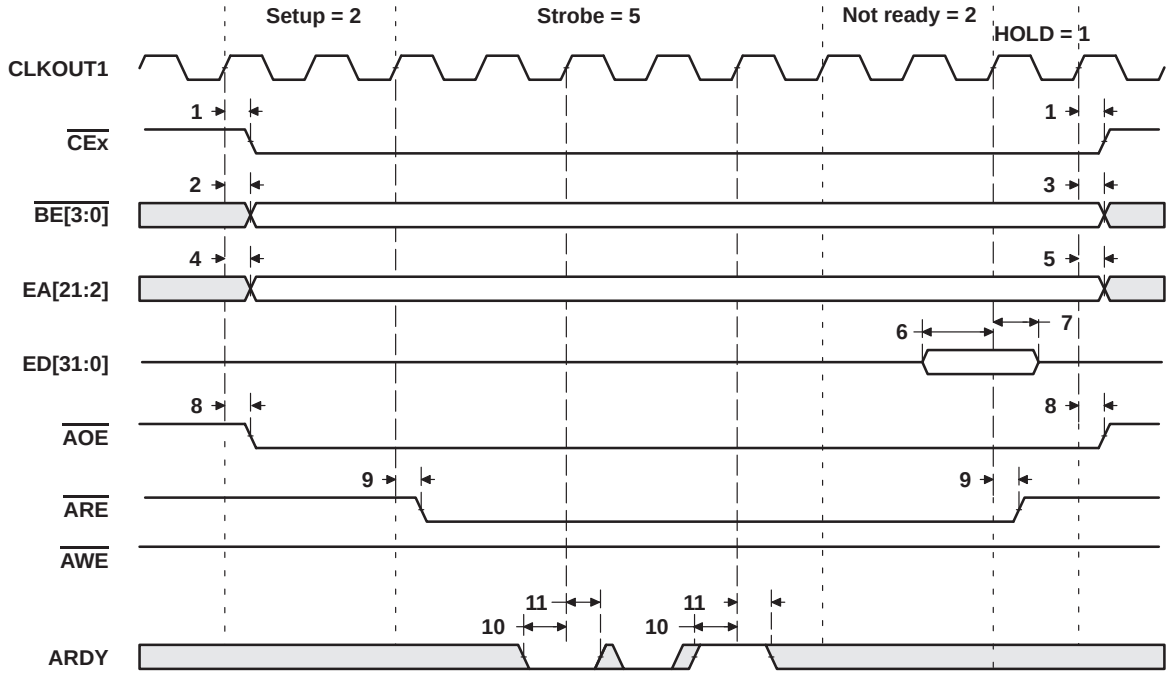

Figure 14. Asynchronous Memory Read Timing

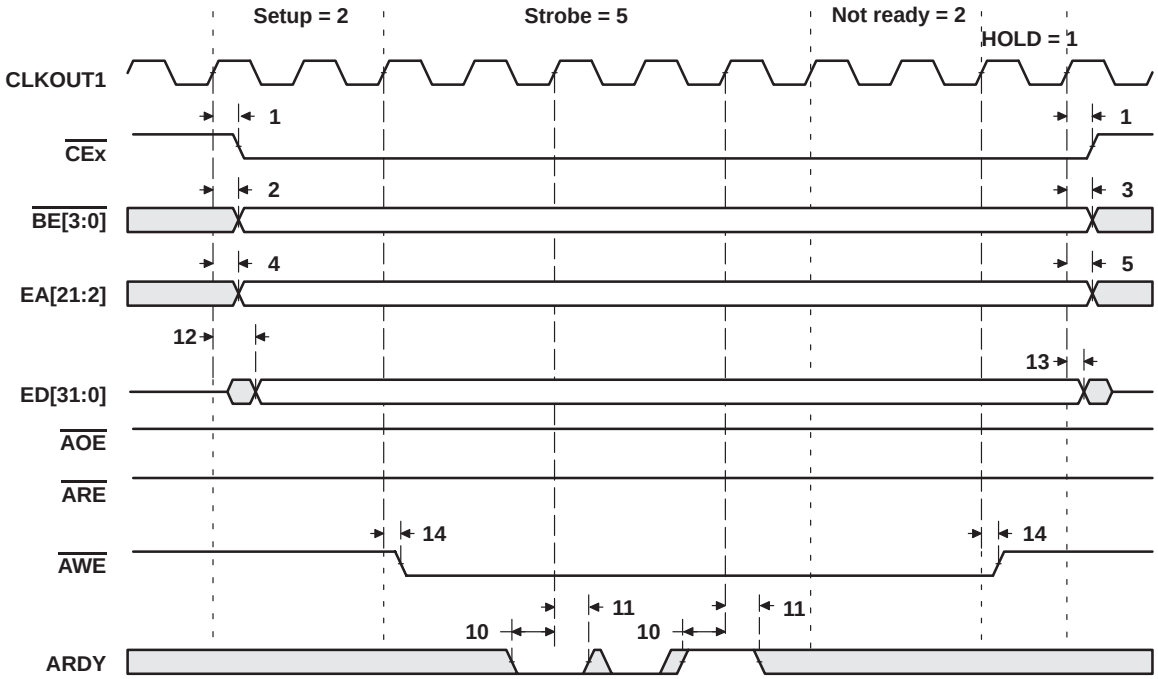

Figure 15. Asynchronous Memory Write Timing

SYNCHRONOUS-BURST MEMORY TIMING

timing requirements for synchronous-burst SRAM cycles (full-rate SSCLK) (see Figure 16)

NO.			’C6701-120		C6701-150 C6701-167		UNIT
			MIN	MAX	MIN	MAX	
7	$t_{su(EDV-SSCLKH)}$	Setup time, read EDx valid before SSCLK high	2.0		2.0		ns
8	$t_{h(SSCLKH-EDV)}$	Hold time, read EDx valid after SSCLK high	2.9		2.1		ns

switching characteristics for synchronous-burst SRAM cycles† (full-rate SSCLK) (see Figure 16 and Figure 17)

NO.	PARAMETER		’C6701-120		C6701-150 C6701-167		UNIT
			MIN	MAX	MIN	MAX	
1	$t_{osu(CEV-SSCLKH)}$	Output setup time, $\overline{CEx}$ valid before SSCLK high	0.5P − 1.3		0.5P − 1.3		ns
2	$t_{oh(SSCLKH-CEV)}$	Output hold time, $\overline{CEx}$ valid after SSCLK high	0.5P − 2.9		0.5P − 2.3		ns
3	$t_{osu(BEV-SSCLKH)}$	Output setup time, $\overline{BEx}$ valid before SSCLK high	0.5P − 1.3		0.5P − 1.6		ns
4	$t_{oh(SSCLKH-BEIV)}$	Output hold time, $\overline{BEx}$ invalid after SSCLK high	0.5P − 2.9		0.5P − 2.3		ns
5	$t_{osu(EAV-SSCLKH)}$	Output setup time, EAx valid before SSCLK high	0.5P − 1.3		0.5P − 1.7		ns
6	$t_{oh(SSCLKH-EAIV)}$	Output hold time, EAx invalid after SSCLK high	0.5P − 2.9		0.5P − 2.3		ns
9	$t_{osu(ADSV-SSCLKH)}$	Output setup time, $\overline{SSADS}$ valid before SSCLK high	0.5P − 1.3		0.5P − 1.3		ns
10	$t_{oh(SSCLKH-ADSV)}$	Output hold time, $\overline{SSADS}$ valid after SSCLK high	0.5P − 2.9		0.5P − 2.3		ns
11	$t_{osu(OEV-SSCLKH)}$	Output setup time, $\overline{SSOE}$ valid before SSCLK high	0.5P − 1.3		0.5P − 1.3		ns
12	$t_{oh(SSCLKH-OEV)}$	Output hold time, $\overline{SSOE}$ valid after SSCLK high	0.5P − 2.9		0.5P − 2.3		ns
13	$t_{osu(EDV-SSCLKH)}$	Output setup time, EDx valid before SSCLK high	0.5P − 1.3		0.5P − 1.3		ns
14	$t_{oh(SSCLKH-EDIV)}$	Output hold time, EDx invalid after SSCLK high	0.5P − 2.9		0.5P − 2.3		ns
15	$t_{osu(WEV-SSCLKH)}$	Output setup time, $\overline{SSWE}$ valid before SSCLK high	0.5P − 1.3		0.5P − 1.3		ns
16	$t_{oh(SSCLKH-WEV)}$	Output hold time, $\overline{SSWE}$ valid after SSCLK high	0.5P − 2.9		0.5P − 2.3		ns

† When the PLL is used (CLKMODE x4), P = 1/CPU clock frequency in ns. For example, when running parts at 167 MHz, use P = 6 ns. For CLKMODE x1, 0.5P is defined as PH (pulse duration of CLKIN high) for all output setup times; 0.5P is defined as PL (pulse duration of CLKIN low) for all output hold times.

SYNCHRONOUS-BURST MEMORY TIMING (CONTINUED)

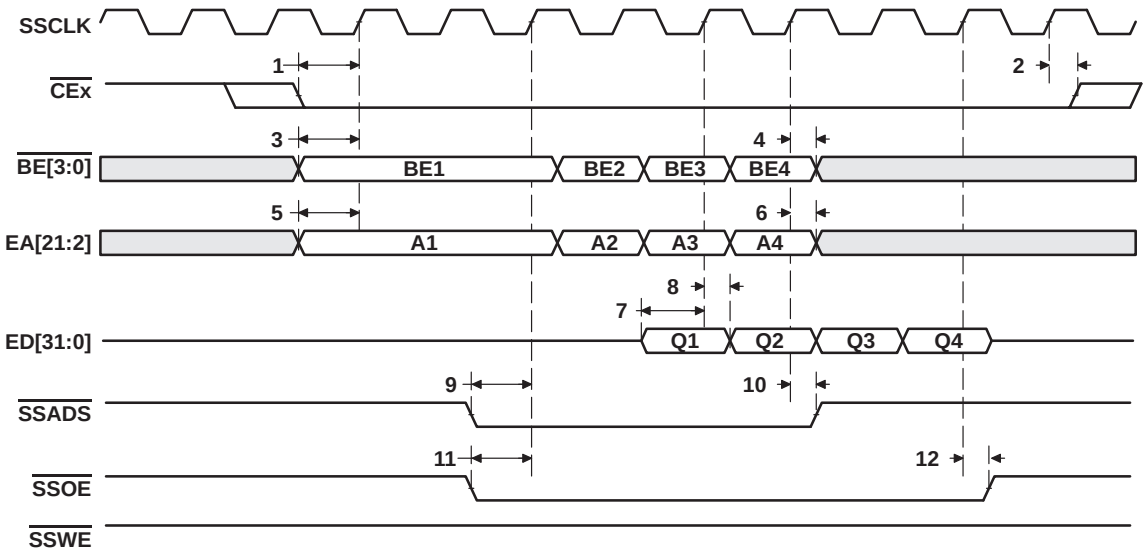

Figure 16. SBSRAM Read Timing (Full-Rate SSCLK)

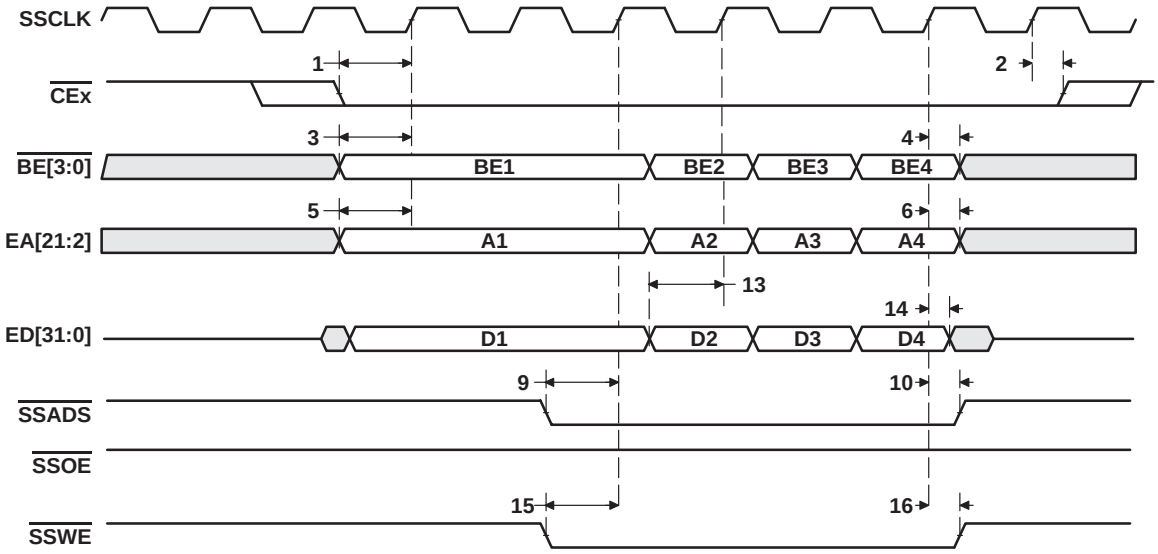

Figure 17. SBSRAM Write Timing (Full-Rate SSCLK)

SYNCHRONOUS-BURST MEMORY TIMING (CONTINUED)

timing requirements for synchronous-burst SRAM cycles (half-rate SSCLK) (see Figure 18)

NO.			C6701-120 C6701-150 C6701-167		UNIT
			MIN	MAX	
7	$t_{su(EDV-SSCLKH)}$	Setup time, read EDx valid before SSCLK high	3.6		ns
8	$t_{h(SSCLKH-EDV)}$	Hold time, read EDx valid after SSCLK high	1.5		ns

switching characteristics for synchronous-burst SRAM cycles† (half-rate SSCLK) (see Figure 18 and Figure 19)

NO.	PARAMETER		C6701-120		C6701-150 C6701-167		UNIT
			MIN	MAX	MIN	MAX	
1	$t_{osu(CEV-SSCLKH)}$	Output setup time, $\overline{CEx}$ valid before SSCLK high	1.5P − 4.5		1.5P − 4.5		ns
2	$t_{oh(SSCLKH-CEV)}$	Output hold time, $\overline{CEx}$ valid after SSCLK high	0.5P − 2.5		0.5P − 2		ns
3	$t_{osu(BEV-SSCLKH)}$	Output setup time, $\overline{BEx}$ valid before SSCLK high	1.5P − 4.5		1.5P − 4.5		ns
4	$t_{oh(SSCLKH-BEIV)}$	Output hold time, $\overline{BEx}$ invalid after SSCLK high	0.5P − 2.5		0.5P − 2		ns
5	$t_{osu(EAV-SSCLKH)}$	Output setup time, EAx valid before SSCLK high	1.5P − 4.5		1.5P − 4.5		ns
6	$t_{oh(SSCLKH-EAIV)}$	Output hold time, EAx invalid after SSCLK high	0.5P − 2.5		0.5P − 2		ns
9	$t_{osu(ADSV-SSCLKH)}$	Output setup time, $\overline{SSADS}$ valid before SSCLK high	1.5P − 4.5		1.5P − 4.5		ns
10	$t_{oh(SSCLKH-ADSV)}$	Output hold time, $\overline{SSADS}$ valid after SSCLK high	0.5P − 2.5		0.5P − 2		ns
11	$t_{osu(OEV-SSCLKH)}$	Output setup time, $\overline{SSOE}$ valid before SSCLK high	1.5P − 4.5		1.5P − 4.5		ns
12	$t_{oh(SSCLKH-OEV)}$	Output hold time, $\overline{SSOE}$ valid after SSCLK high	0.5P − 2.5		0.5P − 2		ns
13	$t_{osu(EDV-SSCLKH)}$	Output setup time, EDx valid before SSCLK high	1.5P − 4.5		1.5P − 4.5		ns
14	$t_{oh(SSCLKH-EDIV)}$	Output hold time, EDx invalid after SSCLK high	0.5P − 2.5		0.5P − 2		ns
15	$t_{osu(WEV-SSCLKH)}$	Output setup time, $\overline{SSWE}$ valid before SSCLK high	1.5P − 4.5		1.5P − 4.5		ns
16	$t_{oh(SSCLKH-WEV)}$	Output hold time, $\overline{SSWE}$ valid after SSCLK high	0.5P − 2.5		0.5P − 2		ns

† When the PLL is used (CLKMODE x4), P = 1/CPU clock frequency in ns. For example, when running parts at 167 MHz, use P = 6 ns.
For CLKMODE x1:
1.5P = P + PH, where P = 1/CPU clock frequency, and PH = pulse duration of CLKIN high.
0.5P = PL, where PL = pulse duration of CLKIN low.

SYNCHRONOUS-BURST MEMORY TIMING (CONTINUED)

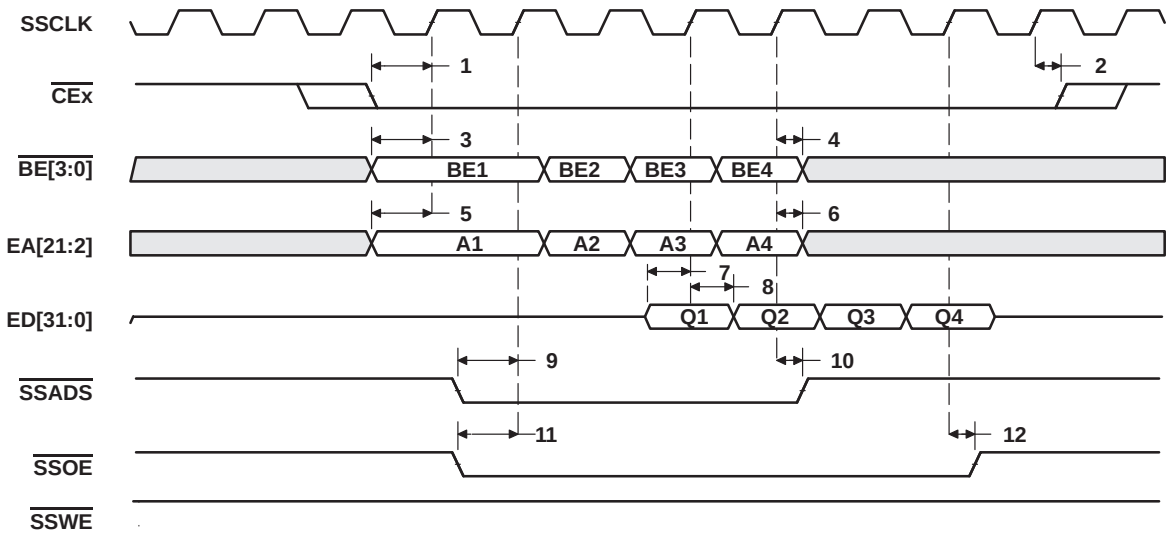

Figure 18. SBSRAM Read Timing (1/2 Rate SSCLK)

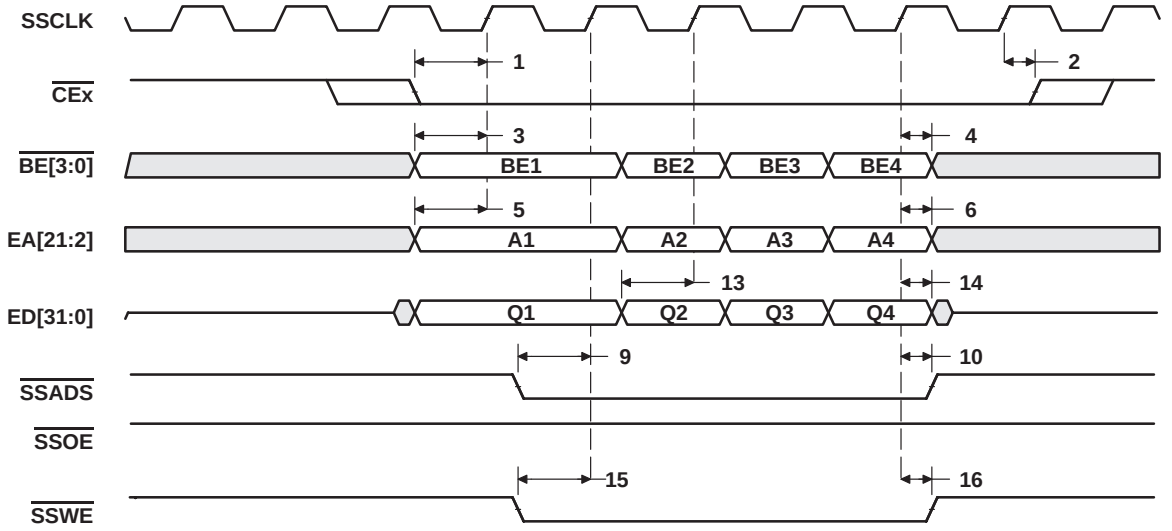

Figure 19. SBSRAM Write Timing (1/2 Rate SSCLK)

SYNCHRONOUS DRAM TIMING

timing requirements for synchronous DRAM cycles (see Figure 20)

NO.			C6701-120 C6701-150 C6701-167		UNIT
			MIN	MAX	
7	$t_{su(EDV-SDCLKH)}$	Setup time, read EDx valid before SDCLK high	1.8		ns
8	$t_{h(SDCLKH-EDV)}$	Hold time, read EDx valid after SDCLK high	3		ns

switching characteristics for synchronous DRAM cycles† (see Figure 20−Figure 25)

NO.	PARAMETER		C6701-120		C6701-150 C6701-167		UNIT
			MIN	MAX	MIN	MAX	
1	$t_{osu(CEV-SDCLKH)}$	Output setup time, $\overline{CEx}$ valid before SDCLK high	1.5P − 4		1.5P − 4		ns
2	$t_{oh(SDCLKH-CEV)}$	Output hold time, $\overline{CEx}$ valid after SDCLK high	0.5P − 1.9		0.5P − 1.5		ns
3	$t_{osu(BEV-SDCLKH)}$	Output setup time, $\overline{BEx}$ valid before SDCLK high	1.5P − 4		1.5P − 4		ns
4	$t_{oh(SDCLKH-BEIV)}$	Output hold time, $\overline{BEx}$ invalid after SDCLK high	0.5P − 1.9		0.5P − 1.5		ns
5	$t_{osu(EAV-SDCLKH)}$	Output setup time, EAx valid before SDCLK high	1.5P − 4		1.5P − 4		ns
6	$t_{oh(SDCLKH-EAIV)}$	Output hold time, EAx invalid after SDCLK high	0.5P − 1.9		0.5P − 1.5		ns
9	$t_{osu(SDCAS-SDCLKH)}$	Output setup time, $\overline{SDCAS}$ valid before SDCLK high	1.5P − 4		1.5P − 4		ns
10	$t_{oh(SDCLKH-SDCAS)}$	Output hold time, $\overline{SDCAS}$ valid after SDCLK high	0.5P − 1.9		0.5P − 1.5		ns
11	$t_{osu(EDV-SDCLKH)}$	Output setup time, EDx valid before SDCLK high	1.5P − 4		1.5P − 4		ns
12	$t_{oh(SDCLKH-EDIV)}$	Output hold time, EDx invalid after SDCLK high	0.5P − 1.9		0.5P − 1.5		ns
13	$t_{osu(SDWE-SDCLKH)}$	Output setup time, $\overline{SDWE}$ valid before SDCLK high	1.5P − 4		1.5P − 4		ns
14	$t_{oh(SDCLKH-SDWE)}$	Output hold time, $\overline{SDWE}$ valid after SDCLK high	0.5P − 1.9		0.5P − 1.5		ns
15	$t_{osu(SDA10V-SDCLKH)}$	Output setup time, SDA10 valid before SDCLK high	1.5P − 4		1.5P − 4		ns
16	$t_{oh(SDCLKH-SDA10IV)}$	Output hold time, SDA10 invalid after SDCLK high	0.5P − 1.9		0.5P − 1.5		ns
17	$t_{osu(SDRAS-SDCLKH)}$	Output setup time, $\overline{SDRAS}$ valid before SDCLK high	1.5P − 4		1.5P − 4		ns
18	$t_{oh(SDCLKH-SDRAS)}$	Output hold time, $\overline{SDRAS}$ valid after SDCLK high	0.5P − 1.9		0.5P − 1.5		ns

† When the PLL is used (CLKMODE x4), P = 1/CPU clock frequency in ns. For example, when running parts at 167 MHz, use P = 6 ns.
For CLKMODE x1:
1.5P = P + PH, where P = 1/CPU clock frequency, and PH = pulse duration of CLKIN high.
0.5P = PL, where PL = pulse duration of CLKIN low.

SYNCHRONOUS DRAM TIMING (CONTINUED)

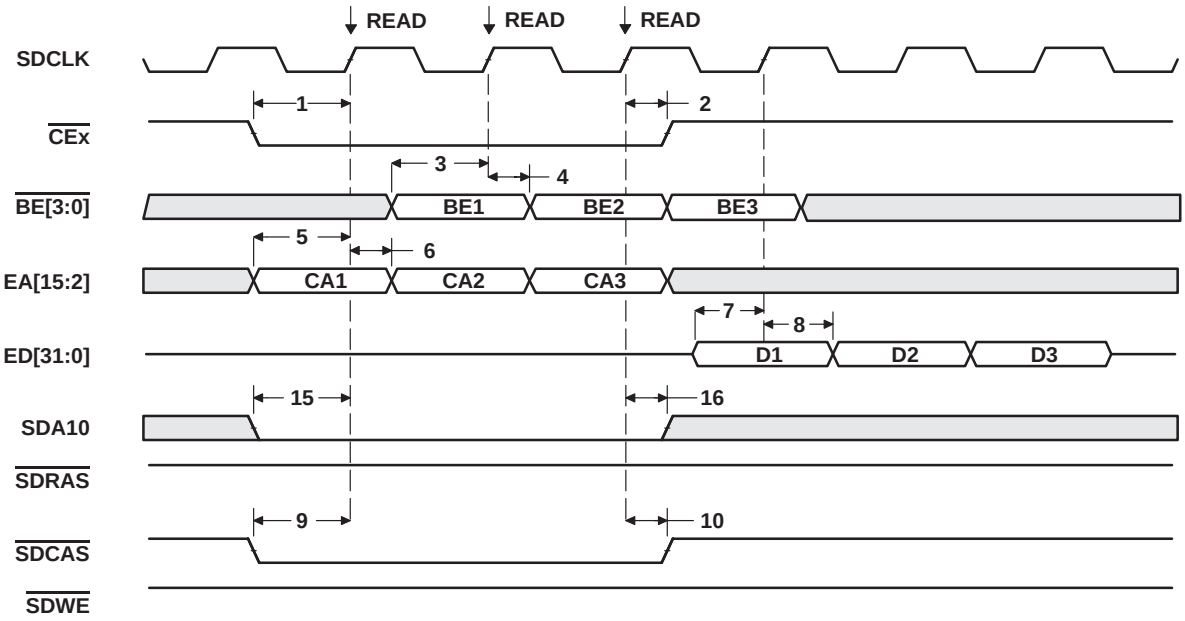

Figure 20. Three SDRAM Read Commands

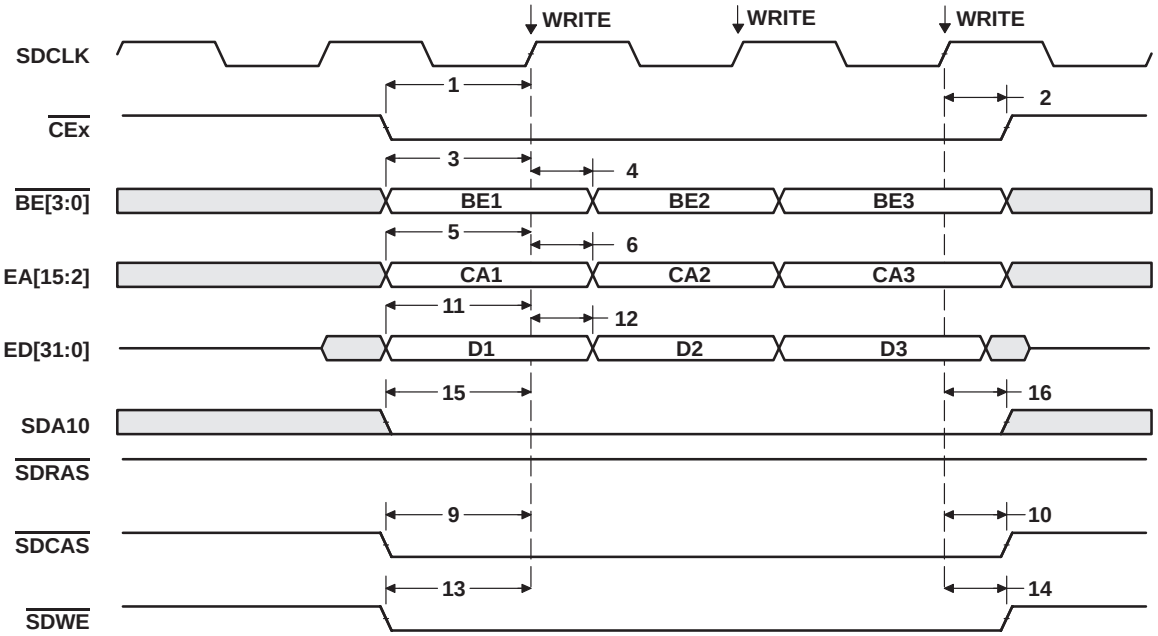

Figure 21. Three SDRAM Write Commands

SYNCHRONOUS DRAM TIMING (CONTINUED)

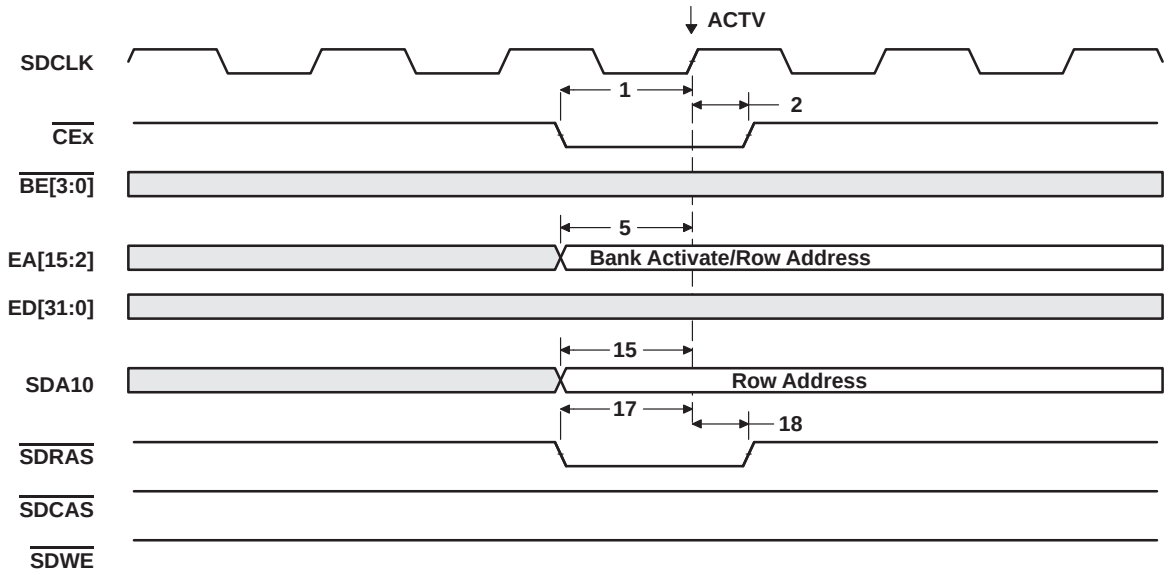

Figure 22. SDRAM ACTV Command

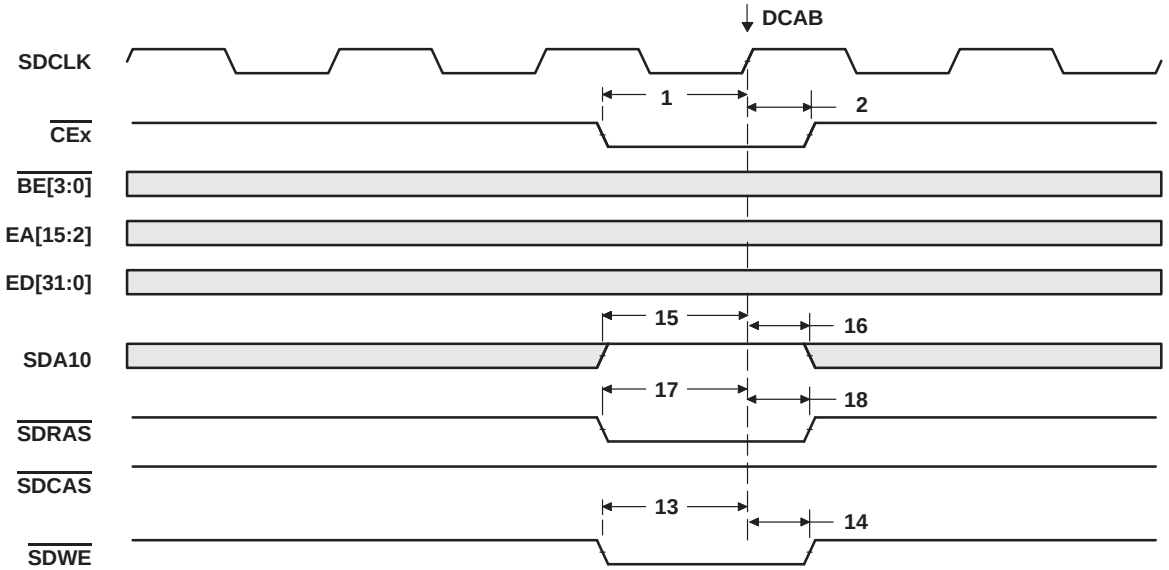

Figure 23. SDRAM DCAB Command

SYNCHRONOUS DRAM TIMING (CONTINUED)

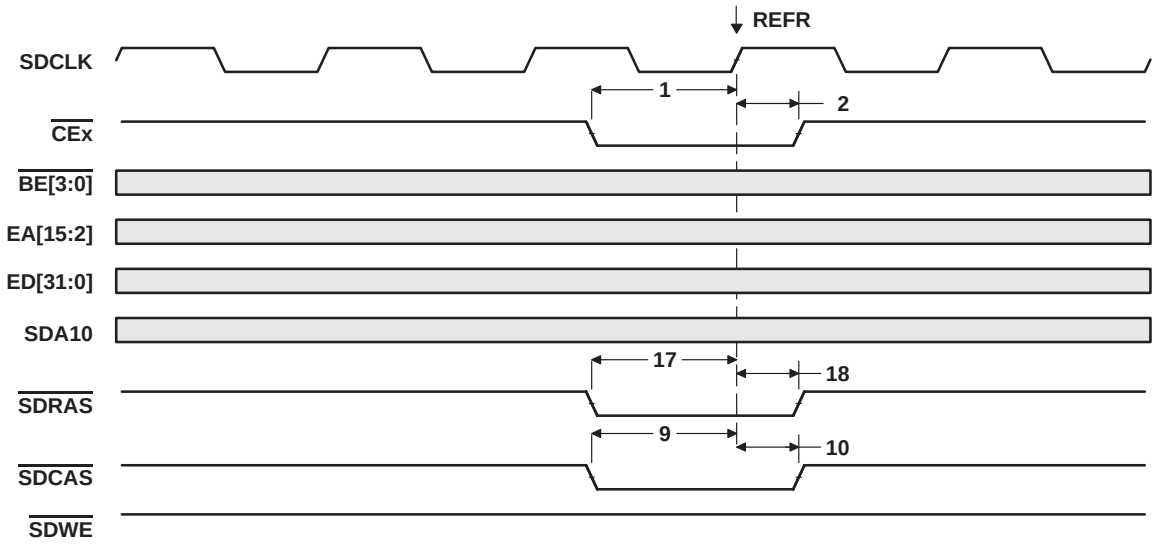

Figure 24. SDRAM REFR Command

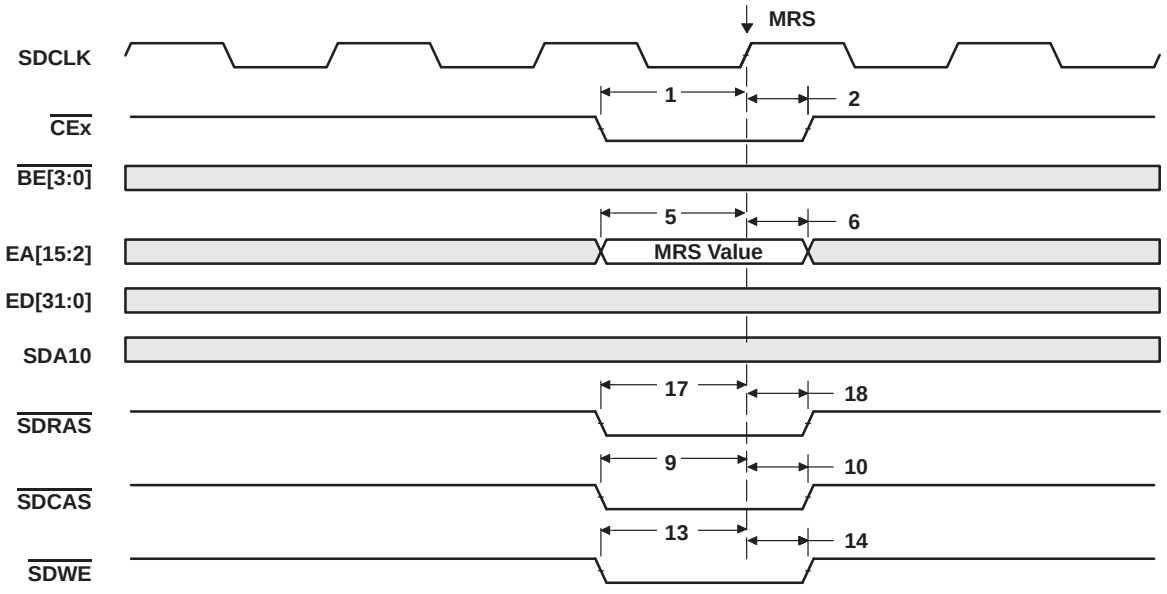

Figure 25. SDRAM MRS Command

$\overline{\text{HOLD}}$/$\overline{\text{HOLDA}}$ TIMING

timing requirements for the hold/hold acknowledge cycles† (see Figure 26)

NO.			C6701-120 C6701-150 C6701-167		UNIT
			MIN	MAX	
1	$t_{su(HOLDH-CKO1H)}$	Setup time, $\overline{\text{HOLD}}$ high before CLKOUT1 high	5		ns
2	$t_{h(CKO1H-HOLDL)}$	Hold time, $\overline{\text{HOLD}}$ low after CLKOUT1 high	2		ns

† $\overline{\text{HOLD}}$ is synchronized internally. Therefore, if setup and hold times are not met, it will either be recognized in the current cycle or in the next cycle. Thus, $\overline{\text{HOLD}}$ can be an asynchronous input.

switching characteristics for the hold/hold acknowledge cycles‡ (see Figure 26)

NO.	PARAMETER		C6701-120 C6701-150 C6701-167		UNIT
			MIN	MAX	
3	$t_{R(HOLDL-EMHZ)}$	Response time, $\overline{\text{HOLD}}$ low to EMIF high impedance	4P	§	ns
4	$t_{R(EMHZ-HOLDAL)}$	Response time, EMIF high impedance to $\overline{\text{HOLDA}}$ low		2P	ns
5	$t_{R(HOLDH-HOLDAH)}$	Response time, $\overline{\text{HOLD}}$ high to $\overline{\text{HOLDA}}$ high	4P	7P	ns
6	$t_{d(CKO1H-HOLDAL)}$	Delay time, CLKOUT1 high to $\overline{\text{HOLDA}}$ valid	1	8	ns
7	$t_{d(CKO1H-BHZ)}$	Delay time, CLKOUT1 high to EMIF Bus high impedance¶	1	8	ns
8	$t_{d(CKO1H-BLZ)}$	Delay time, CLKOUT1 high to EMIF Bus low impedance¶	1	12	ns
9	$t_{R(HOLDH-BLZ)}$	Response time, $\overline{\text{HOLD}}$ high to EMIF Bus low impedance¶	3P	6P	ns

‡ P = 1/CPU clock frequency in ns. For example, when running parts at 167 MHz, use P = 6 ns.
§ All pending EMIF transactions are allowed to complete before $\overline{\text{HOLDA}}$ is asserted. The worst cases for this is an asynchronous read or write with external ARDY used or a minimum of eight consecutive SDRAM reads or writes when RBTR8 = 1. If no bus transactions are occurring, then the minimum delay time can be achieved. Also, bus hold can be indefinitely delayed by setting the NOHOLD = 1.
¶ EMIF Bus consists of $\overline{\text{CE}}$[3:0], $\overline{\text{BE}}$[3:0], ED[31:0], EA[21:2], $\overline{\text{ARE}}$, $\overline{\text{AOE}}$, $\overline{\text{AWE}}$, $\overline{\text{SSADS}}$, $\overline{\text{SSOE}}$, $\overline{\text{SSWE}}$, SDA10, $\overline{\text{SDRAS}}$, $\overline{\text{SDCAS}}$, and $\overline{\text{SDWE}}$.

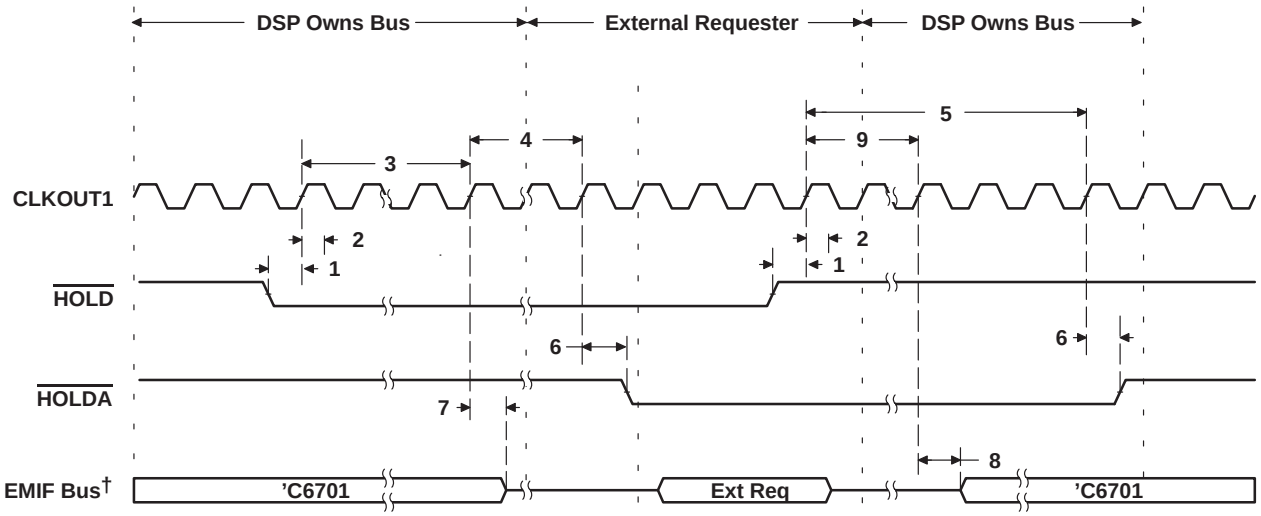

† EMIF Bus consists of $\overline{\text{CE}}$[3:0], $\overline{\text{BE}}$[3:0], ED[31:0], EA[21:2], $\overline{\text{ARE}}$, $\overline{\text{AOE}}$, $\overline{\text{AWE}}$, $\overline{\text{SSADS}}$, $\overline{\text{SSOE}}$, $\overline{\text{SSWE}}$, SDA10, $\overline{\text{SDRAS}}$, $\overline{\text{SDCAS}}$, and $\overline{\text{SDWE}}$.

Figure 26. $\overline{\text{HOLD}}$/$\overline{\text{HOLDA}}$ Timing

RESET TIMING

timing requirements for reset (see Figure 27)

NO.			C6701-120 C6701-150 C6701-167 MIN	C6701-120 C6701-150 C6701-167 MAX	UNIT
1	$t_{w(RESET)}$	Width of the $\overline{RESET}$ pulse (PLL stable)†	10		CLKOUT1 cycles
		Width of the $\overline{RESET}$ pulse (PLL needs to sync up)‡	250		µs

† This parameter applies to CLKMODE x1 when CLKIN is stable and applies to CLKMODE x4 when CLKIN and PLL are stable.
‡ This parameter only applies to CLKMODE x4. The $\overline{RESET}$ signal is not connected internally to the clock PLL circuit. The PLL, however, may need up to 250 µs to stabilize following device powerup or after PLL configuration has been changed. During that time, $\overline{RESET}$ must be asserted to ensure proper device operation. See the *clock PLL* section for PLL lock times.

switching characteristics during reset§¶ (see Figure 27)

NO.	PARAMETER		C6701-120 C6701-150 C6701-167 MIN	C6701-120 C6701-150 C6701-167 MAX	UNIT
2	$t_{R(RESET)}$	Response time to change of value in $\overline{RESET}$ signal	1		CLKOUT1 cycles
3	$t_{d(CKO1H-CKO2IV)}$	Delay time, CLKOUT1 high to CLKOUT2 invalid	−1		ns
4	$t_{d(CKO1H-CKO2V)}$	Delay time, CLKOUT1 high to CLKOUT2 valid		10	ns
5	$t_{d(CKO1H-SDCLKIV)}$	Delay time, CLKOUT1 high to SDCLK invalid	−1		ns
6	$t_{d(CKO1H-SDCLKV)}$	Delay time, CLKOUT1 high to SDCLK valid		10	ns
7	$t_{d(CKO1H-SSCKIV)}$	Delay time, CLKOUT1 high to SSCLK invalid	−1		ns
8	$t_{d(CKO1H-SSCKV)}$	Delay time, CLKOUT1 high to SSCLK valid		10	ns
9	$t_{d(CKO1H-LOWIV)}$	Delay time, CLKOUT1 high to low group invalid	−1		ns
10	$t_{d(CKO1H-LOWV)}$	Delay time, CLKOUT1 high to low group valid		10	ns
11	$t_{d(CKO1H-HIGHIV)}$	Delay time, CLKOUT1 high to high group invalid	−1		ns
12	$t_{d(CKO1H-HIGHV)}$	Delay time, CLKOUT1 high to high group valid		10	ns
13	$t_{d(CKO1H-ZHZ)}$	Delay time, CLKOUT1 high to Z group high impedance	−1		ns
14	$t_{d(CKO1H-ZV)}$	Delay time, CLKOUT1 high to Z group valid		10	ns

§ Low group consists of: $\overline{IACK}$, INUM[3:0], DMAC[3:0], PD, TOUT0, and TOUT1.
High group consists of: $\overline{HINT}$.
Z group consists of: EA[21:2], ED[31:0], $\overline{CE}$[3:0], $\overline{BE}$[3:0], $\overline{ARE}$, $\overline{AWE}$, $\overline{AOE}$, $\overline{SSADS}$, $\overline{SSOE}$, $\overline{SSWE}$, SDA10, $\overline{SDRAS}$, $\overline{SDCAS}$, $\overline{SDWE}$, HD[15:0], CLKX0, CLKX1, FSX0, FSX1, DX0, DX1, CLKR0, CLKR1, FSR0, and FSR1.

¶ $\overline{HRDY}$ is gated by input $\overline{HCS}$.
If $\overline{HCS}$ = 0 at device reset, $\overline{HRDY}$ belongs to the high group.
If $\overline{HCS}$ = 1 at device reset, $\overline{HRDY}$ belongs to the low group.

RESET TIMING (CONTINUED)

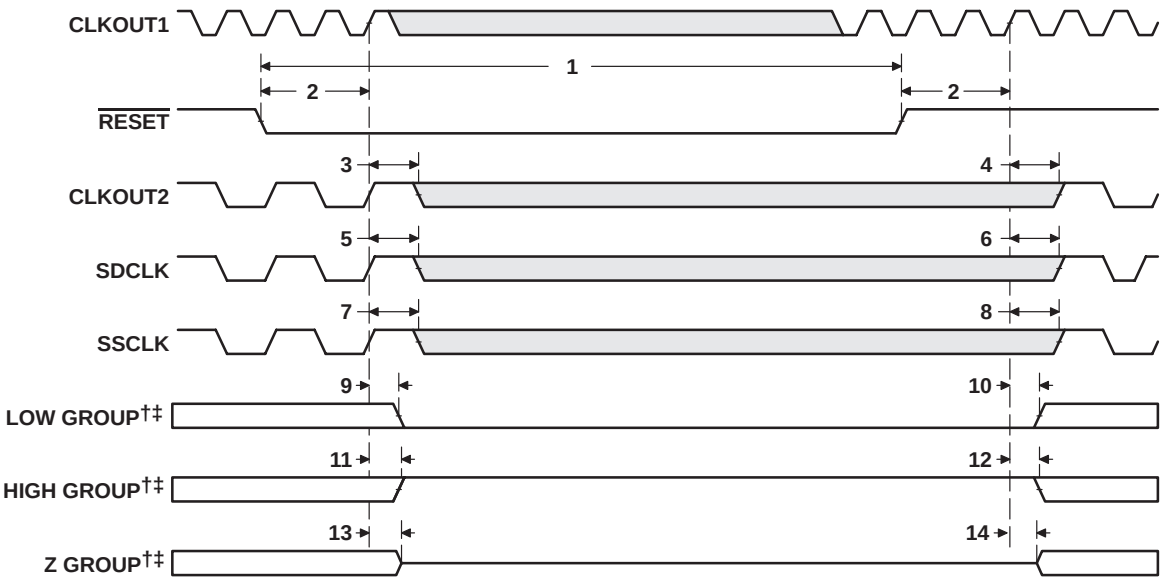

† Low group consists of: IACK, INUM[3:0], DMAC[3:0], PD, TOUT0, and TOUT1.
High group consists of: HINT.
Z group consists of: EA[21:2], ED[31:0], CE[3:0], BE[3:0], ARE, AWE, AOE, SSADS, SSOE, SSWE, SDA10, SDRAS, SDCAS, SDWE, HD[15:0], CLKX0, CLKX1, FSX0, FSX1, DX0, DX1, CLKR0, CLKR1, FSR0, and FSR1.

‡ HRDY is gated by input HCS.
If HCS = 0 at device reset, HRDY belongs to the high group.
If HCS = 1 at device reset, HRDY belongs to the low group.

Figure 27. Reset Timing

EXTERNAL INTERRUPT TIMING

timing requirements for interrupt response cycles†‡ (see Figure 28)

NO.			C6701-120 C6701-150 C6701-167		UNIT
			MIN	MAX	
2	$t_{w(ILOW)}$	Width of the interrupt pulse low	2P		ns
3	$t_{w(IHIGH)}$	Width of the interrupt pulse high	2P		ns

† Interrupt signals are synchronized internally and are potentially recognized one cycle later if setup and hold times are violated. Thus, they can be connected to asynchronous inputs.
‡ P = 1/CPU clock frequency in ns. For example, when running parts at 167 MHz, use P = 6 ns.

switching characteristics during interrupt response cycles§ (see Figure 28)

NO.	PARAMETER		C6701-120 C6701-150 C6701-167		UNIT
			MIN	MAX	
1	$t_{R(EINTH-IACKH)}$	Response time, EXT_INTx high to IACK high	9P		ns
4	$t_{d(CKO2L-IACKV)}$	Delay time, CLKOUT2 low to IACK valid	−0.5P	13 − 0.5P	ns
5	$t_{d(CKO2L-INUMV)}$	Delay time, CLKOUT2 low to INUMx valid		10 − 0.5P	ns
6	$t_{d(CKO2L-INUMIV)}$	Delay time, CLKOUT2 low to INUMx invalid	−0.5P		ns

§ P = 1/CPU clock frequency in ns. For example, when running parts at 167 MHz, use P = 6 ns.
When the PLL is used (CLKMODE x4), 0.5P = 1/(2 × CPU clock frequency).
For CLKMODE x1: 0.5P = PH, where PH is the high period of CLKIN.

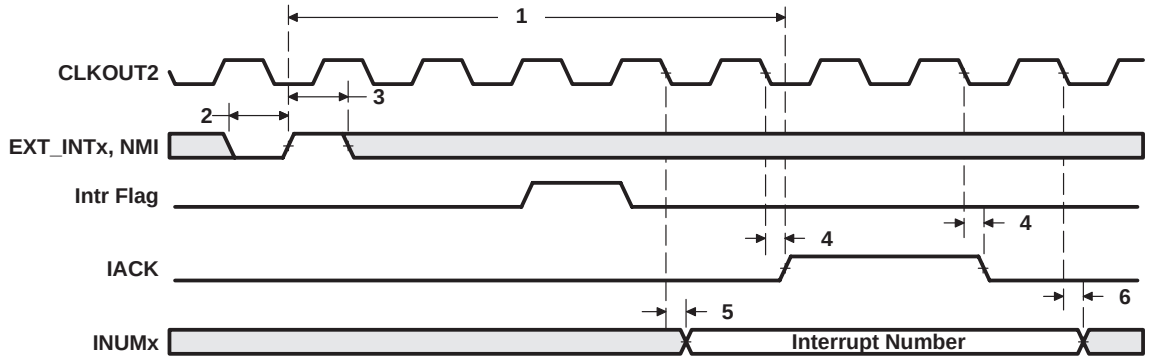

Figure 28. Interrupt Timing

HOST-PORT INTERFACE TIMING

timing requirements for host-port interface cycles†‡ (see Figure 29, Figure 30, Figure 31, and Figure 32)

NO.			C6701-120 C6701-150 C6701-167		UNIT
			MIN	MAX	
1	$t_{su(SEL-HSTBL)}$	Setup time, select signals§ valid before $\overline{HSTROBE}$ low	4		ns
2	$t_{h(HSTBL-SEL)}$	Hold time, select signals§ valid after $\overline{HSTROBE}$ low	2		ns
3	$t_{w(HSTBL)}$	Pulse duration, $\overline{HSTROBE}$ low	2P		ns
4	$t_{w(HSTBH)}$	Pulse duration, $\overline{HSTROBE}$ high between consecutive accesses	2P		ns
10	$t_{su(SEL-HASL)}$	Setup time, select signals§ valid before $\overline{HAS}$ low	4		ns
11	$t_{h(HASL-SEL)}$	Hold time, select signals§ valid after $\overline{HAS}$ low	2		ns
12	$t_{su(HDV-HSTBH)}$	Setup time, host data valid before $\overline{HSTROBE}$ high	3		ns
13	$t_{h(HSTBH-HDV)}$	Hold time, host data valid after $\overline{HSTROBE}$ high	2		ns
14	$t_{h(HRDYL-HSTBL)}$	Hold time, $\overline{HSTROBE}$ low after $\overline{HRDY}$ low. $\overline{HSTROBE}$ should not be inactivated until $\overline{HRDY}$ is active (low); otherwise, HPI writes will not complete properly.	1		ns
18	$t_{su(HASL-HSTBL)}$	Setup time, $\overline{HAS}$ low before $\overline{HSTROBE}$ low	2		ns
19	$t_{h(HSTBL-HASL)}$	Hold time, $\overline{HAS}$ low after $\overline{HSTROBE}$ low	2		ns

† $\overline{HSTROBE}$ refers to the following logical operation on $\overline{HCS}$, $\overline{HDS1}$, and $\overline{HDS2}$: [NOT($\overline{HDS1}$ XOR $\overline{HDS2}$)] OR $\overline{HCS}$.
‡ P = 1/CPU clock frequency in ns. For example, when running parts at 167 MHz, use P = 6 ns.
§ Select signals include: HCNTRL[1:0], HR/$\overline{W}$, and HHWIL.

switching characteristics during host-port interface cycles†‡ (see Figure 29, Figure 30, Figure 31, and Figure 32)

NO.	PARAMETER		C6701-120 C6701-150 C6701-167		UNIT
			MIN	MAX	
5	$t_{d(HCS-HRDY)}$	Delay time, $\overline{HCS}$ to $\overline{HRDY}$¶	1	12	ns
6	$t_{d(HSTBL-HRDYH)}$	Delay time, $\overline{HSTROBE}$ low to $\overline{HRDY}$ high#	1	12	ns
7	$t_{d(HSTBL-HDLZ)}$	Delay time, $\overline{HSTROBE}$ low to HD low impedance for an HPI read	4		ns
8	$t_{d(HDV-HRDYL)}$	Delay time, HD valid to $\overline{HRDY}$ low	P − 3	P + 3	ns
9	$t_{oh(HSTBH-HDV)}$	Output hold time, HD valid after $\overline{HSTROBE}$ high	3	12	ns
15	$t_{d(HSTBH-HDHZ)}$	Delay time, $\overline{HSTROBE}$ high to HD high impedance	3	12	ns
16	$t_{d(HSTBL-HDV)}$	Delay time, $\overline{HSTROBE}$ low to HD valid	3	12	ns
17	$t_{d(HSTBH-HRDYH)}$	Delay time, $\overline{HSTROBE}$ high to $\overline{HRDY}$ high‖	1	12	ns
20	$t_{d(HASL-HRDYH)}$	Delay time, $\overline{HAS}$ low to $\overline{HRDY}$ high	3	12	ns

† $\overline{HSTROBE}$ refers to the following logical operation on $\overline{HCS}$, $\overline{HDS1}$, and $\overline{HDS2}$: [NOT($\overline{HDS1}$ XOR $\overline{HDS2}$)] OR $\overline{HCS}$.
‡ P = 1/CPU clock frequency in ns. For example, when running parts at 167 MHz, use P = 6 ns.
¶ $\overline{HCS}$ enables $\overline{HRDY}$, and $\overline{HRDY}$ is always low when $\overline{HCS}$ is high. The case where $\overline{HRDY}$ goes high when $\overline{HCS}$ falls indicates that HPI is busy completing a previous HPID write or READ with autoincrement.
# This parameter is used during an HPID read. At the beginning of the first half-word transfer on the falling edge of $\overline{HSTROBE}$, the HPI sends the request to the DMA auxiliary channel, and $\overline{HRDY}$ remains high until the DMA auxiliary channel loads the requested data into HPID.
‖ This parameter is used after the second half-word of an HPID write or autoincrement read. $\overline{HRDY}$ remains low if the access is not an HPID write or autoincrement read. Reading or writing to HPIC or HPIA does not affect the $\overline{HRDY}$ signal.

HOST-PORT INTERFACE TIMING (CONTINUED)

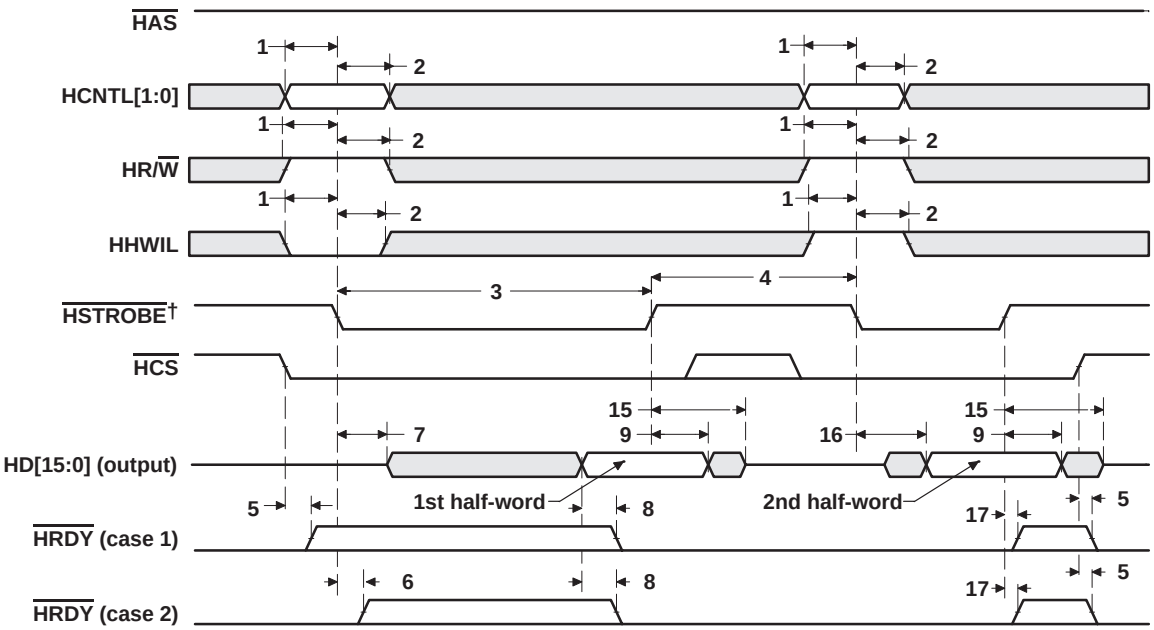

† $\overline{\text{HSTROBE}}$ refers to the following logical operation on $\overline{\text{HCS}}$, $\overline{\text{HDS1}}$, and $\overline{\text{HDS2}}$: [NOT($\overline{\text{HDS1}}$ XOR $\overline{\text{HDS2}}$)] OR $\overline{\text{HCS}}$.

Figure 29. HPI Read Timing ($\overline{\text{HAS}}$ Not Used, Tied High)

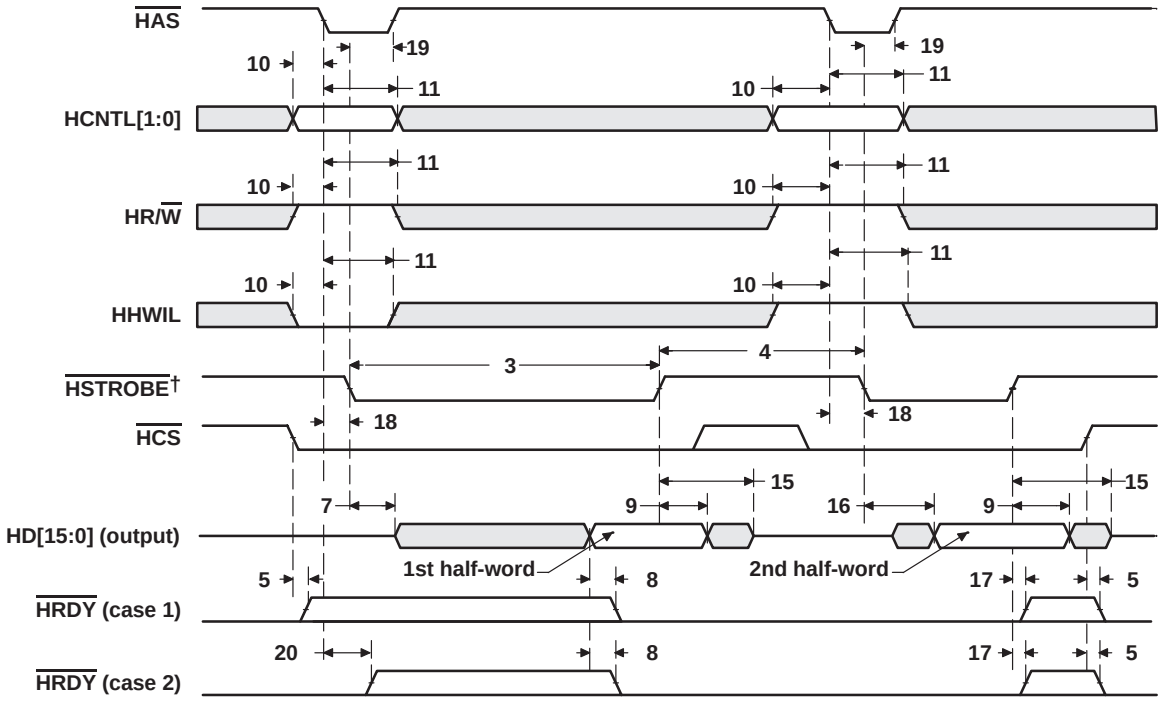

† $\overline{\text{HSTROBE}}$ refers to the following logical operation on $\overline{\text{HCS}}$, $\overline{\text{HDS1}}$, and $\overline{\text{HDS2}}$: [NOT($\overline{\text{HDS1}}$ XOR $\overline{\text{HDS2}}$)] OR $\overline{\text{HCS}}$.

Figure 30. HPI Read Timing ($\overline{\text{HAS}}$ Used)

HOST-PORT INTERFACE TIMING (CONTINUED)

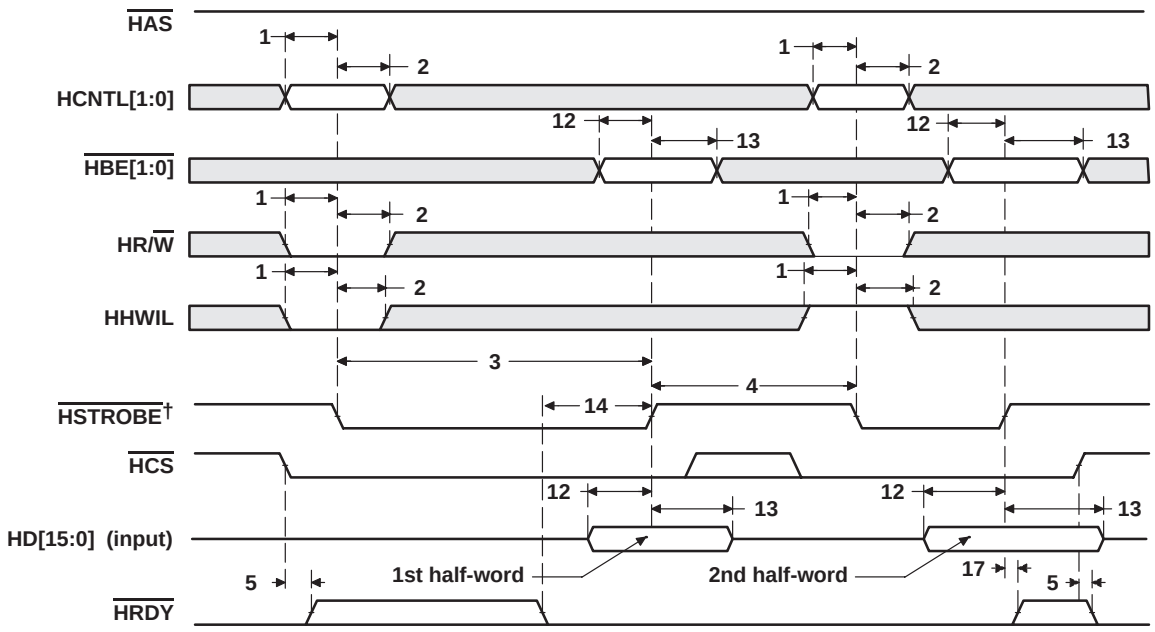

† HSTROBE refers to the following logical operation on HCS, HDS1, and HDS2: [NOT(HDS1 XOR HDS2)] OR HCS.

Figure 31. HPI Write Timing (HAS Not Used, Tied High)

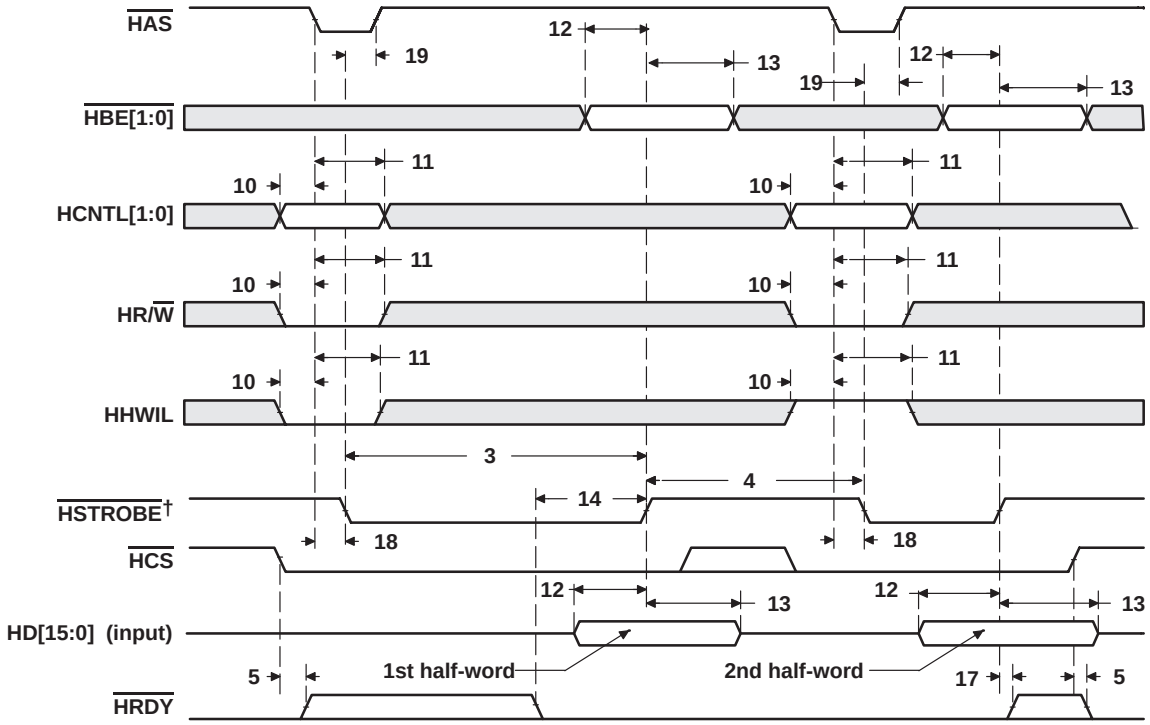

† HSTROBE refers to the following logical operation on HCS, HDS1, and HDS2: [NOT(HDS1 XOR HDS2)] OR HCS.

Figure 32. HPI Write Timing (HAS Used)

MULTICHANNEL BUFFERED SERIAL PORT TIMING

timing requirements for McBSP†‡ (see Figure 33)

NO.				C6701-120 C6701-150 C6701-167 MIN	MAX	UNIT
2	$t_{c(CKRX)}$	Cycle time, CLKR/X	CLKR/X ext	2P§		ns
3	$t_{w(CKRX)}$	Pulse duration, CLKR/X high or CLKR/X low	CLKR/X ext	P − 1¶		ns
5	$t_{su(FRH-CKRL)}$	Setup time, external FSR high before CLKR low	CLKR int	13		ns
			CLKR ext	4		
6	$t_{h(CKRL-FRH)}$	Hold time, external FSR high after CLKR low	CLKR int	7		ns
			CLKR ext	4		
7	$t_{su(DRV-CKRL)}$	Setup time, DR valid before CLKR low	CLKR int	10		ns
			CLKR ext	1		
8	$t_{h(CKRL-DRV)}$	Hold time, DR valid after CLKR low	CLKR int	4		ns
			CLKR ext	4		
10	$t_{su(FXH-CKXL)}$	Setup time, external FSX high before CLKX low	CLKX int	13		ns
			CLKX ext	4		
11	$t_{h(CKXL-FXH)}$	Hold time, external FSX high after CLKX low	CLKX int	7		ns
			CLKX ext	3		

† P = 1/CPU clock frequency in ns. For example, when running parts at 167 MHz, use P = 6 ns.
‡ CLKRP = CLKXP = FSRP = FSXP = 0. If polarity of any of the signals is inverted, then the timing references of that signal are also inverted.
§ The maximum McBSP bit rate is 50 MHz; therefore, the minimum CLKR/X clock cycle is either twice the CPU cycle time (2P), or 20 ns (50 MHz), whichever value is larger. For example, when running parts at 167 MHz (P = 6 ns), use 20 ns as the minimum CLKR/X clock cycle (by setting the appropriate CLKGDV ratio or external clock source). When running parts at 80 MHz (P = 12.5 ns), use 2P = 25 ns (40 MHz) as the minimum CLKR/X clock cycle. The maximum McBSP bit rate applies when the serial port is a master of clock and frame syncs and the other device the McBSP communicates to is a slave.
¶ The minimum CLKR/X pulse duration is either (P − 1) or 9 ns, whichever is larger. For example, when running parts at 167 MHz (P = 6 ns), use 9 ns as the minimum CLKR/X pulse duration. When running parts at 80 MHz (P = 12.5 ns), use (P − 1) = 11.5 ns as the minimum CLKR/X pulse duration.

MULTICHANNEL BUFFERED SERIAL PORT TIMING (CONTINUED)

switching characteristics for McBSP†‡ (see Figure 33)

NO.	PARAMETER			C6701-120 C6701-150 C6701-167		UNIT
				MIN	MAX	
1	$t_{d(CKSH-CKRXH)}$	Delay time, CLKS high to CLKR/X high for internal CLKR/X generated from CLKS input		3	15	ns
2	$t_{c(CKRX)}$	Cycle time, CLKR/X	CLKR/X int	2P§¶		ns
3	$t_{w(CKRX)}$	Pulse duration, CLKR/X high or CLKR/X low	CLKR/X int	C − 1#	C + 1#	ns
4	$t_{d(CKRH-FRV)}$	Delay time, CLKR high to internal FSR valid	CLKR int	−4	4	ns
9	$t_{d(CKXH-FXV)}$	Delay time, CLKX high to internal FSX valid	CLKX int	−4	5	ns
			CLKX ext	3	16	
12	$t_{dis(CKXH-DXHZ)}$	Disable time, DX high impedance following last data bit from CLKX high	CLKX int	−3	2	ns
			CLKX ext	2	9	
13	$t_{d(CKXH-DXV)}$	Delay time, CLKX high to DX valid.	CLKX int	−2	4	ns
			CLKX ext	3	16	
14	$t_{d(FXH-DXV)}$	Delay time, FSX high to DX valid. ONLY applies when in data delay 0 (XDATDLY = 00b) mode.	FSX int	−2	4	ns
			FSX ext	2	10	

† CLKRP = CLKXP = FSRP = FSXP = 0. If polarity of any of the signals is inverted, then the timing references of that signal are also inverted.
‡ Minimum delay times also represent minimum output hold times.
§ P = 1/CPU clock frequency in ns. For example, when running parts at 167 MHz, use P = 6 ns.
¶ The maximum McBSP bit rate is 50 MHz; therefore, the minimum CLKR/X clock cycle is either twice the CPU cycle time (2P), or 20 ns (50 MHz), whichever value is larger. For example, when running parts at 167 MHz (P = 6 ns), use 20 ns as the minimum CLKR/X clock cycle (by setting the appropriate CLKGDV ratio or external clock source). When running parts at 80 MHz (P = 12.5 ns), use 2P = 25 ns (40 MHz) as the minimum CLKR/X clock cycle. The maximum McBSP bit rate applies when the serial port is a master of clock and frame syncs and the other device the McBSP communicates to is a slave.
# C = H or L
S = sample rate generator input clock = P if CLKSM = 1 (P = 1/CPU clock frequency)
= sample rate generator input clock = P_clks if CLKSM = 0 (P_clks = CLKS period)
H = CLKX high pulse width = (CLKGDV/2 + 1) * S if CLKGDV is even
= (CLKGDV + 1)/2 * S if CLKGDV is odd or zero
L = CLKX low pulse width = (CLKGDV/2) * S if CLKGDV is even
= (CLKGDV + 1)/2 * S if CLKGDV is odd or zero
CLKGDV should be set appropriately to ensure the McBSP bit rate does not exceed the 50 MHz limit.

MULTICHANNEL BUFFERED SERIAL PORT TIMING (CONTINUED)

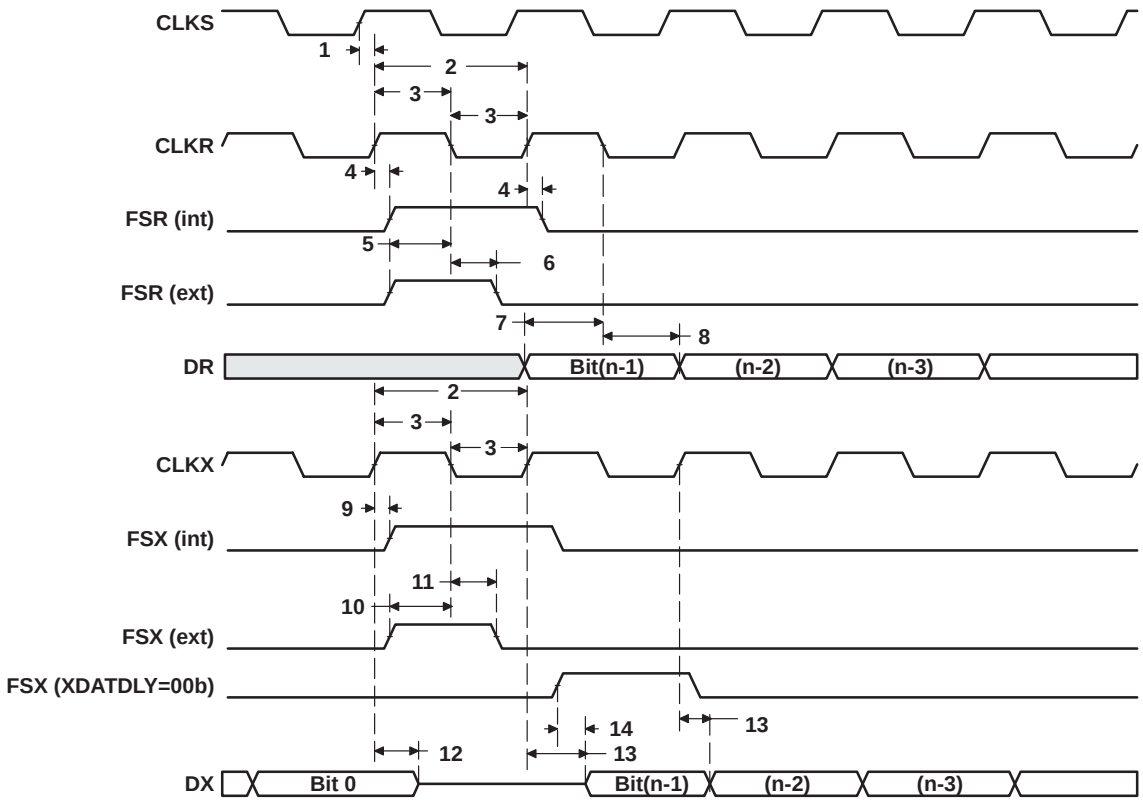

Figure 33. McBSP Timings

MULTICHANNEL BUFFERED SERIAL PORT TIMING (CONTINUED)

timing requirements for FSR when GSYNC = 1 (see Figure 34)

NO.			C6701-120 C6701-150 C6701-167		UNIT
			MIN	MAX	
1	$t_{su(FRH-CKSH)}$	Setup time, FSR high before CLKS high	4		ns
2	$t_{h(CKSH-FRH)}$	Hold time, FSR high after CLKS high	4		ns

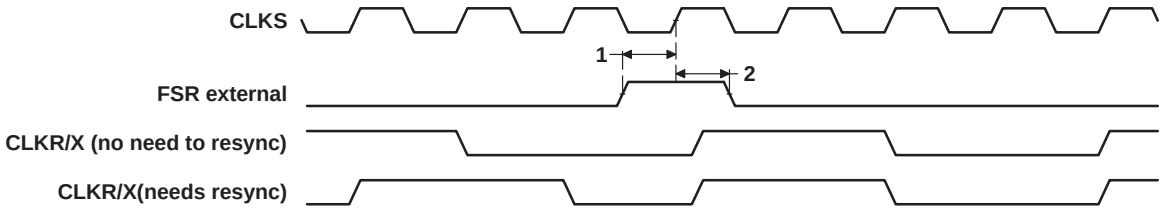

Figure 34. FSR Timing When GSYNC = 1

MULTICHANNEL BUFFERED SERIAL PORT TIMING (CONTINUED)

timing requirements for McBSP as SPI master or slave: CLKSTP = 10b, CLKXP = 0†‡ (see Figure 35)

NO.			C6701-120 C6701-150 C6701-167				UNIT
			MASTER		SLAVE		
			MIN	MAX	MIN	MAX	
4	$t_{su(DRV-CKXL)}$	Setup time, DR valid before CLKX low	12		2 − 3P		ns
5	$t_{h(CKXL-DRV)}$	Hold time, DR valid after CLKX low	4		5 + 6P		ns

† P = 1/CPU clock frequency in ns. For example, when running parts at 167 MHz, use P = 6 ns.
‡ For all SPI slave modes, CLKG is programmed as 1/2 of the CPU clock by setting CLKSM = CLKGDV = 1.

switching characteristics for McBSP as SPI master or slave: CLKSTP = 10b, CLKXP = 0†‡ (see Figure 35)

NO.	PARAMETER		C6701-120 C6701-150 C6701-167				UNIT
			MASTER§		SLAVE		
			MIN	MAX	MIN	MAX	
1	$t_{h(CKXL-FXL)}$	Hold time, FSX low after CLKX low¶	T − 4	T + 4			ns
2	$t_{d(FXL-CKXH)}$	Delay time, FSX low to CLKX high#	L − 4	L + 4			ns
3	$t_{d(CKXH-DXV)}$	Delay time, CLKX high to DX valid	−4	4	3P + 1	5P + 17	ns
6	$t_{dis(CKXL-DXHZ)}$	Disable time, DX high impedance following last data bit from CLKX low	L − 2	L + 3			ns
7	$t_{dis(FXH-DXHZ)}$	Disable time, DX high impedance following last data bit from FSX high			P + 4	3P + 17	ns
8	$t_{d(FXL-DXV)}$	Delay time, FSX low to DX valid			2P + 1	4P + 13	ns

† P = 1/CPU clock frequency in ns. For example, when running parts at 167 MHz, use P = 6 ns.
‡ For all SPI slave modes, CLKG is programmed as 1/2 of the CPU clock by setting CLKSM = CLKGDV = 1.
§ S = sample rate generator input clock = P if CLKSM = 1 (P = 1/CPU clock frequency)
= sample rate generator input clock = P_clks if CLKSM = 0 (P_clks = CLKS period)
T = CLKX period = (1 + CLKGDV) * S
H = CLKX high pulse width = (CLKGDV/2 + 1) * S if CLKGDV is even
= (CLKGDV + 1)/2 * S if CLKGDV is odd or zero
L = CLKX low pulse width = (CLKGDV/2) * S if CLKGDV is even
= (CLKGDV + 1)/2 * S if CLKGDV is odd or zero
¶ FSRP = FSXP = 1. As a SPI master, FSX is inverted to provide active-low slave-enable output. As a slave, the active-low signal input on FSX and FSR is inverted before being used internally.
CLKXM = FSXM = 1, CLKRM = FSRM = 0 for master McBSP
CLKXM = CLKRM = FSXM = FSRM = 0 for slave McBSP
# FSX should be low before the rising edge of clock to enable slave devices and then begin a SPI transfer at the rising edge of the master clock (CLKX).

MULTICHANNEL BUFFERED SERIAL PORT TIMING (CONTINUED)

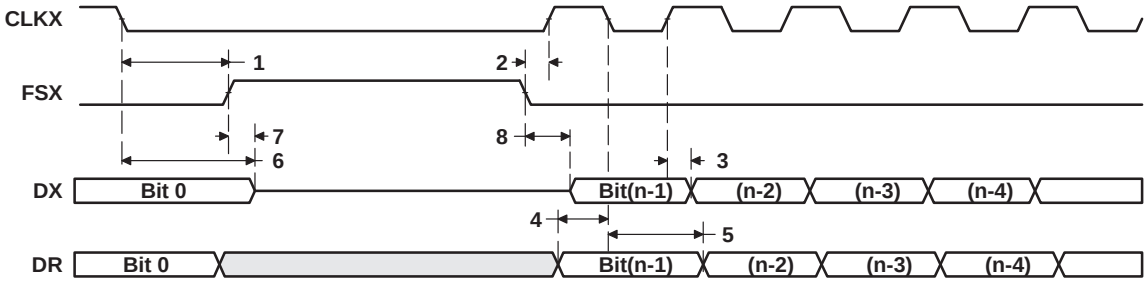

Figure 35. McBSP Timing as SPI Master or Slave: CLKSTP = 10b, CLKXP = 0

MULTICHANNEL BUFFERED SERIAL PORT TIMING (CONTINUED)

timing requirements for McBSP as SPI master or slave: CLKSTP = 11b, CLKXP = 0†‡ (see Figure 36)

NO.			C6701-120 C6701-150 C6701-167				UNIT
			MASTER		SLAVE		
			MIN	MAX	MIN	MAX	
4	$t_{su(DRV-CKXH)}$	Setup time, DR valid before CLKX high	12		2 − 3P		ns
5	$t_{h(CKXH-DRV)}$	Hold time, DR valid after CLKX high	4		5 + 6P		ns

† P = 1/CPU clock frequency in ns. For example, when running parts at 167 MHz, use P = 6 ns.
‡ For all SPI slave modes, CLKG is programmed as 1/2 of the CPU clock by setting CLKSM = CLKGDV = 1.

switching characteristics for McBSP as SPI master or slave: CLKSTP = 11b, CLKXP = 0†‡ (see Figure 36)

NO.	PARAMETER		C6701-120 C6701-150 C6701-167				UNIT
			MASTER§		SLAVE		
			MIN	MAX	MIN	MAX	
1	$t_{h(CKXL-FXL)}$	Hold time, FSX low after CLKX low¶	L − 4	L + 4			ns
2	$t_{d(FXL-CKXH)}$	Delay time, FSX low to CLKX high#	T − 4	T + 4			ns
3	$t_{d(CKXL-DXV)}$	Delay time, CLKX low to DX valid	−4	4	3P + 1	5P + 17	ns
6	$t_{dis(CKXL-DXHZ)}$	Disable time, DX high impedance following last data bit from CLKX low	−2	4	3P + 4	5P + 17	ns
7	$t_{d(FXL-DXV)}$	Delay time, FSX low to DX valid	H − 2	H + 3	2P + 1	4P + 13	ns

† P = 1/CPU clock frequency in ns. For example, when running parts at 167 MHz, use P = 6 ns.
‡ For all SPI slave modes, CLKG is programmed as 1/2 of the CPU clock by setting CLKSM = CLKGDV = 1.
§ S = sample rate generator input clock = P if CLKSM = 1 (P = 1/CPU clock frequency)
= sample rate generator input clock = P_clks if CLKSM = 0 (P_clks = CLKS period)
T = CLKX period = (1 + CLKGDV) * S
H = CLKX high pulse width = (CLKGDV/2 + 1) * S if CLKGDV is even
= (CLKGDV + 1)/2 * S if CLKGDV is odd or zero
L = CLKX low pulse width = (CLKGDV/2) * S if CLKGDV is even
= (CLKGDV + 1)/2 * S if CLKGDV is odd or zero
¶ FSRP = FSXP = 1. As a SPI master, FSX is inverted to provide active-low slave-enable output. As a slave, the active-low signal input on FSX and FSR is inverted before being used internally.
CLKXM = FSXM = 1, CLKRM = FSRM = 0 for master McBSP
CLKXM = CLKRM = FSXM = FSRM = 0 for slave McBSP
# FSX should be low before the rising edge of clock to enable slave devices and then begin a SPI transfer at the rising edge of the master clock (CLKX).

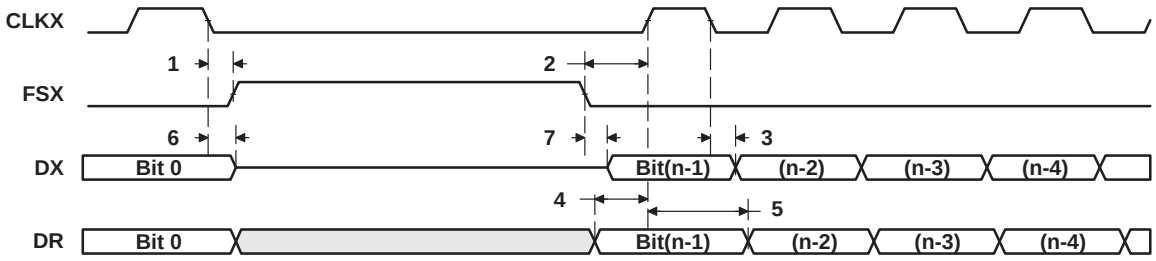

Figure 36. McBSP Timing as SPI Master or Slave: CLKSTP = 11b, CLKXP = 0

MULTICHANNEL BUFFERED SERIAL PORT TIMING (CONTINUED)

timing requirements for McBSP as SPI master or slave: CLKSTP = 10b, CLKXP = 1†‡ (see Figure 37)

NO.			C6701-120 C6701-150 C6701-167				UNIT
			MASTER		SLAVE		
			MIN	MAX	MIN	MAX	
4	$t_{su(DRV-CKXH)}$	Setup time, DR valid before CLKX high	12		2 − 3P		ns
5	$t_{h(CKXH-DRV)}$	Hold time, DR valid after CLKX high	4		5 + 6P		ns

† P = 1/CPU clock frequency in ns. For example, when running parts at 167 MHz, use P = 6 ns.
‡ For all SPI slave modes, CLKG is programmed as 1/2 of the CPU clock by setting CLKSM = CLKGDV = 1.

switching characteristics for McBSP as SPI master or slave: CLKSTP = 10b, CLKXP = 1†‡ (see Figure 37)

NO.	PARAMETER		C6701-120 C6701-150 C6701-167				UNIT
			MASTER§		SLAVE		
			MIN	MAX	MIN	MAX	
1	$t_{h(CKXH-FXL)}$	Hold time, FSX low after CLKX high¶	T − 4	T + 4			ns
2	$t_{d(FXL-CKXL)}$	Delay time, FSX low to CLKX low#	H − 4	H + 4			ns
3	$t_{d(CKXL-DXV)}$	Delay time, CLKX low to DX valid	−4	4	3P + 1	5P + 17	ns
6	$t_{dis(CKXH-DXHZ)}$	Disable time, DX high impedance following last data bit from CLKX high	H − 2	H + 3			ns
7	$t_{dis(FXH-DXHZ)}$	Disable time, DX high impedance following last data bit from FSX high			P + 4	3P + 17	ns
8	$t_{d(FXL-DXV)}$	Delay time, FSX low to DX valid			2P + 1	4P + 13	ns

† P = 1/CPU clock frequency in ns. For example, when running parts at 167 MHz, use P = 6 ns.
‡ For all SPI slave modes, CLKG is programmed as 1/2 of the CPU clock by setting CLKSM = CLKGDV = 1.
§ S = sample rate generator input clock = P if CLKSM = 1 (P = 1/CPU clock frequency)
= sample rate generator input clock = P_clks if CLKSM = 0 (P_clks = CLKS period)
T = CLKX period = (1 + CLKGDV) * S
H = CLKX high pulse width = (CLKGDV/2 + 1) * S if CLKGDV is even
= (CLKGDV + 1)/2 * S if CLKGDV is odd or zero
L = CLKX low pulse width = (CLKGDV/2) * S if CLKGDV is even
= (CLKGDV + 1)/2 * S if CLKGDV is odd or zero
¶ FSRP = FSXP = 1. As a SPI master, FSX is inverted to provide active-low slave-enable output. As a slave, the active-low signal input on FSX and FSR is inverted before being used internally.
CLKXM = FSXM = 1, CLKRM = FSRM = 0 for master McBSP
CLKXM = CLKRM = FSXM = FSRM = 0 for slave McBSP
# FSX should be low before the rising edge of clock to enable slave devices and then begin a SPI transfer at the rising edge of the master clock (CLKX).

MULTICHANNEL BUFFERED SERIAL PORT TIMING (CONTINUED)

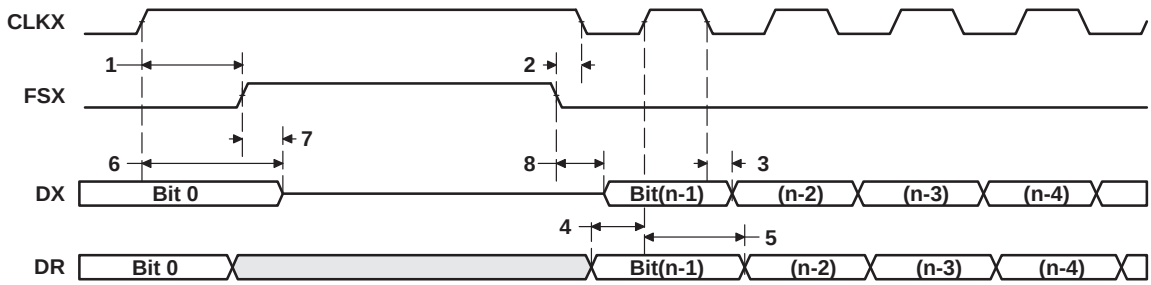

Figure 37. McBSP Timing as SPI Master or Slave: CLKSTP = 10b, CLKXP = 1

MULTICHANNEL BUFFERED SERIAL PORT TIMING (CONTINUED)

timing requirements for McBSP as SPI master or slave: CLKSTP = 11b, CLKXP = 1†‡ (see Figure 38)

NO.			C6701-120 C6701-150 C6701-167				UNIT
			MASTER		SLAVE		
			MIN	MAX	MIN	MAX	
4	$t_{su(DRV-CKXL)}$	Setup time, DR valid before CLKX low	12		2 − 3P		ns
5	$t_{h(CKXL-DRV)}$	Hold time, DR valid after CLKX low	4		5 + 6P		ns

† P = 1/CPU clock frequency in ns. For example, when running parts at 167 MHz, use P = 6 ns.
‡ For all SPI slave modes, CLKG is programmed as 1/2 of the CPU clock by setting CLKSM = CLKGDV = 1.

switching characteristics for McBSP as SPI master or slave: CLKSTP = 11b, CLKXP = 1†‡ (see Figure 38)

NO.	PARAMETER		C6701-120 C6701-150 C6701-167				UNIT
			MASTER§		SLAVE		
			MIN	MAX	MIN	MAX	
1	$t_{h(CKXH-FXL)}$	Hold time, FSX low after CLKX high¶	H − 4	H + 4			ns
2	$t_{d(FXL-CKXL)}$	Delay time, FSX low to CLKX low#	T − 4	T + 4			ns
3	$t_{d(CKXH-DXV)}$	Delay time, CLKX high to DX valid	−4	4	3P + 1	5P + 17	ns
6	$t_{dis(CKXH-DXHZ)}$	Disable time, DX high impedance following last data bit from CLKX high	−2	4	3P + 4	5P + 17	ns
7	$t_{d(FXL-DXV)}$	Delay time, FSX low to DX valid	L − 2	L + 3	2P + 1	4P + 13	ns

† P = 1/CPU clock frequency in ns. For example, when running parts at 167 MHz, use P = 6 ns.
‡ For all SPI slave modes, CLKG is programmed as 1/2 of the CPU clock by setting CLKSM = CLKGDV = 1.
§ S = sample rate generator input clock = P if CLKSM = 1 (P = 1/CPU clock frequency)
= sample rate generator input clock = P_clks if CLKSM = 0 (P_clks = CLKS period)
T = CLKX period = (1 + CLKGDV) * S
H = CLKX high pulse width = (CLKGDV/2 + 1) * S if CLKGDV is even
= (CLKGDV + 1)/2 * S if CLKGDV is odd or zero
L = CLKX low pulse width = (CLKGDV/2) * S if CLKGDV is even
= (CLKGDV + 1)/2 * S if CLKGDV is odd or zero
¶ FSRP = FSXP = 1. As a SPI master, FSX is inverted to provide active-low slave-enable output. As a slave, the active-low signal input on FSX and FSR is inverted before being used internally.
CLKXM = FSXM = 1, CLKRM = FSRM = 0 for master McBSP
CLKXM = CLKRM = FSXM = FSRM = 0 for slave McBSP
# FSX should be low before the rising edge of clock to enable slave devices and then begin a SPI transfer at the rising edge of the master clock (CLKX).

MULTICHANNEL BUFFERED SERIAL PORT TIMING (CONTINUED)

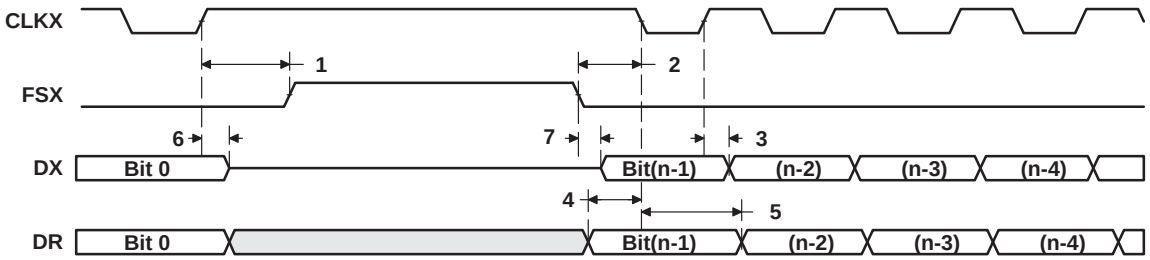

Figure 38. McBSP Timing as SPI Master or Slave: CLKSTP = 11b, CLKXP = 1

DMAC, TIMER, POWER-DOWN TIMING

switching characteristics for DMAC outputs (see Figure 39)

NO.	PARAMETER		C6701-120 C6701-150 C6701-167		UNIT
			MIN	MAX	
1	$t_{d(CKO1H-DMACV)}$	Delay time, CLKOUT1 high to DMAC valid	2	11	ns

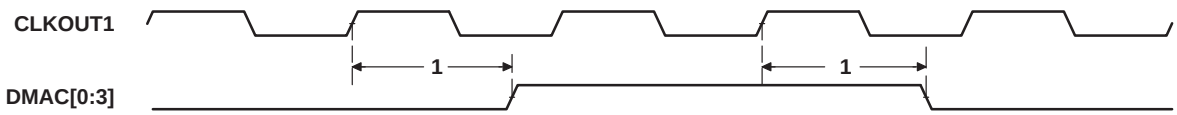

Figure 39. DMAC Timing

timing requirements for timer inputs (see Figure 40)†

NO.			C6701-120 C6701-150 C6701-167		UNIT
			MIN	MAX	
1	$t_{w(TINPH)}$	Pulse duration, TINP high	2P		ns

† P = 1/CPU clock frequency in ns. For example, when running parts at 167 MHz, use P = 6 ns.

switching characteristics for timer outputs (see Figure 40)

NO.	PARAMETER		C6701-120 C6701-150 C6701-167		UNIT
			MIN	MAX	
2	$t_{d(CKO1H-TOUTV)}$	Delay time, CLKOUT1 high to TOUT valid	1	10	ns

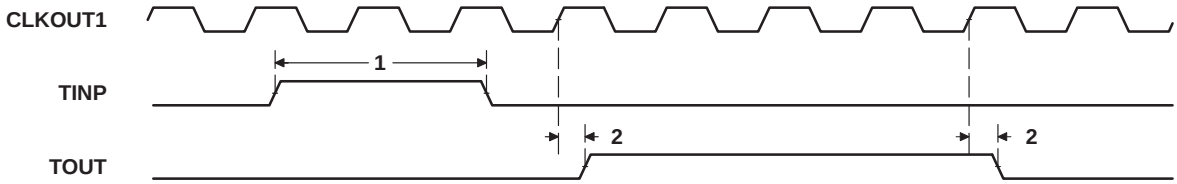

Figure 40. Timer Timing

DMAC, TIMER, POWER-DOWN TIMING (CONTINUED)

switching characteristics for power-down outputs (see Figure 41)

NO.	PARAMETER		C6701-120 C6701-150 C6701-167		UNIT
			MIN	MAX	
1	$t_{d(CKO1H-PDV)}$	Delay time, CLKOUT1 high to PD valid	1	9	ns

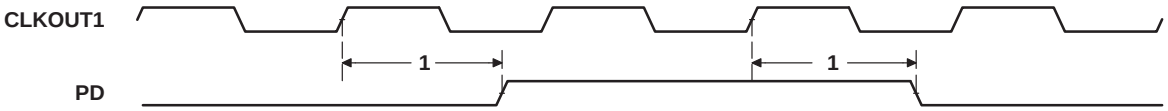

Figure 41. Power-Down Timing

JTAG TEST-PORT TIMING

timing requirements for JTAG test port (see Figure 42)

NO.			C6701-120 C6701-150 C6701-167		UNIT
			MIN	MAX	
1	$t_{c(TCK)}$	Cycle time, TCK	35		ns
3	$t_{su(TDIV-TCKH)}$	Setup time, TDI/TMS/$\overline{TRST}$ valid before TCK high	10		ns
4	$t_{h(TCKH-TDIV)}$	Hold time, TDI/TMS/$\overline{TRST}$ valid after TCK high	9		ns

switching characteristics for JTAG test port (see Figure 42)

NO.	PARAMETER		C6701-120 C6701-150 C6701-167		UNIT
			MIN	MAX	
2	$t_{d(TCKL-TDOV)}$	Delay time, TCK low to TDO valid	–3	12	ns

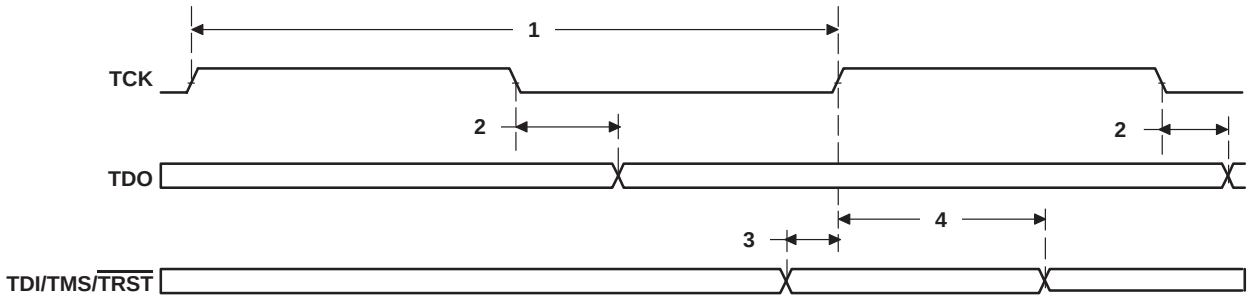

Figure 42. JTAG Test-Port Timing

MECHANICAL DATA

GJC (S-PBGA-N352) **PLASTIC BALL GRID ARRAY**

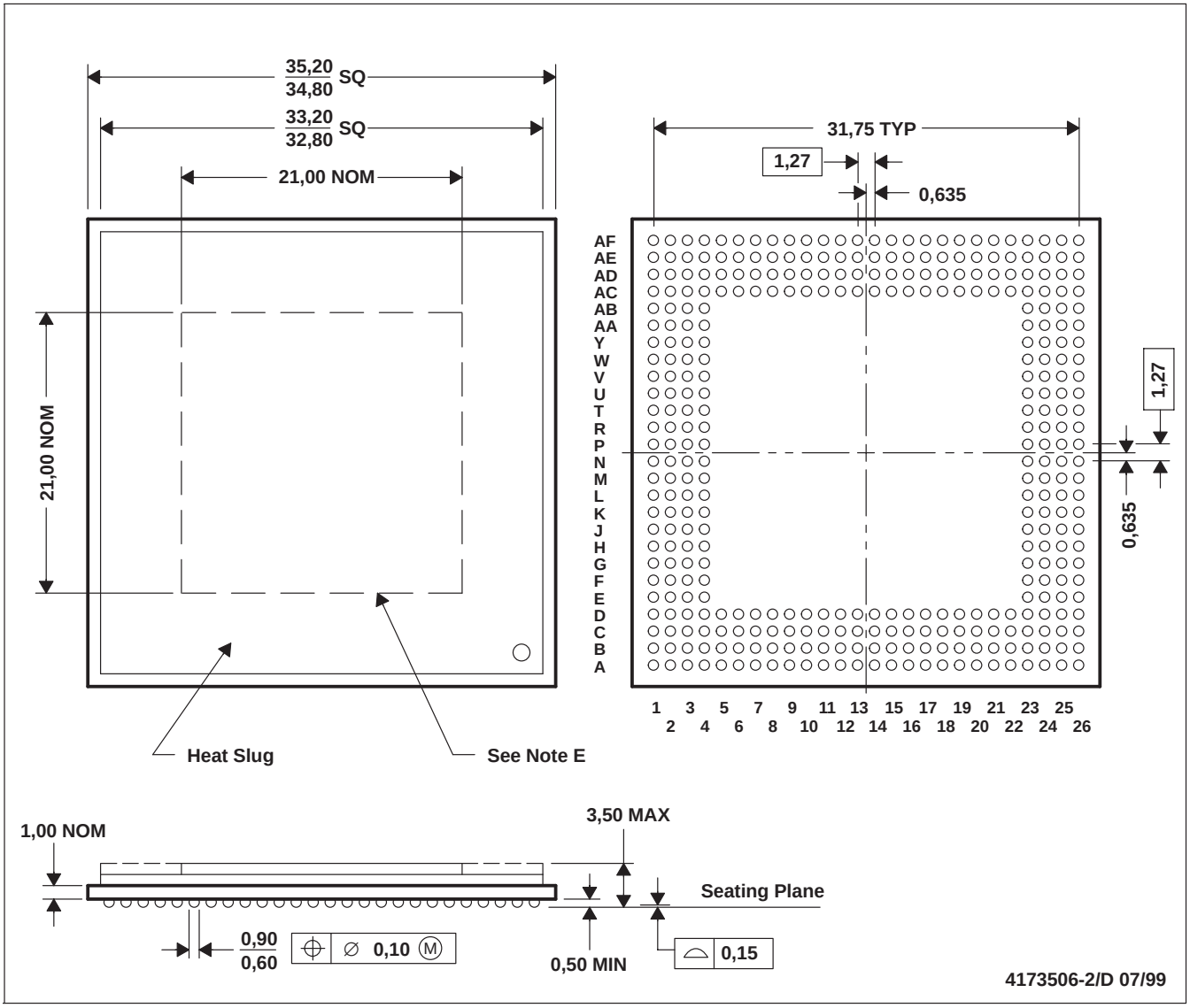

NOTES: A. All linear dimensions are in millimeters.
B. This drawing is subject to change without notice.
C. Thermally enhanced plastic package with heat slug (HSL).
D. Flip chip application only
E. Possible protrusion in this area, but within 3,50 max package height specification
F. Falls within JEDEC MO-151/BAR-2

thermal resistance characteristics (S-PBGA package)

NO		°C/W	Air Flow LFPM†
1	$R\Theta_{JC}$ Junction-to-case	0.74	N/A
2	$R\Theta_{JA}$ Junction-to-free air	11.31	0
3	$R\Theta_{JA}$ Junction-to-free air	9.60	100
4	$R\Theta_{JA}$ Junction-to-free air	8.34	250
5	$R\Theta_{JA}$ Junction-to-free air	7.30	500

† LFPM = Linear Feet Per Minute

REVISION HISTORY

This data sheet revision history highlights the technical changes made to the SPR067E device-specific data sheet to make it an SPRS067F revision.

Scope: Applicable updates to the C67x device family, specifically relating to the C6701 device, have been incorporated.

PAGE(S) NO.	ADDITIONS/CHANGES/DELETIONS
All	Updated the title for literature number SPRU190 to: TMS320C6000 DSP Peripherals Overview Reference Guide
26	Added the power-down mode logic section and accompanying information.

PACKAGING INFORMATION

Orderable part number	Status (1)	Material type (2)	Package | Pins	Package qty | Carrier	RoHS (3)	Lead finish/ Ball material (4)	MSL rating/ Peak reflow (5)	Op temp (°C)	Part marking (6)
TMS320C6701GJC150	Active	Production	FCBGA (GJC) | 352	24 | JEDEC TRAY (5+1)	No	SNPB	Level-4-220C-72 HR	0 to 90	TMS320C6701 @ 1998 TI 320C6701 GJC150
TMS320C6701GJC150.A	Active	Production	FCBGA (GJC) | 352	24 | JEDEC TRAY (5+1)	No	SNPB	Level-4-220C-72 HR	0 to 90	TMS320C6701 @ 1998 TI 320C6701 GJC150
TMS320C6701GJCA120	Obsolete	Production	FCBGA (GJC) | 352	-	-	Call TI	Call TI	-40 to 105	TMS320C6701GJC @ 1998 TI A120 320C6701
TMSC6701GJC16719V	Active	Production	FCBGA (GJC) | 352	24 | JEDEC TRAY (5+1)	No	SNPB	Level-4-220C-72 HR	0 to 90	TMS320C6701GJC @ 1998 TI 320C6701
TMSC6701GJC16719V.A	Active	Production	FCBGA (GJC) | 352	24 | JEDEC TRAY (5+1)	No	SNPB	Level-4-220C-72 HR	0 to 90	TMS320C6701GJC @ 1998 TI 320C6701

(1) **Status:** For more details on status, see our product life cycle.

(2) **Material type:** When designated, preproduction parts are prototypes/experimental devices, and are not yet approved or released for full production. Testing and final process, including without limitation quality assurance, reliability performance testing, and/or process qualification, may not yet be complete, and this item is subject to further changes or possible discontinuation. If available for ordering, purchases will be subject to an additional waiver at checkout, and are intended for early internal evaluation purposes only. These items are sold without warranties of any kind.

(3) **RoHS values:** Yes, No, RoHS Exempt. See the TI RoHS Statement for additional information and value definition.

(4) **Lead finish/Ball material:** Parts may have multiple material finish options. Finish options are separated by a vertical ruled line. Lead finish/Ball material values may wrap to two lines if the finish value exceeds the maximum column width.

(5) **MSL rating/Peak reflow:** The moisture sensitivity level ratings and peak solder (reflow) temperatures. In the event that a part has multiple moisture sensitivity ratings, only the lowest level per JEDEC standards is shown. Refer to the shipping label for the actual reflow temperature that will be used to mount the part to the printed circuit board.

(6) **Part marking:** There may be an additional marking, which relates to the logo, the lot trace code information, or the environmental category of the part.

Multiple part markings will be inside parentheses. Only one part marking contained in parentheses and separated by a "~" will appear on a part. If a line is indented then it is a continuation of the previous line and the two combined represent the entire part marking for that device.

Important Information and Disclaimer: The information provided on this page represents TI's knowledge and belief as of the date that it is provided. TI bases its knowledge and belief on information provided by third parties, and makes no representation or warranty as to the accuracy of such information. Efforts are underway to better integrate information from third parties. TI has taken and continues to take reasonable steps to provide representative and accurate information but may not have conducted destructive testing or chemical analysis on incoming materials and chemicals. TI and TI suppliers consider certain information to be proprietary, and thus CAS numbers and other limited information may not be available for release.

In no event shall TI's liability arising out of such information exceed the total purchase price of the TI part(s) at issue in this document sold by TI to Customer on an annual basis.

OTHER QUALIFIED VERSIONS OF TMS320C6701 :

- Catalog : SM320C6701
- Enhanced Product : SM320C6701-EP
- Military : SMJ320C6701

NOTE: Qualified Version Definitions:

- Catalog - TI's standard catalog product
- Enhanced Product - Supports Defense, Aerospace and Medical Applications
- Military - QML certified for Military and Defense Applications

TRAY

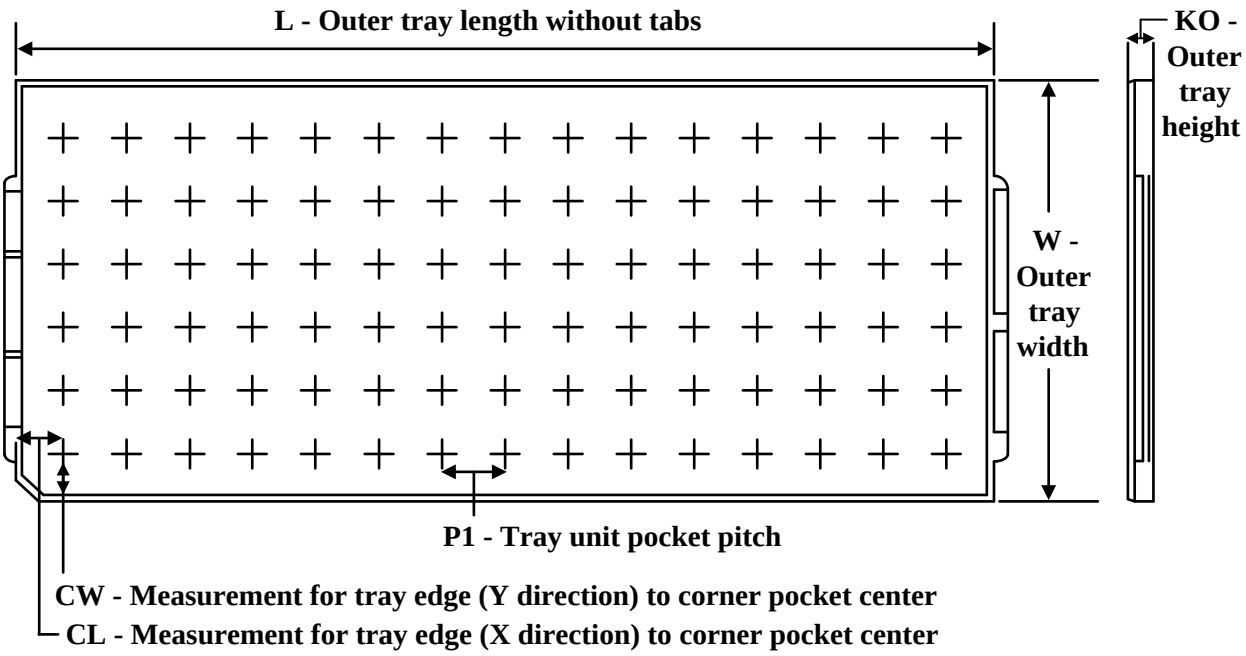

Chamfer on Tray corner indicates Pin 1 orientation of packed units.

*All dimensions are nominal

Device	Package Name	Package Type	Pins	SPQ	Unit array matrix	Max temperature (°C)	L (mm)	W (mm)	K0 (µm)	P1 (mm)	CL (mm)	CW (mm)
TMS320C6701GJC150	GJC	FCBGA	352	24	3 X 8	150	315	135.9	7620	38	24.5	29.95
TMS320C6701GJC150.A	GJC	FCBGA	352	24	3 X 8	150	315	135.9	7620	38	24.5	29.95
TMSC6701GJC16719V	GJC	FCBGA	352	24	3 X 8	150	315	135.9	7620	38	24.5	29.95
TMSC6701GJC16719V.A	GJC	FCBGA	352	24	3 X 8	150	315	135.9	7620	38	24.5	29.95

GJC (S-PBGA-N352) **PLASTIC BALL GRID ARRAY**

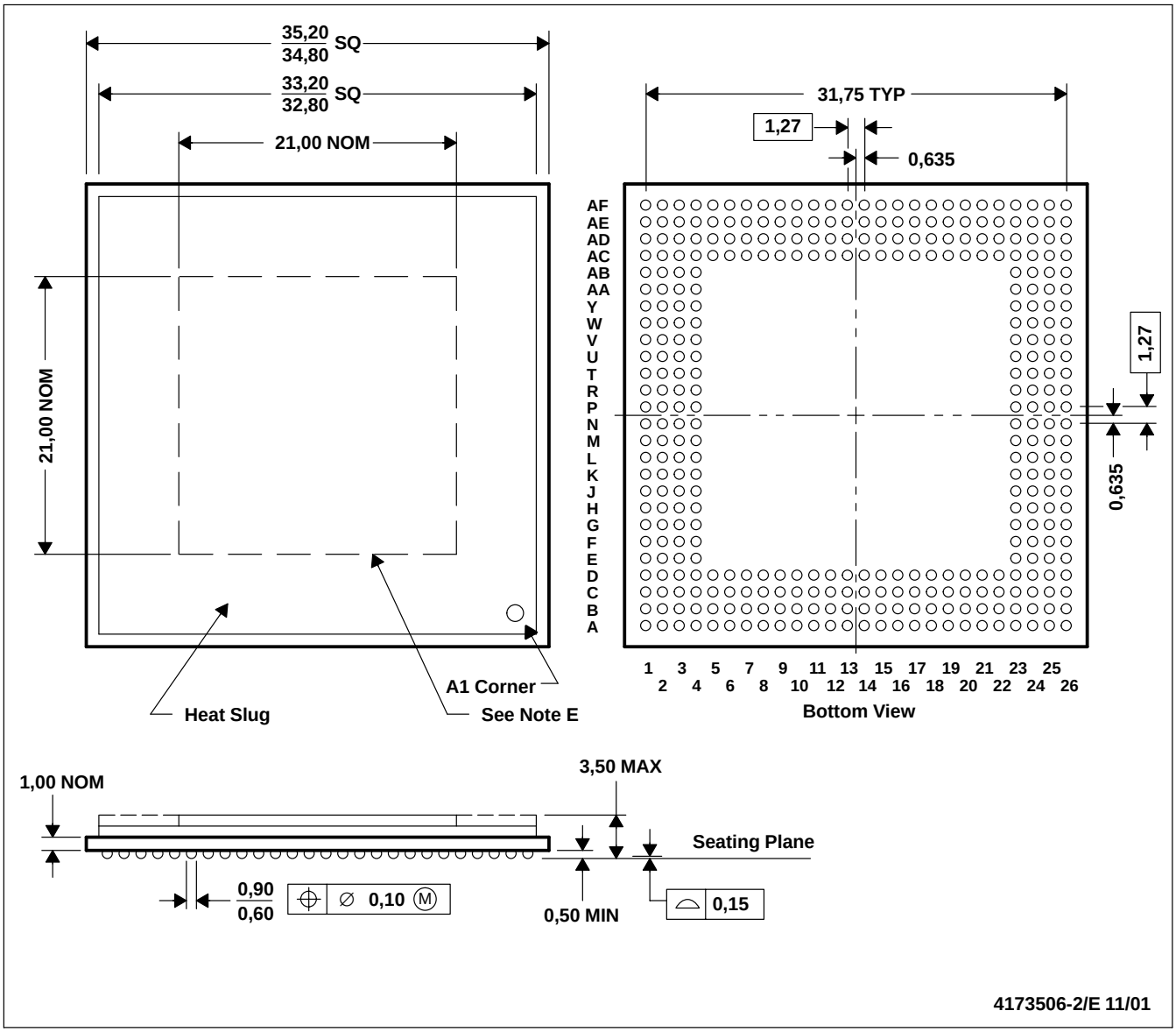

NOTES:
- A. All linear dimensions are in millimeters.
- B. This drawing is subject to change without notice.
- C. Thermally enhanced plastic package with heat slug (HSL).
- D. Flip chip application only
- E. Possible protrusion in this area, but within 3,50 max package height specification
- F. Falls within JEDEC MO-151/BAR-2

IMPORTANT NOTICE AND DISCLAIMER

TI PROVIDES TECHNICAL AND RELIABILITY DATA (INCLUDING DATA SHEETS), DESIGN RESOURCES (INCLUDING REFERENCE DESIGNS), APPLICATION OR OTHER DESIGN ADVICE, WEB TOOLS, SAFETY INFORMATION, AND OTHER RESOURCES “AS IS” AND WITH ALL FAULTS, AND DISCLAIMS ALL WARRANTIES, EXPRESS AND IMPLIED, INCLUDING WITHOUT LIMITATION ANY IMPLIED WARRANTIES OF MERCHANTABILITY, FITNESS FOR A PARTICULAR PURPOSE OR NON-INFRINGEMENT OF THIRD PARTY INTELLECTUAL PROPERTY RIGHTS.

These resources are intended for skilled developers designing with TI products. You are solely responsible for (1) selecting the appropriate TI products for your application, (2) designing, validating and testing your application, and (3) ensuring your application meets applicable standards, and any other safety, security, regulatory or other requirements.

These resources are subject to change without notice. TI grants you permission to use these resources only for development of an application that uses the TI products described in the resource. Other reproduction and display of these resources is prohibited. No license is granted to any other TI intellectual property right or to any third party intellectual property right. TI disclaims responsibility for, and you will fully indemnify TI and its representatives against, any claims, damages, costs, losses, and liabilities arising out of your use of these resources.

TI’s products are provided subject to TI’s Terms of Sale or other applicable terms available either on ti.com or provided in conjunction with such TI products. TI’s provision of these resources does not expand or otherwise alter TI’s applicable warranties or warranty disclaimers for TI products.

TI objects to and rejects any additional or different terms you may have proposed.

Mailing Address: Texas Instruments, Post Office Box 655303, Dallas, Texas 75265
Copyright © 2025, Texas Instruments Incorporated