LM22672/-Q1 42-V, 1-A SIMPLE SWITCHER® Step-Down Voltage Regulator with Features

1 Features

- Wide Input Voltage Range: 4.5 V to 42 V
- Internally Compensated Voltage Mode Control
- Stable with Low ESR Ceramic Capacitors
- 200 mΩ N-Channel MOSFET
- Output Voltage Options:
  -ADJ (Outputs as Low as 1.285 V)
  -5.0 (Output Fixed to 5 V)
- ±1.5% Feedback Reference Accuracy
- 500 kHz Default Switching Frequency
- Adjustable Switching Frequency and Synchronization
- –40°C to 125°C Junction Temperature Range
- Precision Enable Input
- Integrated Boot-Strap Diode
- Adjustable Soft-Start
- Fully WEBENCH® Enabled
- LM22672-Q1 is an Automotive Grade Product that is AEC-Q100 Grade 1 Qualified (–40°C to +125°C Junction Temperature)
- SO PowerPAD (Exposed Pad)

2 Applications

- Industrial Control
- Telecom and Datacom Systems
- Embedded Systems
- Conversions from Standard 24 V, 12 V and 5 V Input Rails

Simplified Application Schematic

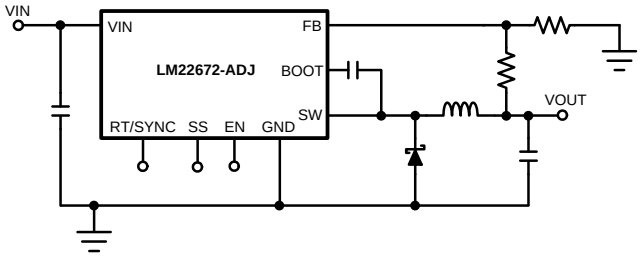

3 Description

The LM22672 switching regulator provides all of the functions necessary to implement an efficient high voltage step-down (buck) regulator using a minimum of external components. This easy to use regulator incorporates a 42 V N-channel MOSFET switch capable of providing up to 1 A of load current. Excellent line and load regulation along with high efficiency (> 90%) are featured. Voltage mode control offers short minimum on-time, allowing the widest ratio between input and output voltages. Internal loop compensation means that the user is free from the tedious task of calculating the loop compensation components. Fixed 5 V output and adjustable output voltage options are available.

The default switching frequency is set at 500 kHz allowing for small external components and good transient response. In addition, the frequency can be adjusted over a range of 200 kHz to 1 MHz with a single external resistor. The internal oscillator can be synchronized to a system clock or to the oscillator of another regulator. A precision enable input allows simplification of regulator control and system power sequencing. In shutdown mode the regulator draws only 25 µA (typ). An adjustable soft-start feature is provided through the selection of a single external capacitor. The LM22672 also has built in thermal shutdown, and current limiting to protect against accidental overloads.

The LM22672 is a member of Texas Instruments' SIMPLE SWITCHER® family. The SIMPLE SWITCHER® concept provides for an easy to use complete design using a minimum number of external components and the TI WEBENCH® design tool. TI's WEBENCH® tool includes features such as external component calculation, electrical simulation, thermal simulation, and Build-It boards for easy design-in.

Device Information(1)

PART NUMBER	PACKAGE	BODY SIZE (NOM)
LM22672, LM22672-Q1	HSOP (8)	4.89 mm x 3.90 mm

(1) For all available packages, see the orderable addendum at the end of the data sheet.

An IMPORTANT NOTICE at the end of this data sheet addresses availability, warranty, changes, use in safety-critical applications, intellectual property matters and other important disclaimers. PRODUCTION DATA.

Table of Contents

1 Features ... 1
2 Applications ... 1
3 Description ... 1
4 Revision History ... 2
5 Pin Configuration and Functions ... 3
6 Specifications ... 4
6.1 Absolute Maximum Ratings ... 4
6.2 Handling Ratings: LM22672 ... 4
6.3 Handling Ratings: LM22672-Q1 ... 4
6.4 Recommended Operating Conditions ... 4
6.5 Thermal Information ... 4
6.6 Electrical Characteristics ... 5
6.7 Typical Characteristics ... 6
7 Detailed Description ... 8
7.1 Overview ... 8
7.2 Functional Block Diagram ... 8
7.3 Feature Description ... 9
7.4 Device Functional Mode ... 12
8 Application and Implementation ... 16
8.1 Application Information ... 16
8.2 Typical Application ... 17
9 Power Supply Recommendations ... 21
10 Layout ... 21
10.1 Layout Guidelines ... 21
10.2 Layout Example ... 22
10.3 Thermal Considerations ... 22
11 Device and Documentation Support ... 24
11.1 Documentation Support ... 24
11.2 Related Links ... 24
11.3 Trademarks ... 24
11.4 Electrostatic Discharge Caution ... 24
11.5 Glossary ... 24
12 Mechanical, Packaging, and Orderable Information ... 24

4 Revision History

Changes from Revision L (April 2013) to Revision M	Page
• Added *Pin Configuration and Functions* section, *Handling Rating* table, *Feature Description* section, *Device Functional Modes*, *Application and Implementation* section, *Power Supply Recommendations* section, *Layout* section, *Device and Documentation Support* section, and *Mechanical, Packaging, and Orderable Information* section	1

Changes from Revision K (April 2013) to Revision L	Page
• Changed from National to TI format	1

Copyright © 2008–2014, Texas Instruments Incorporated

5 Pin Configuration and Functions

8-Pin
HSOP Package
Top View

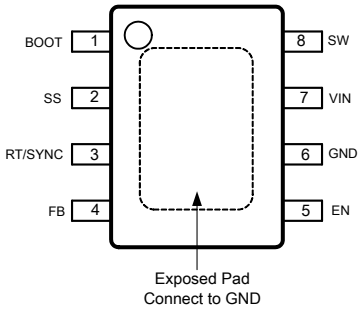

Pin Functions

PIN		TYPE	DESCRIPTION	APPLICATION INFORMATION
NAME	NO.			
BOOT	1	I	Bootstrap input	Provides the gate voltage for the high side NFET.
EN	5	I	Enable input	Used to control regulator start-up and shutdown. See *Precision Enable and UVLO* section of data sheet.
EP	EP	—	Exposed Pad	Connect to ground. Provides thermal connection to PCB. See *Thermal Considerations*.
FB	4	I	Feedback input	Feedback input to regulator.
GND	6	—	Ground input to regulator; system common	System ground pin.
RT/SYNC			Oscillator mode control input	Used to control oscillator mode of regulator. See *Switching Frequency Adjustment and Synchronization* section of data sheet.
SS	2	I	Soft-start input	Used to increase soft-start time. See *Soft-Start* section of data sheet.
SW	8	O	Switch output	Switching output of regulator.
VIN		I	Input voltage	Supply input to the regulator.

6 Specifications

6.1 Absolute Maximum Ratings[(1)(2)]

over operating free-air temperature range (unless otherwise noted)

	MIN	MAX	UNIT
VIN to GND		43	V
EN Pin Voltage	–0.5	6	V
SS, RT/SYNC Pin Voltage	–0.5	7	V
SW to GND[(3)]	–5	V_{IN}	V
BOOT Pin Voltage		V_{SW} + 7	V
FB Pin Voltage	–0.5	7	V
Power Dissipation	Internally Limited		
Junction Temperature		150	°C
For soldering specifications, refer to Application Report *Absolute Maximum Ratings for Soldering* (SNOA549).			

(1) *Absolute Maximum Ratings* indicate limits beyond which damage to the device may occur, including inoperability and degradation of device reliability and/or performance. Functional operation of the device and/or non-degradation at the Absolute Maximum Ratings or other conditions beyond those indicated in the *Recommended Operating Conditions* is not implied. *Recommended Operating Conditions* indicate conditions at which the device is functional and should not be operated beyond such conditions. For ensured specifications and conditions, see the *Electrical Characteristics* table.
(2) If Military/Aerospace specified devices are required, please contact the Texas Instruments Sales Office/Distributors for availability and specifications.
(3) The absolute maximum specification of the 'SW to GND' applies to dc voltage. An extended negative voltage limit of –10 V applies to a pulse of up to 50 ns.

6.2 Handling Ratings: LM22672

			MIN	MAX	UNIT
T_{stg}	Storage temperature range		–65	150	°C
$V_{(ESD)}$	Electrostatic discharge	Human body model (HBM), per ANSI/ESDA/JEDEC JS-001, all pins[(1)]	–2	2	kV

(1) JEDEC document JEP155 states that 500-V HBM allows safe manufacturing with a standard ESD control process.

6.3 Handling Ratings: LM22672-Q1

			MIN	MAX	UNIT
T_{stg}	Storage temperature range		–65	150	°C
$V_{(ESD)}$	Electrostatic discharge	Human body model (HBM), per AEC Q100-002[(1)]	–2	2	kV

(1) AEC Q100-002 indicates HBM stressing is done in accordance with the ANSI/ESDA/JEDEC JS-001 specification.

6.4 Recommended Operating Conditions

		MIN	MAX	UNIT
V_{IN}	Supply Voltage	4.5	42	V
	Junction Temperature Range	–40	125	°C

6.5 Thermal Information

THERMAL METRIC[(1)]			LM22672, LM22672-Q1 HSOP 8 PINS	UNIT
$R_{\theta JA}$	Junction-to-ambient thermal resistance	MR Package, Junction to ambient thermal resistance[(2)]	60	°C/W

(1) For more information about traditional and new thermal metrics, see the *IC Package Thermal Metrics* application report (SPRA953).
(2) The value of $R\theta_{JA}$ for the SO PowerPAD exposed pad (MR) package of 60°C/W is valid if package is mounted to 1 square inch of copper. The $R\theta_{JA}$ value can range from 42 to 115°C/W depending on the amount of PCB copper dedicated to heat transfer.

Copyright © 2008–2014, Texas Instruments Incorporated

6.6 Electrical Characteristics

Typical values represent the most likely parametric norm at $T_A = T_J = 25°C$, and are provided for reference purposes only. Unless otherwise specified: $V_{IN} = 12$ V.

PARAMETER		TEST CONDITIONS	MIN(1)	TYP(2)	MAX(1)	UNIT
LM22672-5.0						
V_{FB}	Feedback Voltage	V_{IN} = 8 V to 42 V	4.925	5.0	5.075	V
		V_{IN} = 8 V to 42 V, –40°C ≤ T_J ≤ 125°C	4.9		5.1	
LM22672-ADJ						
V_{FB}	Feedback Voltage	V_{IN} = 4.7 V to 42 V	1.266	1.285	1.304	V
		V_{IN} = 4.7 V to 42 V, –40°C ≤ T_J ≤ 125°C	1.259		1.311	
ALL OUTPUT VOLTAGE VERSIONS						
I_Q	Quiescent Current	V_{FB} = 5 V		3.4		mA
		V_{FB} = 5 V, –40°C ≤ T_J ≤ 125°C			6	
I_{STDBY}	Standby Quiescent Current	EN Pin = 0 V		25	40	µA
I_{CL}	Current Limit		1.3	1.5	1.7	A
		–40°C ≤ T_J ≤ 125°C	1.2		1.8	
I_L	Output Leakage Current	V_{IN} = 42 V, EN Pin = 0 V, V_{SW} = 0 V		0.2	2	µA
		V_{SW} = –1 V		0.1	3	µA
$R_{DS(ON)}$	Switch On-Resistance			0.2	0.24	Ω
		–40°C ≤ T_J ≤ 125°C			0.32	
F_{sw}	Oscillator Frequency			500		kHz
		–40°C ≤ T_J ≤ 125°C	400		600	
T_{OFF}	Minimum Off-time			200		ns
		–40°C ≤ T_J ≤ 125°C	100		300	
T_{ON}	Minimum On-time			100		ns
I_{BIAS}	Feedback Bias Current	V_{FB} = 1.3 V (ADJ Version Only)		230		nA
V_{EN}	Enable Threshold Voltage	Falling		1.6		V
		Falling, –40°C ≤ T_J ≤ 125°C	1.3		1.9	
V_{ENHYST}	Enable Voltage Hysteresis			0.6		V
I_{EN}	Enable Input Current	EN Input = 0 V		6		µA
F_{SYNC}	Maximum Synchronization Frequency	V_{SYNC} = 3.5 V, 50% duty-cycle		1		MHz
V_{SYNC}	Synchronization Threshold Voltage			1.75		V
I_{SS}	Soft-Start Current			50		µA
		–40°C ≤ T_J ≤ 125°C	30		70	
T_{SD}	Thermal Shutdown Threshold			150		°C

(1) MIN and MAX limits are 100% production tested at 25°C. Limits over the operating temperature range are ensured through correlation using Statistical Quality Control (SQC) methods. Limits are used to calculate Average Outgoing Quality Level (AOQL).
(2) Typical values represent most likely parametric norms at the conditions specified and are not ensured.

Copyright © 2008–2014, Texas Instruments Incorporated

6.7 Typical Characteristics

V_{in} = 12 V, T_J = 25°C (unless otherwise specified)

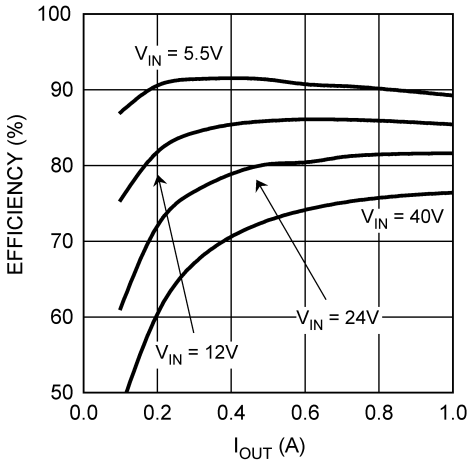

Figure 1. Efficiency vs I_{OUT} and V_{IN}, V_{OUT} = 3.3 V

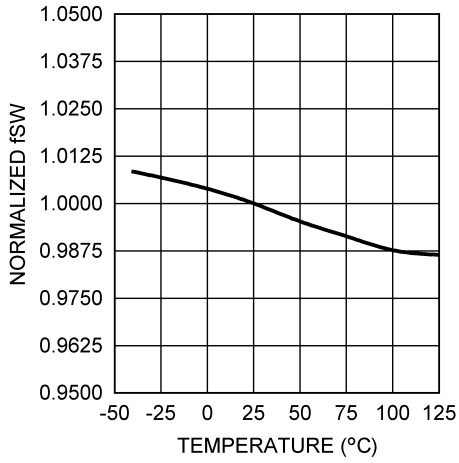

Figure 2. Normalized Switching Frequency vs Temperature

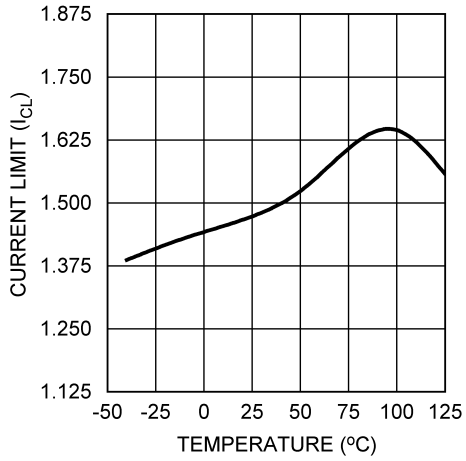

Figure 3. Current Limit vs Temperature

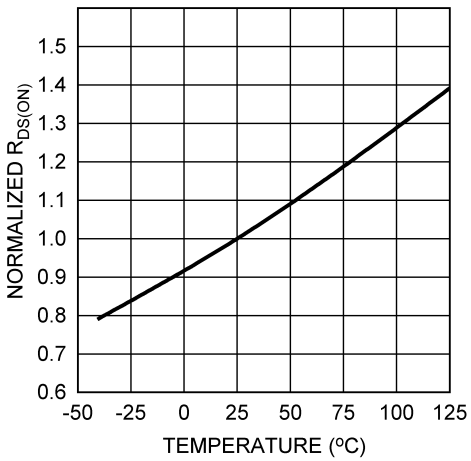

Figure 4. Normalized $R_{DS(ON)}$ vs Temperature

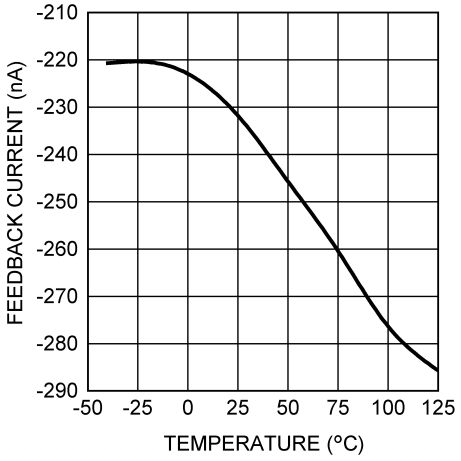

Figure 5. Feedback Bias Current vs Temperature

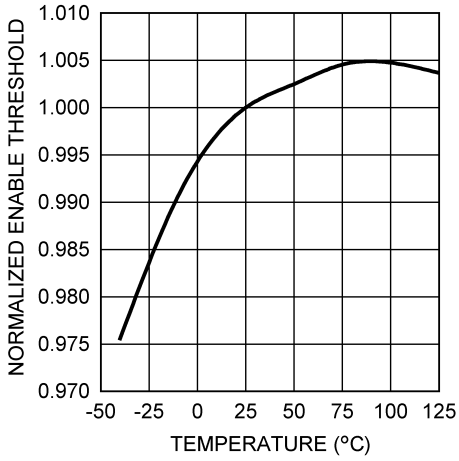

Figure 6. Normalized Enable Threshold Voltage vs Temperature

Copyright © 2008–2014, Texas Instruments Incorporated

Typical Characteristics (continued)

V_{in} = 12 V, T_J = 25°C (unless otherwise specified)

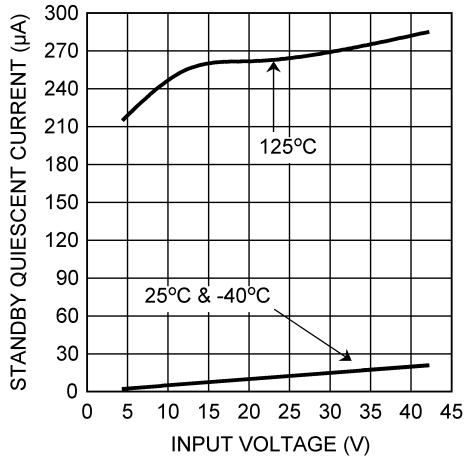

Figure 7. Standby Quiescent Current vs Input Voltage

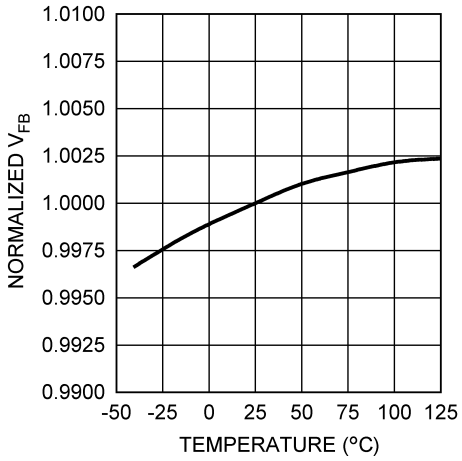

Figure 8. Normalized Feedback Voltage vs Temperature

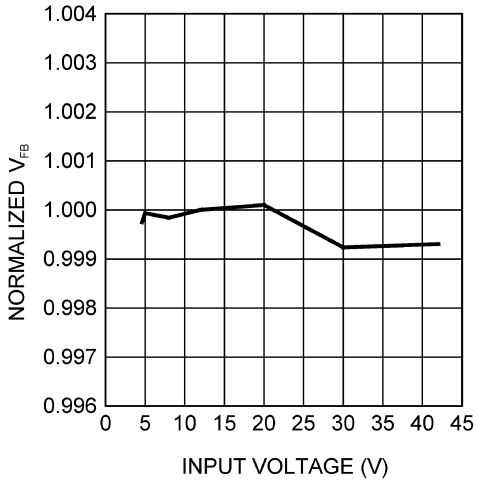

Figure 9. Normalized Feedback Voltage vs Input Voltage

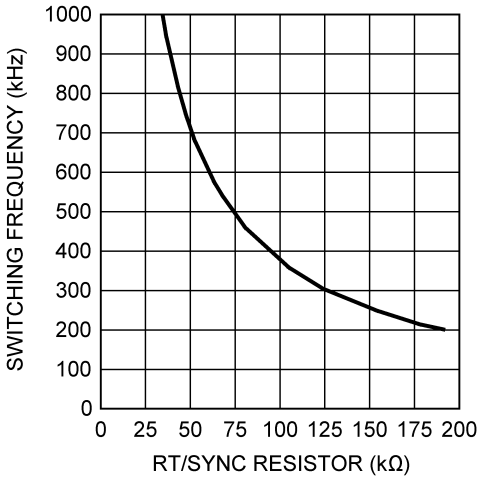

Figure 10. Switching Frequency vs RT/SYNC Resistor

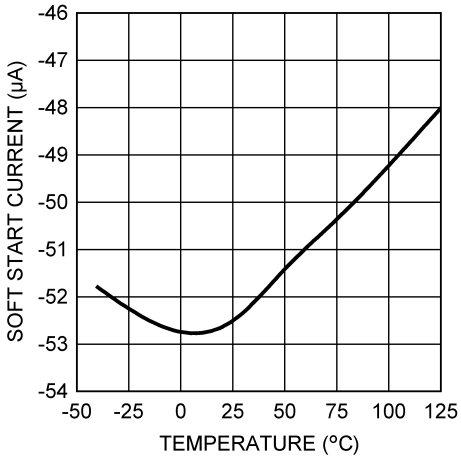

Figure 11. Soft-Start Current vs Temperature

7 Detailed Description

7.1 Overview

The LM22672 device incorporates a voltage mode constant frequency PWM architecture. In addition, input voltage feedforward is used to stabilize the loop gain against variations in input voltage. This allows the loop compensation to be optimized for transient performance. The power MOSFET, in conjunction with the diode, produce a rectangular waveform at the switch pin that swings from about zero volts to VIN. The inductor and output capacitor average this waveform to become the regulator output voltage. By adjusting the duty cycle of this waveform, the output voltage can be controlled. The error amplifier compares the output voltage with the internal reference and adjusts the duty cycle to regulate the output at the desired value.

The internal loop compensation of the -ADJ option is optimized for outputs of 5 V and below. If an output voltage of 5 V or greater is required, the -5.0 option can be used with an external voltage divider. The minimum output voltage is equal to the reference voltage, that is, 1.285 V (typ).

7.2 Functional Block Diagram

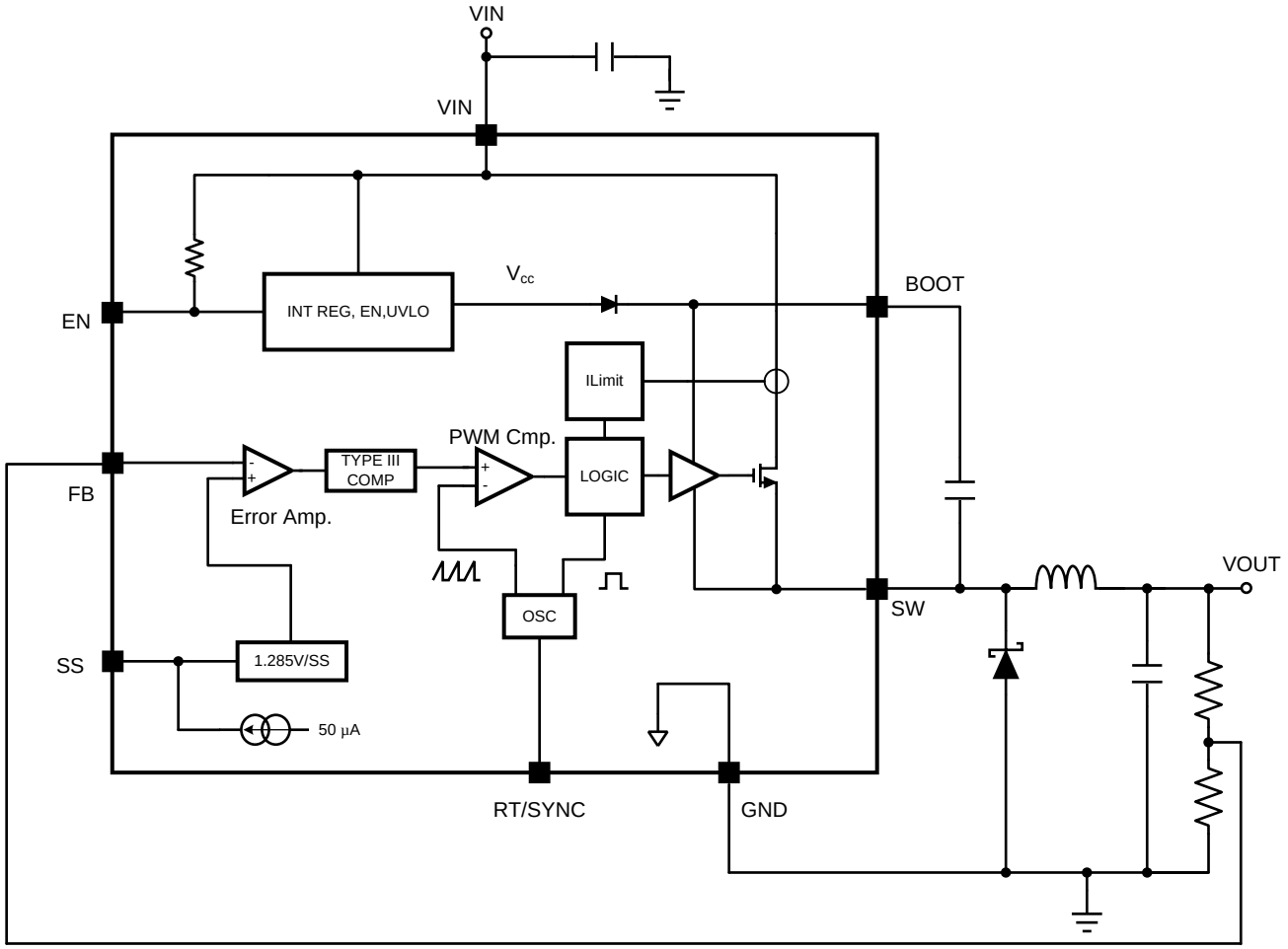

Copyright © 2008–2014, Texas Instruments Incorporated

7.3 Feature Description

7.3.1 Precision Enable and UVLO

The precision enable input (EN) is used to control the regulator. The precision feature allows simple sequencing of multiple power supplies with a resistor divider from another supply. Connecting this pin to ground or to a voltage less than 1.6 V (typ) will turn off the regulator. The current drain from the input supply, in this state, is 25 µA (typ) at an input voltage of 12 V. The EN input has an internal pullup of about 6 µA. Therefore this pin can be left floating or pulled to a voltage greater than 2.2 V (typ) to turn the regulator on. The hysteresis on this input is about 0.6 V (typ) above the 1.6-V (typ) threshold. When driving the enable input, the voltage must never exceed the 6 V absolute maximum specification for this pin.

Although an internal pullup is provided on the EN pin, it is good practice to pull the input high, when this feature is not used, especially in noisy environments. This can most easily be done by connecting a resistor between VIN and the EN pin. The resistor is required, because the internal zener diode, at the EN pin, will conduct for voltages above about 6 V. The current in this zener must be limited to less than 100 µA. A resistor of 470 kΩ will limit the current to a safe value for input voltages as high 42 V. Smaller values of resistor can be used at lower input voltages.

The LM22672 device also incorporates an input undervoltage lock-out (UVLO) feature. This prevents the regulator from turning on when the input voltage is not great enough to properly bias the internal circuitry. The rising threshold is 4.3 V (typ) while the falling threshold is 3.9 V (typ). In some cases these thresholds may be too low to provide good system performance. The solution is to use the EN input as an external UVLO to disable the part when the input voltage falls below a lower boundary. This is often used to prevent excessive battery discharge or early turn-on during start-up. This method is also recommended to prevent abnormal device operation in applications where the input voltage falls below the minimum of 4.5 V. Figure 12 shows the connections to implement this method of UVLO. Equation 1 and Equation 2 can be used to determine the correct resistor values.

$$R_{ENT} = R_{ENB} \cdot \left(\frac{V_{off}}{V_{EN}} - 1 \right) \tag{1}$$

$$V_{on} = V_{off} \cdot \left(\frac{V_{EN} + V_{ENHYST}}{V_{EN}} \right) \tag{2}$$

Where:

V_{off} is the input voltage where the regulator shuts off.

V_{on} is the voltage where the regulator turns on.

Due to the 6 µA pullup, the current in the divider should be much larger than this. A value of 20 kΩ, for R_{ENB} is a good first choice. Also, a zener diode may be needed between the EN pin and ground in order to comply with the absolute maximum ratings on this pin.

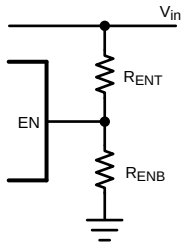

Figure 12. External UVLO Connections

7.3.2 Soft-Start

The soft-start feature allows the regulator to gradually reach steady-state operation, thus reducing start-up stresses. The internal soft-start feature brings the output voltage up in about 500 µs. This time can be extended by using an external capacitor connected to the SS pin. Values in the range of 100 nF to 1 µF are recommended. The approximate soft-start time can be estimated from Equation 3.

Feature Description (continued)

$$T_{SS} \sim 26 \times 10^3 \cdot C_{SS} \quad (3)$$

Soft-start is reset any time the part is shut down or a thermal overload event occurs.

7.3.3 Switching Frequency Adjustment and Synchronization

The LM22672 device will operate in three different modes, depending on the condition of the RT/SYNC pin. With the RT/SYNC pin floating, the regulator will switch at the internally set frequency of 500 kHz (typ). With a resistor in the range of 25 kΩ to 200 kΩ, connected from RT/SYNC to ground, the internal switching frequency can be adjusted from 1 MHz to 200 kHz. Figure 13 shows the typical curve for switching frequency versus the external resistance connected to the RT/SYNC pin. The accuracy of the switching frequency, in this mode, is slightly worse than that of the internal oscillator; about ±25% is to be expected. Finally, an external clock can be applied to the RT/SYNC pin to allow the regulator to synchronize to a system clock or another LM22672. The mode is set during start up of the regulator. When the LM22672 is enabled, or after V_{IN} is applied, a weak pullup is connected to the RT/SYNC pin and, after approximately 100 µs, the voltage on the pin is checked against a threshold of about 0.8 V. With the RT/SYNC pin open, the voltage floats above this threshold, and the mode is set to run with the internal clock. With a frequency set resistor present, an internal reference holds the pin voltage at 0.8 V; thus, the resulting current sets the mode to allow the resistor to control the clock frequency. If the external circuit forces the RT/SYNC pin to a voltage much greater or less than 0.8 V, the mode is set to allow external synchronization. The mode is latched until either the EN or the input supply is cycled.

The choice of switching frequency is governed by several considerations. As an example, lower frequencies may be desirable to reduce switching losses or improve duty cycle limits. Higher frequencies, or a specific frequency, may be desirable to avoid problems with EMI or reduce the physical size of external components. The flexibility of increasing the switching frequency above 500 kHz can also be used to operate outside a critical signal frequency band for a given application. Keep in mind that the values of inductor and output capacitor cannot be reduced dramatically by operating above 500 kHz. This is true because the design of the internal loop compensation restricts the range of these components.

Frequency synchronization requires some care. First the external clock frequency must be greater than the internal clock frequency, and less than 1 MHz. The maximum internal switching frequency is ensured in the *Electrical Characteristics* table.

NOTE

The frequency adjust feature and the synchronization feature can not be used simultaneously.

The synchronizing frequency must always be greater than the internal clock frequency. Secondly, the RT/SYNC pin must see a valid high or low voltage, during start-up, in order for the regulator to go into the synchronizing mode. Also, the amplitude of the synchronizing pulses must comport with V_{SYNC} levels found in the *Electrical Characteristics* table. The regulator will synchronize on the rising edge of the external clock. If the external clock is lost during normal operation, the regulator will revert to the 500 kHz (typ) internal clock.

If the frequency synchronization feature is used, current limit foldback is not operational; see the *Current Limit* section for details.

Copyright © 2008–2014, Texas Instruments Incorporated

Feature Description (continued)

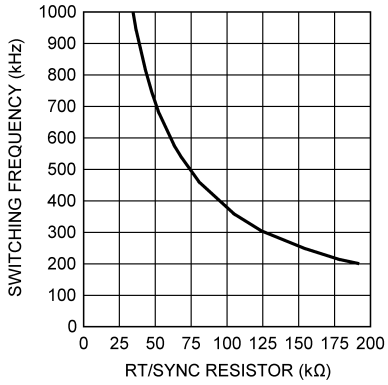

Figure 13. Switching Frequency vs RT/SYNC Resistor

7.3.4 Self-Synchronization

It is possible to synchronize multiple LM22672 regulators together to share the same switching frequency. This can be done by tying the RT/SYNC pins together through a MOSFET and connecting a 1 kΩ resistor to ground at each pin. Figure 14 shows this connection. The gate of the MOSFET should be connected to the regulator with the highest output voltage. Also, the EN pins of both regulators should be tied to the common system enable, in order to properly initialize both regulators. The operation is as follows: When the regulators are enabled, the outputs are low and the MOSFET is off. The 1 kΩ resistors pull the RT/SYNC pins low, thus enabling the synchronization mode. These resistors are small enough to pull the RT/SYNC pin low, rather than activate the frequency adjust mode. Once the output voltage of one of the regulators is sufficient to turn on the MOSFET, the two RT/SYNC pins are tied together and the regulators will run in synchronized mode. The two regulators will be clocked at the same frequency but slightly phase shifted according to the minimum off-time of the regulator with the fastest internal oscillator. The slight phase shift helps to reduce stress on the input capacitors of the regulator. It is important to choose a MOSFET with a low gate threshold voltage so that the MOSFET will be fully enhanced. Also, a MOSFET with low inter-electrode capacitance is required. The 2N7002 is a good choice.

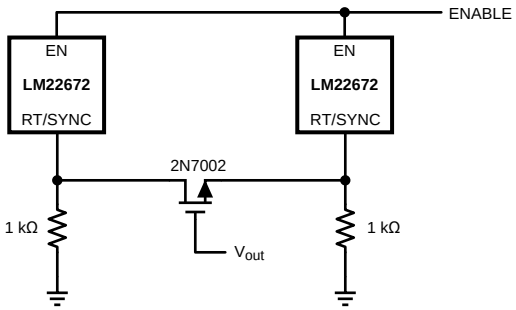

Figure 14. Self-Synchronizing Setup

7.3.5 Boot-Strap Supply

The LM22672 incorporates a floating high-side gate driver to control the power MOSFET. The supply for this driver is the external boot-strap capacitor connected between the BOOT pin and SW. A good quality 10 nF ceramic capacitor must be connected to these pins with short, wide PCB traces. One reason the regulator imposes a minimum off-time is to ensure that this capacitor recharges every switching cycle. A minimum load of about 5 mA is required to fully recharge the boot-strap capacitor in the minimum off-time. Some of this load can be provided by the output voltage divider, if used.

Copyright © 2008–2014, Texas Instruments Incorporated

Feature Description (continued)

7.3.6 Internal Loop Compensation

The LM22672 device has internal loop compensation designed to provide a stable regulator over a wide range of external power stage components. The internal compensation of the -ADJ option is optimized for output voltages below 5 V. If an output voltage of 5 V or greater is needed, the -5.0 option with an external resistor divider can be used.

Ensuring stability of a design with a specific power stage (inductor and output capacitor) can be tricky. The LM22672 stability can be verified using the WEBENCH Designer online circuit simulation tool. A quick start spreadsheet can also be downloaded from the online product folder.

The complete transfer function for the regulator loop is found by combining the compensation and power stage transfer functions. The LM22672 has internal type III loop compensation, as detailed in Figure 15. This is the approximate "straight line" function from the FB pin to the input of the PWM modulator. The power stage transfer function consists of a dc gain and a second order pole created by the inductor and output capacitor(s). Due to the input voltage feedforward employed in the LM22672, the power stage dc gain is fixed at 20 dB. The second order pole is characterized by its resonant frequency and its quality factor (Q). For a first pass design, the product of inductance and output capacitance should conform to Equation 4.

$$L \cdot C_{out} \approx 1.1 \times 10^{-9} \tag{4}$$

Alternatively, this pole should be placed between 1.5 kHz and 15 kHz and is given by Equation 5.

$$F_o = \frac{1}{2\pi \cdot \sqrt{L \cdot C_{out}}} \tag{5}$$

The Q factor depends on the parasitic resistance of the power stage components and is not typically in the control of the designer. Of course, loop compensation is only one consideration when selecting power stage components; see the *Application Information* section for more details.

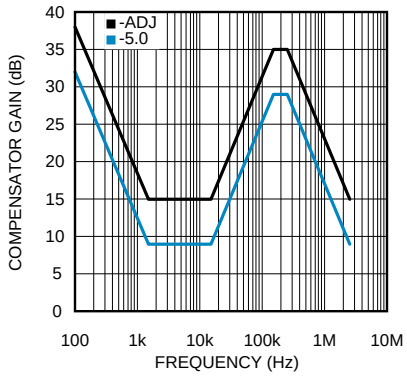

Figure 15. Compensator Gain

In general, hand calculations or simulations can only aid in selecting good power stage components. Good design practice dictates that load and line transient testing should be done to verify the stability of the application. Also, Bode plot measurements should be made to determine stability margins. *AN-1889 How to Measure the Loop Transfer Function of Power Supplies* (SNVA364) shows how to perform a loop transfer function measurement with only an oscilloscope and function generator.

7.4 Device Functional Mode

7.4.1 Current Limit

The LM22672 device has current limiting to prevent the switch current from exceeding safe values during an accidental overload on the output. This peak current limit is found in the *Electrical Characteristics* table under the heading of I_{CL}. The maximum load current that can be provided, before current limit is reached, is determined from Equation 6.

Copyright © 2008–2014, Texas Instruments Incorporated

Device Functional Mode (continued)

$$I_{out}\Big|_{max} \approx I_{CL} - \frac{(V_{in} - V_{out})}{2 \cdot L \cdot F_{sw}} \cdot \frac{V_{out}}{V_{in}} \tag{6}$$

Where:

L is the value of the power inductor.

When the LM22672 device enters current limit, the output voltage will drop and the peak inductor current will be fixed at I_{CL} at the end of each cycle. The switching frequency will remain constant while the duty cycle drops. The load current will not remain constant, but will depend on the severity of the overload and the output voltage.

For very severe overloads ("short-circuit"), the regulator changes to a low frequency current foldback mode of operation. The frequency foldback is about 1/5 of the nominal switching frequency. This will occur when the current limit trips before the minimum on-time has elapsed. This mode of operation is used to prevent inductor current "run-away", and is associated with very low output voltages when in overload. Equation 7 can be used to determine what level of output voltage will cause the part to change to low frequency current foldback.

$$V_x \le V_{in} \cdot F_{sw} \cdot T_{on} \cdot 1.8 \tag{7}$$

Where:

F_{sw} is the normal switching frequency.

V_{in} is the maximum for the application.

If the overload drives the output voltage to less than or equal to V_x, the part will enter current foldback mode. If a given application can drive the output voltage to ≤ V_x during an overload, then a second criterion must be checked. Equation 8 gives the maximum input voltage, when in this mode, before damage occurs.

$$V_{in} \le \frac{V_{sc} + 0.4}{T_{on} \cdot F_{sw} \cdot 0.36} \tag{8}$$

Where:

V_{sc} is the value of output voltage during the overload.

F_{sw} is the normal switching frequency.

NOTE

If the input voltage should exceed this value, while in foldback mode, the regulator and/or the diode may be damaged.

It is important to note that the voltages in these equations are measured at the inductor. Normal trace and wiring resistance will cause the voltage at the inductor to be higher than that at a remote load. Therefore, even if the load is shorted with zero volts across its terminals, the inductor will still see a finite voltage. It is this value that should be used for V_x and V_{sc} in the calculations. In order to return from foldback mode, the load must be reduced to a value much lower than that required to initiate foldback. This load "hysteresis" is a normal aspect of any type of current limit foldback associated with voltage regulators.

If the frequency synchronization feature is used, the current limit frequency foldback is not operational, and the system may not survive a hard short-circuit at the output.

The safe operating areas, when in short circuit mode, are shown in Figure 16 through Figure 18 for different switching frequencies. Operating points below and to the right of the curve represent safe operation.

NOTE

The curves shown in Figure 16, Figure 17, and Figure 18 are not valid when the LM22672 is in frequency synchronization mode.

Copyright © 2008–2014, Texas Instruments Incorporated

Device Functional Mode (continued)

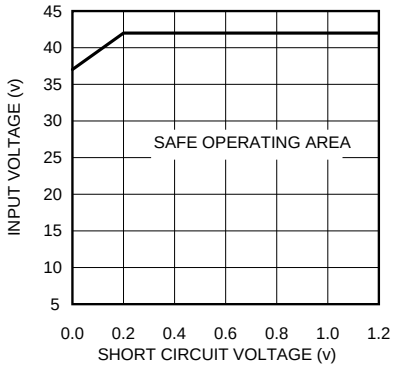

Figure 16. SOA at 300 kHz

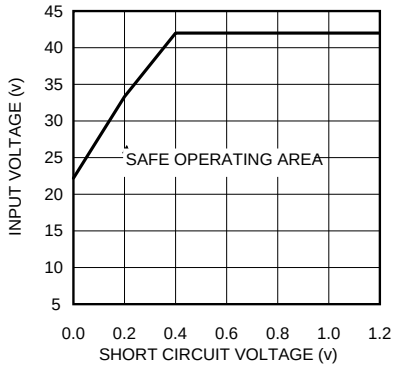

Figure 17. SOA at 500 kHz

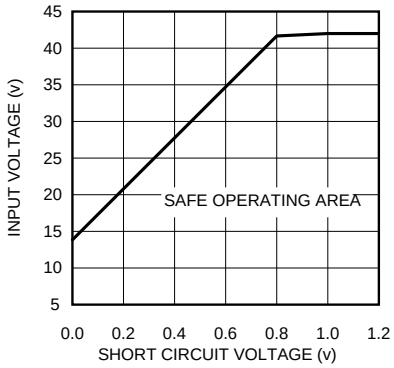

Figure 18. SOA at 800 kHz

7.4.2 Thermal Protection

Internal thermal shutdown circuitry protects the LM22672 should the maximum junction temperature be exceeded. This protection is activated at about 150°C, with the result that the regulator will shutdown until the temperature drops below about 135°C.

Copyright © 2008–2014, Texas Instruments Incorporated

Device Functional Mode (continued)

7.4.3 Duty-Cycle Limits

Ideally the regulator would control the duty cycle over the full range of zero to one. However due to inherent delays in the circuitry, there are limits on both the maximum and minimum duty cycles that can be reliably controlled. This in turn places limits on the maximum and minimum input and output voltages that can be converted by the LM22672. A minimum on-time is imposed by the regulator in order to correctly measure the switch current during a current limit event. A minimum off-time is imposed in order the re-charge the bootstrap capacitor. Equation 9 can be used to determine the approximate maximum input voltage for a given output voltage.

$$V_{in}\Big|_{max} \approx \frac{V_{out} + 0.4}{T_{on} \cdot F_{sw} \cdot 1.8} \tag{9}$$

Where:

F_{sw} is the switching frequency.

T_{ON} is the minimum on-time.

Both parameters can be found in the *Electrical Characteristics* table.

If the frequency adjust feature is used, that value should be used for F_{sw}. Nominal values should be used. The worst case is lowest output voltage and highest switching frequency. If this input voltage is exceeded, the regulator will skip cycles, effectively lowering the switching frequency. The consequences of this are higher output voltage ripple and a degradation of the output voltage accuracy.

The second limitation is the maximum duty cycle before the output voltage will "dropout" of regulation. Equation 10 can be used to approximate the minimum input voltage before dropout occurs.

$$V_{in}\Big|_{min} \approx \frac{V_{out} + 0.4 + I_{out} \cdot R_L}{1 - T_{off} \cdot F_{sw} \cdot 1.8} + I_{out} \cdot R_{dson} \tag{10}$$

Where:

The values of T_{OFF} and $R_{DS(ON)}$ are found in the *Electrical Characteristics* table.

The worst case here is highest switching frequency and highest load. In this equation, R_L is the dc inductor resistance. Of course, the lowest input voltage to the regulator must not be less than 4.5 V (typ).

8 Application and Implementation

NOTE

Information in the following applications sections is not part of the TI component specification, and TI does not warrant its accuracy or completeness. TI's customers are responsible for determining suitability of components for their purposes. Customers should validate and test their design implementation to confirm system functionality.

8.1 Application Information

The LM22672 device is a step down dc-to-dc regulator. It is typically used to convert a higher dc voltage to a lower dc voltage with a maximum output current of 1 A. *Detailed Design Procedure* can be used to select components for the LM22670 device. Alternately, the WEBENCH® software may be used to generate complete designs. When generating a design, the WEBENCH® software utilizes iterative design procedure and accesses comprehensive databases of components. Go to WEBENCH Designer for more details. This section presents a simplified discussion of the design process.

8.1.1 Output Voltage Divider Selection

For output voltages between about 1.285 V and 5 V, the -ADJ option should be used, with an appropriate voltage divider as shown in Figure 19. Equation 11 can be used to calculate the resistor values of this divider:

$$R_{FBT} = \left[\frac{V_{out}}{1.285} - 1\right] \cdot R_{FBB} \tag{11}$$

A good value for R_{FBB} is 1k Ω. This will help to provide some of the minimum load current requirement and reduce susceptibility to noise pick-up. The top of R_{FBT} should be connected directly to the output capacitor or to the load for remote sensing. If the divider is connected to the load, a local high-frequency bypass should be provided at that location.

For output voltages of 5 V, the -5.0 option should be used. In this case no divider is needed and the FB pin is connected to the output. The approximate values of the internal voltage divider are as follows: 7.38k from the FB pin to the input of the error amplifier and 2.55k from there to ground.

Both the -ADJ and -5.0 options can be used for output voltages greater than 5 V, by using the correct output divider. As mentioned in the Internal Loop Compensation section, the -5.0 option is optimized for output voltages of 5 V. However, for output voltages greater than 5 V, this option may provide better loop bandwidth than the -ADJ option, in some applications. If the -5.0 option is to be used at output voltages greater than 5 V, Equation 12 should be used to determine the resistor values in the output divider:

$$R_{FBT} = \frac{R_{FBB} \cdot (V_{out} - 5)}{5 + R_{FBB} \cdot 5 \times 10^{-4}} \tag{12}$$

Again a value of R_{FBB} of about 1k Ω is a good first choice.

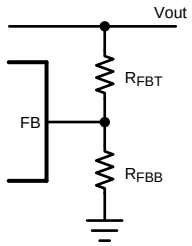

Figure 19. Output Voltage Divider

A maximum value of 10 kΩ is recommended for the sum of R_{FBB} and R_{FBT} to maintain good output voltage accuracy for the -ADJ option. A maximum of 2 kΩ is recommended for the -5.0 option. For the -5.0 option, the total internal divider resistance is typically 9.93 kΩ.

Copyright © 2008–2014, Texas Instruments Incorporated

Application Information (continued)

In all cases the output voltage divider should be placed as close as possible to the FB pin of the LM22672; because this is a high impedance input and is susceptible to noise pick-up.

8.1.2 Power Diode

A Schottky type power diode is required for all LM22672 applications. Ultra-fast diodes are not recommended and may result in damage to the IC due to reverse recovery current transients. The near ideal reverse recovery characteristics and low forward voltage drop of Schottky diodes are particularly important for high input voltage and low output voltage applications common to the LM22672. The reverse breakdown rating of the diode should be selected for the maximum V_{IN}, plus some safety margin. A good rule of thumb is to select a diode with a reverse voltage rating of 1.3 times the maximum input voltage.

Select a diode with an average current rating at least equal to the maximum load current that will be seen in the application.

8.2 Typical Application

8.2.1 Typical Buck Regulator Application

Figure 20 shows an example of converting an input voltage range of 5.5 V to 35 V, to an output of 3.3 V at 1 Amp.

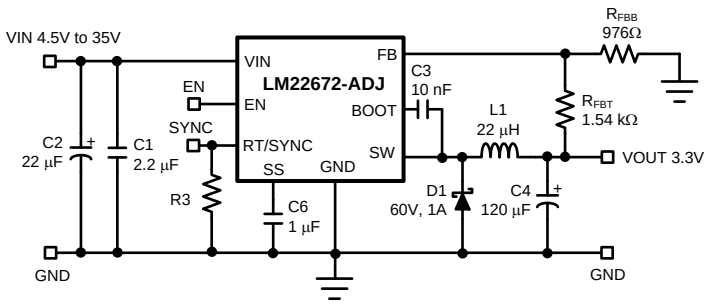

Figure 20. Typical Buck Regulator Application

8.2.1.1 Design Requirements

DESIGN PARAMETERS	EXAMPLE VALUE
Driver Supply Voltage (VIN)	4.5 to 42 V
Output Voltage (VOUT)	3.3 V
R_{FBT}	Calculated based on R_{FBB} and V_{REF} of 1.285 V.
R_{FBB}	1 kΩ to 10 kΩ
I_{OUT}	3 A

8.2.1.2 Detailed Design Procedure

8.2.1.2.1 External Components

The following guidelines should be used when designing a step-down (buck) converter with the LM22672.

8.2.1.2.1.1 Inductor

The inductor value is determined based on the load current, ripple current, and the minimum and maximum input voltages. To keep the application in continuous conduction mode (CCM), the maximum ripple current, I_{RIPPLE}, should be less than twice the minimum load current.

The general rule of keeping the inductor current peak-to-peak ripple around 30% of the nominal output current is a good compromise between excessive output voltage ripple and excessive component size and cost. Using this value of ripple current, the value of inductor, L, is calculated using Equation 13.

$$L = \frac{(V_{in} - V_{out}) \cdot V_{out}}{0.3 \cdot I_{out} \cdot F_{sw} \cdot V_{in}} \tag{13}$$

Where:

F_{sw} is the switching frequency.

V_{in} should be taken at its maximum value, for the given application.

The formula in Equation 13 provides a guide to select the value of the inductor L; the nearest standard value will then be used in the circuit.

Once the inductor is selected, the actual ripple current can be found from Equation 14:

$$\Delta I = \frac{(V_{in} - V_{out}) \cdot V_{out}}{L \cdot F_{sw} \cdot V_{in}} \tag{14}$$

Increasing the inductance will generally slow down the transient response but reduce the output voltage ripple. Reducing the inductance will generally improve the transient response but increase the output voltage ripple.

The inductor must be rated for the peak current, I_{PK}, in a given application, to prevent saturation. During normal loading conditions, the peak current is equal to the load current plus 1/2 of the inductor ripple current.

During an overload condition, as well as during certain load transients, the controller may trip current limit. In this case the peak inductor current is given by I_{CL}, found in the *Electrical Characteristics* table. Good design practice requires that the inductor rating be adequate for this overload condition.

NOTE

If the inductor is not rated for the maximum expected current, it can saturate resulting in damage to the LM22672 and/or the power diode.

8.2.1.2.1.2 Input Capacitor

The input capacitor selection is based on both input voltage ripple and RMS current. Good quality input capacitors are necessary to limit the ripple voltage at the VIN pin while supplying most of the regulator current during switch on-time. Low ESR ceramic capacitors are preferred. Larger values of input capacitance are desirable to reduce voltage ripple and noise on the input supply. This noise may find its way into other circuitry, sharing the same input supply, unless adequate bypassing is provided. A very approximate formula for determining the input voltage ripple is shown in Equation 15.

$$V_{ri} \approx \frac{I_{out}}{4 \cdot F_{sw} \cdot C_{in}} \tag{15}$$

Where:

V_{ri} is the peak-to-peak ripple voltage at the switching frequency.

Another concern is the RMS current passing through this capacitor. Equation 16 gives an approximation to this current:

$$I_{rms} \approx \frac{I_{out}}{2} \tag{16}$$

The capacitor must be rated for at least this level of RMS current at the switching frequency.

Copyright © 2008–2014, Texas Instruments Incorporated

All ceramic capacitors have large voltage coefficients, in addition to normal tolerances and temperature coefficients. To help mitigate these effects, multiple capacitors can be used in parallel to bring the minimum capacitance up to the desired value. This may also help with RMS current constraints by sharing the current among several capacitors. Many times it is desirable to use an electrolytic capacitor on the input, in parallel with the ceramics. The moderate ESR of this capacitor can help to damp any ringing on the input supply caused by long power leads. This method can also help to reduce voltage spikes that may exceed the maximum input voltage rating of the LM22672.

It is good practice to include a high frequency bypass capacitor as close as possible to the LM22672. This small case size, low ESR, ceramic capacitor should be connected directly to the VIN and GND pins with the shortest possible PCB traces. Values in the range of 0.47 µF to 1 µF are appropriate. This capacitor helps to provide a low impedance supply to sensitive internal circuitry. It also helps to suppress any fast noise spikes on the input supply that may lead to increased EMI.

8.2.1.2.1.3 Output Capacitor

The output capacitor is responsible for filtering the output voltage and supplying load current during transients. Capacitor selection depends on application conditions as well as ripple and transient requirements. Best performance is achieved with a parallel combination of ceramic capacitors and a low ESR SP™ or POSCAP™ type. Very low ESR capacitors such as ceramics reduce the output ripple and noise spikes, while higher value electrolytics or polymer provide large bulk capacitance to supply transients. Assuming very low ESR, Equation 17 gives an approximation to the output voltage ripple.

$$V_{ro} \approx \frac{(V_{in} - V_{out}) \cdot V_{out}}{8 \cdot V_{in}} \cdot \frac{1}{F_{sw}^2 \cdot L \cdot C_{out}} \tag{17}$$

Typically, a total value of 100 µF or greater is recommended for output capacitance.

In applications with V_{out} less than 3.3 V, it is critical that low ESR output capacitors are selected. This will limit potential output voltage overshoots as the input voltage falls below the device normal operating range.

If the switching frequency is set higher than 500 kHz, the capacitance value may not be reduced proportionally due to stability requirements. The internal compensation is optimized for circuits with a 500 kHz switching frequency. See the *Internal Loop Compensation* section for more details.

8.2.1.2.1.4 Boot-strap Capacitor

The bootstrap capacitor between the BOOT pin and the SW pin supplies the gate current to turn on the N-channel MOSFET. The recommended value of this capacitor is 10 nF and should be a good quality, low ESR ceramic capacitor.

In some cases it may be desirable to slow down the turn-on of the internal power MOSFET, in order to reduce EMI. This can be done by placing a small resistor in series with the C_{boot} capacitor. Resistors in the range of 10 Ω to 50 Ω can be used. This technique should only be used when absolutely necessary, because it will increase switching losses and, thereby reduce efficiency.

8.2.1.3 Application Curves

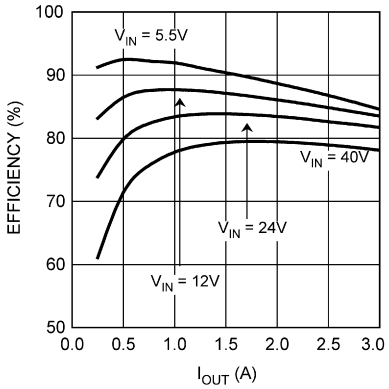

Figure 21. Efficiency vs I_{OUT} and V_{IN}, V_{OUT} = 3.3 V

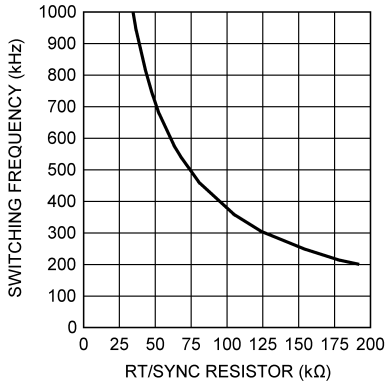

Figure 22. Switching Frequency vs RT/SYNC Resistor

Copyright © 2008–2014, Texas Instruments Incorporated

9 Power Supply Recommendations

The LM22672 device is designed to operate from an input voltage supply range between 4.5 V and 42 V. This input supply should be well regulated and able to withstand maximum input current and maintain a stable voltage. The resistance of the input supply rail should be low enough that an input current transient does not cause a high enough drop at the LM22672 supply voltage that can cause a false UVLO fault triggering and system reset. If the input supply is located more than a few inches from the LM22672 device, additional bulk capacitance may be required in addition to the ceramic bypass capacitors. The amount of bulk capacitance is not critical, but a 47 µF or 100 µF electrolytic capacitor is a typical choice.

10 Layout

10.1 Layout Guidelines

Board layout is critical for the proper operation of switching power supplies. First, the ground plane area must be sufficient for thermal dissipation purposes. Second, appropriate guidelines must be followed to reduce the effects of switching noise. Switch mode converters are very fast switching devices. In such cases, the rapid increase of input current combined with the parasitic trace inductance generates unwanted L di/dt noise spikes. The magnitude of this noise tends to increase as the output current increases. This noise may turn into electromagnetic interference (EMI) and can also cause problems in device performance. Therefore, care must be taken in layout to minimize the effect of this switching noise.

The most important layout rule is to keep the ac current loops as small as possible. Figure 23 shows the current flow in a buck converter. The top schematic shows a dotted line which represents the current flow during the FET switch on-state. The middle schematic shows the current flow during the FET switch off-state.

The bottom schematic shows the currents referred to as ac currents. These ac currents are the most critical because they are changing in a very short time period. The dotted lines of the bottom schematic are the traces to keep as short and wide as possible. This will also yield a small loop area reducing the loop inductance. To avoid functional problems due to layout, review the PCB layout example. Best results are achieved if the placement of the LM22672 device, the bypass capacitor, the Schottky diode, R_{FBB}, R_{FBT}, and the inductor are placed as shown in the example. Note that, in the layout shown, R1 = R_{FBB} and R2 = R_{FBT}. It is also recommended to use 2 oz copper boards or heavier to help thermal dissipation and to reduce the parasitic inductances of board traces. See application note *AN-1229 SIMPLE SWITCHER® PCB Layout Guidelines* (SNVA054) for more information.

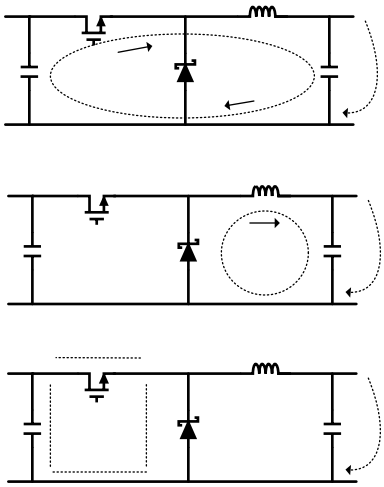

Figure 23. Current Flow in a Buck Application

10.2 Layout Example

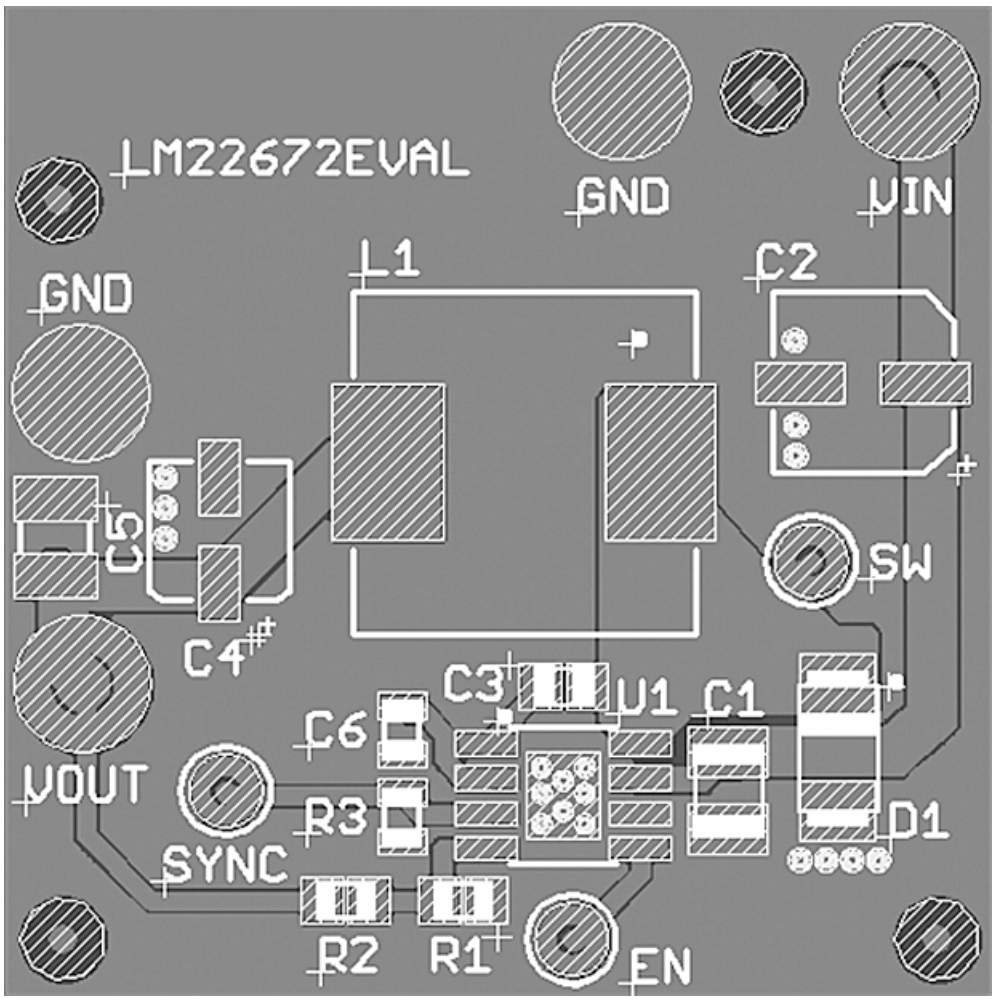

10.3 Thermal Considerations

The components with the highest power dissipation are the power diode and the power MOSFET internal to the LM22672 regulator. The easiest method to determine the power dissipation within the LM22672 is to measure the total conversion losses then subtract the power losses in the diode and inductor. The total conversion loss is the difference between the input power and the output power. An approximation for the power diode loss is shown in Equation 18:

$$P_D = I_{out} \cdot V_D \cdot \left[1 - \frac{V_{out}}{V_{in}}\right] \tag{18}$$

where

- V_D is the diode voltage drop.

An approximation for the inductor power is shown in Equation 19:

$$P_L = I_{out}^2 \cdot R_L \cdot 1.1 \tag{19}$$

Where:

R_L is the dc resistance of the inductor.

The 1.1 factor is an approximation for the ac losses.

Copyright © 2008–2014, Texas Instruments Incorporated

Thermal Considerations (continued)

The regulator has an exposed thermal pad to aid power dissipation. Adding multiple vias under the device to the ground plane will greatly reduce the regulator junction temperature. Selecting a diode with an exposed pad will also aid the power dissipation of the diode. The most significant variables that affect the power dissipation of the regulator are output current, input voltage and operating frequency. The power dissipated while operating near the maximum output current and maximum input voltage can be appreciable. The junction-to-ambient thermal resistance of the LM22672 will vary with the application. The most significant variables are the area of copper in the PC board, the number of vias under the IC exposed pad and the amount of forced air cooling provided. A large continuous ground plane on the top or bottom PCB layer will provide the most effective heat dissipation. The integrity of the solder connection from the IC exposed pad to the PC board is critical. Excessive voids will greatly diminish the thermal dissipation capacity. The junction-to-ambient thermal resistance of the LM22672 SO PowerPAD package is specified in the *Electrical Characteristics* table. See *AN-2020 Thermal Design By Insight, Not Hindsight* (SNVA419) for more information.

11 Device and Documentation Support

11.1 Documentation Support

11.1.1 Related Documentation

- *AN-2020 Thermal Design By Insight, Not Hindsight* (SNVA419)
- *AN-1229 SIMPLE SWITCHER® PCB Layout Guidelines* (SNVA054)
- *AN-1896 LM22672 Evaluation Board* (SNVA369
- *AN-1889 How to Measure the Loop Transfer Function of Power Supplies* (SNVA364)

11.2 Related Links

The table below lists quick access links. Categories include technical documents, support and community resources, tools and software, and quick access to sample or buy.

Table 1. Related Links

PARTS	PRODUCT FOLDER	SAMPLE & BUY	TECHNICAL DOCUMENTS	TOOLS & SOFTWARE	SUPPORT & COMMUNITY
LM22672	Click here	Click here	Click here	Click here	Click here
LM22672-Q1	Click here	Click here	Click here	Click here	Click here

11.3 Trademarks

WEBENCH, SIMPLE SWITCHER are registered trademarks of Texas Instruments.
All other trademarks are the property of their respective owners.

11.4 Electrostatic Discharge Caution

These devices have limited built-in ESD protection. The leads should be shorted together or the device placed in conductive foam during storage or handling to prevent electrostatic damage to the MOS gates.

11.5 Glossary

SLYZ022 — *TI Glossary*.

This glossary lists and explains terms, acronyms, and definitions.

12 Mechanical, Packaging, and Orderable Information

The following pages include mechanical, packaging, and orderable information. This information is the most current data available for the designated devices. This data is subject to change without notice and revision of this document. For browser-based versions of this data sheet, refer to the left-hand navigation.

Copyright © 2008–2014, Texas Instruments Incorporated

PACKAGING INFORMATION

Orderable part number	Status (1)	Material type (2)	Package | Pins	Package qty | Carrier	RoHS (3)	Lead finish/ Ball material (4)	MSL rating/ Peak reflow (5)	Op temp (°C)	Part marking (6)
LM22672MR-5.0/NOPB	Active	Production	SO PowerPAD (DDA) | 8	95 | TUBE	Yes	SN	Level-3-260C-168 HR	-40 to 125	L22672 5.0
LM22672MR-5.0/NOPB.A	Active	Production	SO PowerPAD (DDA) | 8	95 | TUBE	Yes	SN	Level-3-260C-168 HR	-40 to 125	L22672 5.0
LM22672MR-ADJ/NOPB	Active	Production	SO PowerPAD (DDA) | 8	95 | TUBE	Yes	SN	Level-3-260C-168 HR	-40 to 125	L22672 ADJ
LM22672MR-ADJ/NOPB.A	Active	Production	SO PowerPAD (DDA) | 8	95 | TUBE	Yes	SN	Level-3-260C-168 HR	-40 to 125	L22672 ADJ
LM22672MRE-5.0/NO.A	Active	Production	SO PowerPAD (DDA) | 8	250 | SMALL T&R	Yes	SN	Level-3-260C-168 HR	-40 to 125	L22672 5.0
LM22672MRE-5.0/NOPB	Active	Production	SO PowerPAD (DDA) | 8	250 | SMALL T&R	Yes	SN	Level-3-260C-168 HR	-40 to 125	L22672 5.0
LM22672MRE-ADJ/NO.A	Active	Production	SO PowerPAD (DDA) | 8	250 | SMALL T&R	Yes	SN	Level-3-260C-168 HR	-40 to 125	L22672 ADJ
LM22672MRE-ADJ/NOPB	Active	Production	SO PowerPAD (DDA) | 8	250 | SMALL T&R	Yes	SN	Level-3-260C-168 HR	-40 to 125	L22672 ADJ
LM22672MRX-5.0/NO.A	Active	Production	SO PowerPAD (DDA) | 8	2500 | LARGE T&R	Yes	SN	Level-3-260C-168 HR	-40 to 125	L22672 5.0
LM22672MRX-5.0/NOPB	Active	Production	SO PowerPAD (DDA) | 8	2500 | LARGE T&R	Yes	SN	Level-3-260C-168 HR	-40 to 125	L22672 5.0
LM22672MRX-ADJ/NO.A	Active	Production	SO PowerPAD (DDA) | 8	2500 | LARGE T&R	Yes	SN	Level-3-260C-168 HR	-40 to 125	L22672 ADJ
LM22672MRX-ADJ/NOPB	Active	Production	SO PowerPAD (DDA) | 8	2500 | LARGE T&R	Yes	SN	Level-3-260C-168 HR	-40 to 125	L22672 ADJ
LM22672QMR-5.0/NO.A	Active	Production	SO PowerPAD (DDA) | 8	95 | TUBE	Yes	SN	Level-3-260C-168 HR	-40 to 125	L22672 Q5.0
LM22672QMR-5.0/NOPB	Active	Production	SO PowerPAD (DDA) | 8	95 | TUBE	Yes	SN	Level-3-260C-168 HR	-40 to 125	L22672 Q5.0
LM22672QMR-ADJ/NO.A	Active	Production	SO PowerPAD (DDA) | 8	95 | TUBE	Yes	SN	Level-3-260C-168 HR	-40 to 125	L22672 QADJ
LM22672QMR-ADJ/NOPB	Active	Production	SO PowerPAD (DDA) | 8	95 | TUBE	Yes	SN	Level-3-260C-168 HR	-40 to 125	L22672 QADJ

Orderable part number	Status (1)	Material type (2)	Package | Pins	Package qty | Carrier	RoHS (3)	Lead finish/ Ball material (4)	MSL rating/ Peak reflow (5)	Op temp (°C)	Part marking (6)
LM22672QMRE-5.0/NO.A	Active	Production	SO PowerPAD (DDA) | 8	250 | SMALL T&R	Yes	SN	Level-3-260C-168 HR	-40 to 125	L22672 Q5.0
LM22672QMRE-5.0/NOPB	Active	Production	SO PowerPAD (DDA) | 8	250 | SMALL T&R	Yes	SN	Level-3-260C-168 HR	-40 to 125	L22672 Q5.0
LM22672QMRE-ADJ/NO.A	Active	Production	SO PowerPAD (DDA) | 8	250 | SMALL T&R	Yes	SN	Level-3-260C-168 HR	-40 to 125	L22672 QADJ
LM22672QMRE-ADJ/NOPB	Active	Production	SO PowerPAD (DDA) | 8	250 | SMALL T&R	Yes	SN	Level-3-260C-168 HR	-40 to 125	L22672 QADJ
LM22672QMRX-ADJ/NO.A	Active	Production	SO PowerPAD (DDA) | 8	2500 | LARGE T&R	Yes	SN	Level-3-260C-168 HR	-40 to 125	L22672 QADJ
LM22672QMRX-ADJ/NOPB	Active	Production	SO PowerPAD (DDA) | 8	2500 | LARGE T&R	Yes	SN	Level-3-260C-168 HR	-40 to 125	L22672 QADJ

(1) **Status:** For more details on status, see our product life cycle.

(2) **Material type:** When designated, preproduction parts are prototypes/experimental devices, and are not yet approved or released for full production. Testing and final process, including without limitation quality assurance, reliability performance testing, and/or process qualification, may not yet be complete, and this item is subject to further changes or possible discontinuation. If available for ordering, purchases will be subject to an additional waiver at checkout, and are intended for early internal evaluation purposes only. These items are sold without warranties of any kind.

(3) **RoHS values:** Yes, No, RoHS Exempt. See the TI RoHS Statement for additional information and value definition.

(4) **Lead finish/Ball material:** Parts may have multiple material finish options. Finish options are separated by a vertical ruled line. Lead finish/Ball material values may wrap to two lines if the finish value exceeds the maximum column width.

(5) **MSL rating/Peak reflow:** The moisture sensitivity level ratings and peak solder (reflow) temperatures. In the event that a part has multiple moisture sensitivity ratings, only the lowest level per JEDEC standards is shown. Refer to the shipping label for the actual reflow temperature that will be used to mount the part to the printed circuit board.

(6) **Part marking:** There may be an additional marking, which relates to the logo, the lot trace code information, or the environmental category of the part.

Multiple part markings will be inside parentheses. Only one part marking contained in parentheses and separated by a "~" will appear on a part. If a line is indented then it is a continuation of the previous line and the two combined represent the entire part marking for that device.

Important Information and Disclaimer: The information provided on this page represents TI's knowledge and belief as of the date that it is provided. TI bases its knowledge and belief on information provided by third parties, and makes no representation or warranty as to the accuracy of such information. Efforts are underway to better integrate information from third parties. TI has taken and continues to take reasonable steps to provide representative

and accurate information but may not have conducted destructive testing or chemical analysis on incoming materials and chemicals. TI and TI suppliers consider certain information to be proprietary, and thus CAS numbers and other limited information may not be available for release.

In no event shall TI's liability arising out of such information exceed the total purchase price of the TI part(s) at issue in this document sold by TI to Customer on an annual basis.

OTHER QUALIFIED VERSIONS OF LM22672, LM22672-Q1 :

- Catalog : LM22672
- Automotive : LM22672-Q1

NOTE: Qualified Version Definitions:

- Catalog - TI's standard catalog product
- Automotive - Q100 devices qualified for high-reliability automotive applications targeting zero defects

TAPE AND REEL INFORMATION

REEL DIMENSIONS

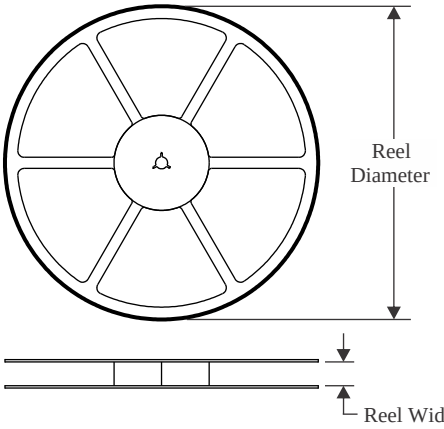

TAPE DIMENSIONS

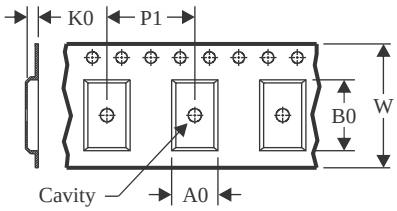

A0	Dimension designed to accommodate the component width
B0	Dimension designed to accommodate the component length
K0	Dimension designed to accommodate the component thickness
W	Overall width of the carrier tape
P1	Pitch between successive cavity centers

QUADRANT ASSIGNMENTS FOR PIN 1 ORIENTATION IN TAPE

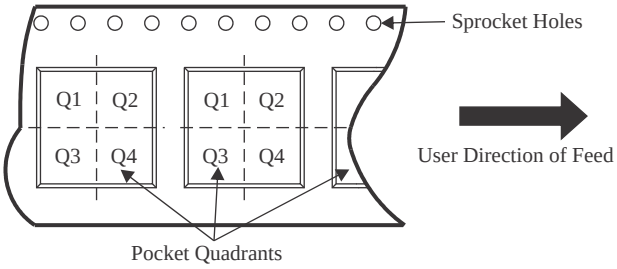

*All dimensions are nominal

Device	Package Type	Package Drawing	Pins	SPQ	Reel Diameter (mm)	Reel Width W1 (mm)	A0 (mm)	B0 (mm)	K0 (mm)	P1 (mm)	W (mm)	Pin1 Quadrant
LM22672MRE-5.0/NOPB	SO PowerPAD	DDA	8	250	178.0	12.4	6.5	5.4	2.0	8.0	12.0	Q1
LM22672MRE-ADJ/NOPB	SO PowerPAD	DDA	8	250	178.0	12.4	6.5	5.4	2.0	8.0	12.0	Q1
LM22672MRX-5.0/NOPB	SO PowerPAD	DDA	8	2500	330.0	12.4	6.5	5.4	2.0	8.0	12.0	Q1
LM22672MRX-ADJ/NOPB	SO PowerPAD	DDA	8	2500	330.0	12.4	6.5	5.4	2.0	8.0	12.0	Q1
LM22672QMRE-5.0/ NOPB	SO PowerPAD	DDA	8	250	178.0	12.4	6.5	5.4	2.0	8.0	12.0	Q1
LM22672QMRE-ADJ/NOPB	SO PowerPAD	DDA	8	250	178.0	12.4	6.5	5.4	2.0	8.0	12.0	Q1
LM22672QMRX-ADJ/NOPB	SO PowerPAD	DDA	8	2500	330.0	12.4	6.5	5.4	2.0	8.0	12.0	Q1

TAPE AND REEL BOX DIMENSIONS

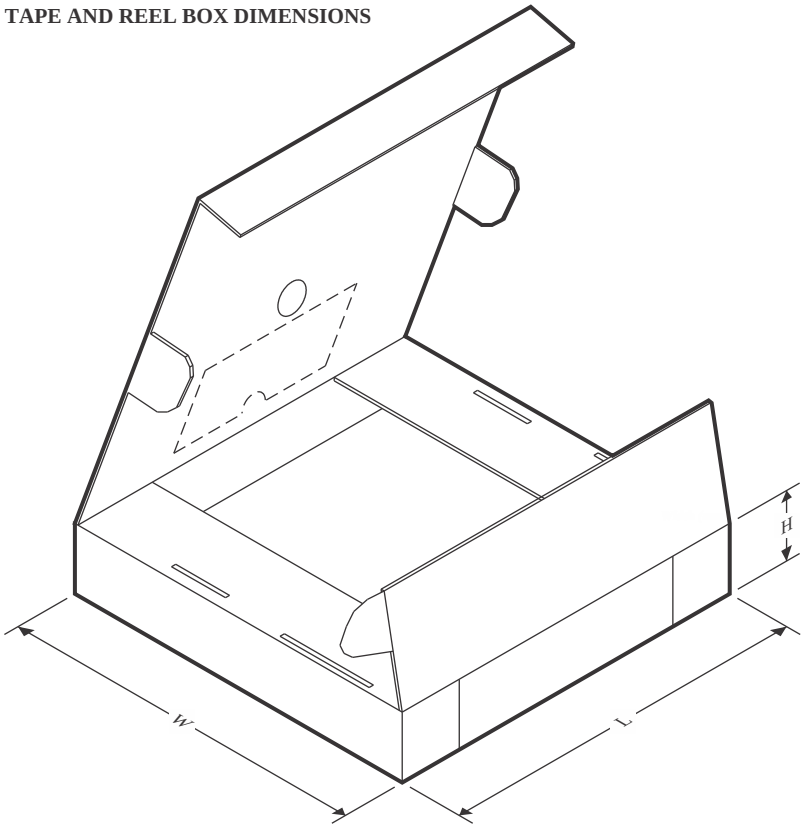

*All dimensions are nominal

Device	Package Type	Package Drawing	Pins	SPQ	Length (mm)	Width (mm)	Height (mm)
LM22672MRE-5.0/NOPB	SO PowerPAD	DDA	8	250	208.0	191.0	35.0
LM22672MRE-ADJ/NOPB	SO PowerPAD	DDA	8	250	208.0	191.0	35.0
LM22672MRX-5.0/NOPB	SO PowerPAD	DDA	8	2500	356.0	356.0	36.0
LM22672MRX-ADJ/NOPB	SO PowerPAD	DDA	8	2500	356.0	356.0	36.0
LM22672QMRE-5.0/NOPB	SO PowerPAD	DDA	8	250	208.0	191.0	35.0
LM22672QMRE-ADJ/NOPB	SO PowerPAD	DDA	8	250	208.0	191.0	35.0
LM22672QMRX-ADJ/NOPB	SO PowerPAD	DDA	8	2500	356.0	356.0	36.0

TUBE

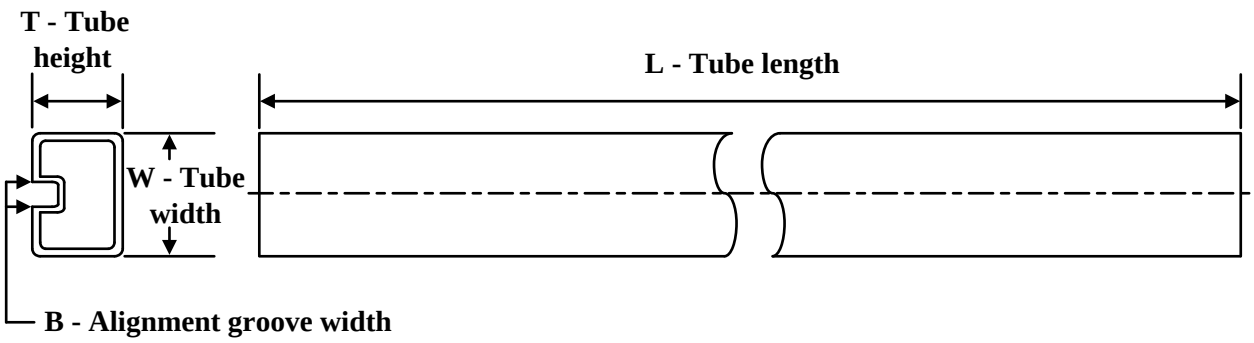

*All dimensions are nominal

Device	Package Name	Package Type	Pins	SPQ	L (mm)	W (mm)	T (µm)	B (mm)
LM22672MR-5.0/NOPB	DDA	HSOIC	8	95	495	8	4064	3.05
LM22672MR-5.0/NOPB.A	DDA	HSOIC	8	95	495	8	4064	3.05
LM22672MR-ADJ/NOPB	DDA	HSOIC	8	95	495	8	4064	3.05
LM22672MR-ADJ/NOPB.A	DDA	HSOIC	8	95	495	8	4064	3.05
LM22672QMR-5.0/NO.A	DDA	HSOIC	8	95	495	8	4064	3.05
LM22672QMR-5.0/NOPB	DDA	HSOIC	8	95	495	8	4064	3.05
LM22672QMR-ADJ/NO.A	DDA	HSOIC	8	95	495	8	4064	3.05
LM22672QMR-ADJ/NOPB	DDA	HSOIC	8	95	495	8	4064	3.05

DDA 8 PowerPAD™ SOIC - 1.7 mm max height

PLASTIC SMALL OUTLINE

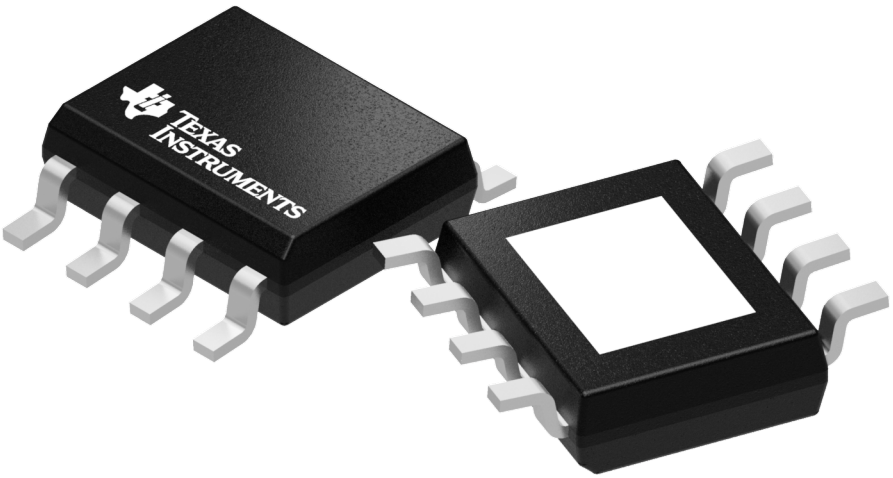

Images above are just a representation of the package family, actual package may vary.
Refer to the product data sheet for package details.

IMPORTANT NOTICE AND DISCLAIMER

TI PROVIDES TECHNICAL AND RELIABILITY DATA (INCLUDING DATA SHEETS), DESIGN RESOURCES (INCLUDING REFERENCE DESIGNS), APPLICATION OR OTHER DESIGN ADVICE, WEB TOOLS, SAFETY INFORMATION, AND OTHER RESOURCES “AS IS” AND WITH ALL FAULTS, AND DISCLAIMS ALL WARRANTIES, EXPRESS AND IMPLIED, INCLUDING WITHOUT LIMITATION ANY IMPLIED WARRANTIES OF MERCHANTABILITY, FITNESS FOR A PARTICULAR PURPOSE OR NON-INFRINGEMENT OF THIRD PARTY INTELLECTUAL PROPERTY RIGHTS.

These resources are intended for skilled developers designing with TI products. You are solely responsible for (1) selecting the appropriate TI products for your application, (2) designing, validating and testing your application, and (3) ensuring your application meets applicable standards, and any other safety, security, regulatory or other requirements.

These resources are subject to change without notice. TI grants you permission to use these resources only for development of an application that uses the TI products described in the resource. Other reproduction and display of these resources is prohibited. No license is granted to any other TI intellectual property right or to any third party intellectual property right. TI disclaims responsibility for, and you will fully indemnify TI and its representatives against, any claims, damages, costs, losses, and liabilities arising out of your use of these resources.

TI’s products are provided subject to TI’s Terms of Sale or other applicable terms available either on ti.com or provided in conjunction with such TI products. TI’s provision of these resources does not expand or otherwise alter TI’s applicable warranties or warranty disclaimers for TI products.

TI objects to and rejects any additional or different terms you may have proposed.

Mailing Address: Texas Instruments, Post Office Box 655303, Dallas, Texas 75265
Copyright © 2025, Texas Instruments Incorporated