UCC25710 LLC Half-Bridge Controller For Multi-String LED Lighting

1 Features

- Closed-Loop LED String Current Control
- PWM Dimming Input
- Adjustable F_{MIN} (3% accuracy), and F_{MAX} (7.5% Accuracy)
- LLC and Series LED Switch Control for Dimming
- Programmable Dimming LLC ON/OFF Ramp for Elimination of Audible Noise
- Closed-Loop Current Control at Low Dimming Duty Cycles
- Programmable Soft Start
- Accurate V_{REF} for Tight Output Regulation
- Overvoltage, Undervoltage and Input Overcurrent Protection With Auto-Restart Response
- Second Overcurrent Threshold With Latch-Off Response
- 400-mA/-800-mA Gate Drive Current
- Low Start-Up and Operating Currents
- Lead (Pb)-Free, 20-Pin, SOIC Package

2 Applications

- LED Backlight for LCD TV and Monitors
- LED General Lighting

3 Description

The UCC25710 device is an LLC half-bridge controller for accurate control of multi-string LED backlight applications. It is optimized for multi-transformer, multi-string LED architectures. Superior LED current matching in multiple strings can be achieved with this controller and architecture. Compared to existing LED backlight solutions, the multi-transformer architecture provides the highest overall efficiency from AC input to LED load.

The LLC controller function includes a Voltage Controlled Oscillator (VCO) with programmable F_{MIN} and F_{MAX}, half-bridge gate drivers with a fixed dead time of 500 ns and a GM current amplifier. The LLC power delivery is modulated by the controller's VCO frequency. The VCO has an accurate and programmable frequency range. At very low power levels the VCO frequency goes from F_{MAX} to zero to maximize efficiency at low LED currents.

Device Information(1)

PART NUMBER	PACKAGE	BODY SIZE (NOM)
UCC25710	SOIC (20)	12.80 mm × 7.50 mm

(1) For all available packages, see the orderable addendum at the end of the data sheet.

Simplified Application Diagram

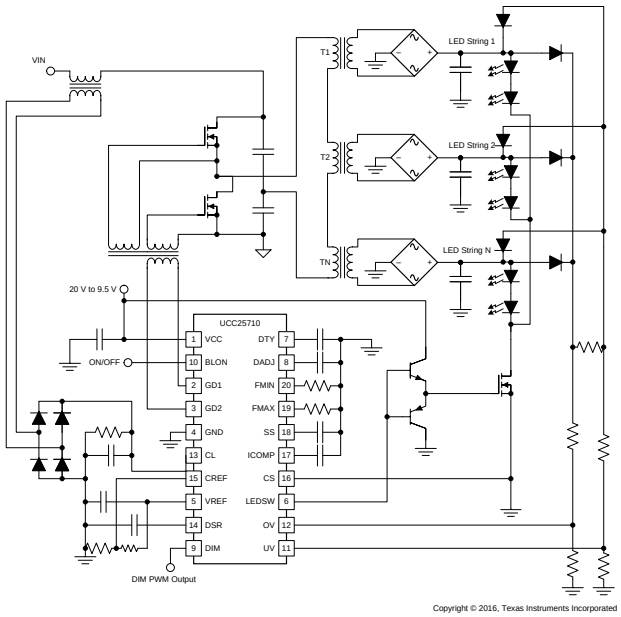

Efficiency and Linearity Results (Dual 45-W Strings)

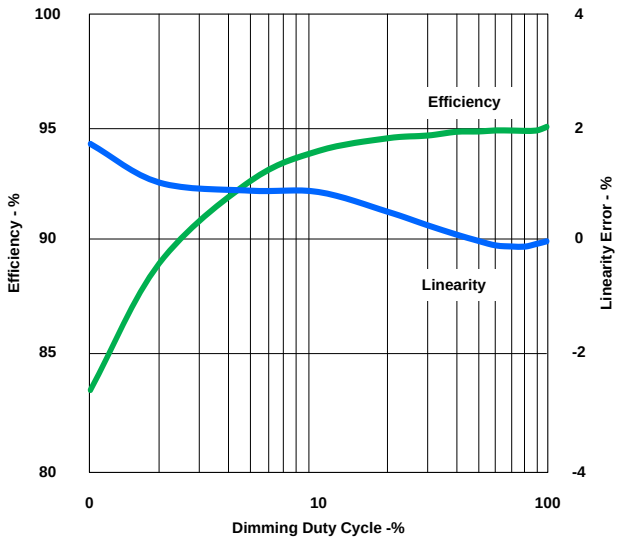

An IMPORTANT NOTICE at the end of this data sheet addresses availability, warranty, changes, use in safety-critical applications, intellectual property matters and other important disclaimers. PRODUCTION DATA.

Table of Contents

1 Features ... 1
2 Applications ... 1
3 Description ... 1
4 Revision History ... 2
5 Description (continued) ... 3
6 Pin Configuration and Functions ... 4
7 Specifications ... 6
7.1 Absolute Maximum Ratings ... 6
7.2 ESD Ratings ... 6
7.3 Recommended Operating Conditions ... 6
7.4 Thermal Information ... 7
7.5 Electrical Characteristics ... 7
7.6 Typical Characteristics ... 10
8 Detailed Description ... 13
8.1 Overview ... 13
8.2 Functional Block Diagram ... 14
8.3 Feature Description ... 15
8.4 Device Functional Modes ... 19
9 Application and Implementation ... 20
9.1 Application Information ... 20
9.2 Typical Application ... 20
10 Power Supply Recommendations ... 31
11 Layout ... 31
11.1 Layout Guidelines ... 31
11.2 Layout Example ... 32
12 Device and Documentation Support ... 33
12.1 Receiving Notification of Documentation Updates 33
12.2 Community Resource ... 33
12.3 Trademarks ... 33
12.4 Electrostatic Discharge Caution ... 33
12.5 Glossary ... 33
13 Mechanical, Packaging, and Orderable Information ... 33

4 Revision History

NOTE: Page numbers for previous revisions may differ from page numbers in the current version.

Changes from Revision A (May 2011) to Revision B	Page
• Added *ESD Ratings* table, *Feature Description* section, *Device Functional Modes*, *Application and Implementation* section, *Power Supply Recommendations* section, *Layout* section, *Device and Documentation Support* section, and *Mechanical, Packaging, and Orderable Information* section	1

Copyright © 2011–2016, Texas Instruments Incorporated

5 Description (continued)

The LED current loop reference is set by a divider off the V_{REF} 5-V output. The reference can be varied over a 0.5-V to 2.6-V range, allowing analog dimming to be combined with PWM dimming.

PWM dimming is used to control an external LED series switch and also to gate on and off the LLC power stage. The LEDSW output along with a simple drive circuit is used to switch on and off the LED string current. This output responds directly to the input signal at the dimming input, DIM. The LLC is also ramped on and off with the dimming PWM input. The on and off LLC dimming edges are ramped at programmable slew rates to control audible noise. The dimming function includes duty-cycle compensation to allow optimization of overall efficiency and dimming linearity over a maximum range.

The control voltage to the VCO is set by ICOMP (current amplifier output) during LED ON-times. During start-up the soft-start pin, SS, controls the VCO response until it exceeds ICOMP. During dimming the rise and fall rates of the VCO input are controlled by the voltage at the dimming slew rate, DSR, pin while the pedestal of VCO control level continues to be controlled by ICOMP. The current amplifier output is connected to ICOMP only during the commanded dimming LED ON-time. The LLC on-time is extended beyond the LED current ON-time at low dimming duty-cycles to maintain closed-loop control of the LED current.

Protection thresholds for LED string overvoltage and undervoltage conditions are set with external resistive dividers and accurate internal thresholds. Input current to the converter is monitored with both a restart and latch-off response depending on the overcurrent level. The controller also includes thermal shutdown protection.

The auto restart response to any fault includes a 10-ms reset period followed by a soft start. In the case of a severe input overcurrent, restart is disabled until the input supply is cycled through its UVLO threshold.

Copyright © 2011–2016, Texas Instruments Incorporated

6 Pin Configuration and Functions

DW Package
20-Pin SOIC
Top View

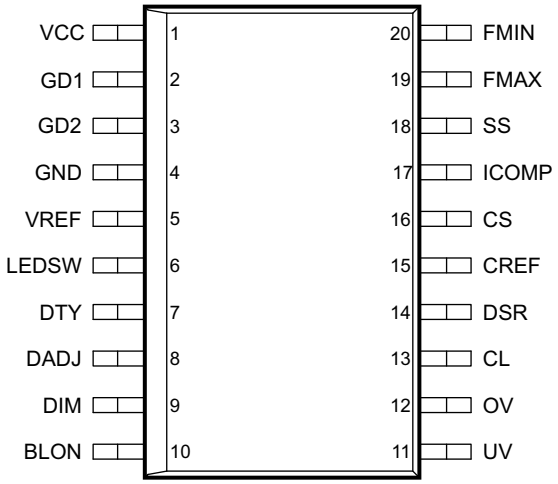

Pin Functions

PIN		TYPE	DESCRIPTION
NO.	NAME		
1	VCC	P	Connect a DC power voltage to VCC. Bypass VCC to GND with a 0.47-µF or larger ceramic capacitor using short PC-board traces. VCC directly supplies power to the gate drivers and VREF which biases all circuit blocks in the UCC25710. Undervoltage lockout (UVLO) comparator prevents operation until VCC rises above V_{VCCON}.
2, 3	GD1&2	O	Gate drive outputs operate 180° out of phase with a fixed 500 ns of dead time. They typically drive either primary end of a gate drive transformer. At start-up or during a fault recovery, initiating the LLC converter begins with GD2 turning on first.
4	GND	P	The ground pin is both the reference pin for the controller and the low-side return for the gate drive signals. Take special care to return all AC decoupling as close as possible to this pin and avoid any common trace length with analog signal return paths.
5	VREF	O	The internal 5-V supply and reference rail is brought out to this pin. A small decoupling capacitor to ground of 1 µF is required. VREF can support up to 10-mA current external to the device. VREF is enabled when VCC is above V_{VCCON} and BLON is above V_{BLON}.
6	LEDSW	O	The LED switch output is a control signal to a series LED switch. This output is low during a low level at the DIM input and whenever the LLC converter is disabled. PWM dimming is disabled during soft start, and the LEDSW output is high independent of the DIM input. A simple gate drive circuit is generally required at this output to drive the external FET.
7	DTY	I/O	The duty-cycle pin is averaged with a capacitor to ground to form a 1-D proportional voltage that is compared to the D_{ADJ} saw tooth voltage. The average voltage at this pin is 2.5 V(1-D)+0.1 V, where D is the dimming PWM duty-cycle the DIM input.
8	DADJ	I/O	A capacitor to ground at the duty-cycle adjust input sets the positive slope of a saw tooth waveform that is compared to a voltage proportional to 1-D where D is the dimming PWM duty-cycle of the DIM input. At the falling edge of the DIM input this comparison is used to extend the LLC ON-time beyond the ON-time of the LED series switch.
9	DIM	I	A PWM input signal at the dimming pin controls the average load current by cycling on and off both an external series LED switch and the gate drives to the LLC converter. A high on this pin corresponds to an ON condition. The controller ignores a low condition at this input during start-up or fault recovery until after the completion of a soft-start sequence.
10	BLON	I	Backlight ON is an enable signal for the control device. The signal is active high with a threshold of approx 1.2 V. The 5-V reference (VREF) is enabled with BLON which is the bias supply for many of the internal blocks of the device.

Copyright © 2011–2016, Texas Instruments Incorporated

Pin Functions (continued)

PIN		TYPE	DESCRIPTION
NO.	NAME		
11	UV	I	This pin is used to monitor for an undervoltage condition on the load. A level below V_{UVTH} on this pin causes the converter to disable the gate drive outputs as well as the LEDSW output. Immediately, a T_{RSTDLY} (10 ms) reset delay and soft-start sequence is initiated. The reset delay and soft-start sequence is repeated as long at the UV pin is low at the end of the sequence.
12	OV	I	This pin is used to monitor for an overvoltage condition on an LED string. A level above V_{OVTH} on this pin causes the converter to disable the gate drive outputs as well as the LEDSW output. If the OV input falls below its trip threshold the converter responds with a T_{RSTDLY} (10 ms) reset delay and soft start.
13	CL	I	Current limit input connects to a signal that represents the power converter's input current. Dual thresholds provide a shutdown retry or latch-off response.
14	DSR	I/O	The dimming slew rate pin is used to limit the rate of the VCO frequency change at the LLC on or off edges of a dimming PWM cycle. A capacitor to ground at this pin programs the maximum positive and negative slew rates that appear at the control input to the VCO. Pulling this pin below about 0.8 V disables the GD outputs.
15	CREF	I	Current Reference is used to set the regulating voltage for the LED current feedback signal at the CS input. This voltage input is set using a resistor divider from VREF. A nominal level of around 0.7 V is recommended although a range of 0.6 V to 2.7 V is accommodated. Internal reference levels of 0.5 V and 2.8 V replace the CREF input voltage at the current amplifier when the CREF pin voltage is respectively below or above these levels. The 0.5-V internal reference can be achieved by shorting CREF to ground, the internal 2.8-V reference can be achieved by shorting CREF to VREF.
16	CS	I	Current sense input monitors the LED current. This signal is compared to V_{CREF} by the current amplifier to regulate the total LED current.
17	ICOMP	O	This output pin is used to compensate the current regulating loop. A capacitor, or capacitor resistor series combination is typically used. During current regulation the voltage into the VCO is slaved to this pin. Pulling this pin below about 0.8 V disables the GD outputs. During PWM dimming OFF-time this pin is tri-stated and the compensation network is meant to hold the proper LLC control voltage until the LLC converter is turned back on. To optimize this operation any DC loading on this pin must be avoided.
18	SS	I/O	The soft-start pin is used to control the rate of change of the VCO frequency during start-up. At start-up a low value pullup current source, I_{SS}, is applied to this pin. A soft-start sequence is initiated at start-up and during any fault recovery. The SS pin must charge to 4.2 V before the controller allows PWM dimming to take place.
19	FMAX	I/O	The maximum frequency of the LLC converter is set by a resistor to ground at this pin. It is actually the difference between the maximum and minimum frequency that is set by this resistor.
20	FMIN	I/O	The minimum frequency of the LLC converter is set by a resistor to ground at this pin.

Copyright © 2011–2016, Texas Instruments Incorporated

7 Specifications

7.1 Absolute Maximum Ratings

over operating free-air temperature range (unless otherwise noted)[1]

		MIN	MAX	UNIT
Supply voltage	V_{CC}		20	V
LEDSW output current	I_{LEDSW}		±2	mA
VREF output current	I_{VREF}		–20	
Gate drive RMS current continuous GD1, GD2	I_{GD1}, I_{DG2}		25	
Gate drive voltage, GD1 GD2	V_{GD1}, V_{GD2}	–0.5	V_{CC} + 0.5	V
Voltage	CS, CL, OV, UV, BLON, DIM, CREF	–0.5	7	
Lead temperature 1.60 mm (1/16 inch) from case for 10 s			260	°C
Operating junction temperature, T_J		–55	150	
Storage temperature, T_{stg}		–65	150	

(1) Stresses beyond those listed under *Absolute Maximum Ratings* may cause permanent damage to the device. These are stress ratings only, which do not imply functional operation of the device at these or any other conditions beyond those indicated under *Recommended Operating Conditions*. Exposure to absolute-maximum-rated conditions for extended periods may affect device reliability.

7.2 ESD Ratings

			VALUE	UNIT
$V_{(ESD)}$	Electrostatic discharge	Human-body model (HBM), per ANSI/ESDA/JEDEC JS-001[1]	±2000	V
		Charged-device model (CDM), per JEDEC specification JESD22-C101[2]	±500	

(1) JEDEC document JEP155 states that 500-V HBM allows safe manufacturing with a standard ESD control process.
(2) JEDEC document JEP157 states that 250-V CDM allows safe manufacturing with a standard ESD control process.

7.3 Recommended Operating Conditions

all voltages are with respect to GND; currents are positive into and negative out of the specified terminal. -40°C < T_J = T_A < 125°C (unless otherwise noted)

		MIN	NOM	MAX	UNIT
V_{CC}	Operating input voltage	11		18	V
C_{VCC}	VCC bypass capacitor	0.47			µF
	Operating junction temperature	–40		125	°C
	Switching frequency at gate drive outputs	25		350	kHz
V_{CREF}	Input voltage (linear range)	0.6	1.65	2.7	V
V_{CREF}	Input voltage (using internal clamps)	0		V_{VREF}	
C_{VREF}	VREF bypass capacitor	0.22	1	2.2	µF
C_{SS}	SS capacitor	10		250	nF
C_{ICOMP}	ICOMP capacitor	0.5		47	
C_{DTY}	DTY capacitor	0.22		6.8	µF
C_{DSR}	DSR capacitor	0		2500	pF

Copyright © 2011–2016, Texas Instruments Incorporated

7.4 Thermal Information

THERMAL METRIC[1]		UCC25710 DW (SOIC) 20 PINS	UNIT
$R_{\theta JA}$	Junction-to-ambient thermal resistance	79	°C/W
$R_{\theta JC(top)}$	Junction-to-case (top) thermal resistance	43	°C/W
$R_{\theta JB}$	Junction-to-board thermal resistance	44	°C/W
ψ_{JT}	Junction-to-top characterization parameter	16	°C/W
ψ_{JB}	Junction-to-board characterization parameter	44	°C/W
$R_{\theta JC(bot)}$	Junction-to-case (bottom) thermal resistance	N/A	°C/W

(1) For more information about traditional and new thermal metrics, see the *Semiconductor and IC Package Thermal Metrics* application report.

7.5 Electrical Characteristics

T_A = –40°C to 125°C, $T_A = T_J$, V_{VCC} = 12 V, V_{BLON} = 3 V, V_{UV} = 3 V, V_{OV} = 2 , V_{CL} = 0 V, R_{MIN} = 100 kΩ, R_{MAX} = 4.99 kΩ, (unless otherwise noted)

PARAMETER		TEST CONDITIONS	MIN	TYP	MAX	UNIT
SUPPLY INPUT						
V_{VCCMAX}	VCC operating voltage				18	V
I_{OFF}	Supply current, off	V_{VCC} = 8 V		160	250	µA
I_{ON}	Supply current, on	Switching frequency = F_{MIN} (30 KHz)		1.4	2.1	mA
$I_{DISABLE}$	Supply current, disabled	V_{VCC} = 12 V, V_{BLON} = 0 V		240	350	µA
$I_{LATCHOFF}$	Supply current, latched off	Fault latch set		600	900	
UNDERVOLTAGE LOCKOUT						
V_{VCCON}	VCC turnon threshold	V_{VCC} low-to-high	8.6	9.3	10.1	V
V_{VCCOFF}	VCC turnoff threshold	V_{VCC} high-to-low	8.3	9	9.6	
V_{VCCHYS}	Hysteresis		0.2	0.35	0.5	
5-V REFERENCE OUTPUT						
V_{VREF}	5-V Reference	I_{VREF} = 0 to 10 mA, T_J = 25°C	4.95	5	5.05	V
V_{VREF}	5-V Reference	I_{VREF} = 0 to 10 mA, T_J = –40°C to 125°C	4.85	5	5.15	
CURRENT AMPLIFIER						
$V_{ICOMPIOS}$	Input offset voltage	V_{CREF} = 1.65 V, I_{COMP} tied to CS	–15		15	mV
I_{CS}	Input bias current at CS input	V_{CREF} = 1.65 V, V_{CS} = 1.65 V	–0.25		0.25	µA
I_{CR}	Input bias current at CREF input	V_{CREF} = 1.65 V, V_{CS} = 1.65 V	–0.25		0.25	
$V_{ICOMPHI}$	ICOMP high	V_{CS} = 0 V, V_{CREF} = 1.65 V, I_{ICOMP} = 50 µA	4.6	4.85		V
$V_{ICOMPLO}$	ICOMP low	V_{CS} = 3 V, V_{CREF} = 1.65 V, I_{ICOMP} = –50 µA		0.35	0.65	
GM_{ICOMP}	ICOMP transconductance	I_{COMP} tied to C_S, I_{ICOMP} = –100 µA to 100 µA	440	510	600	µs
$I_{ICOMPSRC}$	Source current ICOMP	V_{CS} = 0.65 V, V_{CREF} = 1.65 V, V_{ICOMP} = 2.5 V	120	150	180	µA
$I_{ICOMPSNK}$	Sink current ICOMP	V_{CS} = 2.65 V, V_{CREF} = 1.65 V, V_{ICOMP} = 2.5 V	195	245	295	
$I_{ICOMPLGK}$	LED off leakage current at ICOMP	V_{DIM} = 0 V, V_{ICOMP} = 2.5 V, T_J = –40°C to 85°C	–0.1		0.1	
$V_{CREFCLO}$	CREF low Clamp	V_{CREF} = 0 V, ICOMP tied to CS, regulating voltage at ICOMP	0.475	0.5	0.535	V
$V_{CREFCHI}$	CREF high Clamp	V_{CREF} = 3 V, ICOMP tied to CS, regulating voltage at ICOMP	2.65	2.8	2.95	

Copyright © 2011–2016, Texas Instruments Incorporated

Electrical Characteristics (continued)

T_A = –40°C to 125°C, T_A = T_J, V_{VCC} = 12 V, V_{BLON} = 3 V, V_{UV} = 3 V, V_{OV} = 2 , V_{CL} = 0 V, R_{MIN} = 100 kΩ, R_{MAX} = 4.99 kΩ, (unless otherwise noted)

PARAMETER		TEST CONDITIONS	MIN	TYP	MAX	UNIT
SOFT START						
I_{SS}	Soft-start charging current	V_{SS} = 2.25 V	2	2.5	3	µA
R_{SSDC}	Soft-start discharge resistance	V_{SS} = 1 V		3.4	5	kΩ
V_{SSTH}	Soft-start threshold	SS clamp released	3.95	4.15	4.4	V
T_{RSTDLY}	Reset delay	From UVLO turnon to start of soft start	7	10	13	ms
VOLTAGE CONTROLLED OSCILLATOR						
F_{MIN}	F_{MIN} GD1, GD2	R_{MIN} = 100 kΩ, V_{ICOMP} = 5 V	29.5	30.5	31.5	kHz
F_{MAX}	F_{MAX} GD1, GD2	R_{MIN} = 100 kΩ, R_{MAX} = 4.99 kΩ, V_{ICOMP} = 0.95 V	275	300	320	
T_{DT}	Dead-time GD1, GD2	R_{MIN} = 100 kΩ, V_{ICOMP} = 3 V	400	500	600	ns
T_{MATCH}	ON-time mismatching	R_{MIN} = 100 kΩ, V_{ICOMP} = 3 V	–50		50	
$V_{VCOTHLO}$	V_{ICOMP} VCO Threshold Low	Disable GD1, GD2, V_{ICOMP} high to low	0.8	0.9	0.95	V
V_{VCOMAX}	V_{ICOMP} for F_{MIN}	Frequency reaches F_{MIN}	3.8	4	4.2	
GATE DRIVERS						
V_{GDHI}	GD1, GD2 V_{OUT} high	I_{GD1}, I_{GD2} = –20 mA, below VCC		1.8	3	V
$R_{GDHSRES}$	GD1, GD2 ON-resistance high	I_{GD1}, I_{GD2} = –20 mA		14	30	Ω
V_{GDLO}	GD1, GD2 V_{OUT} low	I_{GD1}, I_{GD2} = 20 mA		0.08	0.2	V
$R_{GDLSRES}$	GD1, GD2 ON-resistance low	I_{GD1}, I_{GD2} = 20 mA		4	10	Ω
T_{GDRISE}	GD1, GD2 output rise time	C_{GD} = 1 nF, 1 V to 9 V		25	35	ns
T_{GDFALL}	GD1, GD2 output fall time	C_{GD} = 1 nF, 9 V to 1 V		20	30	
UNDERVOLTAGE PROTECTION						
V_{UVTH}	Undervoltage threshold	High-to-low on UV input	2.27	2.4	2.53	V
V_{UVHY}	Undervoltage threshold hysteresis		190	240	300	mV
I_{UV}	UV input bias current	V_{UV} = 2.7 V	–0.25		0.25	µA
OVERVOLTAGE PROTECTION						
V_{OVTH}	Overvoltage threshold	Low-to-high on OV input	2.46	2.6	2.74	V
V_{OVHY}	Overvoltage threshold hysteresis		190	240	300	mV
I_{OV}	OV input bias current	V_{OV} = 2.3 V	–0.25		0.25	µA
CURRENT LIMIT PROTECTION						
V_{CLTH}	Current limit threshold	Low-to-high on CL input	0.9	0.95	1	V
V_{CLHY}	Current limit threshold hysteresis		375	475	525	mV
V_{CLLTH}	Current limit latching threshold	Low-to-high on CL input	1.75	1.9	2.05	V
I_{CL}	CL input bias current	V_{CL} = 2.2 V	–0.25		0.25	µA
THERMAL SHUTDOWN						
t_{TSD}	Junction temperature at thermal shutdown	Temperature rising	135	160	185	°C
t_{HYS}	Thermal hysteresis			25	45	
BACKLIGHT ON INPUT						
R_{BLON}	RBLON pulldown resistance	Pull down to GND	100	200	350	kΩ
V_{BLON}	Enable threshold		0.8	1.2	1.6	V

Copyright © 2011–2016, Texas Instruments Incorporated

Electrical Characteristics (continued)

T_A = –40°C to 125°C, T_A = T_J, V_{VCC} = 12 V, V_{BLON} = 3 V, V_{UV} = 3 V, V_{OV} = 2 , V_{CL} = 0 V, R_{MIN} = 100 kΩ, R_{MAX} = 4.99 kΩ, (unless otherwise noted)

PARAMETER		TEST CONDITIONS	MIN	TYP	MAX	UNIT
PWM DIMMING						
V_{DIM}	Dimming input threshold		1.2	1.5	1.8	V
R_{DIM}	DIM pullup resistance	Pullup resistance to VREF, V_{DIM} = 0 V – 4.5 V	140	180	240	kΩ
$V_{LEDSWHI}$	High-level at LEDSW output	I_{LEDSW} = –100 µA, below VCC, V_{DIM} = 3 V		0.4	1	V
$V_{LEDSWLO}$	Low-level at LEDSW output	I_{LEDSW} = 100 µA, V_{DIM} = 0 V		0.2	0.5	
$R_{LEDSWHI}$	High-level output resistance	I_{LEDSW} = –500 µA – 0 µA, V_{DIM} = 3 V		4	6	kΩ
$R_{LEDSWLO}$	Low-level output resistance	I_{LEDSW} = 500 µA – 0 µA, V_{DIM} = 0 V		2	3	
R_{DTY}	DTY output resistance	V_{DTY} = 0 V – 2.5 V , V_{DIM} = 0 V	30	40	50	
V_{DTYH}	DTY max level	V_{DIM} = 0 V	2.45	2.6	2.7	V
V_{DTYL}	DTY min level	V_{DIM} = 3 V	0.05	0.1	0.15	
I_{DADJCH}	DADJ charging current	V_{DADJ} = 2.5 V, V_{DIM} = 0 V	16	20	25	µA
R_{DADJDC}	DADJ discharge resistance	V_{DADJ} = 0.5 V, V_{DIM} = 3 V		1	1.5	kΩ
T_{DADJ}	DADJ delay	C_{ADJ} = 2.2 nF, V_{DTY} = 2.6 V, delay from DIM high-to-low to DSR discharge	225	275	330	µs
I_{DSRCH}	DSR slew rate charge current	V_{DSR} = 2.5 V, V_{ICOMP} = 4 V, V_{DIM} = 3 V	38	44	50	µA
I_{DSRDC}	DSR slew rate discharge current	V_{DSR} = 2.5 V, V_{ICOMP} = 4 V, V_{DIM} = 0 V	38	44	50	
V_{DSRCL}	DSR clamp above ICOMP	V_{ICOMP} = 2 V, level above V_{ICOMP}	0.45	0.7	0.95	V

Copyright © 2011–2016, Texas Instruments Incorporated

7.6 Typical Characteristics

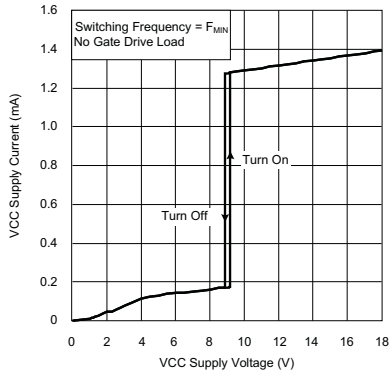

Figure 1. Supply Current vs Dimming Duty Cycle

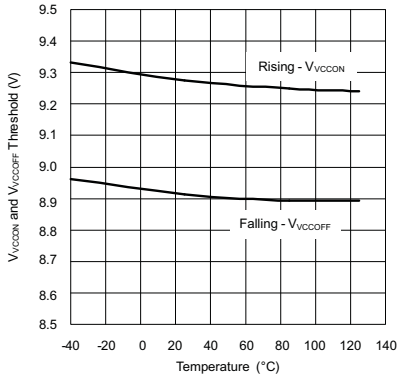

Figure 2. VVCCON and VVCOFF Threshold vs Temperature

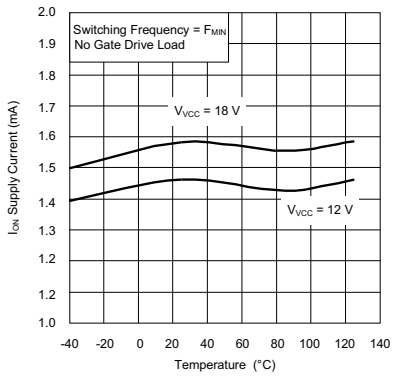

Figure 3. Supply Current vs Temperature

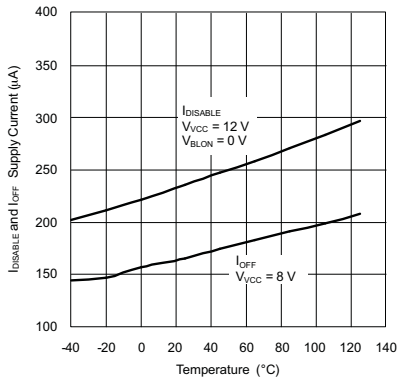

Figure 4. IDISABLE and IOFF Supply Current vs Temperature

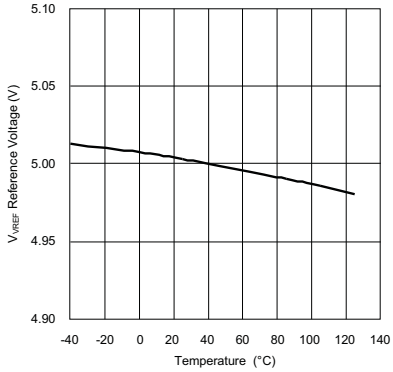

Figure 5. Reference Voltage vs Temperature

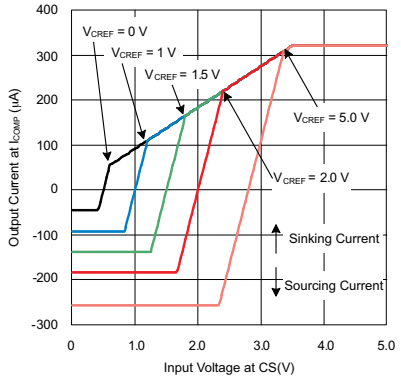

Figure 6. Output Current (ICOMP) vs Input Voltage (CS)

Copyright © 2011–2016, Texas Instruments Incorporated

Typical Characteristics (continued)

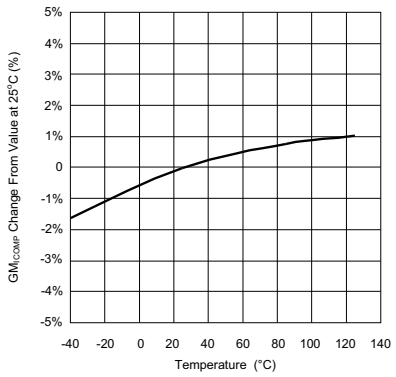

Figure 7. GMICOMP vs Temperature

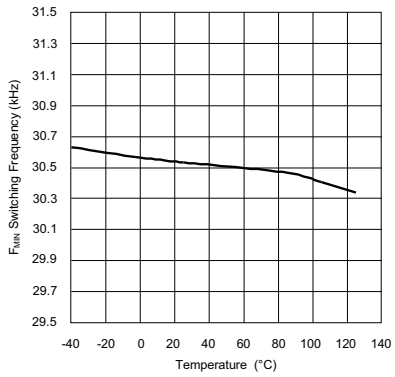

Figure 8. Minimum Switching Frequency vs Temperature

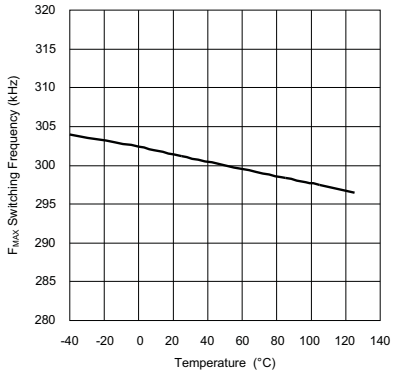

Figure 9. Maximum Switching Frequency vs Temperature

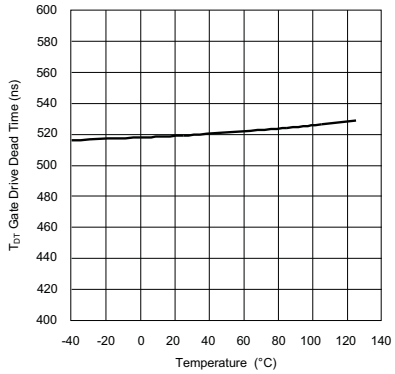

Figure 10. Gate Drive Dead Time vs Temperature

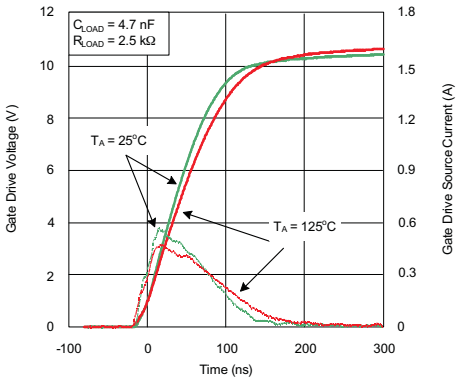

Figure 11. Gate Driver Outputs (Rising Edge) vs Time

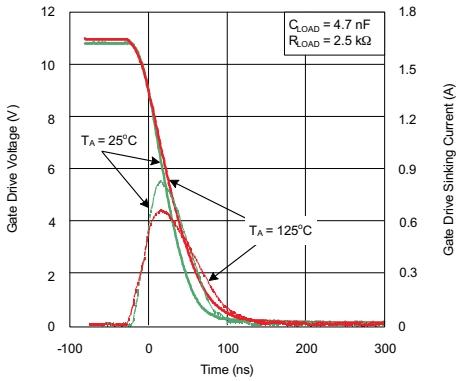

Figure 12. Gate Driver Outputs (Falling Edge) vs Time

Typical Characteristics (continued)

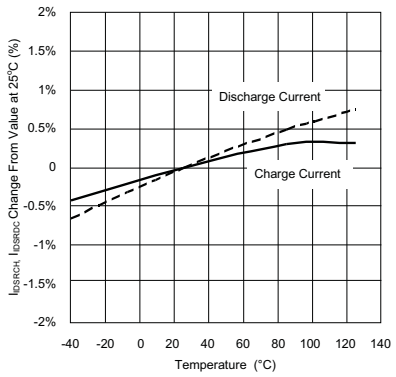

Figure 13. DSR Currents vs Temperature

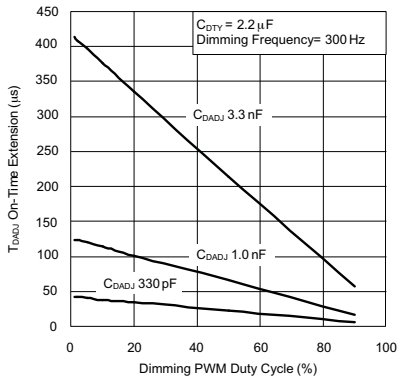

Figure 14. LLC ON-Time Extension vs Dimming Duty Cycle

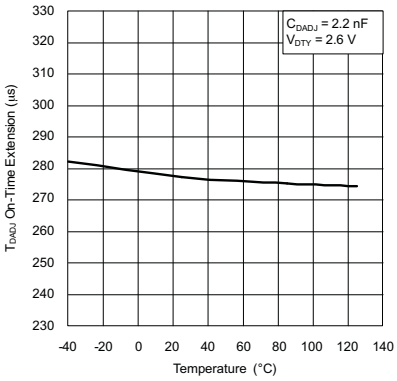

Figure 15. LLC ON-Time Extension vs Temperature

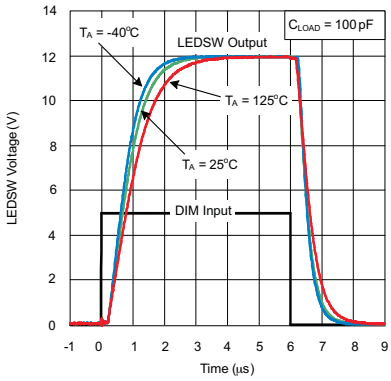

Figure 16. LEDSW Rise and Fall vs Time

Copyright © 2011–2016, Texas Instruments Incorporated

8 Detailed Description

8.1 Overview

The UCC25710 is a highly integrated LLC controller designed specifically for multi-string LED lighting applications. The half-bridge LLC control is combined with independent PWM dimming or non-dimming of the LED current for control of the light output.

The UCC25710 is designed to provide power from a high voltage DC bus, such as the output from a PFC stage. Input over current-sensing protects the system in the event of a fault and gate drive outputs provide the drive signals to the LLC stage. Output overvoltage and undervoltage provide additional protection. LED current is sensed with a resistor in series with the LED's. The UCC25710 has separate enable and dimming inputs.

This arrangement of a multi-transformer architecture, as shown in Figure 25, results in a highly efficient power supply.

8.2 Functional Block Diagram

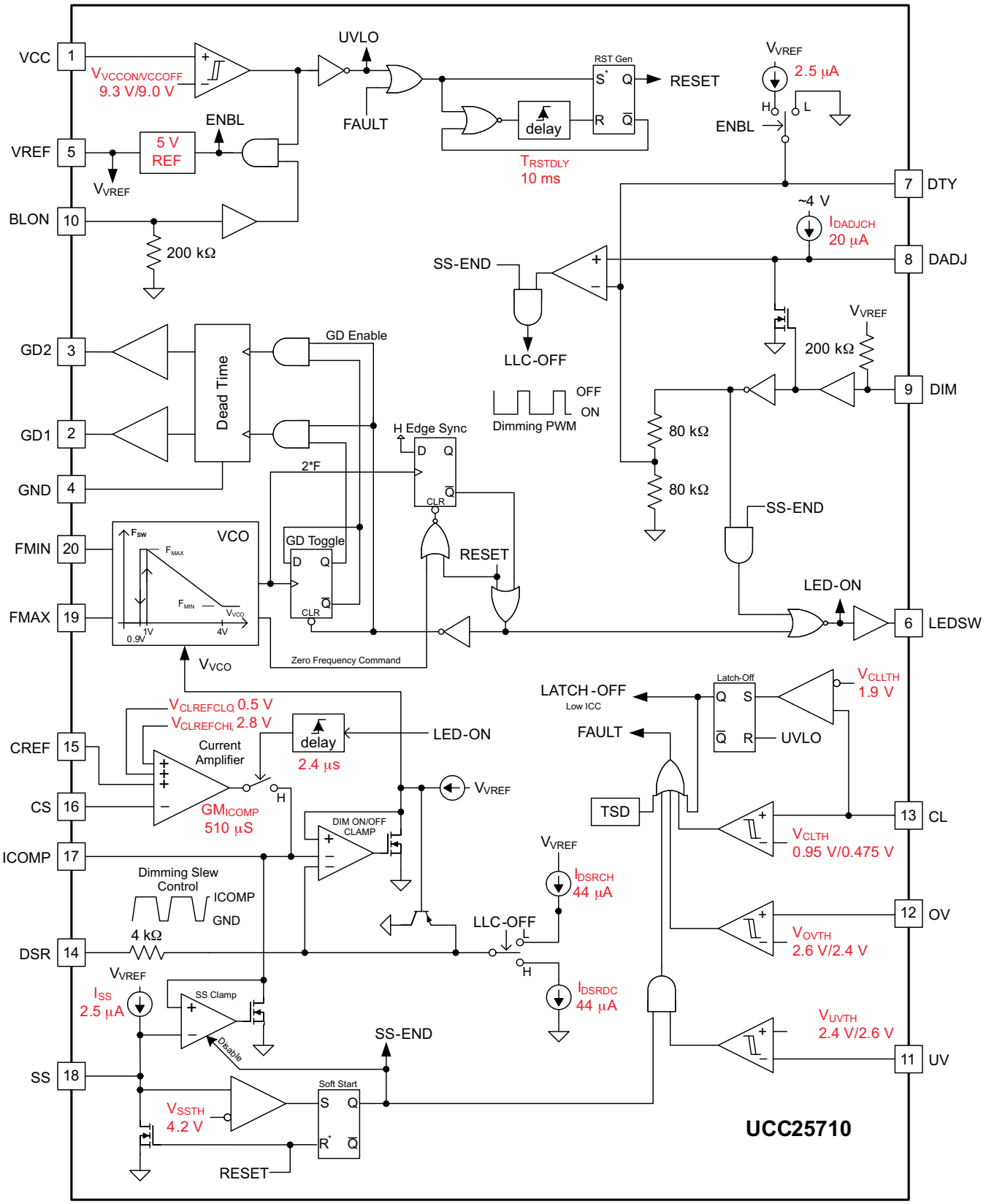

Copyright © 2011–2016, Texas Instruments Incorporated

8.3 Feature Description

Signal names and pin functions are depicted in *Functional Block Diagram*.

8.3.1 Multi-transformer Architecture

The multi-transformer LED driver architecture is a very attractive solution for driving multiple LED strings at the same current using a single power train and control device. Excellent LED string current matching from string to string (<1%) excellent LED current linearity from 1% to 100% dimming (<2%), and high efficiency can be achieved (>94%). Because this architecture is intended to use the 400-V output of the PFC stage, there is a significant cost advantage over typical LED backlight implementations because a power stage can be eliminated.

The architecture and UCC25710 control device are based on the LLC resonant half-bridge topology. The controller feedback loop is configured to regulate the total LED current typically with a current-sense resistor. The arrangement of the transformers with the primaries in series provides excellent LED string current matching. Because the primaries are in series, the current in each transformer primary is the same. The secondary current is the primary current times the turns ratio. The net primary magnetizing current is circulated in the primary side of the half bridge and does not affect the current transferred to the outputs. In each transformer, differences in magnetizing current caused by different magnetizing inductance or winding voltage will cause a difference in current transferred to the LED outputs, although the difference in transferred current is minimal with typical transformer tolerances and following the guidance in the *Determining Transformer and Resonant Circuit Parameters* below.

The UCC25710 includes all of the functions necessary to implement a total LED backlight driver including GM current amplifier, VCO, reference regulator, soft start, dimming duty cycle compensation and protection for OV, UV, current limit, and thermal shutdown. There are additional features to minimize audible noise during dimming and provide fast LED current rise and fall times.

8.3.2 Start-Up and Non-Dimming Operation

The UCC27510 is enabled when V_{CC} exceeds the V_{VCCON} threshold and BLON is high. At this time the soft-start cycle is initiated following a 10-ms reset delay. A 2.5-µA current source charges the capacitor connected to the SS pin to generate the soft-start ramp. During the soft-start cycle the current amplifier output (ICOMP) is clamped to be equal to or less than SS voltage. The voltage on ICOMP controls the VCO. V_{ICOMP} achieves the steady state operating point to regulate the total LED current during the soft-start rise time. The DIM input and the UV input are disabled during soft start to allow the output capacitors to charge to the steady-state operating voltage. When the SS pin reaches the V_{SSTH} threshold the SS-END signal transitions high indicating the end of the soft-start cycle. At this time the UV comparator and DIM input are enabled. See Figure 17 for the timing relationship during soft start.

Feature Description (continued)

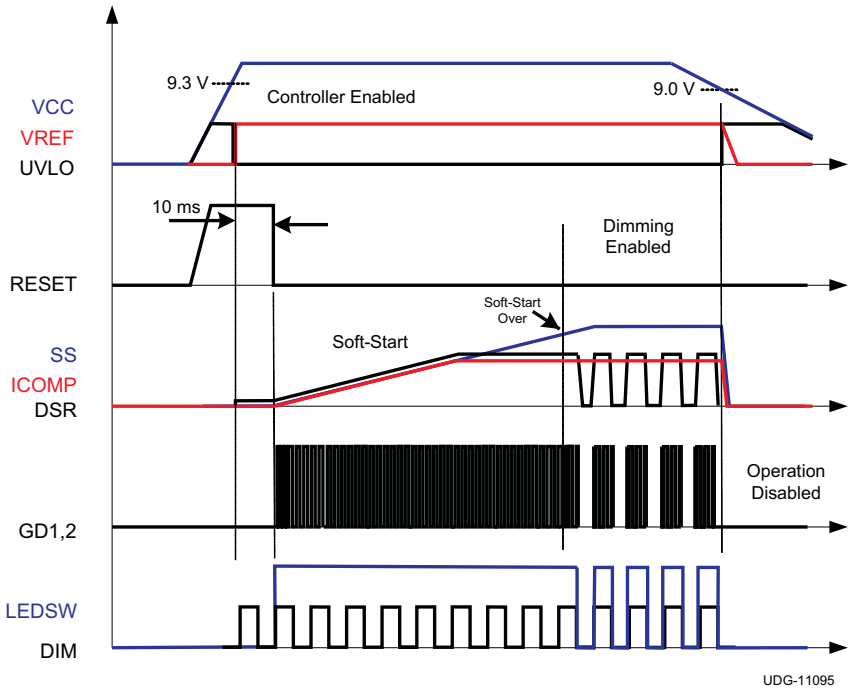

Figure 17. Start-Up Timing Diagram

8.3.3 Dimming Operation

Once the soft-start cycle is complete, the LEDSW output and control of the VCO depend on the DIM input. The dimming input signal controls the LEDSW output maintaining an accurate ON-time relationship between the DIM pulse width and LED current pulse width; the internal control signal is LED-ON. The LED-ON signal also controls a switch between the GM current amplifier output and the ICOMP pin. On the DIM rising edge the switch from the amplifier to the ICOMP pin is turned on after a 2.4-µs delay. The small delay time allows time to turn on the LED switch MOSFET. On the DIM falling edge the switch between the GM amplifier is turned off. During the DIM OFF-time the compensation capacitor at the ICOMP pin holds the correct steady-state operating voltage for the current loop. It is important that any DC loading of this pin is kept to an absolute minimum or current errors results as the dimming duty-cycle is reduced.

The LLC power stage is gated on and off during dimming with the dimming input signal. The UCC25710 allows control of the slew rate of the LLC power delivery at the rising and falling edges of a dim cycle allowing potentially audible electro-mechanically induced noise to be minimized. In addition, the falling, or turnoff, edge of a dimming cycle can be delayed, allowing the current loop to maintain control at low dimming duty-cycles even when the ramp rates have been slowed. See Figure 18.

Copyright © 2011–2016, Texas Instruments Incorporated

Feature Description (continued)

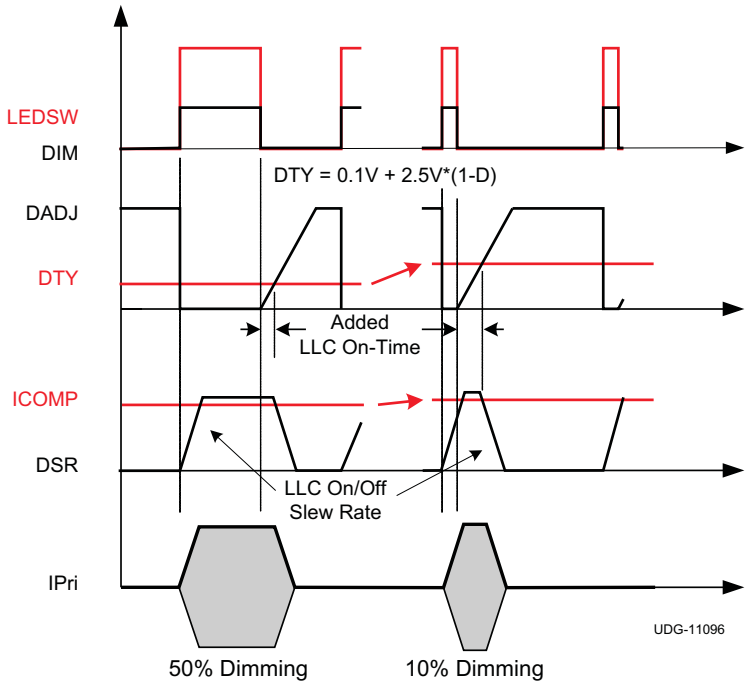

Figure 18. Dimming Timing Diagram

The power through the LLC converter is inversely proportional to the frequency of the VCO. The VCO frequency, in turn, is inversely proportional to the VCO control signal. See Figure 19 for details of this relationship. The dimming input generates an LLC-OFF signal that is used to select either a charging or discharging state for a capacitor applied to the DSR pin. The ±44 µA of current and associated capacitor set a ramp rate for the rise and fall of the DSR voltage. The control voltage to the VCO is dominated by the DSR voltage when the DSR voltage is less than the ICOMP pin – allowing the falling ramp on the DSR pin to softly turnoff the LLC power stage and softly return it to the same operating state as it rises.

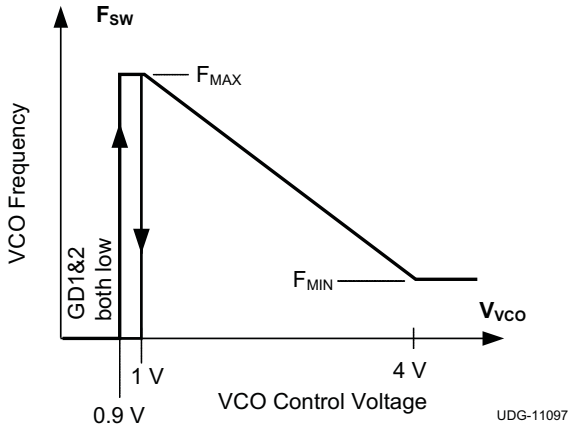

Figure 19. VCO Characteristics

The LLC-OFF signal is an inverted version of the dimming input signal. The falling edge of LLC-OFF is synchronized with the rising edge of the DIM signal. At a negative DIM edge the DADJ and DTY signals are combined to delay the rising edge of LLC-OFF providing a duty-cycle compensation time that is a function of the dimming duty cycle.

Feature Description (continued)

Averaged by a capacitor at the DTY pin, the voltage on DTY is inversely proportional to the dimming duty cycle; the voltage is

$$0.1\ V + 2.5\ V \times (1\text{-}D)$$

where

- D is the dimming PWM duty-cycle (1)

The DTY voltage range is 100 mV at 100% DIM duty-cycle, or LED current continuously on, to 2.6 V at 0% DIM duty cycle, or LED current continuously off. The DADJ pin 20-µA current source is allowed to charge the pin capacitor after a DIM falling edge. The LLC-OFF signal transitions high when the capacitor on DADJ charges to the voltage on DTY. See Figure 18 for the timing relationship during dimming. The scope plots in Figure 20 and Figure 21 below show an example LED driver at 10% and 50% DIM duty cycle.

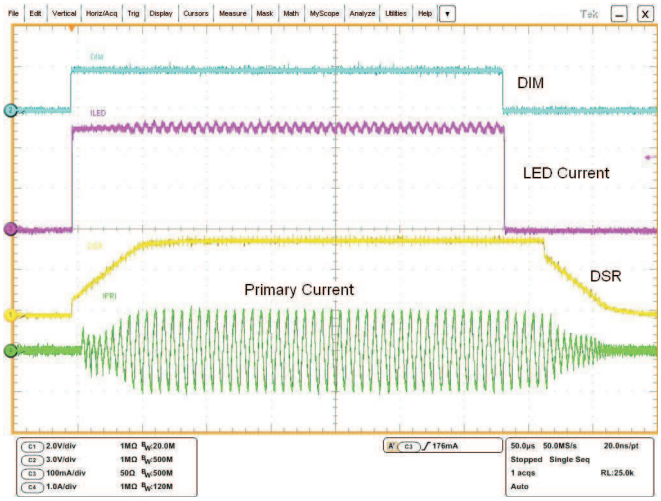

Figure 20. DIM 10% at 300 Hz

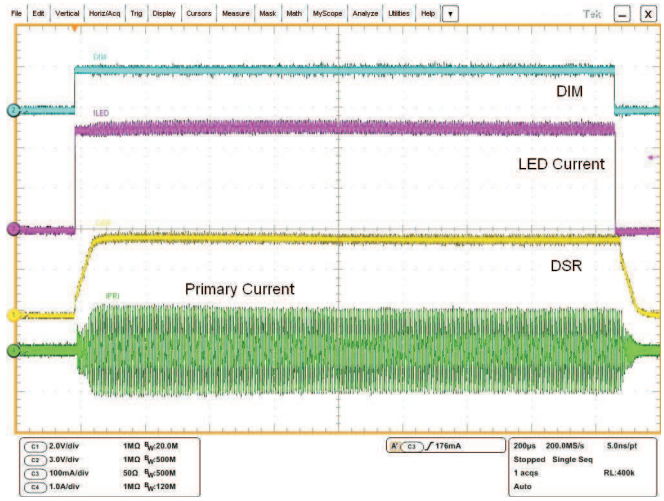

Figure 21. DIM 50% at 300 Hz

8.3.4 Fault Condition Operation

The UCC25710 has a similar response to overvoltage, thermal shutdown and current limit faults. Figure 22 shows the fault response. The OV input has a 2.6-V threshold and 240 mV of hysteresis. When OV is above 2.6 V the internal FAULT signal is active which results in the RESET signal going high. With RESET high the gate drivers are disabled, the SS pin is discharged to ground, and the LEDSW output is turned off. When OV is below 2.36 V the FAULT signal is inactive which starts the 10-ms SS clamp timer.

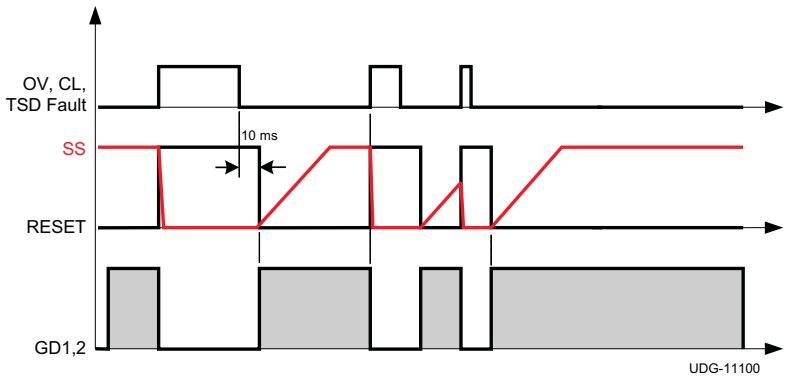

Figure 22. OV, CL(1 V) and TSD Fault Timing Diagram

Copyright © 2011–2016, Texas Instruments Incorporated

Feature Description (continued)

RESET is extended 10 ms beyond FAULT going low. After the 10-ms soft-start timer the normal soft-start sequence begins. Thermal shutdown generates the same internal FAULT signal when the internal temperature reaches 160°C and a restart sequence begins after the junction temperature drops by the 25°C of threshold hysteresis.

The current limit comparator has two thresholds. The lower threshold of 0.95 V results in a shutdown and restart as described for OVP, the OC pin has 0.475 V of hysteresis. The second current limit threshold of 1.9 V results in a latch-off fault. VCC must be recycled below the V_{CCOFF} threshold to reset the latched OC fault.

The undervoltage fault has a different response to allow the converter to charge the output capacitors in a normal start-up condition. Because UV is disabled during soft start, a sustained UV fault results in a 10-ms soft-start clamp time plus the time required for the SS pin to charge to V_{SSTH} which is 4.15 V. See Figure 23 for UV fault condition timing diagrams.

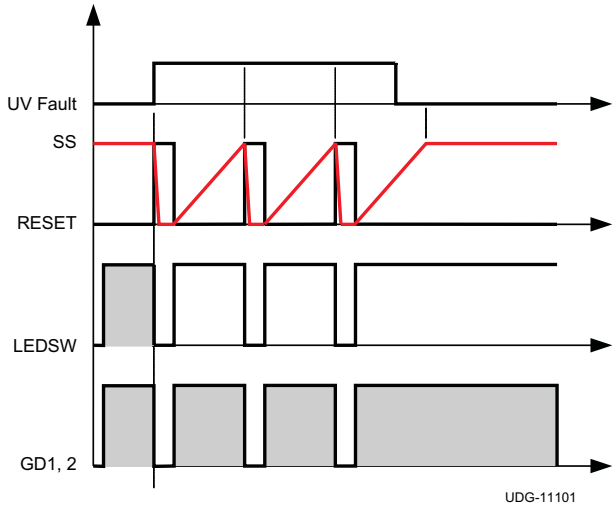

Figure 23. UV Fault Timing Diagram

8.4 Device Functional Modes

The device has two functional modes: non-dimming and dimming.

In the non-dimming mode the DIM input pin is held high (above 1.5 V typically)

In the dimming mode the DIM pin is switched between high and low levels.

The dimming slew rate controls the rate of change between the high and low LED currents.

This is set with a capacitor on the DSR input pin.

Additionally, a capacitor on the DADJ input pin extends the falling edges of the dimming cycle.

This allows for control at very low dimming ratios.

9 Application and Implementation

NOTE

Information in the following applications sections is not part of the TI component specification, and TI does not warrant its accuracy or completeness. TI's customers are responsible for determining suitability of components for their purposes. Customers should validate and test their design implementation to confirm system functionality.

9.1 Application Information

The UCC25710 offers a highly integrated solution for LLC control of LED lighting. To the part easier to use, TI has prepared an extensive set of materials to demonstrate the features of the device. The UCC25710 offers a highly integrated feature-set and excellent accuracy to control the LED current in highly efficient LLC type power supplies with dimming or without dimming requirements.

9.2 Typical Application

To take advantage of all the benefits integrated in this controller, the following procedure simplifies the setup to avoid unnecessary iterations in the design procedure. See Figure 24 setup for component names.

Copyright © 2011–2016, Texas Instruments Incorporated

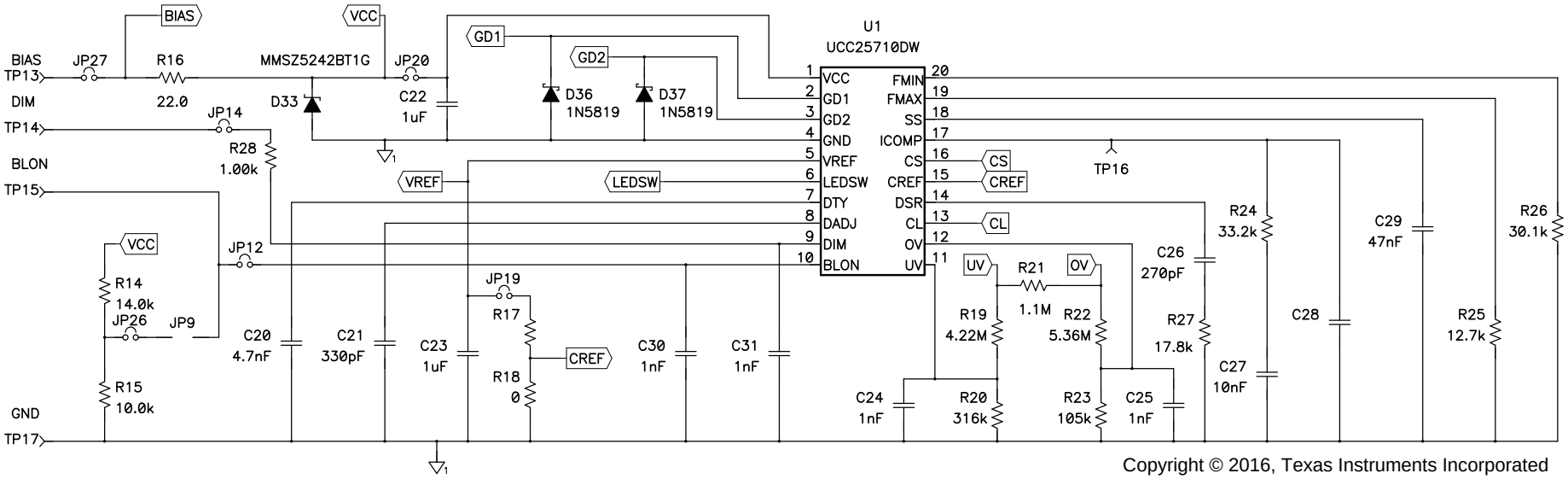

▲ Note parts with no value are populated

Figure 24. UCC25710 Controller Setup

9.2.1 Design Requirements

Table 1 lists the design parameters of this example.

Table 1. Design Parameters

PARAMETER		MIN	TYP	MAX	UNIT
INPUT CHARACTERISTICS					
V_{IN}	Input voltage	370	390	410	V
I_{IN}	Input current		0.275		A
OUTPUT1, OUTPUT2, OUTPUT3, OUTPUT 4 CHARACTERISTICS					
V_{LED1}, V_{LED2}, V_{LED3}, V_{LED4}	Output voltage set by LED load	96	98	100	V
I_{LED1}, I_{LED2}, I_{LED3}, I_{LED4}	Output current ripple			0.0125	A_{P-P}
I_{LED1}, I_{LED2}, I_{LED3}, I_{LED4}	Output current	0.245	0.25	0.255	A
I_{LED1}, I_{LED2}, I_{LED3}, I_{LED4}	Line regulation	0.245	0.25	0.255	A
I_{LED1}, I_{LED2}, I_{LED3}, I_{LED4}	Load regulation	0.245	0.25	0.255	A
V_{OVP}	Single output OVP		136		V
V_{UV}	Single output undervoltage		43		V
	Dimming range	1%		100%	
	Dimming frequency	270	300	330	Hz
	Current matching between strings (10% to 100% dimming)	–2%		2%	
	Output power single output			24.5	W
	Full output power				W
SYSTEM CHARACTERISTICS					
F_{SW}		84		156	kHz
η		91%	93%		

9.2.2 Detailed Design Procedure

9.2.2.1 Determining Transformer and Resonant Circuit Parameters

The muti-transformer architecture is similar to conventional LLC converter design with a few exceptions that are described in this section. Typical LLC voltage output converters are designed to operate nominally close to resonance and have the minimum switching frequency below resonance and maximum frequency above resonance. TI recommends operating above resonance at the nominal input voltage range of the converter to achieve good transient response during dimming and improved LED current matching. The transformer turns ratio equation shown is to target operation above resonance.

Use Equation 2 to calculate the turns ratio of the transformers in the multi-transformer architecture.

$$N = \frac{N_P}{N_S} = \frac{V_{IN}}{2 \times N_T \times V_{LED}} \tag{2}$$

where

- N is the primary to secondary turns ratio
- N_P is the primary turns
- N_S is the secondary turns
- V_{IN} is the input voltage to the LLC converter, typically the output of the PFC boost converter
- N_T is the number of transformers
- V_{LED} is the LED string voltage

Copyright © 2011–2016, Texas Instruments Incorporated

Another important consideration for the multi-transformer LED driver is to set the total magnetizing inductance of the transformers as high as possible to minimize the primary magnetizing current and it's effect on LED current matching. TI recommends targeting the total magnetizing inductance of the transformers to a value just low enough to achieve ZVS operation during nominal frequency operation. Equation 3 and Equation 4 determine the magnetizing inductance target. Reduce the calculated L_M to accommodate L_M and C_{OSS} tolerances.

$$I_{MPk} = \frac{2 \times C_{OSS} \times V_{IN}}{400\,ns} \tag{3}$$

$$L_m = \frac{V_{IN} \times \left(\frac{0.5}{F_{SW}} - 500\,ns\right)}{4 \times I_{MPk} \times N_T}$$

where

- I_{MPk} is the peak magnetizing current
- C_{OSS} is the MOSFET equivalent time related drain to source capacitance
- V_{IN} is the nominal input voltage to the half bridge, normally the PFC output voltage
- F_{SW} is the switching frequency at the regulation operating point
- L_M is the magnetizing inductance of each transformer
- N_T is the number of transformers with the primaries in series (4)

To use standard LLC converter design process and available tools such as SLUC253 design calculator available on the TI website, the multiple transformers and reflected loads can be combined into one equivalent transformer and load as shown in Figure 25. Once Lr and Lm are determined based on a single transformer circuit, simply divide by the number of transformers for each transformer specification target.

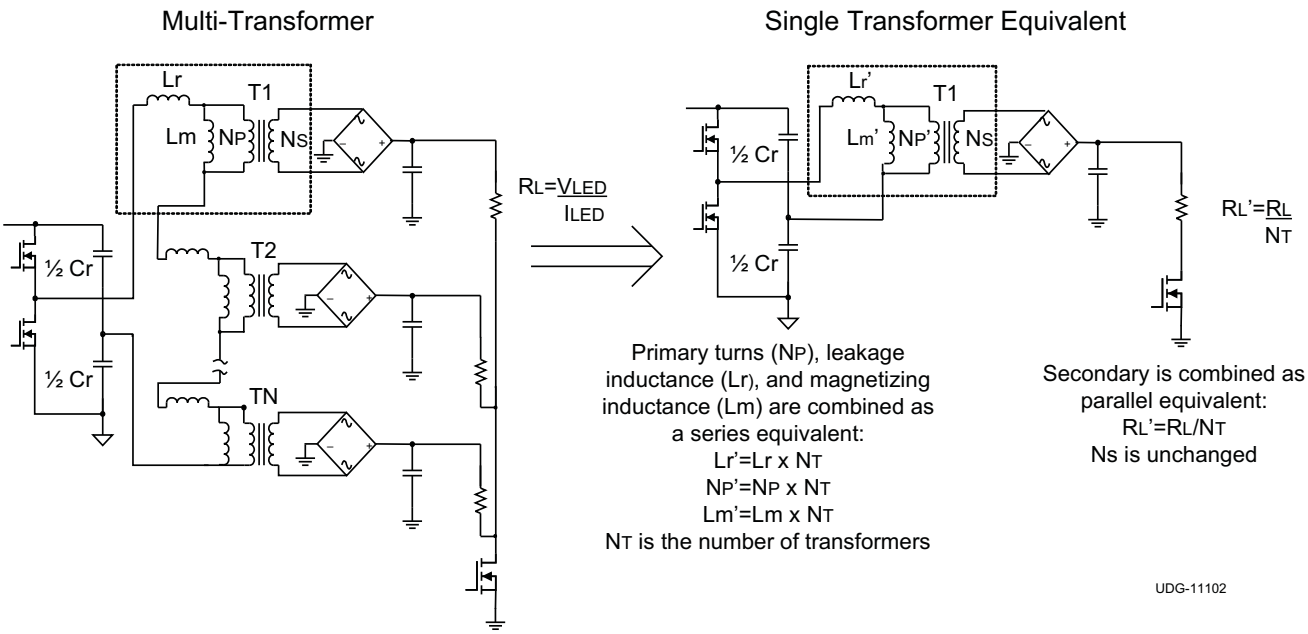

Figure 25. Multiple Transformers Combined With Reflected Loads

9.2.2.2 CS (Output Current Sense)

The CS pin is connected to the output current-sense resistor and is the feedback signal for the current amplifier. The regulation range is limited by the 0.5-V to 2.8-V internal current amplifier reference clamp. The LED current sense resistor value is determined by Equation 5.

$$R_{CS} = \frac{V_{CREF}}{I_{LEDTotal}}$$

where

- V_{CREF} is voltage on CREF pin determined by divider from VREF $I_{LEDTotal}$.
- $I_{LEDTOTAL}$ is the total LED string current during the DIM on time. (5)

9.2.2.3 ICOMP (Current Amplifier Compensation)

Connect a capacitor or series resistor capacitor combination to ground to compensate the 510-µS GM current amplifier control loop. The current amplifier is designed to maintain the steady-state operating voltage point of the current amplifier during dimming operation. This is accomplished by switching on and off the GM current amplifier to the ICOMP pin with the same control signal that controls the LEDSW output. The GM amplifier is disconnected from the ICOMP pin during the DIM OFF-time, and connected during the DIM ON-time. This feature is compromised if there is a leakage path on the ICOMP pin, such as resistance to ground. The re-connection of the ICOMP pin to the current amplifier output is delayed by about 2.4 µs to allow time for the external LED switch to be turned on prior to allowing the ICOMP pin voltage to be driven.

The optimum ICOMP capacitor value is determined based on desired LED current and primary current response during dimming. Because the LLC converter has a highly nonlinear transfer function, a gain phase analyzer is recommended to optimize the component values on ICOMP. The recommended bandwidth target is from 800 Hz to 5 kHz. The trade-off of too low bandwidth is increased line frequency ripple on the LED string current. The trade-off of high bandwidth is voltage variation on ICOMP during the DSR rise time which can result in primary current peaking during the start of the DIM period, this may result in audible noise if excessive. Either an integrator (capacitor to ground) or type II compensation (capacitor in parallel with resistor and series capacitor) is recommended.

9.2.2.4 SS (Soft Start)

Connect a capacitor to ground to program the desired soft-start time. When VCC exceeds the V_{CCON} threshold and BLON is high, a 2.5-µA current source charges the soft-start capacitor after a 10-ms delay. The voltage on SS dominates the VCO control voltage when lower than V_{ICOMP} or V_{DSR}. The device is in a soft-start condition until V_{SS} reaches the 4.2-V soft start over threshold. During the soft-start cycle DIM is disabled and the UV protection is disabled. The soft-start cycle is initiated by UVLO, BLON, OV fault clear, or UV fault clear after the soft-start cycle.

$$C_{SS} = \frac{2.5\ \mu A \times T_{SS}}{V_{ICOMP_REG} - 0.9\,V}$$

where

- T_{SS} is the target SS time.
- V_{ICOMP_REG} is the ICOMP voltage at the regulation point, which can be derived based on LLC switching frequency. (6)

9.2.2.5 FMAX (Maximum VCO Frequency)

Terminate FMAX to ground with a resistor to program the frequency delta from desired maximum to minimum operating frequency range. The recommended resistor value range is 4.22 kΩ to 53.6 kΩ. V_{ICOMP} which is the VCO control signal determines the voltage on FMAX; the programming resistor determines the voltage to current conversion ratio that programs the oscillator frequency at a given V_{ICOMP} voltage level. The device is designed to accommodate a maximum frequency of 350 kHz and a minimum frequency delta of 25 kHz. To provide controlled rise and fall time of the primary current during dimming, a maximum frequency of 2 to 3 times the nominal switching frequency is recommended as an initial value. The resistor value can be determined by Equation 7.

$$R_{MAX} = \frac{0.0664}{49.2\,pF \times F_{SW}(Delta)}$$

where

- $F_{SW}(Delta) = F_{SW(max)} - F_{SW(min)}$ (7)

9.2.2.6 FMIN (Minimum VCO Frequency)

Terminate FMIN to ground with a resistor to program the desired minimum operating frequency. The recommended resistor range is 9.53 kΩ to 102 kΩ. The device is designed to accommodate a minimum frequency of 30 KHz. The resistor value can be determined by Equation 8.

Copyright © 2011–2016, Texas Instruments Incorporated

$$R_{MIN} = \frac{0.15}{49.2pF \times F_{SW(min)}} \tag{8}$$

Use Equation 9 to determine F_{SW} for given V_{ICOMP}, R_{FMAX}, and R_{FMIN} values.

$$F_{SW} = \frac{\frac{0.15}{R_{MIN}} + \frac{(4V - V_{ICOMP})}{R_{MAX} \times 45.2V}}{49.2pF}$$

where from Equation 7 to Equation 9

- F_{SW} is in Hz, R is in Ω
- V_{ICOMP} is in V (9)

9.2.2.7 GD1 and GD2 (Gate Drive 1 and 2)

Connect the primary of the gate-drive transformer to GD1 and GD2 through a small series resistance. The high-side driver resistance is 12 Ω and low-side driver resistance is 4 Ω typical. The drivers are limited to 25-mA RMS maximum current, so there is a magnetizing current limitation of the gate-drive transformer shown in the Equation 10. If the magnetizing current exceeds 25 mA with the specified gate-drive transformer and nominal operating frequency, a simple NPN-PNP buffer on GD1 and GD2 may be required. The minimum gate drive transformer inductance can be determined from Equation 10.

$$L_{GD} = \frac{V_{CC}}{2 \times F_{SW} \times 87mA}$$

where

- L_{GD} is the gate drive transformer L_{PRI}
- F_{SW} is the nominal switching frequency
- V_{CC} is the V_{CC} supply voltage (10)

9.2.2.8 LEDSW (LED Switch Drive)

The LEDSW is the output to control the LED switch MOSFET in series with the LED string returns. The LEDSW is controlled by the DIM input during normal operation to provide LED string current pulse widths that corresponds to the DIM signal. During soft start, the LEDSW signal is high regardless of the DIM signal to allow the output capacitors to charge. The LEDSW is low during an OV, UV or CL fault to provide additional protection to the LED's. This output is 0 V to VCC but has limited drive current ability, a simple NPN or PNP buffer is required to drive the LED switch MOSFET. The LEDSW high resistance is 4 kΩ and low side is 2 kΩ, so avoid any DC load on this pin.

The turnon and turnoff delay of the LED switch MOSFET relative to DIM rising and falling edge must be well matched to achieve excellent LED current linearity especially at low DIM duty-cycles. As an example, consider a 1% dimming duty-cycle at dimming PWM frequency of 300 Hz where a delay mismatch of 667 ns represents a 2% linearity error. A gate-drive resistor and parallel resistor diode combination to drive the LED switch MOSFET can be used to match edge delays. Refer to Figure 26 for a recommended LED switch MOSFET drive circuit.

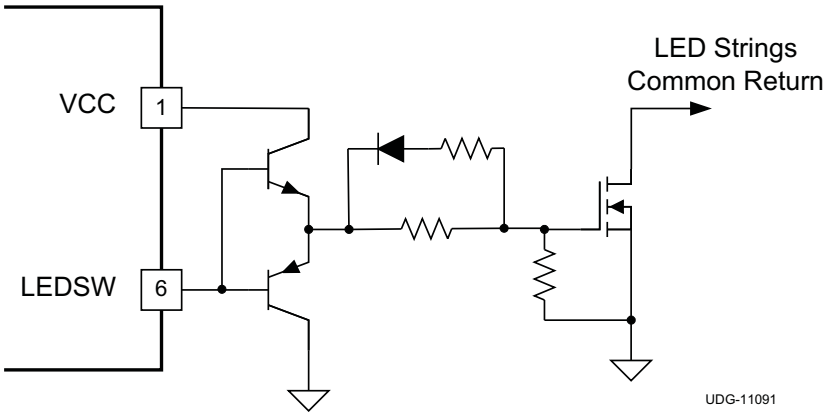

Figure 26. Recommended LED Switch MOSFET Drive Circuit

9.2.2.9 DSR (Dimming Slew Rate)

The DSR pin is used to control the rise and fall time of the VCO control voltage. The DSR capacitor value can be determined by Equation 11. The effective rise time of the LLC primary current is when VDSR is between the 0.9-V gate-drive enable voltage and the VICOMP operating point.

$$C_{DSR} = \frac{44\,\mu A \times T_{SLEW}}{V_{ICOMP_REG} - 0.9\,V}$$

where

- T_{SLEW} is the desired LLC current rise and fall time
- V_{ICOMP_REG} is the ICOMP voltage regulation point (11)

Because the DSR voltage starts at 0 V and the LLC gate-drive enable is typically 0.9 V, there is a delay from the DIM rising edge and LEDSW rising edge until the LLC gate drivers are enabled. An easy solution to eliminate a majority of the delay is to use a resistor in series with C_{DSR}. Because DSR is clamped at a Vbe above V_{ICOMP}, the recommended resistance is 15 kΩ to 17 kΩ to provide a 640-mV to 720-mV initial voltage delta.

9.2.2.10 DTY (Dimming Duty-Cycle Average)

The DTY pin generates a voltage inversely proportional to the DIM duty-cycle with a 100-mV offset. The voltage range is 100 mV to 2.6 V corresponding to 100% dimming and 0% dimming. This voltage is compared to the DADJ rising ramp to determine the dimming duty-cycle compensation delay time.

The capacitor value is selected to provide low ripple voltage at the DIM frequency. A good guideline is to target 100 V or less peak-to-peak ripple voltage. There is a trade-off of DTY capacitor value and response to DIM duty-cycle transients. For faster response time to significant changes in DIM duty-cycle select a lower value capacitance. Equation 12 can be used to select a DTY capacitor based on maximum ripple voltage and DIM frequency.

$$C_{DTY} = \frac{15.65\,\mu A}{V_{DTY(pp)} \times F_{DIM}}$$

where

- F_{DIM} is the dimming frequency
- $V_{DTY(pp)}$ is the maximum peak to peak ripple voltage. (12)

Equation 13 can be used to determine the average of V_{DTY} at any given DIM duty-cycle.

$$V_{DTY} = \left[\left(1 - D_{DIM}\right) \times 2.5\,V\right] + 0.1V$$

where D_{DIM} is the DIM duty-cycle. (13)

Copyright © 2011–2016, Texas Instruments Incorporated

9.2.2.11 DADJ (Dimming Duty-Cycle Adjust)

The DADJ pin is a 20-µA current source enabled at the DIM falling edge. The capacitor connected to this pin determines the slope of V_{DADJ}. LLC-OFF is the internal signal that controls the turnon and turnoff of the LLC power stage. The rising edge of LLC-OFF corresponds to a falling edge at the DIM input. The falling edge of the LLC-OFF signal is delayed until the rising edge of the DADJ voltage crosses the voltage on DTY. See *Dimming Operation* discussion for more details.

An initial value DADJ capacitor can be determined by Equation 14. The dimming performance at lowest DIM on time must be evaluated as described in the following paragraph.

$$C_{DADJ} = \frac{20\,\mu A \times \left(\sqrt{\frac{DIM_{DMIN} \times T_{RISE}}{F_{DIM}}} - \frac{DIM_{DMIN}}{F_{DIM}} \right)}{\left[(1 - DIM_{DMIN}) \times 2.5\,V \right] + 0.1V}$$

where

- DIM_{DMIN} is the minimum dimming duty cycle
- F_{DIM} is the dimming frequency
- T_{RISE} is the effective DSR rise time (14)

To ensure consistent LED current regulation during DIM duty-cycle transients, it is important to confirm that ICOMP achieves the steady-state operating voltage at the lowest DIM duty-cycle. Because DSR is clamped a V_{BE} (approximately 0.7 V) above ICOMP, this signal can be inspected to confirm a steady-state operating point is achieved after the programmed DSR rise time. Confirm that the DSR signal achieves a relatively flat voltage during the lowest DIM duty-cycle condition. Figure 27 and Figure 28 below are scope plots of 1% DIM duty-cycle where DSR reaches the steady-state operating point, and 0.5% DIM where DSR is still rising and ICOMP is open loop. If DSR is still rising during the lowest DIM duty cycle, increase the DADJ capacitor value until DSR achieves a relatively flat response as shown in Figure 27, the 1% DIM duty-cycle scope plot below.

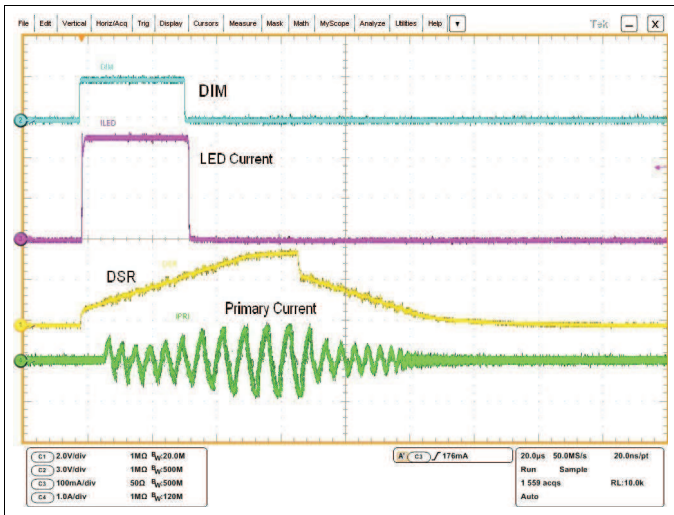

Figure 27. 1% DIM duty-cycle

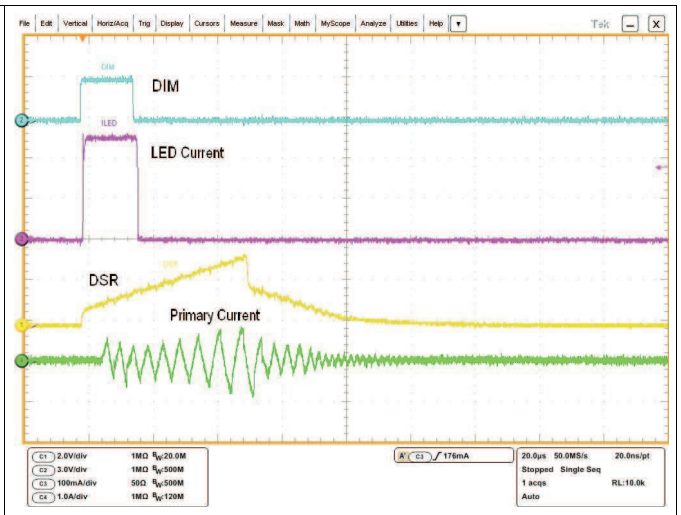

Figure 28. 0.5% DIM duty-cycle

9.2.2.12 OV (Output Overvoltage)

The OV pin is connected to an output-voltage sense resistor divider with oring diodes to all of the LED outputs. The OV threshold is 2.6 V with 240-mV hysteresis. During an OV fault the GD1 and GD2 gate drivers are disabled and the LEDSW goes low (off). When the OV fault clears, the soft-start cycle is initiated.

A configuration is shown in Figure 29 below that allows for summing of multiple LED string outputs into common UV and OV dividers. Consider the total resistance of the divider networks because the divider bias current is provided by the highest voltage LED string. Equation 15 and Equation 16 can be used to determine total divider resistance and each component values.

$$R_{OV1} = \frac{2 \times V_{OUT} \times 1.5}{I_{OUT} \times D_{MIN} \times I_{MATCH}}$$

where

- V_{OUT} is LED string voltage
- I_{OUT} is LED DC output current
- D_{MIN} is minimum dimming duty-cycle
- I_{MATCH} is LED current matching target
- OV and UV dividers are approximately equal resistance (15)

$$R_{OV2} = \frac{R_{OV1} \times 2.6\,V}{V_{OVLO} - 2.6\,V - V_D}$$

where

- V_{OVLO} is the OVP threshold
- V_D is the summing diode voltage drop (16)

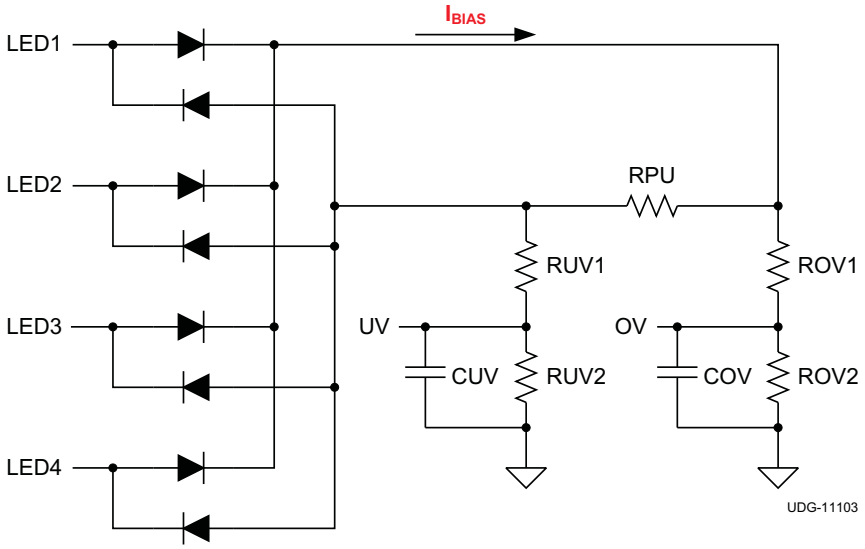

Figure 29. Application of Overvoltage and Undervoltage

9.2.2.13 UV (Output Undervoltage)

UV is connected to an output-voltage sample of the converter. The UV threshold is 2.4 V with 240-mV hysteresis. UV below 2.4 V is considered an undervoltage fault which disables the GD1 and GD2 gate drivers, LEDSW output goes low, the 10-ms soft-start clamp and soft-start cycle are initiated. The UV comparator is disabled until SS voltage is 4.2 V to allow the output capacitors to charge to the normal operating voltage during start-up of the converter.

See the OV and UV divider diagram above for a typical configuration that allows for summing of multiple LED string outputs into common UV and OV dividers. Consider the value of RPU to avoid a current path from the highest voltage LED string to the lowest voltage LED string. Equation 17, Equation 18, and Equation 19 assume a 2× V_{OUT} delta as the maximum UVLO voltage.

$$R_{PU} = \frac{R_{OV1}}{5}$$

where

- LED voltage total tolerance is ±5%

Copyright © 2011–2016, Texas Instruments Incorporated

- OV and UV dividers are approximately equal resistance (17)

$$R_{UV1} = R_{OV1} - R_{PU} \quad (18)$$

$$R_{UV2} = \frac{(R_{UV1} + R_{PU}) \times 2.4\,V}{V_{UVLO} - 2.4\,V - V_D}$$

where

- V_{UVLO} is the UVP threshold
- V_D is the summing diode voltage drop (19)

9.2.2.14 CL (Current Limit)

The CL pin is typically connected to the rectified and filtered output of a primary current sense transformer. There are two levels of current limit protection: restart and latching. When CL exceeds 0.95 V the gate drivers are disabled and LEDSW goes low, when the CL voltage reduces to 475 mV the soft-start cycle is initiated. If CL exceeds a 1.9-V threshold, the gate drivers are disabled and LEDSW goes low, this condition is latched until VCC is recycled below the UVLO threshold.

9.2.3 Application Curves

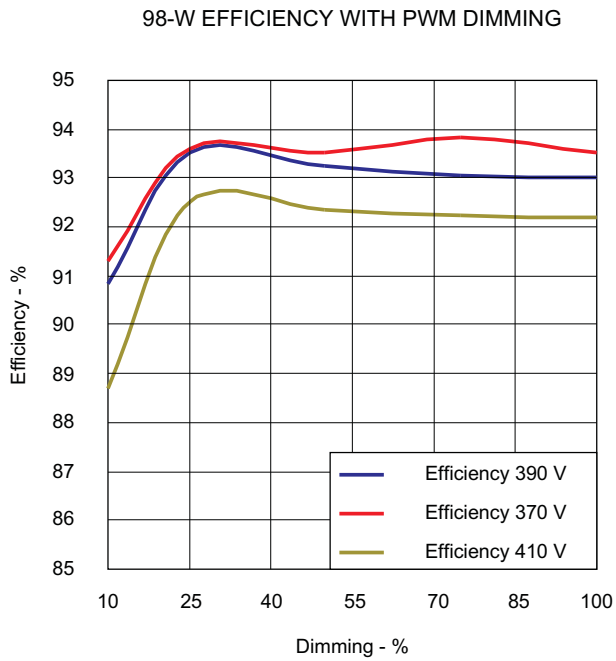

Figure 30. Efficiency 10% to 100% PWM Dimming

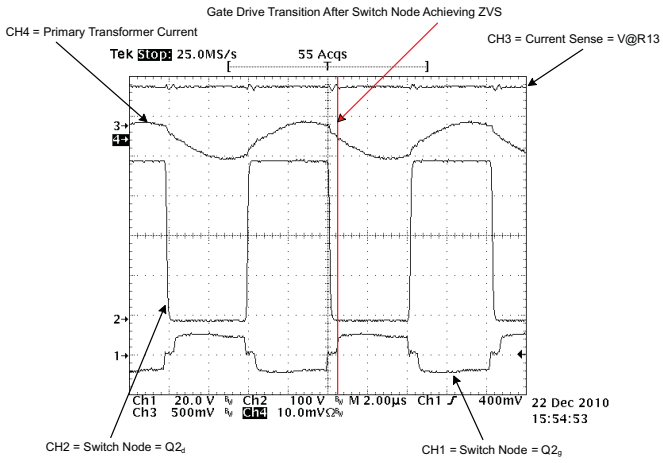

Figure 31. V_{IN} = 390 V, Outputs Loaded With 32, Cree XLamp CR-E , LEDs

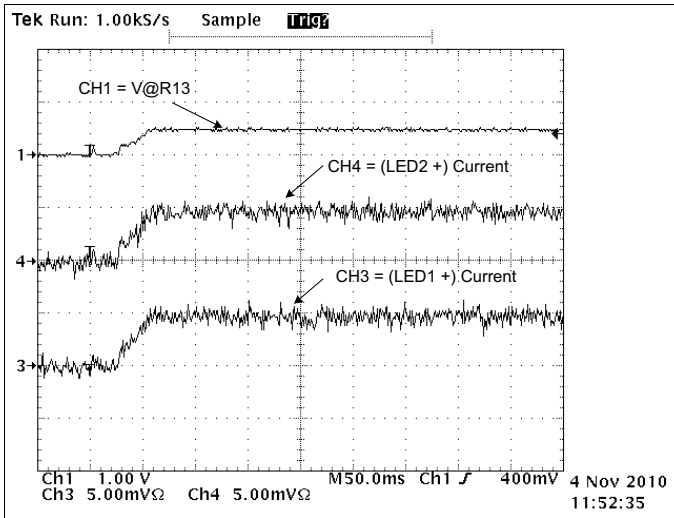

Figure 32. Current LED1 (CH3) and LED2 (CH4)

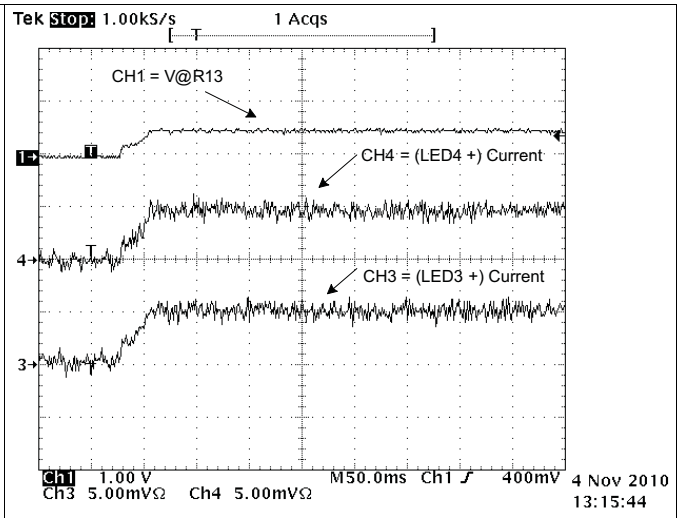

Figure 33. Current LED3 (CH3) and LED4 (CH4)

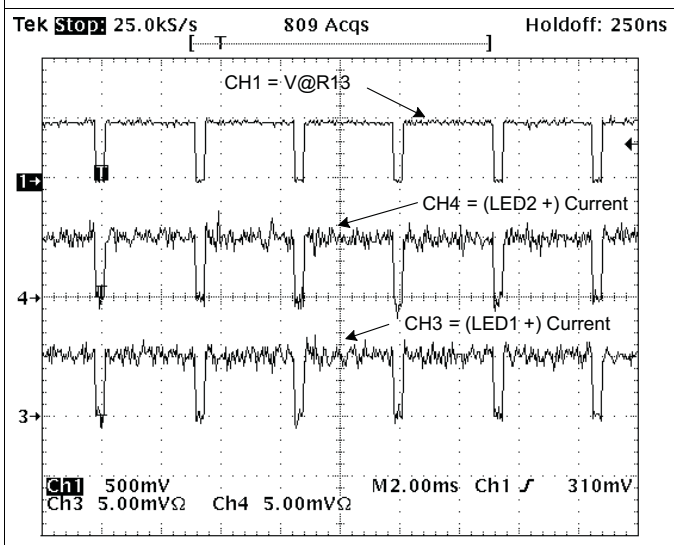

Figure 34. Current LED1 (CH3) and LED2 (CH4)

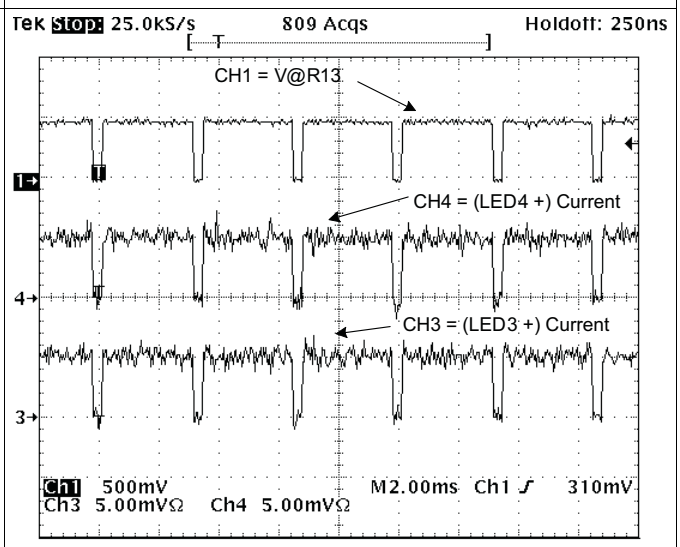

Figure 35. Current LED3 (CH3) and LED4 (CH4)

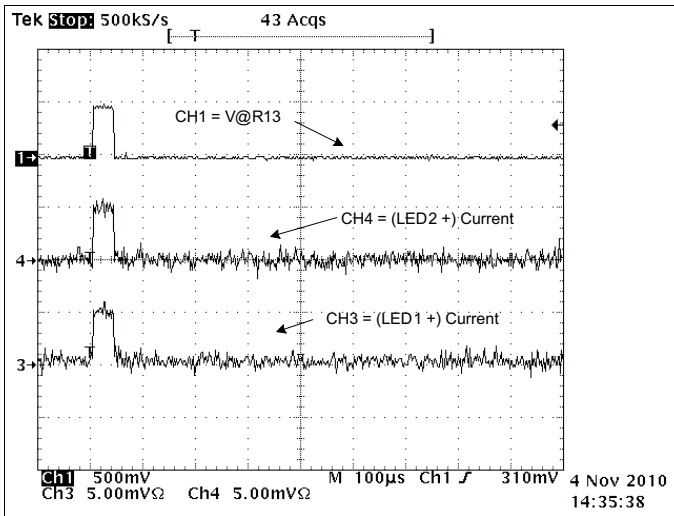

Figure 36. Current LED1 (CH3) and LED2 (CH4)

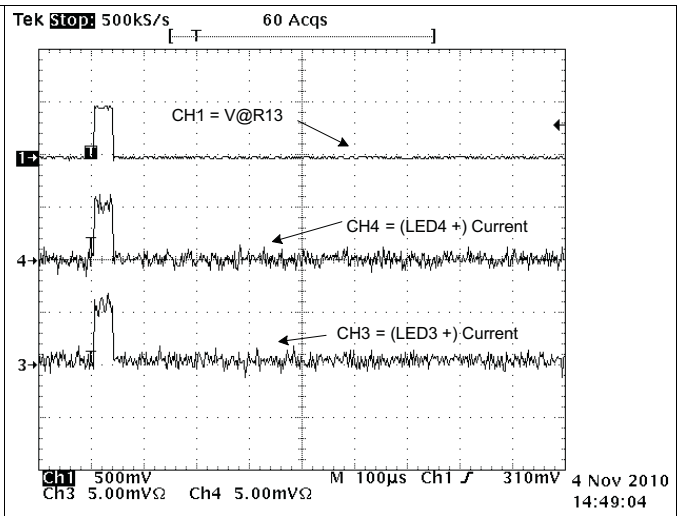

Figure 37. Current LED3 (CH3) and LED4 (CH4)

Copyright © 2011–2016, Texas Instruments Incorporated

10 Power Supply Recommendations

The UCC25710 is designed to operate from an external bias supply connected to the VCC input. It has an operating voltage range between 11 V and 18 V with an absolute maximum input voltage rating of 18 V.

In most applications, the high voltage input range of the LLC controller is normally set at about 370 V to 410 V with 390-V nominal. This narrow range of DC input voltage is a constraint of the LLC topology. Setting the maximum and minimum switching frequencies limits the regulation range to these input voltages.

11 Layout

11.1 Layout Guidelines

As with all PWM controllers, the effectiveness of the filter capacitors on the signal pins depends upon the integrity of the ground signal. Separating the high di/dt induced noise on the power ground from the low current quiet signal ground is required for adequate noise immunity. As shown Figure 38, the bypass capacitors on VCC and VREF have one end located in close proximity to their associated pins and the other ends are returned directly to the GND pin or to the portion of the ground plane associated with the low level GND signal and not to the high current power return. Low-ESR type ceramic capacitors are recommended as bypass capacitors.

The gate-drive output signals (GD1 and GD2) can cause interference on the low-level inputs (CL and CS) and for this reason must be routed as far as possible away from them and have short direct paths to the gate-drive transformer. In general any slow-changing analog signals must be routed away from high-speed digital signals.

Timing resistors FMIN and FMAX must be placed as close as possible to the pins on the UCC25710.

Copyright © 2011–2016, Texas Instruments Incorporated

11.2 Layout Example

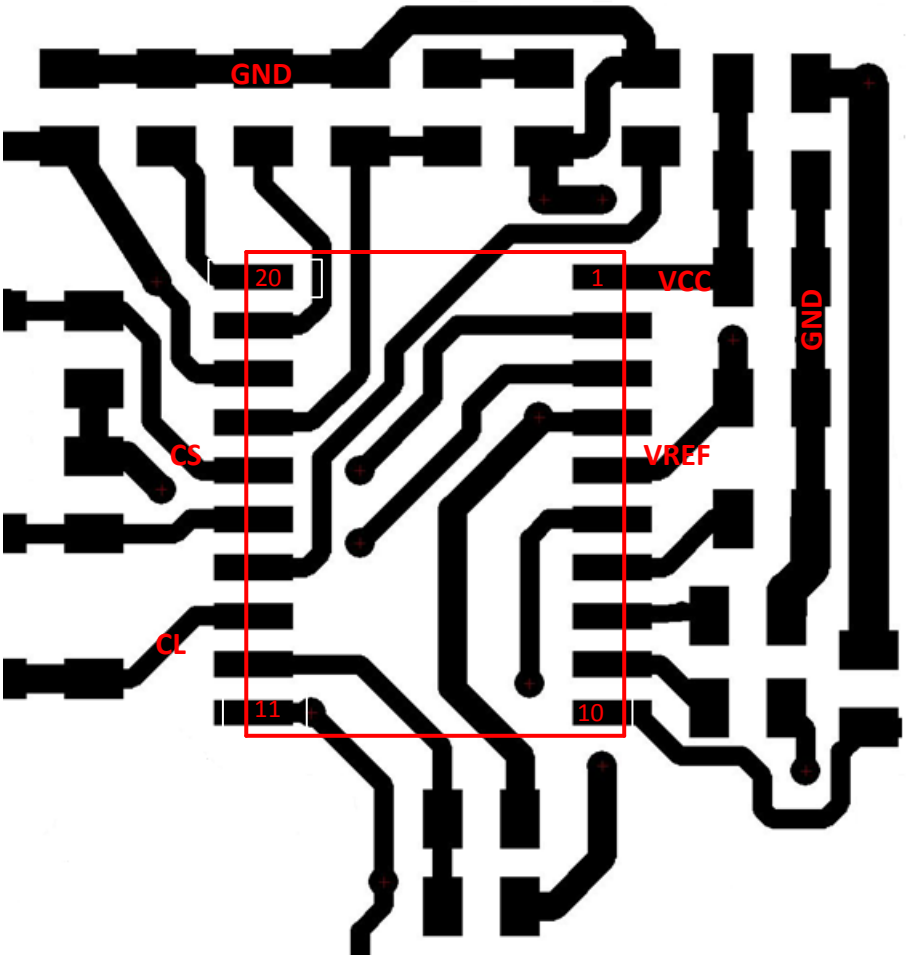

Figure 38. Layout Example for UCC25710

Copyright © 2011–2016, Texas Instruments Incorporated

12 Device and Documentation Support

12.1 Receiving Notification of Documentation Updates

To receive notification of documentation updates, navigate to the device product folder on ti.com. In the upper right corner, click on *Alert me* to register and receive a weekly digest of any product information that has changed. For change details, review the revision history included in any revised document.

12.2 Community Resource

The following links connect to TI community resources. Linked contents are provided "AS IS" by the respective contributors. They do not constitute TI specifications and do not necessarily reflect TI's views; see TI's Terms of Use.

TI E2E™ Online Community ***TI's Engineer-to-Engineer (E2E) Community.*** Created to foster collaboration among engineers. At e2e.ti.com, you can ask questions, share knowledge, explore ideas and help solve problems with fellow engineers.

Design Support ***TI's Design Support*** Quickly find helpful E2E forums along with design support tools and contact information for technical support.

12.3 Trademarks

E2E is a trademark of Texas Instruments.
All other trademarks are the property of their respective owners.

12.4 Electrostatic Discharge Caution

These devices have limited built-in ESD protection. The leads should be shorted together or the device placed in conductive foam during storage or handling to prevent electrostatic damage to the MOS gates.

12.5 Glossary

SLYZ022 — *TI Glossary*.

This glossary lists and explains terms, acronyms, and definitions.

13 Mechanical, Packaging, and Orderable Information

The following pages include mechanical, packaging, and orderable information. This information is the most current data available for the designated devices. This data is subject to change without notice and revision of this document. For browser-based versions of this data sheet, refer to the left-hand navigation.

PACKAGING INFORMATION

Orderable part number	Status (1)	Material type (2)	Package | Pins	Package qty | Carrier	RoHS (3)	Lead finish/ Ball material (4)	MSL rating/ Peak reflow (5)	Op temp (°C)	Part marking (6)
UCC25710DW	Active	Production	SOIC (DW) | 20	25 | TUBE	Yes	NIPDAU	Level-1-260C-UNLIM	-40 to 125	UCC25710
UCC25710DW.A	Active	Production	SOIC (DW) | 20	25 | TUBE	Yes	NIPDAU	Level-1-260C-UNLIM	-40 to 125	UCC25710
UCC25710DWR	Active	Production	SOIC (DW) | 20	2000 | LARGE T&R	Yes	NIPDAU	Level-1-260C-UNLIM	-40 to 125	UCC25710
UCC25710DWR.A	Active	Production	SOIC (DW) | 20	2000 | LARGE T&R	Yes	NIPDAU	Level-1-260C-UNLIM	-40 to 125	UCC25710

(1) **Status:** For more details on status, see our product life cycle.

(2) **Material type:** When designated, preproduction parts are prototypes/experimental devices, and are not yet approved or released for full production. Testing and final process, including without limitation quality assurance, reliability performance testing, and/or process qualification, may not yet be complete, and this item is subject to further changes or possible discontinuation. If available for ordering, purchases will be subject to an additional waiver at checkout, and are intended for early internal evaluation purposes only. These items are sold without warranties of any kind.

(3) **RoHS values:** Yes, No, RoHS Exempt. See the TI RoHS Statement for additional information and value definition.

(4) **Lead finish/Ball material:** Parts may have multiple material finish options. Finish options are separated by a vertical ruled line. Lead finish/Ball material values may wrap to two lines if the finish value exceeds the maximum column width.

(5) **MSL rating/Peak reflow:** The moisture sensitivity level ratings and peak solder (reflow) temperatures. In the event that a part has multiple moisture sensitivity ratings, only the lowest level per JEDEC standards is shown. Refer to the shipping label for the actual reflow temperature that will be used to mount the part to the printed circuit board.

(6) **Part marking:** There may be an additional marking, which relates to the logo, the lot trace code information, or the environmental category of the part.

Multiple part markings will be inside parentheses. Only one part marking contained in parentheses and separated by a "~" will appear on a part. If a line is indented then it is a continuation of the previous line and the two combined represent the entire part marking for that device.

Important Information and Disclaimer: The information provided on this page represents TI's knowledge and belief as of the date that it is provided. TI bases its knowledge and belief on information provided by third parties, and makes no representation or warranty as to the accuracy of such information. Efforts are underway to better integrate information from third parties. TI has taken and continues to take reasonable steps to provide representative and accurate information but may not have conducted destructive testing or chemical analysis on incoming materials and chemicals. TI and TI suppliers consider certain information to be proprietary, and thus CAS numbers and other limited information may not be available for release.

In no event shall TI's liability arising out of such information exceed the total purchase price of the TI part(s) at issue in this document sold by TI to Customer on an annual basis.

TAPE AND REEL INFORMATION

REEL DIMENSIONS

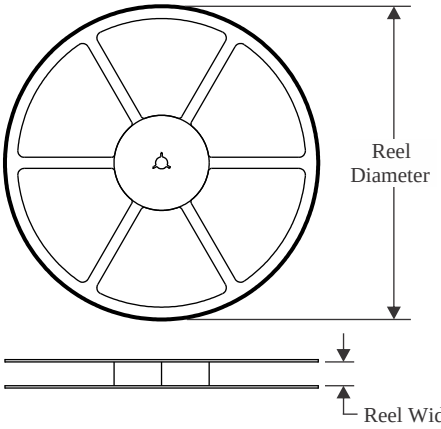

TAPE DIMENSIONS

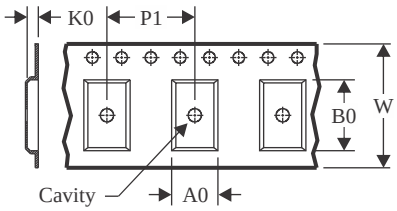

A0	Dimension designed to accommodate the component width
B0	Dimension designed to accommodate the component length
K0	Dimension designed to accommodate the component thickness
W	Overall width of the carrier tape
P1	Pitch between successive cavity centers

QUADRANT ASSIGNMENTS FOR PIN 1 ORIENTATION IN TAPE

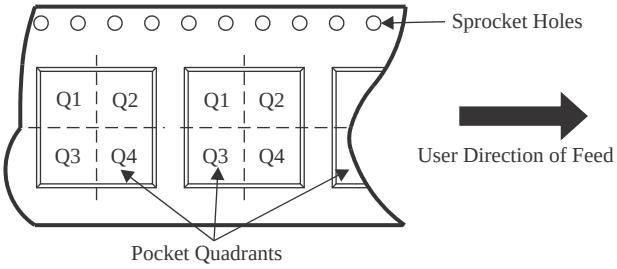

*All dimensions are nominal

Device	Package Type	Package Drawing	Pins	SPQ	Reel Diameter (mm)	Reel Width W1 (mm)	A0 (mm)	B0 (mm)	K0 (mm)	P1 (mm)	W (mm)	Pin1 Quadrant
UCC25710DWR	SOIC	DW	20	2000	330.0	24.4	10.8	13.3	2.7	12.0	24.0	Q1

TAPE AND REEL BOX DIMENSIONS

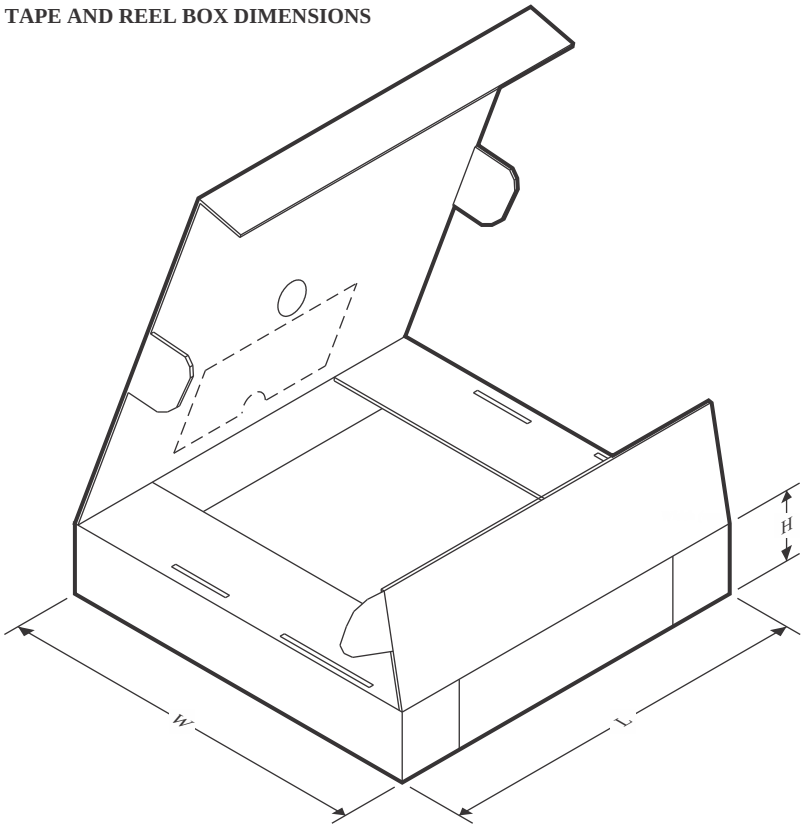

*All dimensions are nominal

Device	Package Type	Package Drawing	Pins	SPQ	Length (mm)	Width (mm)	Height (mm)
UCC25710DWR	SOIC	DW	20	2000	350.0	350.0	43.0

TUBE

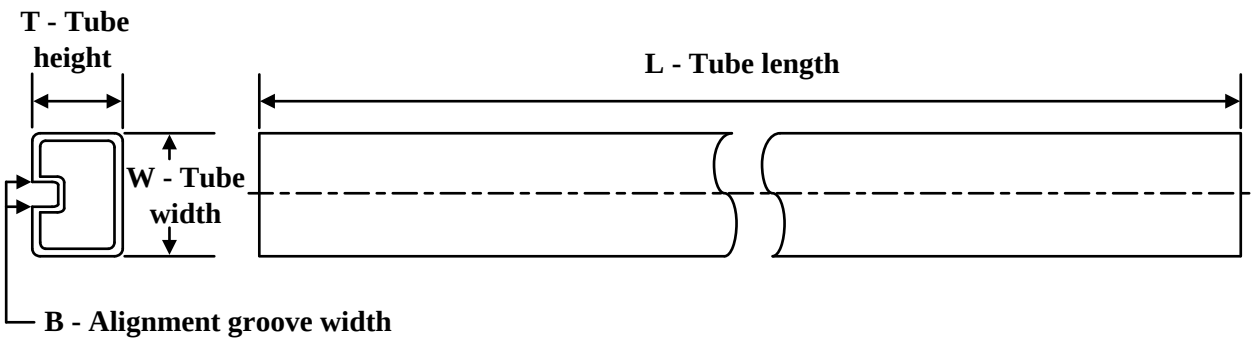

*All dimensions are nominal

Device	Package Name	Package Type	Pins	SPQ	L (mm)	W (mm)	T (µm)	B (mm)
UCC25710DW	DW	SOIC	20	25	506.98	12.7	4826	6.6
UCC25710DW.A	DW	SOIC	20	25	506.98	12.7	4826	6.6

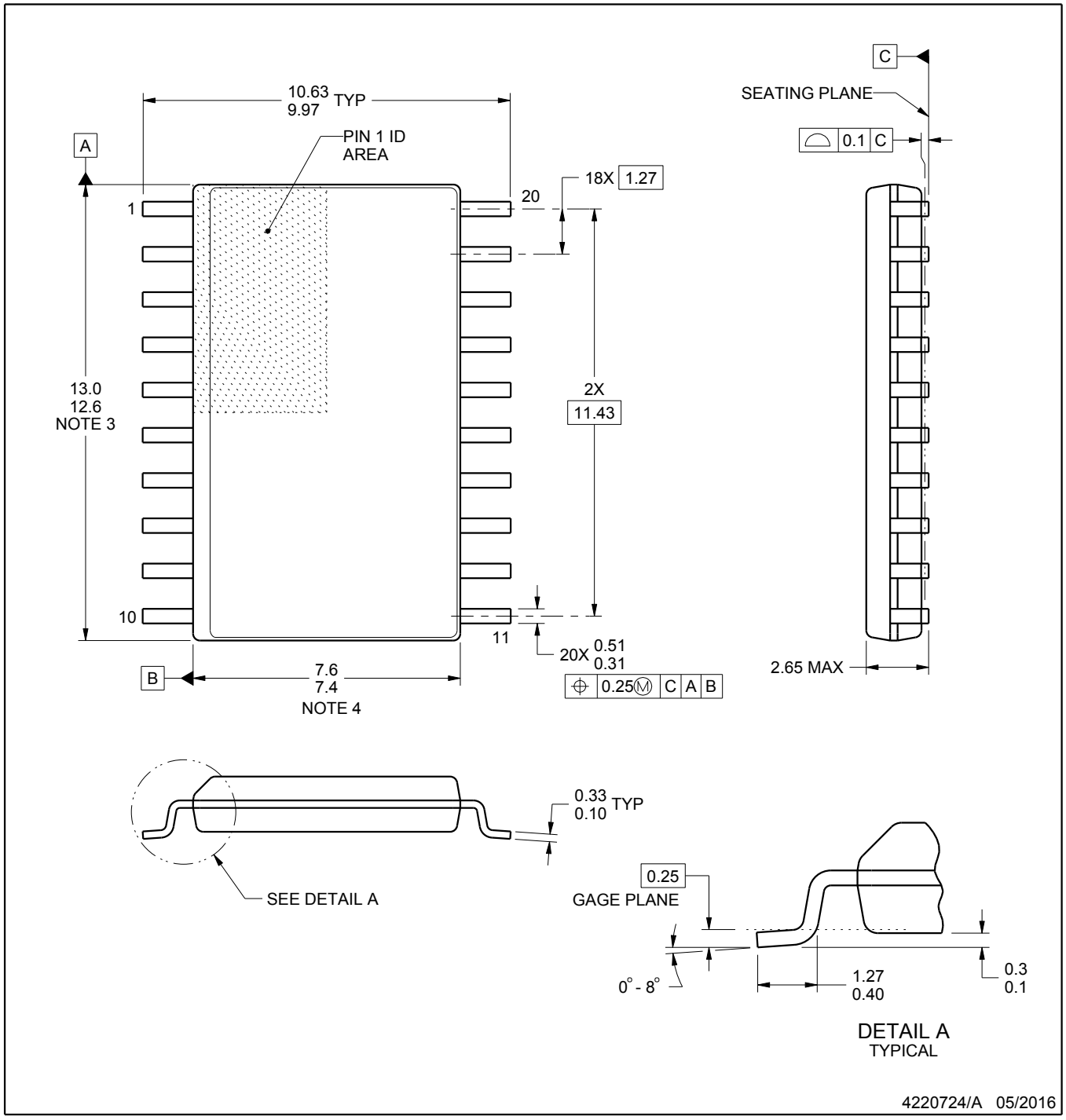

NOTES:

1. All linear dimensions are in millimeters. Dimensions in parenthesis are for reference only. Dimensioning and tolerancing per ASME Y14.5M.
2. This drawing is subject to change without notice.
3. This dimension does not include mold flash, protrusions, or gate burrs. Mold flash, protrusions, or gate burrs shall not exceed 0.15 mm per side.
4. This dimension does not include interlead flash. Interlead flash shall not exceed 0.43 mm per side.
5. Reference JEDEC registration MS-013.

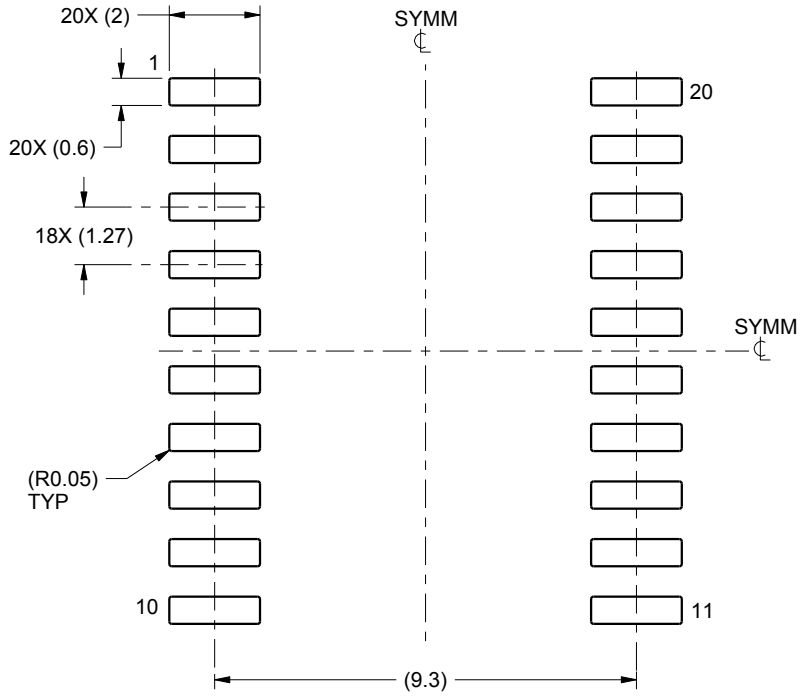

LAND PATTERN EXAMPLE
SCALE:6X

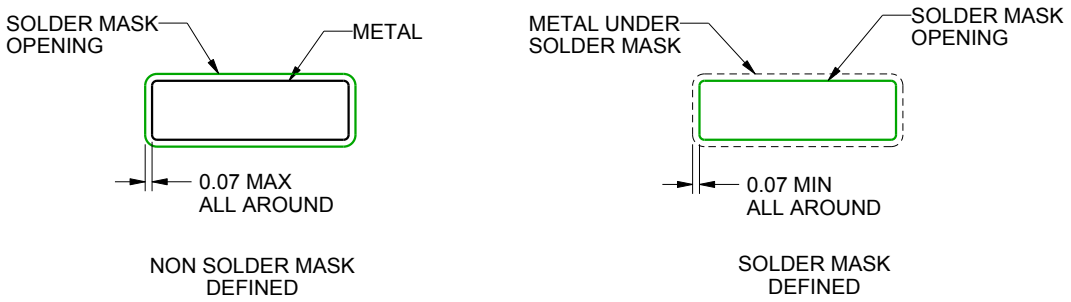

SOLDER MASK DETAILS

4220724/A 05/2016

NOTES: (continued)

6. Publication IPC-7351 may have alternate designs.
7. Solder mask tolerances between and around signal pads can vary based on board fabrication site.

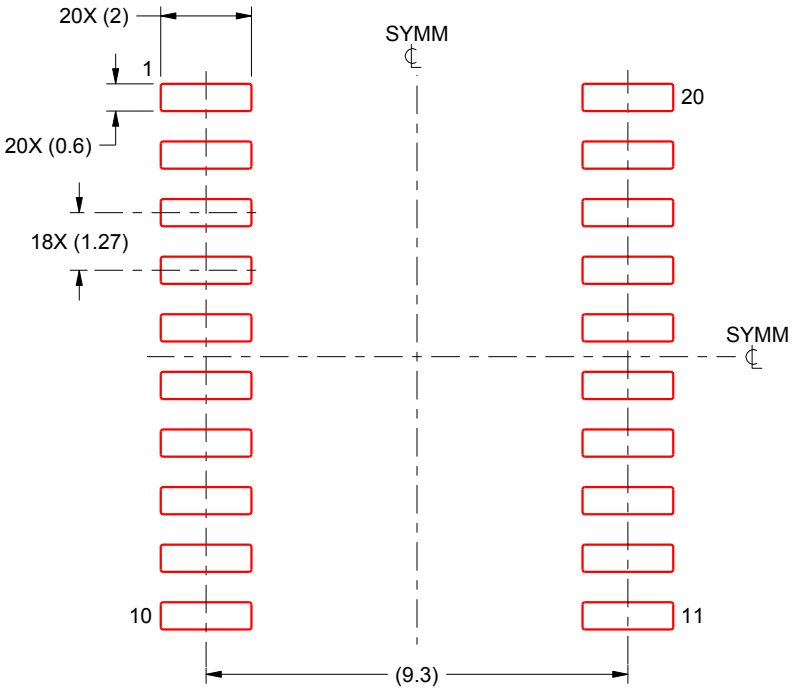

SOLDER PASTE EXAMPLE
BASED ON 0.125 mm THICK STENCIL
SCALE:6X

4220724/A 05/2016

NOTES: (continued)

8. Laser cutting apertures with trapezoidal walls and rounded corners may offer better paste release. IPC-7525 may have alternate design recommendations.
9. Board assembly site may have different recommendations for stencil design.

IMPORTANT NOTICE AND DISCLAIMER

TI PROVIDES TECHNICAL AND RELIABILITY DATA (INCLUDING DATA SHEETS), DESIGN RESOURCES (INCLUDING REFERENCE DESIGNS), APPLICATION OR OTHER DESIGN ADVICE, WEB TOOLS, SAFETY INFORMATION, AND OTHER RESOURCES “AS IS” AND WITH ALL FAULTS, AND DISCLAIMS ALL WARRANTIES, EXPRESS AND IMPLIED, INCLUDING WITHOUT LIMITATION ANY IMPLIED WARRANTIES OF MERCHANTABILITY, FITNESS FOR A PARTICULAR PURPOSE OR NON-INFRINGEMENT OF THIRD PARTY INTELLECTUAL PROPERTY RIGHTS.

These resources are intended for skilled developers designing with TI products. You are solely responsible for (1) selecting the appropriate TI products for your application, (2) designing, validating and testing your application, and (3) ensuring your application meets applicable standards, and any other safety, security, regulatory or other requirements.

These resources are subject to change without notice. TI grants you permission to use these resources only for development of an application that uses the TI products described in the resource. Other reproduction and display of these resources is prohibited. No license is granted to any other TI intellectual property right or to any third party intellectual property right. TI disclaims responsibility for, and you will fully indemnify TI and its representatives against, any claims, damages, costs, losses, and liabilities arising out of your use of these resources.

TI’s products are provided subject to TI’s Terms of Sale or other applicable terms available either on ti.com or provided in conjunction with such TI products. TI’s provision of these resources does not expand or otherwise alter TI’s applicable warranties or warranty disclaimers for TI products.

TI objects to and rejects any additional or different terms you may have proposed.

Mailing Address: Texas Instruments, Post Office Box 655303, Dallas, Texas 75265
Copyright © 2025, Texas Instruments Incorporated