bq2408x-Q1 1-A, Single Chip, Li-Ion and Li-Pol Automotive Charger

1 Features

- Integrated Power FET and Current Sensor for Up to 1-A Charge Applications From AC Adapter
- Precharge Conditioning With Safety Timer
- Charge and Power-Good Status Output
- Automatic Sleep Mode for Low Power Consumption
- Integrated Charge-Current Monitor
- Fixed 7-Hour Fast Charge Safety Timer
- Ideal for Low-Dropout Charger Designs for Single-Cell Li-Ion or Li-Pol Packs in Space-Limited Portable Applications
- Small 3-mm × 3-mm SON Package

2 Applications

- Linear Chargers for Automotive
- E-Call/ Back Up Call battery
- Automotive Infotainment
- Key FOB in Automotive

3 Description

The bq24080-Q1 and bq24081-Q1 are highly integrated and flexible Li-Ion linear charge devices targeted at space-limited charger applications. They offer an integrated power FET and current sensor, high-accuracy current and voltage regulation, charge status, and charge termination, in a single monolithic device. An external resistor sets the magnitude of the charge current.

The device charges the battery in three phases: conditioning, constant current, and constant voltage. Charge is terminated based on minimum current. An internal charge timer provides a backup safety for charge termination. The device automatically restarts the charge if the battery voltage falls below an internal threshold. The device automatically enters sleep mode when the ac adapter is removed.

Device Information(1)

PART NUMBER	PACKAGE	BODY SIZE (NOM)
bq24080-Q1(2)	VSON (10)	3.00 mm x 3.00 mm
bq24081-Q1		

(1) For all available packages, see the orderable addendum at the end of the datasheet.

(2) Product Preview

Simplified Schematic

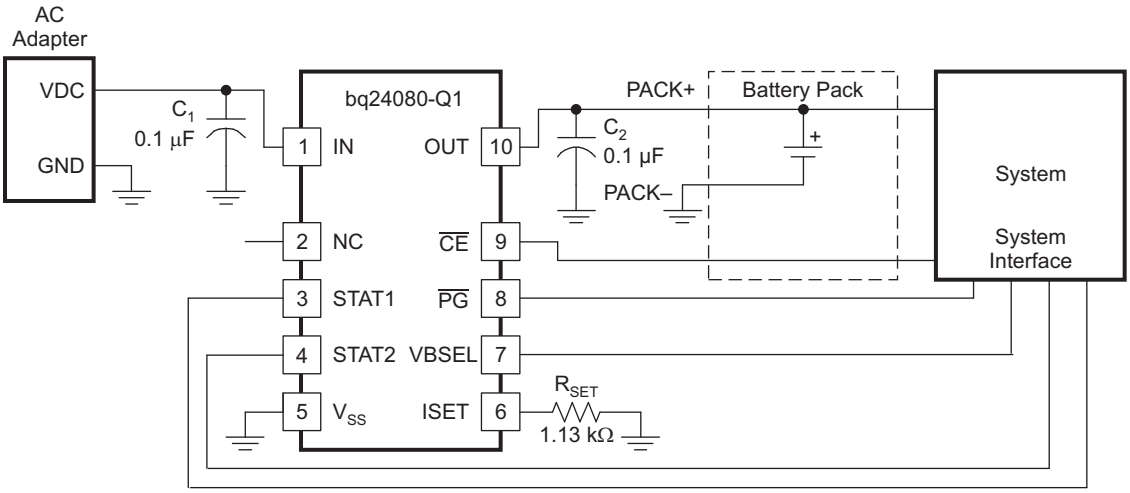

Copyright © 2016, Texas Instruments Incorporated

An IMPORTANT NOTICE at the end of this data sheet addresses availability, warranty, changes, use in safety-critical applications, intellectual property matters and other important disclaimers. UNLESS OTHERWISE NOTED, this document contains PRODUCTION DATA.

Table of Contents

1 **Features** ... 1
2 **Applications** ... 1
3 **Description** ... 1
4 **Revision History** ... 2
5 **Pin Configuration and Functions** ... 3
6 **Specifications** ... 4
6.1 Absolute Maximum Ratings ... 4
6.2 ESD Ratings ... 4
6.3 Recommended Operating Conditions ... 4
6.4 Thermal Information ... 4
6.5 Electrical Characteristics ... 5
6.6 Timing Requirements ... 6
6.7 Typical Characteristics ... 7
7 **Detailed Description** ... 8
7.1 Overview ... 8
7.2 Functional Block Diagram ... 10
7.3 Feature Description ... 11
7.4 Device Functional Modes ... 14
8 **Application and Implementation** ... 15
8.1 Application Information ... 15
8.2 Typical Application ... 15
9 **Power Supply Recommendations** ... 17
10 **Layout** ... 18
10.1 Layout Guidelines ... 18
10.2 Layout Example ... 18
10.3 Thermal Considerations ... 19
11 **Device and Documentation Support** ... 20
11.1 Device Support ... 20
11.2 Documentation Support ... 20
11.3 Related Links ... 20
11.4 Receiving Notification of Documentation Updates 20
11.5 Community Resources ... 20
11.6 Trademarks ... 20
11.7 Electrostatic Discharge Caution ... 20
11.8 Glossary ... 20
12 **Mechanical, Packaging, and Orderable Information** ... 20

4 Revision History

Changes from Revision A (August 2016) to Revision B — **Page**

- Changed the $R_{\theta JC(top)}$ value From: 5034 °C/W To: 50.4 °C/W in the *Thermal Information* table ... 4

Changes from Original (May 2016) to Revision A — **Page**

- *Recommended Operating Conditions*, Changed The T_J MIN value From: 0 To: –40°C ... 4
- *Electrical Characteristics*, Changed the conditions statement From: 0°C ≤ T_J ≤ 125°C To: –40°C ≤ T_J ≤ 125°C ... 5

Copyright © 2015–2017, Texas Instruments Incorporated

5 Pin Configuration and Functions

bq24080-Q1 DRC Package
10 Pin VSON
Top View

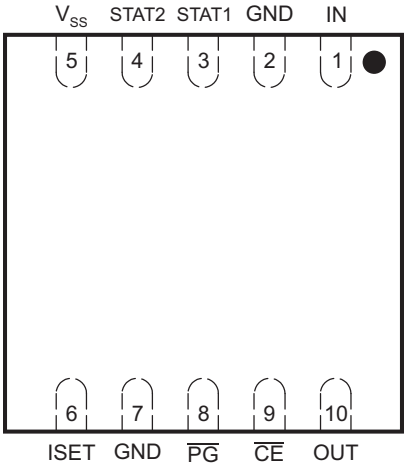

bq24081-Q1 DRC Package
10 Pin VSON
Top View

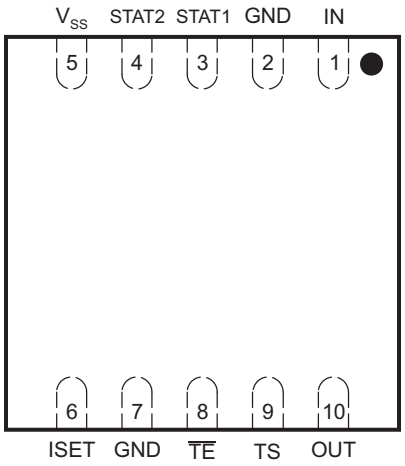

Pin Functions

PIN			I/O	DESCRIPTION
NAME	NO.			
	bq24080-Q1	bq24081-Q1		
$\overline{CE}$	9	–	I	Charge enable input (active-low)
GND	2, 7	2, 7	–	Ground
IN	1	1	I	Adapter dc voltage. Connect minimum 0.1-µF capacitor to V_{SS}.
ISET	6	6	I	Charge current. External resistor to V_{SS} sets precharge and fast-charge current, and also the termination current value. Can be used to monitor the charge current.
OUT	10	10	O	Charge current output. Connect minimum 0.1-µF capacitor to V_{SS}.
$\overline{PG}$	8	–	O	Power-good status output (open-drain)
STAT1	3	3	O	Charge status outputs (open-drain)
STAT2	4	4	O	
$\overline{TE}$	–	8	I	Timer-enable input (active-low)
TS	–	9	I/O	Temperature sense; connect to NTC in battery pack.
V_{SS}	5	5	–	Ground
Thermal pad	–	–	–	There is an internal electrical connection between the exposed thermal pad and the VSS pin of the device. The exposed thermal pad must be connected to the same potential as the V_{SS} pin on the printed-circuit board. ***Do not use the thermal pad as the primary ground input for the device***. The V_{SS} pin must be connected to ground at all times.

Copyright © 2015–2017, Texas Instruments Incorporated

6 Specifications

6.1 Absolute Maximum Ratings

over operating free-air temperature range (unless otherwise noted)[1]

		bq24080-Q1, bq24081-Q1		UNIT
		MIN	MAX	
Input voltage[2]	IN, $\overline{CE}$, ISET, OUT, $\overline{PG}$, STAT1, STAT2, $\overline{TE}$, TS	–0.3	7	V
Output sink/source current	STAT1, STAT2, $\overline{PG}$		15	mA
Output current	OUT		1.5	A
Operating free-air temperature range, T_A		–40	125	°C
Junction temperature range, T_J				°C
Storage temperature, T_{stg}		–65	150	°C

(1) Stresses beyond those listed under *Absolute Maximum Ratings* may cause permanent damage to the device. These are stress ratings only, which do not imply functional operation of the device at these or any other conditions beyond those indicated under *Recommended Operating Conditions*. Exposure to absolute-maximum-rated conditions for extended periods may affect device reliability.
(2) All voltages are with respect to V_{SS}.

6.2 ESD Ratings

			VALUE	UNIT
$V_{(ESD)}$	Electrostatic discharge	Human-body model (HBM), per AEC Q100-002[1]	±2000	V
		Charged-device model (CDM), per AEC Q100-011	±500	

(1) AEC Q100-002 indicates that HBM stressing shall be in accordance with the ANSI/ESDA/JEDEC JS-001 specification.

6.3 Recommended Operating Conditions

over operating free-air temperature range (unless otherwise noted)

		MIN	MAX	UNIT
V_{CC}	Supply voltage	4.5	6.5	V
T_J	Operating junction temperature range	–40	125	°C

6.4 Thermal Information

THERMAL METRIC[1]		bq24080-Q1, bq24081-Q1	UNIT
		DRC (10 PINS)	
$R_{\theta JA}$	Junction-to-ambient thermal resistance	44.3	°C/W
$R_{\theta JC(top)}$	Junction-to-case (top) thermal resistance	50.4	°C/W
$R_{\theta JB}$	Junction-to-board thermal resistance	19.7	°C/W
ψ_{JT}	Junction-to-top characterization parameter	0.7	°C/W
ψ_{JB}	Junction-to-board characterization parameter	19.9	°C/W
$R_{\theta JC(bot)}$	Junction-to-case (bottom) thermal resistance	4.5	°C/W

(1) For more information about traditional and new thermal metrics, see the *Semiconductor and IC Package Thermal Metrics* application report.

Copyright © 2015–2017, Texas Instruments Incorporated

6.5 Electrical Characteristics

over –40°C ≤ T_J ≤ 125°C and recommended supply voltage (unless otherwise noted)

PARAMETER		TEST CONDITIONS	MIN	TYP	MAX	UNIT
INPUT CURRENT						
$I_{CC(VCC)}$	V_{CC} current	$V_{CC} > V_{CC(min)}$		1.2	2	mA
$I_{CC(SLP)}$	Sleep current	Sum of currents into OUT pin, $V_{CC} < V_{(SLP)}$		2	5	µA
$I_{CC(STBY)}$	Standby current	$\overline{CE}$ = High, 0°C ≤ T_J ≤ 85°C			150	µA
$I_{IB(OUT)}$	Input current on OUT pin	Charge DONE, $V_{CC} > V_{CC(MIN)}$		1	5	µA
VOLTAGE REGULATION $V_{O(REG)} + V_{(DO-MAX)} \le V_{CC}$, $I_{(TERM)} < I_{O(OUT)} \le 1$ A						
$V_{O(REG)}$	Output voltage			4.2		V
	Voltage regulation accuracy	T_A = 25°C	−0.35%		0.35%	
			−1%		1%	
$V_{(DO)}$	Dropout voltage ($V_{(IN)} - V_{(OUT)}$)	$V_{O(OUT)} = V_{O(REG)}$, $I_{O(OUT)}$ = 1 A $V_{O(REG)} + V_{(DO)}) \le V_{CC}$		350	500	mV
CURRENT REGULATION						
$I_{O(OUT)}$	Output current range(1)	$V_{I(OUT)} > V_{(LOWV)}$, $V_{I(IN)} - V_{I(OUT)} > V_{(DO)}$, $V_{CC} \ge 4.5$ V	20		1000	mA
$V_{(SET)}$	Output current set voltage	Voltage on ISET pin, $V_{CC} \ge 4.5$ V, $V_I \ge 4.5$ V, $V_{I(OUT)} > V_{(LOWV)}$, $V_I - V_{I(OUT)} > V_{(DO)}$	2.463	2.5	2.538	V
$K_{(SET)}$	Output current set factor	50 mA ≤ $I_{O(OUT)}$ ≤ 1 A	307	322	337	
		10 mA ≤ $I_{O(OUT)}$ < 50 mA	296	320	346	
		1 mA ≤ $I_{O(OUT)}$ < 10 mA	246	320	416	
PRECHARGE AND SHORT-CIRCUIT CURRENT REGULATION						
$V_{(LOWV)}$	Precharge to fast-charge transition threshold	Voltage on OUT pin	2.8	3	3.2	V
$I_{O(PRECHG)}$	Precharge range(2)	0 V < $V_{I(OUT)} < V_{(LOWV)}$, $t < t_{(PRECHG)}$	2		100	mA
$V_{(PRECHG)}$	Precharge set voltage	Voltage on ISET pin, $V_{O(REG)}$ = 4.2 V, 0 V < $V_{I(OUT)} > V_{(LOWV)}$, $t < t_{(PRECHG)}$	240	255	270	mV
TERMINATION DETECTION						
$I_{(TERM)}$	Charge termination detection range(3)	$V_{I(OUT)} > V_{(RCH)}$, $t < t_{(TRMDET)}$	2		100	mA
$V_{(TERM)}$	Charge termination detection set voltage	Voltage on ISET pin, $V_{O(REG)}$ = 4.2 V, $V_{I(OUT)} > V_{(RCH)}$, $t < t_{(TRMDET)}$	235	250	265	mV
BATTERY RECHARGE THRESHOLD						
$V_{(RCH)}$	Recharge threshold		$V_{O(REG)}$ – 0.115	$V_{O(REG)}$ − 0.10	$V_{O(REG)}$ − 0.085	V
STAT1, STAT2, and $\overline{PG}$ OUTPUTS						
V_{OL}	Low-level output saturation voltage	I_O = 5 mA			0.25	V
$\overline{CE}$ and $\overline{TE}$ INPUTS						
V_{IL}	Low-level input voltage		0		0.4	V
V_{IH}	High-level input voltage		1.4			V
I_{IL}	Low-level input current		–1			µA
I_{IH}	High-level input current				1	µA
TIMERS						
$I_{(FAULT)}$	Timer fault recovery current			200		µA

(1) See Equation 2.
(2) See Equation 1.
(3) See Equation 4.

Copyright © 2015–2017, Texas Instruments Incorporated

Electrical Characteristics (continued)

over –40°C ≤ T_J ≤ 125°C and recommended supply voltage (unless otherwise noted)

PARAMETER		TEST CONDITIONS	MIN	TYP	MAX	UNIT
SLEEP COMPARATOR						
$V_{(SLP)}$	Sleep-mode entry threshold voltage	2.3 V ≤ $V_{I(OUT)}$ ≤ $V_{O(REG)}$			V_{CC} ≤ $V_{I(OUT)}$ + 80 mV	V
$V_{(SLPEXIT)}$	Sleep-mode exit threshold voltage		V_{CC} ≥ $V_{I(OUT)}$ + 190			
THERMAL SHUTDOWN THRESHOLDS						
$T_{(SHTDWN)}$	Thermal trip threshold	T_J increasing		165		°C
	Thermal hysteresis			15		
UNDERVOLTAGE LOCKOUT						
UVLO	Undervoltage lockout	Decreasing V_{CC}	2.4	2.5	2.6	V
	Hysteresis			27		mV
TEMPERATURE SENSE COMPARATOR (bq24081-Q1)						
$V_{(TS1)}$	High-voltage threshold		2.475	2.5	2.525	V
$V_{(TS2)}$	Low-voltage threshold		0.485	0.5	0.515	
$I_{(TS)}$	TS pin current source		96	102	108	µA

6.6 Timing Requirements

			MIN	NOM	MAX	UNIT
PRECHARGE AND SHORT-CIRCUIT CURRENT REGULATION						
	Deglitch time for fast-charge to precharge transition	$V_{CC(MIN)}$ ≥ 4.5 V, t_{FALL} = 100 ns, 10-mV overdrive, $V_{I(OUT)}$ decreasing below threshold	250	375	500	ms
TERMINATION DETECTION						
t_{TRMDET}	Deglitch time for termination detection	$V_{CC(MIN)}$ ≥ 4.5 V, t_{FALL} = 100 ns charging current decreasing below 10-mV overdrive	250	375	500	ms
BATTERY RECHARGE THRESHOLD						
$t_{(DEGL)}$	Deglitch time for recharge detect	$V_{CC(MIN)}$ ≥ 4.5 V, t_{FALL} = 100 ns decreasing below or increasing above threshold, 10-mV overdrive	250	375	500	ms
TIMERS						
$t_{(PRECHG)}$	Precharge time		1,584	1,800	2,016	s
$t_{(CHG)}$	Charge time		22,176	25,200	28,224	s
SLEEP COMPARATOR						
	Sleep-mode entry deglitch time	$V_{(IN)}$ decreasing below threshold, t_{FALL} = 100 ns, 10-mV overdrive	250	375	500	ms
TEMPERATURE SENSE COMPARATOR (bq24081-Q1)						
$t_{(DEGL)}$	Deglitch time for temperature fault		250	375	500	ms

Copyright © 2015–2017, Texas Instruments Incorporated

6.7 Typical Characteristics

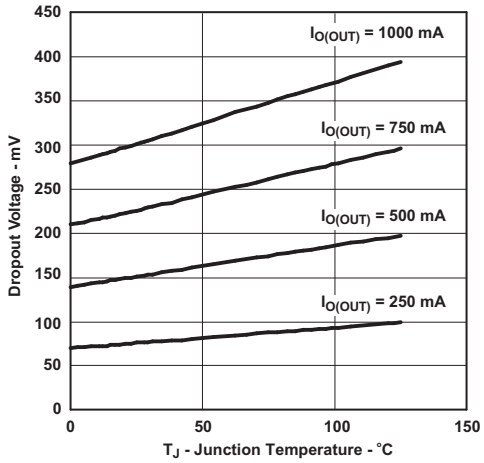

Figure 1. Dropout Voltage vs Junction Temperature

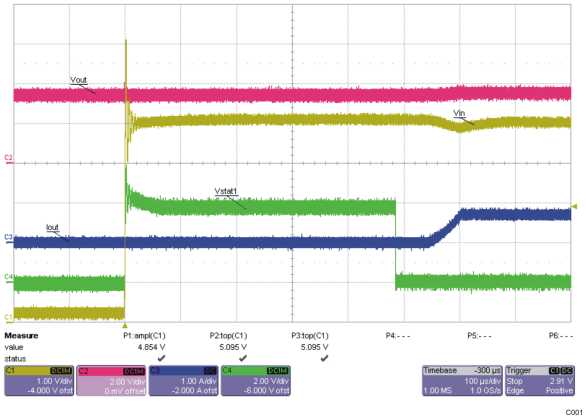

Figure 2. V_{IN} Hot-Plug Power-Up Sequence

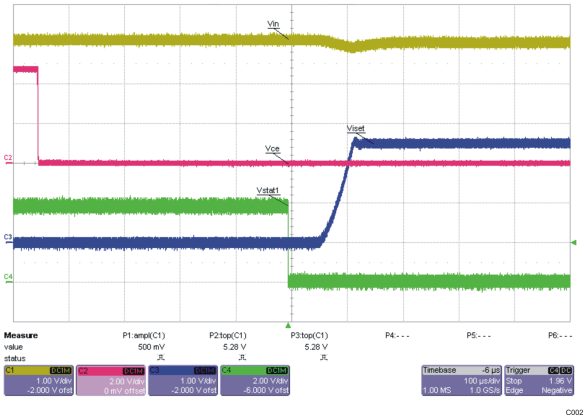

Figure 3. Charge Enable Power-Up Sequence ($\overline{CE}$ = High-to-Low)

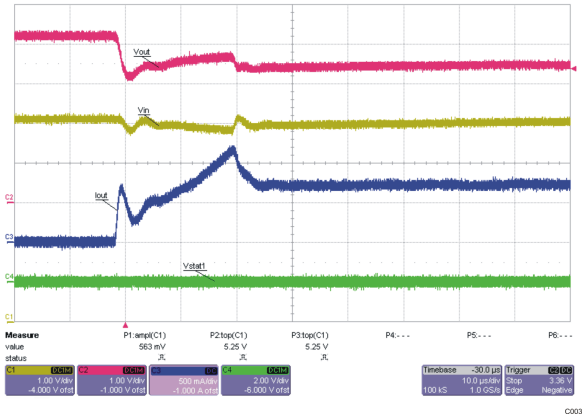

Figure 4. Battery Hot-Plug During Charging Phase

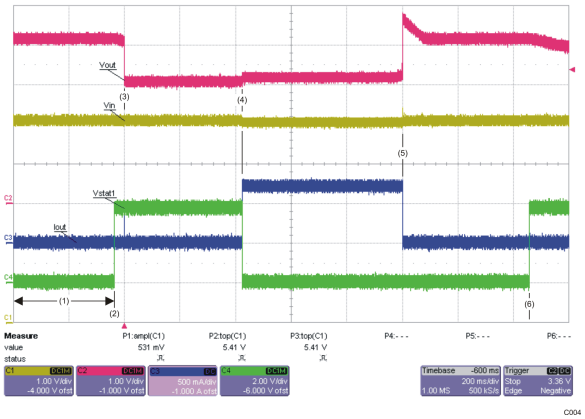

No battery – In termination deglitch prior to STAT1 going high. V_{OUT} (V_{BAT}) cycling between *charge* and *done* prior to screen capture
Stat1 goes high – In *done* state
2-V battery is inserted during the *charge done* state.
Charging is initiated – STAT1 goes low and charge current is applied.
Battery is removed – V_{OUT} goes into regulation, I_{OUT} goes to zero, and termination deglitch timer starts running (same as state 1).
Deglitch timer expires – *charge done* is declared.

Figure 5. Battery Hot-Plug and Removal Power Sequence

7 Detailed Description

7.1 Overview

The device supports a precision Li-Ion, Li-Pol charging system suitable for single cells. Figure 6 shows a typical charge profile, and Figure 7 shows an operational flow chart.

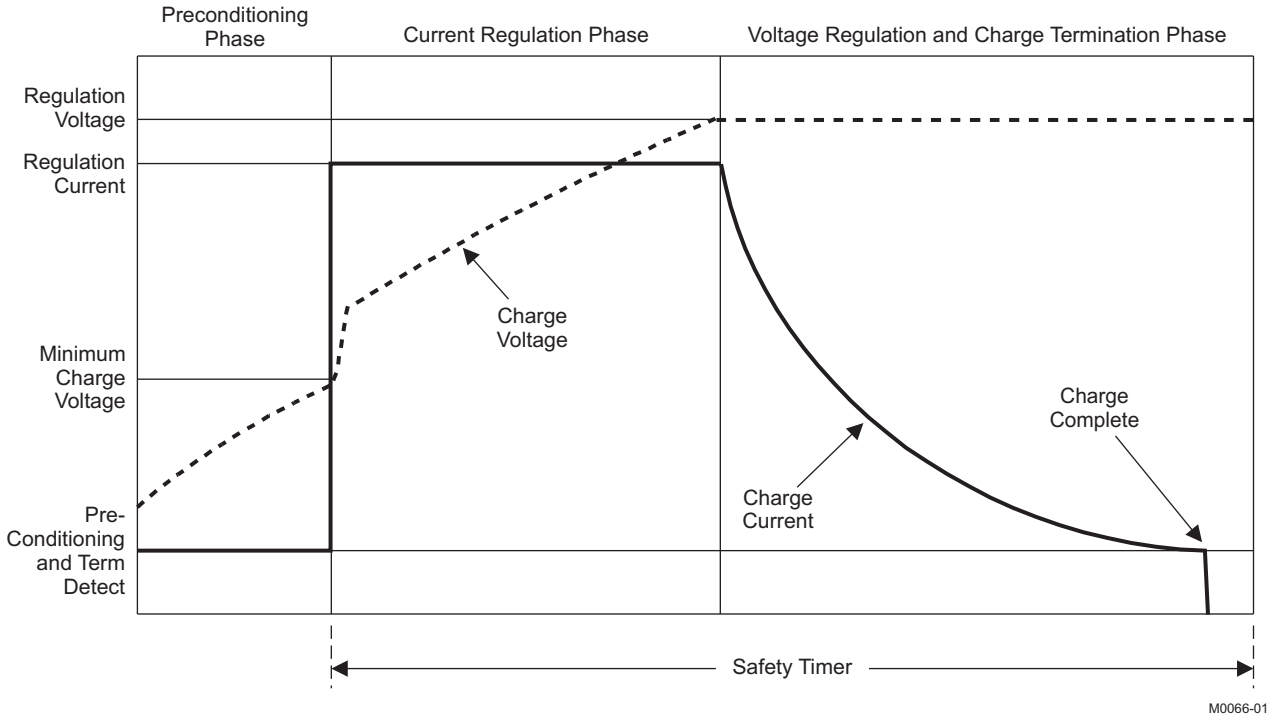

Figure 6. Typical Charging Profile

Copyright © 2015–2017, Texas Instruments Incorporated

Overview (continued)

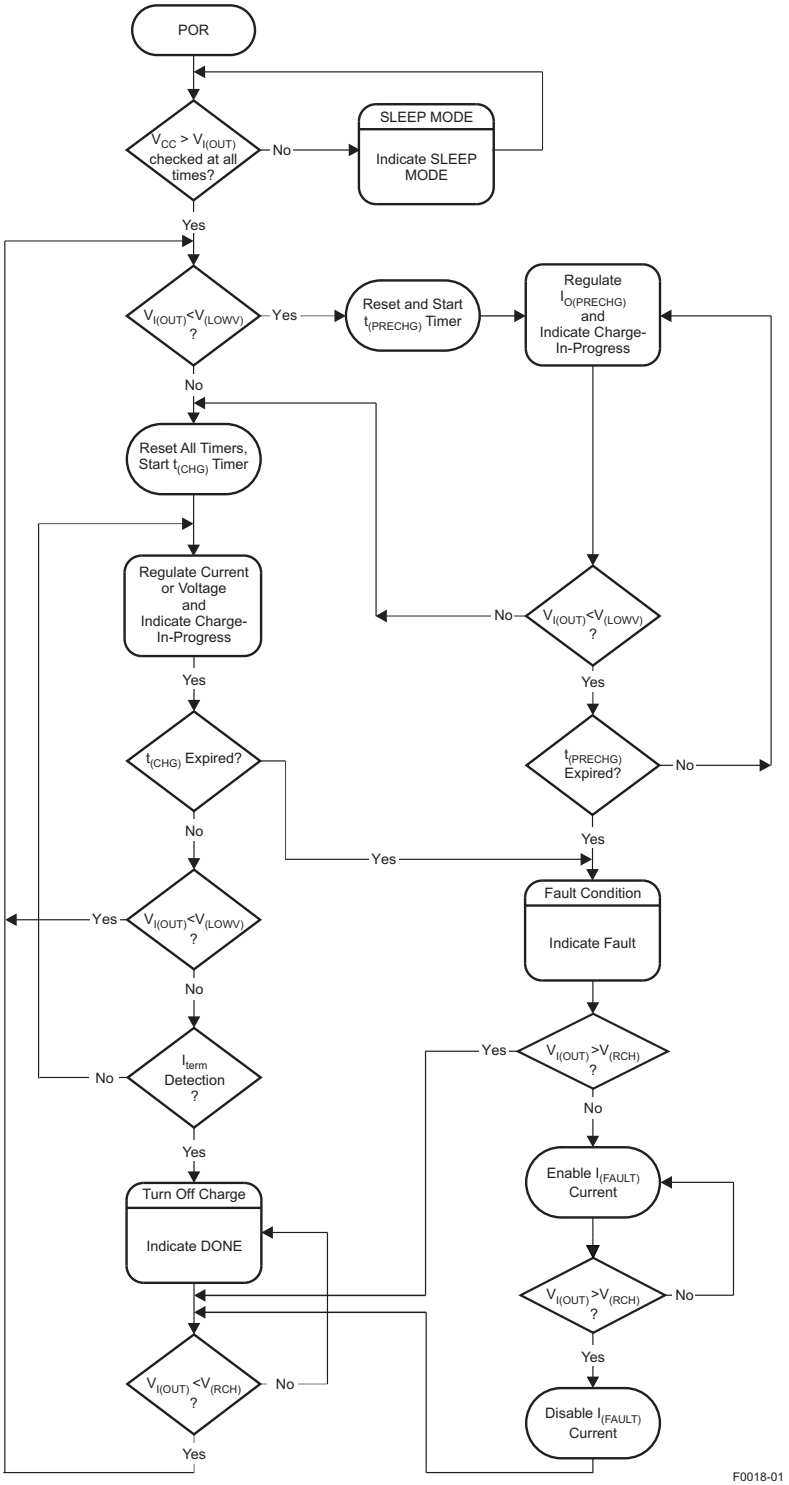

Figure 7. Operational Flow Chart

7.2 Functional Block Diagram

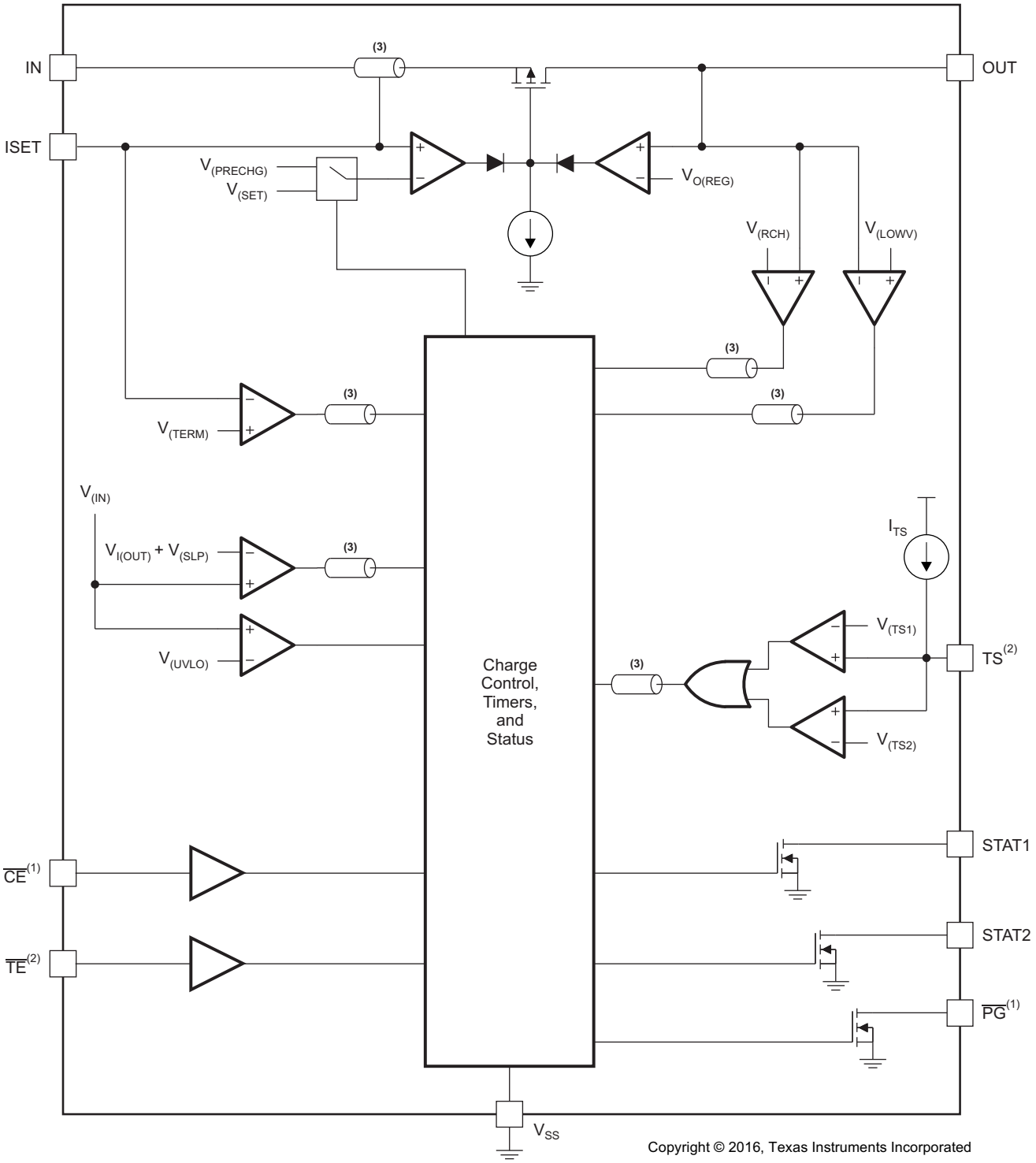

(1) bq24080-Q1 only
(2) bq24081-Q1 only
(3) Signal deglitched

Copyright © 2015–2017, Texas Instruments Incorporated

7.3 Feature Description

7.3.1 Battery Preconditioning

During a charge cycle, if the battery voltage is below the $V_{(LOWV)}$ threshold, the device applies a precharge current, $I_{O(PRECHG)}$, to the battery. This feature revives deeply discharged cells. Resistor R_{SET}, connected between the ISET and V_{SS}, determines the precharge rate. The $V_{(PRECHG)}$ and $K_{(SET)}$ parameters are specified in the *Electrical Characteristics* table.

$$I_{O(PRECHG)} = \frac{K_{(SET)} \times V_{(PRECHG)}}{R_{SET}} \tag{1}$$

The device activates a safety timer, $t_{(PRECHG)}$, during the conditioning phase. If the $V_{(LOWV)}$ threshold is not reached within the timer period, the device turns off the charger and enunciates FAULT on the STATx pins. See the *Timer Fault and Recovery* section for additional details.

7.3.2 Battery Fast-Charge Constant Current

The device offers on-chip current regulation with programmable set point. Resistor R_{SET}, connected between the ISET and V_{SS}, determines the charge rate. The $V_{(SET)}$ and $K_{(SET)}$ parameters are specified in the specifications table.

$$I_{O(OUT)} = \frac{K_{(SET)} \times V_{(SET)}}{R_{SET}} \tag{2}$$

7.3.3 Charge-Current Monitor

When the charge function is enabled internal circuits generate a current proportional to the charge current at the ISET pin. This current, when applied to the external charge current programming resistor R_{ISET} generates an analog voltage that can be monitored by an external host to calculate the current sourced from the OUT pin.

$$V_{(ISET)} = I_{(OUT)} \times \frac{R_{(ISET)}}{K_{(ISET)}} \tag{3}$$

7.3.4 Battery Fast-Charge Voltage Regulation

The voltage regulation feedback is through the OUT pin. This input is tied directly to the positive side of the battery pack. The device monitors the battery-pack voltage between the OUT and V_{SS} pins. When the battery voltage rises to the $V_{O(REG)}$ threshold, the voltage regulation phase begins and the charging current begins to taper down.

As a safety backup, the device also monitors the charge time in the charge mode. If charge is not terminated within this time period, $t_{(CHG)}$, the charger is turned off and FAULT is set on the STATx pins. See the *Timer Fault and Recovery* section for additional details.

7.3.5 Charge Termination Detection and Recharge

The device monitors the charging current during the voltage regulation phase. Once the termination threshold, $I_{(TERM)}$, is detected, charge is terminated. The $V_{(TERM)}$ and $K_{(SET)}$ parameters are specified in the *Electrical Characteristics* table.

$$I_{O(TERM)} = \frac{K_{(SET)} \times V_{(TERM)}}{R_{SET}} \tag{4}$$

After charge termination, the device restarts the charge once the voltage on the OUT pin falls below the $V_{(RCH)}$ threshold. This feature keeps the battery at full capacity at all times.

The device monitors the charging current during the voltage regulation phase. Once the termination threshold, $I_{(TERM)}$, is detected, the charge is terminated immediately.

Resistor R_{SET}, connected between the ISET and V_{SS}, determines the current level at the termination threshold.

Copyright © 2015–2017, Texas Instruments Incorporated

Feature Description (continued)

7.3.6 Charge Status Outputs

The open-drain STAT1 and STAT2 outputs indicate various charger operations as shown in Table 1. These status pins can be used to drive LEDs or communicate to the host processor. Note that *OFF* indicates the open-drain transistor is turned off.

Table 1. Status Pin Summary

CHANGE STATE	STAT1	STAT2
Precharge in progress	ON	ON
Fast charge in progress	ON	OFF
Charge done	OFF	ON
Charge suspend (temperature)	OFF	OFF
Timer fault		
Sleep mode		

7.3.7 $\overline{PG}$ Output (bq24080-Q1)

The open-drain power-good ($\overline{PG}$) output pulls low when a valid input voltage is present. This output is turned off (high-impedance) in sleep mode. The $\overline{PG}$ pin can be used to drive an LED or communicate to the host processor.

7.3.8 Charge-Enabled ($\overline{CE}$) Input (bq24080-Q1)

The $\overline{CE}$ digital input is used to disable or enable the charge process. A low-level signal on this pin enables the charge and a high-level signal disables the charge and places the device in a low-power mode. A high-to-low transition on this pin also resets all timers and timer fault conditions.

7.3.9 Timer Enabled ($\overline{TE}$) Input (bq24081-Q1)

The $\overline{TE}$ digital input is used to disable or enable the fast-charge timer. A low-level signal on this pin enables the fast-charge timer, and a high-level signal disables this feature.

7.3.10 Temperature Qualification (bq24081-Q1)

The bq24081-Q1 continuously monitors battery temperature by measuring the voltage between the TS and V_{SS} pins. An internal current source provides the bias for common 10-kΩ negative-temperature-coefficient thermistors (NTC) (see the functional block diagram). The device compares the voltage on the TS pin with the internal $V_{(TS1)}$ and $V_{(TS2)}$ thresholds to determine if charging is allowed. If a temperature outside the $V_{(TS1)}$ and $V_{(TS2)}$ thresholds is detected, the device immediately suspends the charge by turning off the power FET and holding the timer value (i.e., timers are not reset). Charge is resumed when the temperature returns within the normal range.

The allowed temperature range with a 103AT-type thermistor is 0°C to 45°C. However, the user may modify these thresholds by adding external resistors (see Figure 8 and Figure 9).

Copyright © 2015–2017, Texas Instruments Incorporated

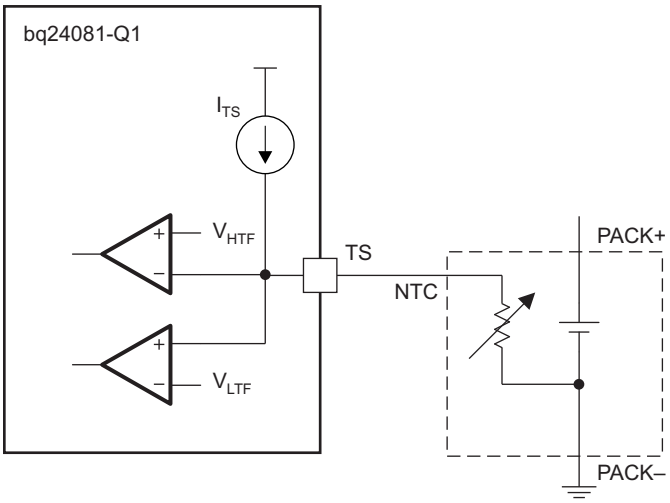

Copyright © 2016, Texas Instruments Incorporated

Figure 8. Default Temperature Thresholds

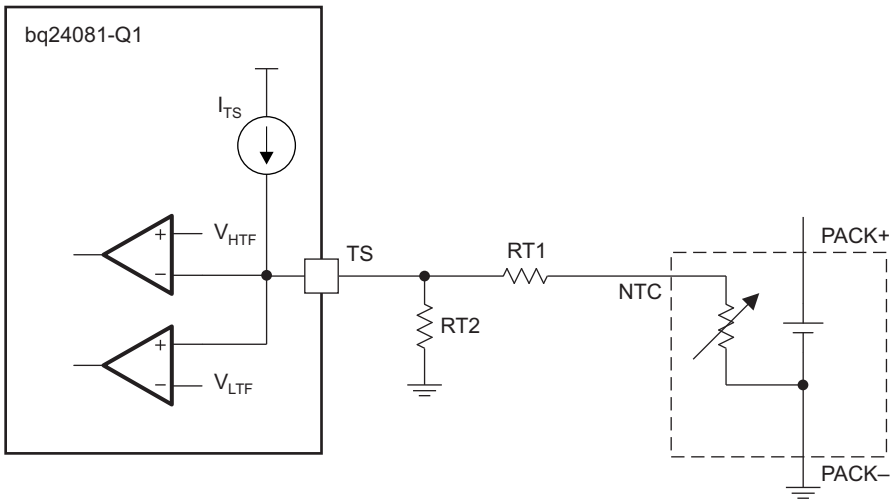

Copyright © 2016, Texas Instruments Incorporated

Figure 9. Temperature Thresholds Modified by External Resistors

7.3.11 Timer Fault and Recovery

As shown in Figure 7, the device provides a recovery method to deal with timer fault conditions. The following summarizes this method:

7.3.11.1 Condition Number 1

OUT pin voltage is above the recharge threshold ($V_{(RCH)}$), and a timeout fault occurs.

Recovery method: the device waits for the OUT pin voltage to fall below the recharge threshold. This could happen as a result of a load on the battery, self-discharge, or battery removal. Once the OUT pin voltage falls below the recharge threshold, the device clears the fault and starts a new charge cycle. A POR, $\overline{TE}$, or $\overline{CE}$ toggle also clears the fault.

7.3.11.2 Condition Number 2

OUT pin voltage is below the recharge threshold ($V_{(RCH)}$), and a timeout fault occurs

Recovery method: Under this scenario, the device applies the $I_{(FAULT)}$ current. This small current is used to detect a battery removal condition and remains on as long as the battery voltage stays below the recharge threshold. If the OUT pin voltage goes above the recharge threshold, then the device disables the $I_{(FAULT)}$ current and executes the recovery method described for condition number 1. Once the OUT pin voltage falls below the recharge threshold, the bq24080-Q1 clears the fault and starts a new charge cycle. A POR, $\overline{TE}$, or $\overline{CE}$ toggle also clears the fault.

7.4 Device Functional Modes

7.4.1 Sleep Mode

The device enters the low-power sleep mode if the input power (IN) is removed from the circuit. This feature prevents draining the battery during the absence of input supply.

Copyright © 2015–2017, Texas Instruments Incorporated

8 Application and Implementation

NOTE

Information in the following applications sections is not part of the TI component specification, and TI does not warrant its accuracy or completeness. TI's customers are responsible for determining suitability of components for their purposes. Customers should validate and test their design implementation to confirm system functionality.

8.1 Application Information

The bq2408X-Q1 device is Lithium chemistry (Lithium Ion and Lithium Polymer) charger that is intended for automotive applications. The allows the designer to pick an automotive qualified charger for applications where the Li chemistry is needed. Such applications may involve E-Call (back up safety call) or infotainment systems within the automotive space. The device comes completely ready with an integrated charge current monitor and safety timers. The LDO based charger design allows for a cost optimized safe charging algorithm.

8.2 Typical Application

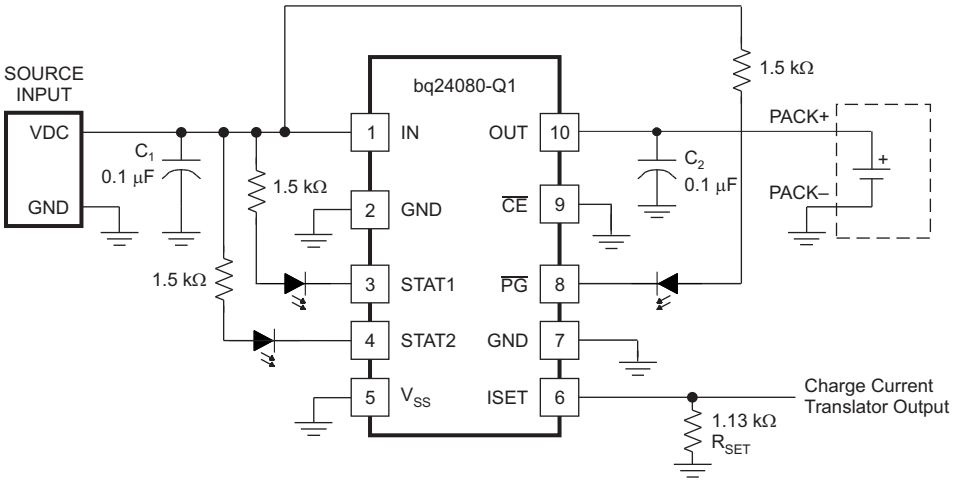

Copyright © 2016, Texas Instruments Incorporated

Figure 10. Typical Application Circuit

8.2.1 Design Requirements

For this design example, use the parameters shown in Table 2.

Table 2. Design Parameters

PARAMETER	VALUE
Supply voltage	5 V
Fast-charge current	≈ 750 mA
Battery-Temperature sense (bq24081-Q1)	–2°C to 44.5°C (default setting)

8.2.2 Detailed Design Procedure

8.2.2.1 Calculations

Program the charge current for 750 mA:

$$R_{ISET} = [V_{(SET)} \times K_{(SET)} / I_{(OUT)}] \quad (5)$$

From *Electrical Characteristics* table, $V_{(SET)}$ = 2.5 V.

From *Electrical Characteristics* table, $K_{(SET)}$ = 322.

$$R_{ISET} = [2.5\ V \times 322 / 0.75\ A] = 1.073\ k\Omega \quad (6)$$

Selecting the closest standard value, use a 1.07-kΩ resistor connected between ISET (pin 6) and ground.

8.2.2.2 Battery Temperature Sense (bq24081-Q1):

Use a Semitec 103AT-4 NTC thermistor connected between TS (pin 9) and ground.

$$R_{THERM\text{-}cold} = [V_{(TS1)} / I_{(TS)}] = 2.5V / 100\ \mu A = 25\ k\Omega \quad (7)$$

$$R_{THERM\text{-}hot} = [V_{(TS2)} / I_{(TS)}] = 0.5V / 100\ \mu A = 5\ k\Omega \quad (8)$$

Look up the corresponding temperature value in the manufacturer's resistance-temperature table for the thermistor selected. For a 103AT-4 Semitec thermistor:

5 kΩ = 44.5°C
25 kΩ = 2°C

8.2.2.3 STAT Pins (All Devices) and PG Pin (bq24080-Q1):

Status pins Monitored by Processor:

Select a pullup resistor that can source more than the input bias (leakage) current of both the processor and status pins and still provide a logic high.

$$R_{PULLUP} \leq [V_{(cc\text{-}pullup)} - V_{(logic\ hi\text{-}min)} / (I_{(\mu P\text{-}monitor)} + I_{(STAT\text{-}OpenDrain)})] = (3.3\ V - 1.9\ V) / (1\ \mu A + 1\ \mu A) \leq 700\ k\Omega; \quad (9)$$

Connect a 100-kΩ pullup between each status pin and the V_{CC} of the processor. Connect each status pin to a μP monitor pin.

Status viewed by LED:

Select an LED with a current rating less than 10 mA and select a resistor to place in series with the LED to limit the current to the desired current value (brightness).

$$R_{LED} = [(V_{(IN)} - V_{(LED\text{-}on)}) / I_{(LED)}] = (5\ V - 2\ V) / 1.5\ mA = 2\ k\Omega. \quad (10)$$

Place an LED and resistor in series between the input and each status pin.

8.2.2.4 Selecting Input and Output Capacitors

In most applications, all that is needed is a high-frequency decoupling capacitor on the input power pin. A 0.1-μF ceramic capacitor, placed in close proximity to the IN pin and GND pad works well. In some applications, it may be necessary to protect against a hot plug input voltage overshoot. This is done in three ways:

1. The best way is to add an input zener, 6.2 V, between the IN pin and V_{SS}.
2. A low-power zener is adequate for the single event transient. Increasing the input capacitance lowers the characteristic impedance which makes the input resistance move effective at damping the overshoot, but risks damaging the input contacts by the high inrush current.
3. Placing a resistor in series with the input dampens the overshoot, but causes excess power dissipation.

The device only requires a small capacitor for loop stability. A 0.1-μF ceramic capacitor placed between the OUT and GND pad is typically sufficient.

Copyright © 2015–2017, Texas Instruments Incorporated

8.2.3 Application Curves

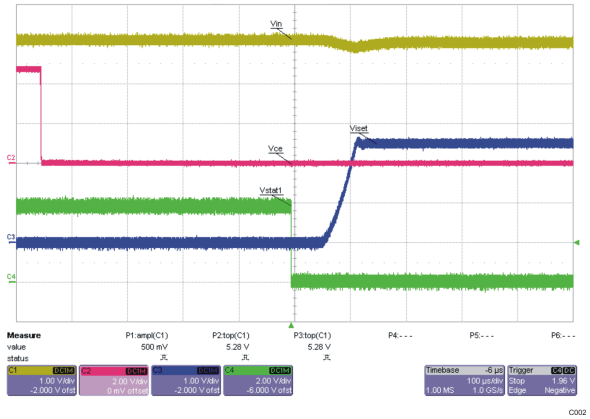

Figure 11. Charge Enable Power-Up Sequence ($\overline{CE}$ = High-to-Low)

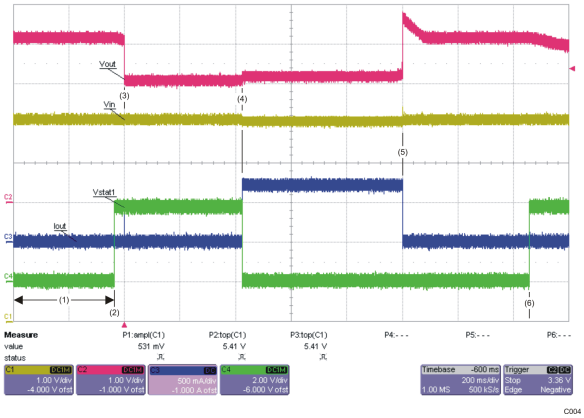

No battery – In termination deglitch prior to STAT1 going high. V_{OUT} (V_{BAT}) cycling between *charge* and *done* prior to screen capture

Stat1 goes high – In *done* state

2-V battery is inserted during the *charge done* state.

Charging is initiated – STAT1 goes low and charge current is applied.

Battery is removed – V_{OUT} goes into regulation, I_{OUT} goes to zero, and termination deglitch timer starts running (same as state 1).

Deglitch timer expires – *charge done* is declared.

Figure 12. Battery Hot-Plug and Removal Power Sequence

9 Power Supply Recommendations

The devices are intended to operate withing the ranges shown in Recommended Operating Conditions. Because the input of the device on pin IN is subject to a power source that is external, care muse be taken to not exercise the pin above the Absolute Maximum Rating of the Pin shown in the *Absolute Maximum Ratings* table.

Copyright © 2015–2017, Texas Instruments Incorporated

10 Layout

10.1 Layout Guidelines

It is important to pay special attention to the PCB layout. The following provides some guidelines:

- To obtain optimal performance, the decoupling capacitor from V_{CC} to $V_{(IN)}$ and the output filter capacitors from OUT to V_{SS} should be placed as close as possible to the device, with short trace runs to both signal and V_{SS} pins. The V_{SS} pin should have short trace runs to the GND pin.
- All low-current V_{SS} connections should be kept separate from the high-current charge or discharge paths from the battery. Use a single-point ground technique incorporating both the small-signal ground path and the power ground path.
- The high-current charge paths into IN and from the OUT pins must be sized appropriately for the maximum charge current in order to avoid voltage drops in these traces.
- The device is packaged in a thermally enhanced MLP package. The package includes a thermal pad to provide an effective thermal contact between the device and the printed circuit board (PCB). Full PCB design guidelines for this package are provided in the application report entitled, *QFN/SON PCB Attachment* (TI Literature Number SLUA271).

10.2 Layout Example

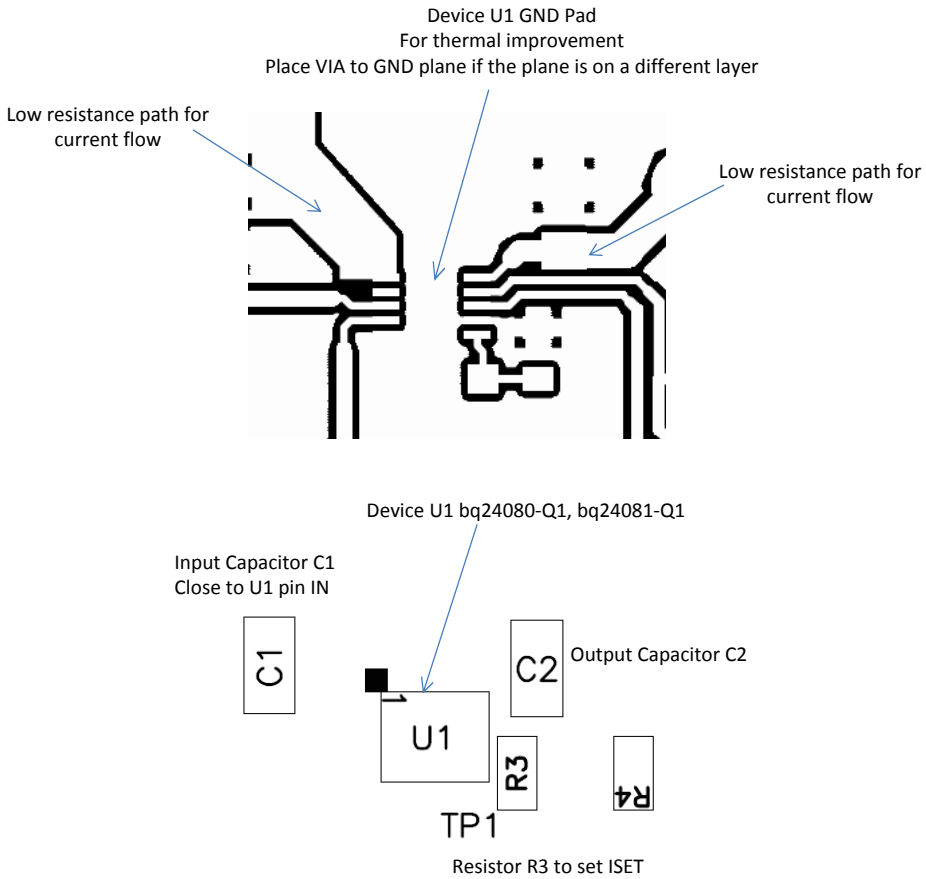

Figure 13. Board Layout

Copyright © 2015–2017, Texas Instruments Incorporated

10.3 Thermal Considerations

The bq24080-Q1 and bq24081-Q1 are packaged in a thermally enhanced MLP package. The package includes a thermal pad to provide an effective thermal contact between the device and the printed-circuit board (PCB). Full PCB design guidelines for this package are provided in the application report entitled, *QFN/SON PCB Attachment* (TI Literature Number SLUA271).

The most common measure of package thermal performance is thermal impedance ($R_{\theta JA}$) measured (or modeled) from the device junction to the air surrounding the package surface (ambient). The mathematical expression for $R_{\theta JA}$ is:

$$R_{\theta JA} = \frac{T_J - T_A}{P} \tag{11}$$

Where:

- T_J = device junction temperature
- T_A = ambient temperature
- P = device power dissipation

Factors that can greatly influence the measurement and calculation of $R_{\theta JA}$ include:

- Orientation of the device (horizontal or vertical)
- Volume of the ambient air surrounding the device under test and airflow
- Whether other surfaces are in close proximity to the device being tested
- Use multiple 10–13 mil vias in the PowerPAD™ to copper ground plane.
- Avoid cutting the ground plane with a signal trace near the power IC.
- The PCB must be sized to have adequate surface area for heat dissipation.
- FR4 (figerglass) thickness should be minimized.

The device power dissipation, P, is a function of the charge rate and the voltage drop across the internal Power FET. It can be calculated from the following equation:

$$P = (V_{(IN)} - V_{(OUT)}) \times I_{O(OUT)} \tag{12}$$

Due to the charge profile of Li-xx batteries, the maximum power dissipation is typically seen at the beginning of the charge cycle when the battery voltage is at its lowest. See Figure 6.

11 Device and Documentation Support

11.1 Device Support

11.2 Documentation Support

QFN/SON PCB Attachment , (SLUA271).

11.3 Related Links

The table below lists quick access links. Categories include technical documents, support and community resources, tools and software, and quick access to sample or buy.

Table 3. Related Links

PARTS	PRODUCT FOLDER	SAMPLE & BUY	TECHNICAL DOCUMENTS	TOOLS & SOFTWARE	SUPPORT & COMMUNITY
bq24080-Q1	Click here	Click here	Click here	Click here	Click here
bq24081-Q1	Click here	Click here	Click here	Click here	Click here

11.4 Receiving Notification of Documentation Updates

To receive notification of documentation updates, navigate to the device product folder on ti.com. In the upper right corner, click on Alert me to register and receive a weekly digest of any product information that has changed. For change details, review the revision history included in any revised document.

11.5 Community Resources

The following links connect to TI community resources. Linked contents are provided "AS IS" by the respective contributors. They do not constitute TI specifications and do not necessarily reflect TI's views; see TI's Terms of Use.

TI E2E™ Online Community ***TI's Engineer-to-Engineer (E2E) Community.*** Created to foster collaboration among engineers. At e2e.ti.com, you can ask questions, share knowledge, explore ideas and help solve problems with fellow engineers.

Design Support ***TI's Design Support*** Quickly find helpful E2E forums along with design support tools and contact information for technical support.

11.6 Trademarks

PowerPAD, E2E are trademarks of Texas Instruments.
All other trademarks are the property of their respective owners.

11.7 Electrostatic Discharge Caution

These devices have limited built-in ESD protection. The leads should be shorted together or the device placed in conductive foam during storage or handling to prevent electrostatic damage to the MOS gates.

11.8 Glossary

SLYZ022 — *TI Glossary*.

This glossary lists and explains terms, acronyms, and definitions.

12 Mechanical, Packaging, and Orderable Information

The following pages include mechanical, packaging, and orderable information. This information is the most current data available for the designated devices. This data is subject to change without notice and revision of this document. For browser-based versions of this data sheet, refer to the left-hand navigation.

Copyright © 2015–2017, Texas Instruments Incorporated

PACKAGING INFORMATION

Orderable part number	Status (1)	Material type (2)	Package | Pins	Package qty | Carrier	RoHS (3)	Lead finish/ Ball material (4)	MSL rating/ Peak reflow (5)	Op temp (°C)	Part marking (6)
BQ24081QDRCRQ1	Active	Production	VSON (DRC) | 10	3000 | LARGE T&R	Yes	NIPDAU	Level-3-260C-168 HR	-40 to 125	ZACQ
BQ24081QDRCRQ1.B	Active	Production	VSON (DRC) | 10	3000 | LARGE T&R	Yes	NIPDAU	Level-3-260C-168 HR	-40 to 125	ZACQ

(1) **Status:** For more details on status, see our product life cycle.

(2) **Material type:** When designated, preproduction parts are prototypes/experimental devices, and are not yet approved or released for full production. Testing and final process, including without limitation quality assurance, reliability performance testing, and/or process qualification, may not yet be complete, and this item is subject to further changes or possible discontinuation. If available for ordering, purchases will be subject to an additional waiver at checkout, and are intended for early internal evaluation purposes only. These items are sold without warranties of any kind.

(3) **RoHS values:** Yes, No, RoHS Exempt. See the TI RoHS Statement for additional information and value definition.

(4) **Lead finish/Ball material:** Parts may have multiple material finish options. Finish options are separated by a vertical ruled line. Lead finish/Ball material values may wrap to two lines if the finish value exceeds the maximum column width.

(5) **MSL rating/Peak reflow:** The moisture sensitivity level ratings and peak solder (reflow) temperatures. In the event that a part has multiple moisture sensitivity ratings, only the lowest level per JEDEC standards is shown. Refer to the shipping label for the actual reflow temperature that will be used to mount the part to the printed circuit board.

(6) **Part marking:** There may be an additional marking, which relates to the logo, the lot trace code information, or the environmental category of the part.

Multiple part markings will be inside parentheses. Only one part marking contained in parentheses and separated by a "~" will appear on a part. If a line is indented then it is a continuation of the previous line and the two combined represent the entire part marking for that device.

Important Information and Disclaimer: The information provided on this page represents TI's knowledge and belief as of the date that it is provided. TI bases its knowledge and belief on information provided by third parties, and makes no representation or warranty as to the accuracy of such information. Efforts are underway to better integrate information from third parties. TI has taken and continues to take reasonable steps to provide representative and accurate information but may not have conducted destructive testing or chemical analysis on incoming materials and chemicals. TI and TI suppliers consider certain information to be proprietary, and thus CAS numbers and other limited information may not be available for release.

In no event shall TI's liability arising out of such information exceed the total purchase price of the TI part(s) at issue in this document sold by TI to Customer on an annual basis.

OTHER QUALIFIED VERSIONS OF BQ24081-Q1 :

- Catalog : BQ24081

NOTE: Qualified Version Definitions:

- Catalog - TI's standard catalog product

TAPE AND REEL INFORMATION

REEL DIMENSIONS

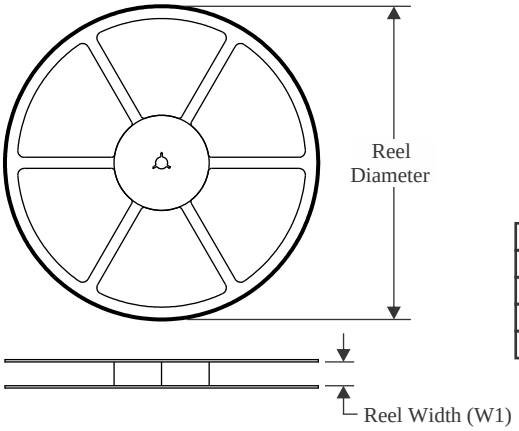

TAPE DIMENSIONS

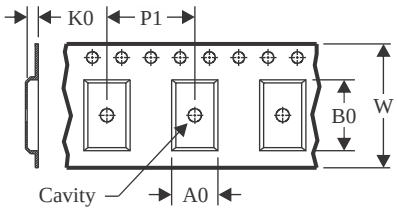

A0	Dimension designed to accommodate the component width
B0	Dimension designed to accommodate the component length
K0	Dimension designed to accommodate the component thickness
W	Overall width of the carrier tape
P1	Pitch between successive cavity centers

QUADRANT ASSIGNMENTS FOR PIN 1 ORIENTATION IN TAPE

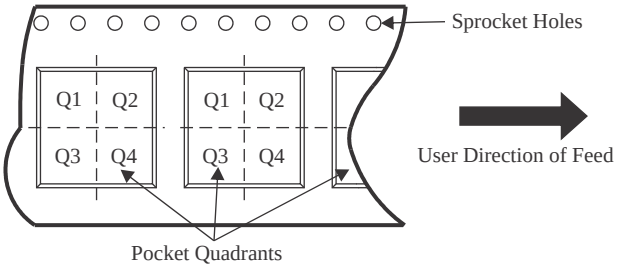

*All dimensions are nominal

Device	Package Type	Package Drawing	Pins	SPQ	Reel Diameter (mm)	Reel Width W1 (mm)	A0 (mm)	B0 (mm)	K0 (mm)	P1 (mm)	W (mm)	Pin1 Quadrant
BQ24081QDRCRQ1	VSON	DRC	10	3000	330.0	12.4	3.3	3.3	1.1	8.0	12.0	Q2

TAPE AND REEL BOX DIMENSIONS

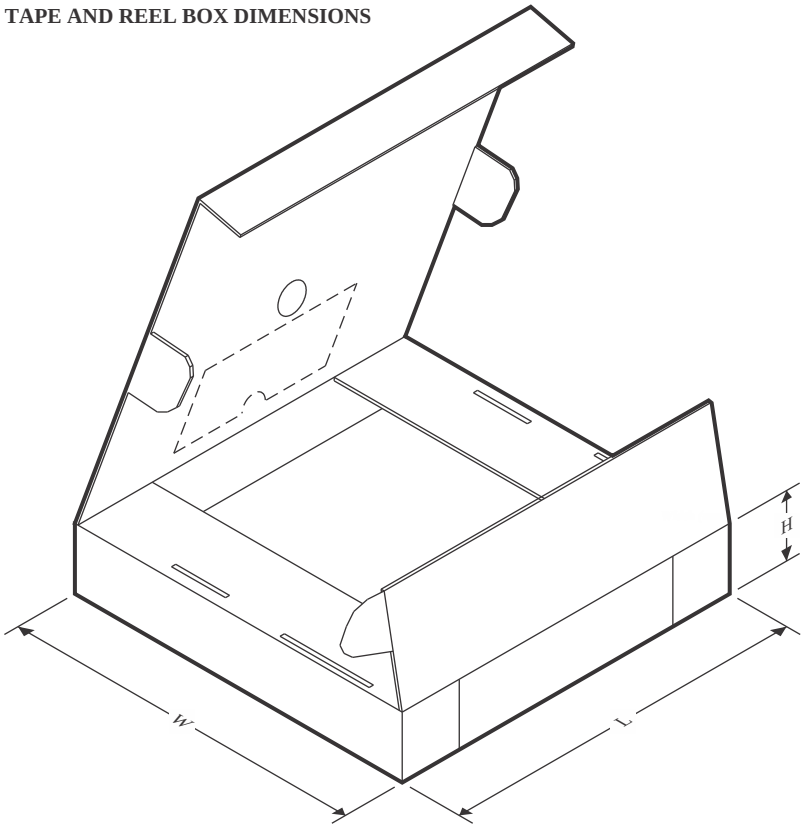

*All dimensions are nominal

Device	Package Type	Package Drawing	Pins	SPQ	Length (mm)	Width (mm)	Height (mm)
BQ24081QDRCRQ1	VSON	DRC	10	3000	367.0	367.0	35.0

GENERIC PACKAGE VIEW

DRC 10

VSON - 1 mm max height

3 x 3, 0.5 mm pitch

PLASTIC SMALL OUTLINE - NO LEAD

This image is a representation of the package family, actual package may vary.
Refer to the product data sheet for package details.

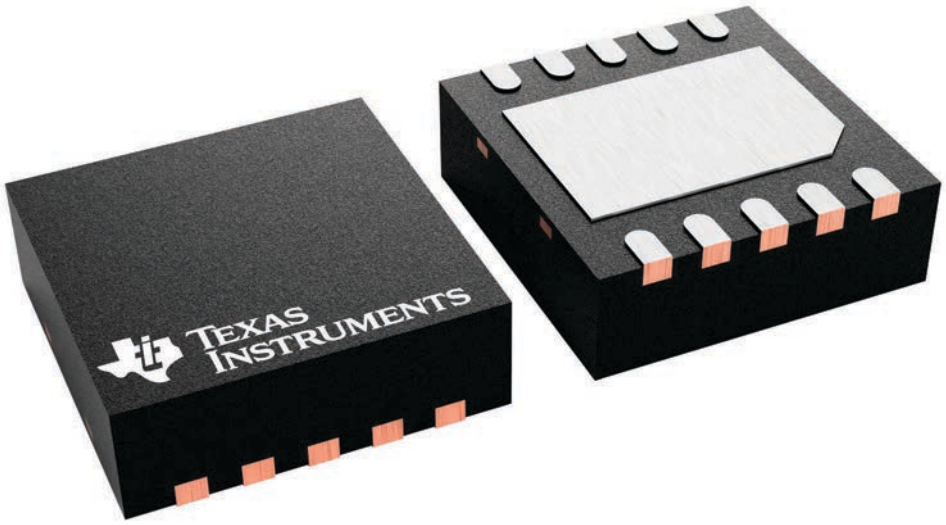

4226193/A

IMPORTANT NOTICE AND DISCLAIMER

TI PROVIDES TECHNICAL AND RELIABILITY DATA (INCLUDING DATA SHEETS), DESIGN RESOURCES (INCLUDING REFERENCE DESIGNS), APPLICATION OR OTHER DESIGN ADVICE, WEB TOOLS, SAFETY INFORMATION, AND OTHER RESOURCES “AS IS” AND WITH ALL FAULTS, AND DISCLAIMS ALL WARRANTIES, EXPRESS AND IMPLIED, INCLUDING WITHOUT LIMITATION ANY IMPLIED WARRANTIES OF MERCHANTABILITY, FITNESS FOR A PARTICULAR PURPOSE OR NON-INFRINGEMENT OF THIRD PARTY INTELLECTUAL PROPERTY RIGHTS.

These resources are intended for skilled developers designing with TI products. You are solely responsible for (1) selecting the appropriate TI products for your application, (2) designing, validating and testing your application, and (3) ensuring your application meets applicable standards, and any other safety, security, regulatory or other requirements.

These resources are subject to change without notice. TI grants you permission to use these resources only for development of an application that uses the TI products described in the resource. Other reproduction and display of these resources is prohibited. No license is granted to any other TI intellectual property right or to any third party intellectual property right. TI disclaims responsibility for, and you will fully indemnify TI and its representatives against, any claims, damages, costs, losses, and liabilities arising out of your use of these resources.

TI’s products are provided subject to TI’s Terms of Sale or other applicable terms available either on ti.com or provided in conjunction with such TI products. TI’s provision of these resources does not expand or otherwise alter TI’s applicable warranties or warranty disclaimers for TI products.

TI objects to and rejects any additional or different terms you may have proposed.

Mailing Address: Texas Instruments, Post Office Box 655303, Dallas, Texas 75265
Copyright © 2025, Texas Instruments Incorporated