TPSI3050M Extended Temperature Reinforced Isolated Switch Driver With 10V Gate Drive and Integrated Bias Supply

1 Features

- No isolated secondary supply required
- Drives external power transistors or SCRs
- 5kV$_{RMS}$ reinforced isolation
- 10V gate drive; 1.5A/2.5A peak source/sink current
- Up to 50mW supply for external auxiliary circuitry
- Supports AC or DC switching
- Supports two-wire or three-wire modes
- Seven levels of power transfer, resistor selectable
- Functional Safety-Capable
  - Documentation available to aid functional safety system design
- Temperature range –55°C to 125°C ambient
- Safety-related certifications
  - Planned: 7071V$_{PK}$ reinforced isolation per DIN EN IEC 60747-17 (VDE 0884-17)
  - Planned: 5kV$_{RMS}$ isolation for 1 minute per UL 1577

2 Applications

- Solid state relay (SSR)
- Avionics
- Battery management system
- Hybrid, electric, and powertrain system
- Building automation
- Factory automation and control

3 Description

The TPSI3050M is a fully integrated, isolated switch driver, which when combined with an external power switch, forms a complete isolated solid state relay (SSR). With a nominal gate drive voltage of 10V with 1.5A and 3.0A peak source and sink current, a large variety of external power switches can be chosen to meet a wide range of applications. The TPSI3050M generates its own secondary bias supply from the power received from its primary side, so no isolated secondary supply bias is required. Additionally, the TPSI3050M can optionally supply power to external supporting circuitry for various application needs.

The TPSI3050M supports two modes of operation based on the number of input pins required. In two-wire mode, typically found in driving mechanical relays, controlling the switch requires only two pins and supports a wide voltage range of operation of 6.5V to 48V. In three-wire mode, the primary supply of 3V to 5.5V is supplied externally, and the switch is controlled through a separate enable.

The secondary side provides a regulated, floating supply rail of 10V for driving a large variety of power switches with no need for a secondary bias supply. The application can drive single power switches for DC applications or dual back-to-back power switches for AC applications, as well as various types of SCR. The TPSI3050M integrated isolation protection is extremely robust with much higher reliability, lower power consumption, and increased temperature ranges than traditional mechanical relays and optocouplers.

The power transfer of the TPSI3050M can be adjusted by selecting one of seven power level settings using an external resistor from the PXFR pin to VSSP. This action allows for tradeoffs in power dissipation versus power provided on the secondary depending on the needs of the application.

Package Information

PART NUMBER	PACKAGE(1)	PACKAGE SIZE(2)
TPSI3050M	DWZ (SOIC, 8)	11.50mm × 5.85mm

(1) For all available packages, see the orderable addendum at the end of the data sheet.
(2) The package size (length × width) is a nominal value and includes pins, where applicable.

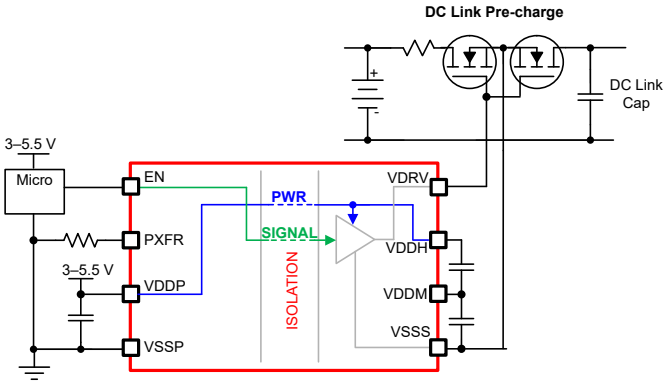

TPSI3050M Simplified Schematic

An IMPORTANT NOTICE at the end of this data sheet addresses availability, warranty, changes, use in safety-critical applications, intellectual property matters and other important disclaimers. PRODUCTION DATA.

Table of Contents

1 Features....1
2 Applications....1
3 Description....1
4 Pin Configuration and Functions....3
5 Specifications....4
5.1 Absolute Maximum Ratings....4
5.2 ESD Ratings....4
5.3 Recommended Operating Conditions....4
5.4 Thermal Information....5
5.5 Power Ratings....5
5.6 Insulation Specifications....5
5.7 Safety-Related Certifications....6
5.8 Safety Limiting Values....6
5.9 Electrical Characteristics....7
5.10 Switching Characteristics....9
5.11 Insulation Characteristic Curves....11
5.12 Typical Characteristics....12
6 Parameter Measurement Information....15
7 Detailed Description....16
7.1 Overview....16
7.2 Functional Block Diagram....16
7.3 Feature Description....16
7.4 Device Functional Modes....23
8 Application and Implementation....24
8.1 Application Information....24
8.2 Typical Application....24
8.3 Power Supply Recommendations....32
8.4 Layout....32
9 Device and Documentation Support....35
9.1 Receiving Notification of Documentation Updates....35
9.2 Support Resources....35
9.3 Trademarks....35
9.4 Electrostatic Discharge Caution....35
9.5 Glossary....35
10 Revision History....35
11 Mechanical, Packaging, and Orderable Information....35

Copyright © 2025 Texas Instruments Incorporated

4 Pin Configuration and Functions

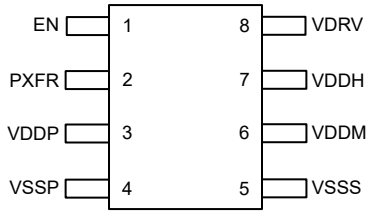

Figure 4-1. TPSI3050M DWZ Package, 8-Pin SOIC (Top View)

Table 4-1. Pin Functions

PIN		I/O	TYPE[(1)]	DESCRIPTION
NO.	NAME			
1	EN	I	—	Active high driver enable
2	PXFR	I	—	Power transfer can be adjusted by selecting one of seven power level settings using an external resistor from the PXFR pin to VSSP. In three-wire mode, a given resistor setting sets the duty cycle of the power converter (see Table 7-1) and hence the amount of power transferred. In two-wire mode, a given resistor setting adjusts the current limit of the EN pin (see Table 7-2) and hence the amount of power transferred.
3	VDDP	—	P	Power supply for primary side
4	VSSP	—	GND	Ground supply for primary side
5	VSSS	—	GND	Ground supply for secondary side
6	VDDM	—	P	Generated mid supply
7	VDDH	—	P	Generated high supply
8	VDRV	O	—	Active high driver output

(1) P = power, GND = ground, NC = no connect

Copyright © 2025 Texas Instruments Incorporated

5 Specifications

5.1 Absolute Maximum Ratings

over operating free-air temperature range (unless otherwise noted)[1]

PARAMETER[1]		MIN	MAX	UNIT
Primary side supply[2]	VDDP	–0.3	6	V
	EN	–0.3	60	V
	PXFR	–0.3	60	V
Secondary side supply[3]	VDRV	–0.3	12	V
	VDDH	–0.3	12	V
	VDDM	–0.3	6	V
	VDDH – VDDM	–0.3	6	V
Junction temperature, T_J		–55	150	°C
Storage temperature, T_{stg}		–65	150	°C

(1) Operation outside the Absolute Maximum Ratings may cause permanent device damage. Absolute Maximum Ratings do not imply functional operation of the device at these or any other conditions beyond those listed under Recommended Operating Conditions. If used outside the Recommended Operating Conditions but within the Absolute Maximum Ratings, the device may not be fully functional, and this may affect device reliability, functionality, performance, and shorten the device lifetime.
(2) All voltage values are with respect to VSSP.
(3) All voltage values are with respect to VSSS.

5.2 ESD Ratings

				VALUE	UNIT
$V_{(ESD)}$	Electrostatic discharge	Human body model (HBM), per ANSI/ESDA/JEDEC JS-001[1]		±2000	V
		Charged device model (CDM), per ANSI/ESDA/JEDEC JS-002[2]	Corner pins (1, 4, 5, and 8)	±750	
			Other pins	±500	

(1) JEDEC document JEP155 states that 500V HBM allows safe manufacturing with a standard ESD control process. Manufacturing with less than 500V HBM is possible if necessary precautions are taken.
(2) JEDEC document JEP157 states that 250V CDM allows safe manufacturing with a standard ESD control process. Manufacturing with less than 250V CDM is possible if necessary precautions are taken.

5.3 Recommended Operating Conditions

over operating free-air temperature range (unless otherwise noted)

		MIN	NOM	MAX	UNIT
VDDP	Primary side supply voltage three-wire mode[1]	3.0		5.5	V
EN	Enable in two-wire mode[1]	0		48.0	V
	Enable in three-wire mode[1]	0		5.5	V
PXFR	Power transfer control[1]	0		5.5	V
C_{VDDP}	Decoupling capacitance on VDDP and VSSP, two-wire mode[3]	220		330	nF
	Decoupling capacitance on VDDP and VSSP, three-wire mode[3]	0.22		20	µF
C_{DIV1} [2]	Decoupling capacitance across VDDH and VDDM[3]	0.003		40	µF
C_{DIV2} [2]	Decoupling capacitance across VDDM and VSSS[3]	0.003		40	µF
T_A	Ambient operating temperature	–55		125	°C
T_J	Operating junction temperature	–55		150	°C
$\lvert\Delta V_{EN}/\Delta t\rvert$	EN rise and fall rates, two-wire mode.	65			V/ms

(1) All voltage values are with respect to VSSP.
(2) $C_{DIV2} \geq C_{DIV1}$. C_{DIV1} and C_{DIV2} should be of same type and tolerance.
(3) All capacitance values are absolute. Derating should be applied where necessary.

Copyright © 2025 Texas Instruments Incorporated

5.4 Thermal Information

THERMAL METRIC[1]		TPSI3050M DWZ (SOIC) 8 PINS	UNIT
$R_{\Theta JA}$	Junction-to-ambient thermal resistance	89.3	°C/W
$R_{\Theta JC(top)}$	Junction-to-case (top) thermal resistance	40.3	°C/W
$R_{\Theta JB}$	Junction-to-board thermal resistance	45.2	°C/W
ψ_{JT}	Junction-to-top characterization parameter	10.3	°C/W
Ψ_{JB}	Junction-to-board characterization parameter	44.4	°C/W

(1) For more information about traditional and new thermal metrics, see the Semiconductor and IC Package Thermal Metrics application report.

5.5 Power Ratings

PARAMETER		TEST CONDITIONS	MIN	TYP	MAX	UNIT
P_D	Maximum power dissipation, VDDP.	V_{VDDP} = 5V, R_{PXFR} = 20kΩ, three-wire mode, C_{VDRV} = 100pF, C_{DIV1} = C_{DIV2} = 100nF, f_{EN} = 1kHz square wave, V_{EN} = 5V peak to peak.			250	mW
	Maximum power dissipation, EN.	R_{PXFR} = 20kΩ, two-wire mode, C_{VDRV} = 100pF, C_{DIV1} = C_{DIV2} = 100nF, f_{EN} = 1kHz square wave, V_{EN} = 48V peak to peak.			350	mW

5.6 Insulation Specifications

PARAMETER		TEST CONDITIONS	SPECIFICATION	UNIT
GENERAL				
CLR	External clearance[1]	Shortest terminal-to-terminal distance through air	≥ 8.5	mm
CPG	External creepage[1]	Shortest terminal-to-terminal distance across the package surface	≥ 8.5	mm
DTI	Distance through the insulation	Minimum internal gap (internal clearance)	≥ 120	µm
CTI	Comparative tracking index	DIN EN 60112 (VDE 0303-11); IEC 60112	≥ 600	V
	Material group	According to IEC 60664-1	I	
	Overvoltage category per IEC 60664-1	Rated mains voltage ≤ 600V_{RMS}	I-IV	
		Rated mains voltage ≤ 1000V_{RMS}	I-III	
DIN EN IEC 60747-17 (VDE 0884-17)				
V_{IORM}	Maximum repetitive peak isolation voltage	AC voltage (bipolar)	1414	V_{PK}
V_{IOWM}	Maximum isolation working voltage	AC voltage (sine wave)	1000	V_{RMS}
		DC voltage	1414	V_{DC}
V_{IOTM}	Maximum transient isolation voltage	V_{TEST} = V_{IOTM}; t = 60s (qualification test)	7070	V_{PK}
		V_{TEST} = 1.2 × V_{IOTM}; t = 1s (100% production test)	8484	V_{PK}
V_{IMP}	Maximum impulse voltage[2]	Tested in air; 1.2/50µs waveform per IEC 62638-1	9230	V_{PK}
V_{IOSM}	Maximum surge isolation voltage[3]	Tested in oil (qualification test); 1.2/50µs waveform per IEC 62638-1	12000	V_{PK}

Copyright © 2025 Texas Instruments Incorporated

5.6 Insulation Specifications (continued)

PARAMETER		TEST CONDITIONS	SPECIFICATION	UNIT
q_{pd}	Apparent charge[4]	Method a: After input-output safety test subgroup 2/3, $V_{ini} = V_{IOTM}$, t_{ini} = 60s; $V_{pd(m)} = 1.2 \times V_{IORM}$, t_m = 10s.	≤ 5	pC
		Method a: After environmental tests subgroup 1, $V_{ini} = V_{IOTM}$, t_{ini} = 60s; $V_{pd(m)} = 1.6 \times V_{IORM}$, t_m = 10s.	≤ 5	
		Method b1: At routine test (100% production test) and preconditioning (type test), $V_{ini} = V_{IOTM}$, t_{ini} = 1s; $V_{pd(m)} = 1.875 \times V_{IORM}$, t_m = 1s.	≤ 5	
C_{IO}	Barrier capacitance, input to output[5]	$V_{IO} = 0.4 \times \sin(2\pi ft)$, f = 1MHz	3	pF
R_{IO}	Insulation resistance, input to output[5]	V_{IO} = 500V, T_A = 25°C	> 10^{12}	Ω
		V_{IO} = 500V, 100°C ≤ T_A ≤ 125°C	> 10^{11}	
		V_{IO} = 500V at T_S = 150°C	> 10^{9}	
	Pollution degree		2	
	Climatic category		40/125/21	
UL 1577				
V_{ISO}	Withstand isolation voltage	$V_{TEST} = V_{ISO} = 5000V_{RMS}$, t = 60s (qualification test), $V_{TEST} = 1.2 \times V_{ISO} = 6000V_{RMS}$, t = 1s (100% production test)	5000	V_{RMS}

(1) Creepage and clearance requirements should be applied according to the specific equipment isolation standards of an application. Care should be taken to maintain the creepage and clearance distance of a board design to ensure that the mounting pads of the isolator on the printed-circuit board do not reduce this distance. Creepage and clearance on a printed-circuit board become equal in certain cases. Techniques such as inserting grooves, ribs, or both on a printed-circuit board are used to help increase these specifications.
(2) Testing is carried out in air to determine the intrinsic surge immunity of the package.
(3) Testing is carried out in oil to determine the intrinsic surge immunity of the isolation barrier.
(4) Apparent charge is electrical discharge caused by a partial discharge (pd).
(5) All pins on each side of the barrier tied together creating a two-pin device.

5.7 Safety-Related Certifications

VDE	UL
Certified according to DIN EN IEC 60747-17 (VDE 0884-17)	Recognized under UL 1577 Component Recognition Program
Reinforced insulation; Maximum transient isolation voltage, $7071V_{PK}$; Maximum repetitive peak isolation voltage, $1414V_{PK}$; Maximum surge isolation voltage, $12000V_{PK}$	Single protection, $5000V_{RMS}$
Certificate number: planned	File number: planned

5.8 Safety Limiting Values

PARAMETER[1] [2]		TEST CONDITIONS	MIN	TYP	MAX	UNIT
I_S	Safety input, output, or supply current	$R_{\theta JA}$ = 89.3°C/W, V_{VDDP} = 5.5V, T_J = 150°C, T_A = 25°C, three-wire mode.			254	mA
		$R_{\theta JA}$ = 89.3°C/W, V_{EN} = 24V, T_J = 150°C, T_A = 25°C, two-wire mode.			58	
		$R_{\theta JA}$ = 89.3°C/W, V_{EN} = 48V, T_J = 150°C, T_A = 25°C, two-wire mode.			29	
P_S	Safety input, output, or total power	$R_{\theta JA}$ = 89.3°C/W, T_J = 150°C, T_A = 25°C.			1.4	W

Copyright © 2025 Texas Instruments Incorporated

5.8 Safety Limiting Values (continued)

PARAMETER(1) (2)		TEST CONDITIONS	MIN	TYP	MAX	UNIT
T_S	Maximum safety temperature				150	°C

(1) Safety limiting intends to minimize potential damage to the isolation barrier upon failure of input or output circuitry. A failure of the I/O can allow low resistance to ground or the supply and, without current limiting, dissipate sufficient power to overheat the die and damage the isolation barrier, potentially leading to secondary system failures.

(2) The safety-limiting constraint is the maximum junction temperature specified in the data sheet. The power dissipation and junction-to-air thermal impedance of the device installed in the application hardware determines the junction temperature. The assumed junction-to-air thermal resistance in the Thermal Information table is that of a device installed on a high-K test board for leaded surface-mount packages. The power is the recommended maximum input voltage times the current. The junction temperature is then the ambient temperature plus the power times the junction-to-air thermal resistance.

5.9 Electrical Characteristics

over operating free-air temperature range (unless otherwise noted). Typicals at T_A = 25°C. C_{VDDP} = 220nF, C_{DIV1} = C_{DIV2} = 3.3nF, C_{VDRV} = 100pF, R_{PXFR} = 7.32kΩ ±1%

PARAMETER		TEST CONDITIONS	MIN	TYP	MAX	UNIT
COMMON						
$V_{VDDP_UV_R}$	VDDP undervoltage threshold rising	VDDP rising	2.50	2.70	2.90	V
$V_{VDDP_UV_F}$	VDDP undervoltage threshold falling	VDDP falling	2.35	2.55	2.75	V
$V_{VDDP_UV_HYS}$	VDDP undervoltage threshold hysterisis			75		mV
TSD	Temperature shutdown			173		°C
TSDH	Temperature shutdown hysteresis			32		°C
$V_{VDDH_UV_R}$	VDDH undervoltage threshold rising	VDDH rising.	8.3	8.6	9.0	V
$V_{VDDH_UV_F}$	VDDH undervoltage threshold falling	VDDH falling.	6.3	6.6	6.9	V
$V_{VDDH_UV_HYS}$	VDDH undervoltage threshold hysterisis			2		V
I_{Q_VDDH}	Internal quiescent current of VDDH supply.			36		µA
R_{DSON_VDRV}	Driver on resistance in low state	Force V_{VDDH} = 10V, sink I_{VDRV} = 50mA.		1.7		Ω
	Driver on resistance in high state	Force V_{VDDH} = 10V, source I_{VDRV} = 50mA.		2.5		Ω
I_{VDRV_PEAK}	VDRV peak output current during rise	V_{VDDH} in steady state, transition EN from low to high, measure peak current.		1.5		A
	VDRV peak output current during fall	V_{VDDH} in steady state, transition EN from high to low, measure peak current.		3		A
CMTI	Common-mode transient immunity	$\|V_{CM}\|$ = 1000V	100			V/ns
TWO-WIRE MODE						
V_{IH_EN}	Minimum voltage on EN to be detected as a valid logic high		6.5			V
V_{IL_EN}	Maximum voltage on EN to be detected as a valid logic low				2.0	V
I_{EN_START}	Enable current at startup	EN = 0V → 6.5V		27		mA

Copyright © 2025 Texas Instruments Incorporated

5.9 Electrical Characteristics (continued)

over operating free-air temperature range (unless otherwise noted). Typicals at T_A = 25°C. C_{VDDP} = 220nF, C_{DIV1} = C_{DIV2} = 3.3nF, C_{VDRV} = 100pF, R_{PXFR} = 7.32kΩ ±1%

PARAMETER		TEST CONDITIONS	MIN	TYP	MAX	UNIT
I_{EN}	Enable current steady state	EN = 6.5V, R_{PXFR} = 7.32kΩ, R_{PXFR} ≥100kΩ or R_{PXFR} ≤1kΩ, V_{VDDH} in steady state.		1.9		mA
		EN = 6.5V, R_{PXFR} = 20kΩ, V_{VDDH} in steady state.		6.8		mA
V_{VDDP_RIPPLE}	VDDP output voltage ripple	EN = 6.5V, V_{VDDH} in steady state.		600		mV
V_{VDDH}	VDDH output voltage	EN = 6.5V, V_{VDDH} in steady state.	9.4	10.2	11	V
V_{VDRV_H}	VDRV output voltage driven high	EN = 6.5V, V_{VDDH} in steady state, no DC loading.	9.4	10.2	11	V
V_{VDRV_L}	VDRV output voltage driven low	EN = 6.5V → 0V, V_{VDDH} in steady state, sink 10mA load.			0.1	V
V_{VDDM_IAUX}	Average VDDM voltage when sourcing external current	EN = 6.5V, steady state. R_{PXFR} = 7.32kΩ, R_{PXFR} ≥ 100kΩ or R_{PXFR} ≤ 1kΩ, C_{DIV1} = C_{DIV2} = 220nF, source 0.4mA from VDDM, measure VDDM voltage.	4.6		5.5	V
		EN = 6.5V, steady state. R_{PXFR} = 20kΩ, C_{DIV1} = C_{DIV2} = 220nF, source 1.7mA from VDDM, measure VDDM voltage.	4.6		5.5	V
THREE-WIRE MODE						
V_{IH_EN}	Minimum voltage on EN to be detected as a valid logic high. $V_{IH(min)}$ = 0.7 × V_{VDDP}	V_{VDDP} = 3V	2.1			V
		V_{VDDP} = 5.5V	3.85			V
V_{IL_EN}	Maximum voltage on EN to be detected as a valid logic low	V_{VDDP} = 3V			0.9	V
		V_{VDDP} = 5.5V			1.65	V
I_{VDDP}	VDDP average current in steady state	EN = 3.3V, V_{VDDP} = 3.3V, R_{PXFR} = 7.32kΩ, R_{PXFR} ≥ 100kΩ or R_{PXFR} ≤ 1kΩ, V_{VDDH} in steady state, measure I_{VDDP}.		3.1		mA
		EN = 3.3V, V_{VDDP} = 3.3V, R_{PXFR} = 20kΩ V_{VDDH} in steady state, measure I_{VDDP}.		26		mA
		EN = 5V, V_{VDDP} = 5V, R_{PXFR} = 7.32kΩ, R_{PXFR} ≥ 100kΩ or R_{PXFR} ≤ 1kΩ, V_{VDDH} in steady state, measure I_{VDDP}.		4.8		mA
		EN = 5V, V_{VDDP} = 5V, R_{PXFR} = 20kΩ, V_{VDDH} in steady state, measure I_{VDDP}.		37		mA

Copyright © 2025 Texas Instruments Incorporated

5.9 Electrical Characteristics (continued)

over operating free-air temperature range (unless otherwise noted). Typicals at T_A = 25°C. C_{VDDP} = 220nF, C_{DIV1} = C_{DIV2} = 3.3nF, C_{VDRV} = 100pF, R_{PXFR} = 7.32kΩ ±1%

PARAMETER		TEST CONDITIONS	MIN	TYP	MAX	UNIT
V_{VDDM_IAUX}	Average VDDM voltage when sourcing external current	V_{VDDP} = 3.3V, EN = 0V, steady state, R_{PXFR} = 7.32kΩ, C_{DIV1} = C_{DIV2} = 220nF, source 0.4mA from VDDM, measure V_{VDDM}.	4.6		5.5	V
		V_{VDDP} = 5.0V, EN = 0V, steady state, R_{PXFR} = 7.32kΩ, C_{DIV1} = C_{DIV2} = 220nF, source 1.0mA from VDDM, measure V_{VDDM}.	4.6		5.5	V
		V_{VDDP} = 3.3V, EN = 0V, steady state, R_{PXFR} =20kΩ, C_{DIV1} = C_{DIV2} = 220nF, source 5.5mA from VDDM, measure V_{VDDM}.	4.6		5.5	V
		V_{VDDP} = 5.0V, EN = 0V, steady state, R_{PXFR} = 20kΩ, C_{DIV1} = C_{DIV2} = 220nF, source 10mA from VDDM, measure V_{VDDM}.	4.6		5.5	V
V_{VDDH}	VDDH output voltage	V_{VDDP} = 3.0V, EN = 3.0V, V_{VDDH} in steady state.	9.4	10.2	11	V
V_{VDRV_H}	VDRV output voltage driven high	V_{VDDP} = 3.0V, EN = 3.0V, V_{VDDH} in steady state, no DC loading.	9.4	10.2	11	V
V_{VDRV_L}	VDRV output voltage driven low	V_{VDDP} = 3.0V, EN = 0V, V_{VDDH} in steady state, VDRV sinking 10mA.			0.1	V

5.10 Switching Characteristics

over operating free-air temperature range (unless otherwise noted). Typicals at T_A = 25°C. C_{VDDP} = 220nF, C_{DIV1} = C_{DIV2} = 3.3nF, C_{VDRV} = 100pF, R_{PXFR} = 7.32kΩ ±1%

PARAMETER		TEST CONDITIONS	MIN	TYP	MAX	UNIT
TWO-WIRE MODE						
t_{LO_EN}	Low time of EN		5			µs
t_{LH_VDDH}	Propagation delay time from EN rising to VDDH at 50% level	EN = 0V → 6.5V, V_{VDDH} = 5.0V.		90		µs
t_{LH_VDRV}	Propagation delay time from EN rising to VDRV at 90% level	EN = 0V → 6.5V, V_{VDRV} = 9.0V.		260		µs
t_{HL_VDRV}	Propagation delay time from EN falling to VDRV at 10% level	EN = 6.5V → 0V, V_{VDRV} = 1.0V.		2.4	3	µs
t_{R_VDRV}	VDRV rise time from EN rising to VDRV from 15% to 85% level	EN = 0V → 6.5V, V_{VDRV} = 1.5V to 8.5V.		6		ns
t_{F_VDRV}	VDRV fall time from EN falling to VDRV from 85% to 15% level	EN = 6.5V → 0V, V_{VDRV} = 8.5V to 1.5V.		5		ns
THREE-WIRE MODE						

Copyright © 2025 Texas Instruments Incorporated

5.10 Switching Characteristics (continued)

over operating free-air temperature range (unless otherwise noted). Typicals at T_A = 25°C. C_{VDDP} = 220nF, C_{DIV1} = C_{DIV2} = 3.3nF, C_{VDRV} = 100pF, R_{PXFR} = 7.32kΩ ±1%

PARAMETER		TEST CONDITIONS	MIN	TYP	MAX	UNIT
t_{LO_EN}	Low time of EN	V_{VDDP} = 3.3V, steady state.	5			µs
t_{HI_EN}	High time of EN	V_{VDDP} = 3.3V, steady state.	5			µs
t_{LH_VDDH}	Propagation delay time from VDDP rising to VDDH at 50% level	EN = 0V, V_{VDDP} = 0V → 3.3V at 1V/µs, V_{VDDH} = 5.0V.		74		µs
t_{LH_VDRV}	Propagation delay time from EN rising to VDRV at 90% level	V_{VDDP} = 3.3V, V_{VDDH} steady state, EN = 0V → 3.3V, V_{VDRV} = 9.0V.		3	4.5	µs
t_{HL_VDRV}	Propagation delay time from EN falling to VDRV at 10% level	V_{VDDP} = 3.3V, V_{VDDH} steady state, EN = 3.3V → 0V, V_{VDRV} = 1.0V.		2.5	3	µs
$t_{HL_VDRV_PD}$	Propagation delay time from VDDP falling to VDRV at 10% level. Timeout mechanism due to loss of power on primary supply.	EN = 3.3V, V_{VDDH} steady state, V_{VDDP} = 3.3V → 0V at –1V/µs, V_{VDRV} = 1.0V.		100		µs
t_{R_VDRV}	VDRV rise time from EN rising to VDRV from 15% to 85% level	V_{VDDP} = 3.3V, V_{VDDH} steady state, EN = 0V → 3.3V, V_{VDRV} = 1.5V to 8.5V.		6		ns
t_{F_VDRV}	VDRV fall time from EN falling to VDRV from 85% to 15% level	V_{VDDP} = 3.3V, V_{VDDH} steady state, EN = 3.3V → 0V, V_{VDRV} = 8.5V to 1.5V.		5		ns

Copyright © 2025 Texas Instruments Incorporated

5.11 Insulation Characteristic Curves

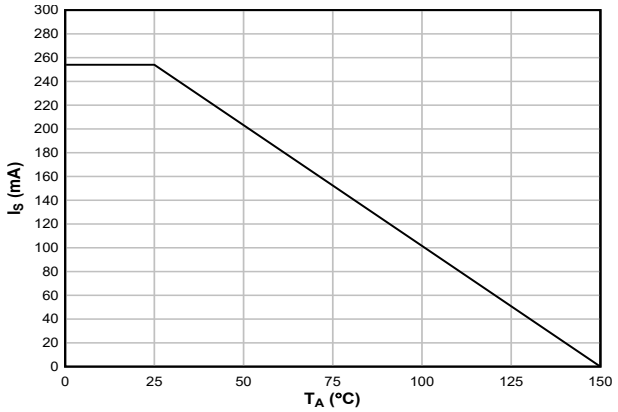

Figure 5-1. Thermal Derating Curve for Limiting Current per VDE and IEC, Three-Wire Mode

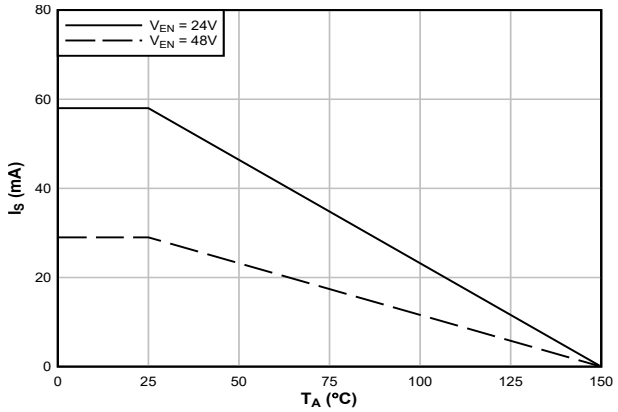

Figure 5-2. Thermal Derating Curve for Limiting Current per VDE and IEC, Two-Wire Mode

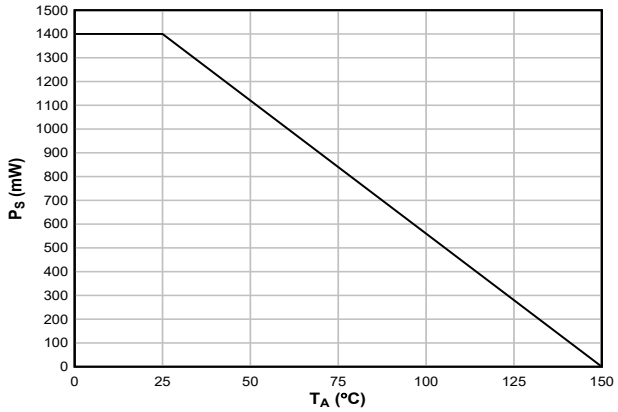

Figure 5-3. Thermal Derating Curve for Limiting Power per VDE and IEC

5.12 Typical Characteristics

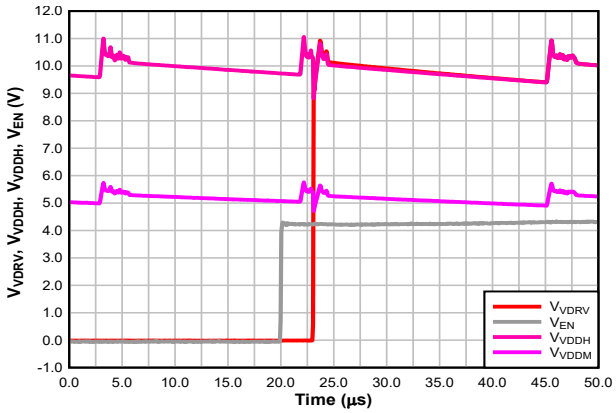

Three-wire mode | VDDP = 5.0V | R_{PXFR} = 7.32kΩ
$C_{DIV1,2}$ = 3.3nF | C_{VDRV} = 100pF | T_A = 25°C

Figure 5-4. t_{LH_VDRV}, Three-Wire Mode

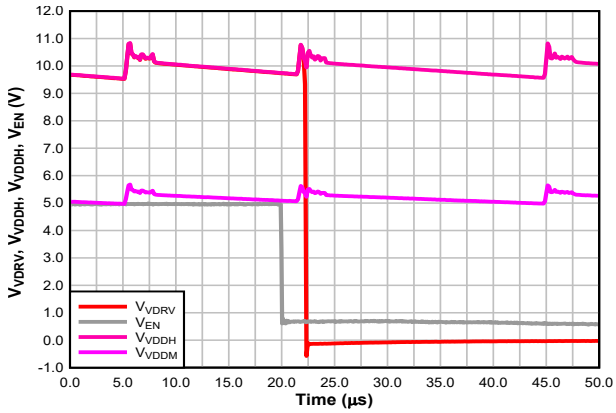

Three-wire mode | VDDP = 5.0V | R_{PXFR} = 7.32kΩ
$C_{DIV1,2}$ = 3.3nF | C_{VDRV} = 100pF | T_A = 25°C

Figure 5-5. t_{HL_VDRV}, Three-Wire Mode

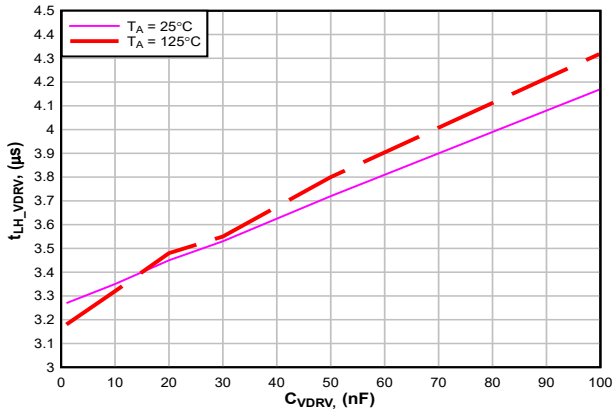

Three-wire mode | VDDP = 3.3V | R_{PXFR} = 7.32kΩ
C_{DIV1} = 2.2µF | C_{DIV2} = 2.2µF

Figure 5-6. t_{LH_VDRV} vs C_{VDRV}

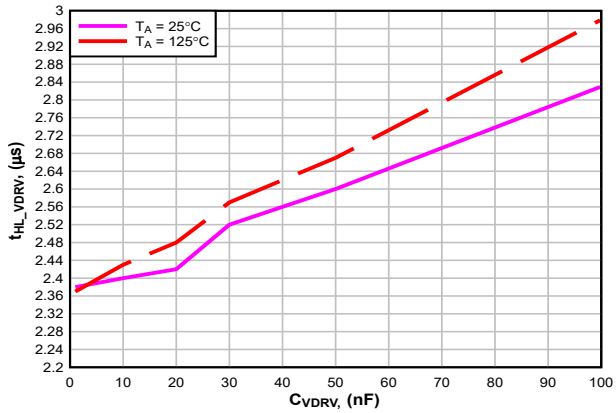

Three-wire mode | VDDP = 3.3V | R_{PXFR} = 7.32kΩ
C_{DIV1} = 2.2µF | C_{DIV2} = 2.2µF

Figure 5-7. t_{HL_VDRV} vs C_{VDRV}

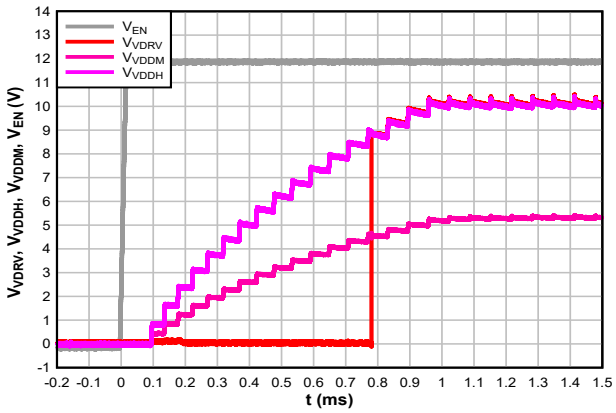

Two-wire mode | EN = 12V | R_{PXFR} = 7.32kΩ
C_{DIV1} = 30nF | C_{VDRV} = 100pF | T_A = 25°C
C_{DIV2} = 100nF

Figure 5-8. t_{LH_VDRV}, Two-Wire Mode

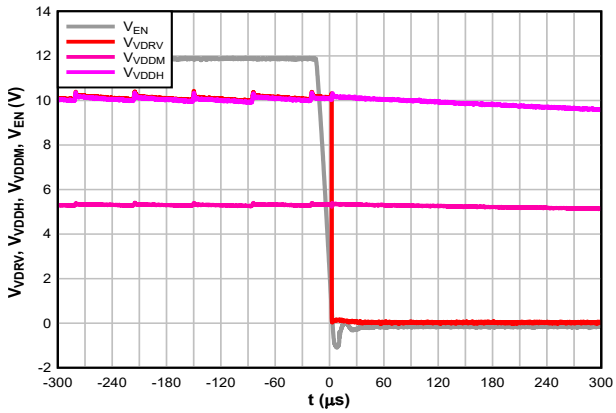

Two-wire mode | EN = 12V | R_{PXFR} = 7.32kΩ
C_{DIV1} = 30nF | C_{VDRV} = 100pF | T_A = 25°C
C_{DIV2} = 100nF

Figure 5-9. t_{HL_VDRV}, Two-Wire Mode

Copyright © 2025 Texas Instruments Incorporated

5.12 Typical Characteristics (continued)

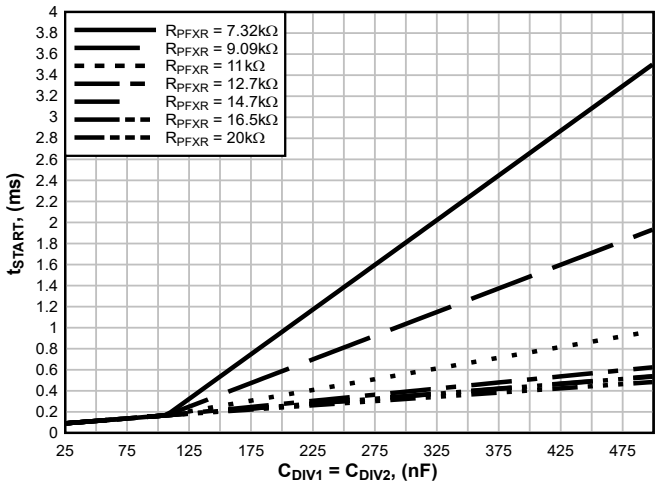

t_{START} represents the time from VDDP rising to VDDM and VDDH fully discharged rails reaching >95% of their final levels.

Three-wire mode VDDP = 5.0V T_A = 25°C

I_{AUX} = 0mA

Figure 5-10. t_{START} vs C_{DIV1}, C_{DIV2}

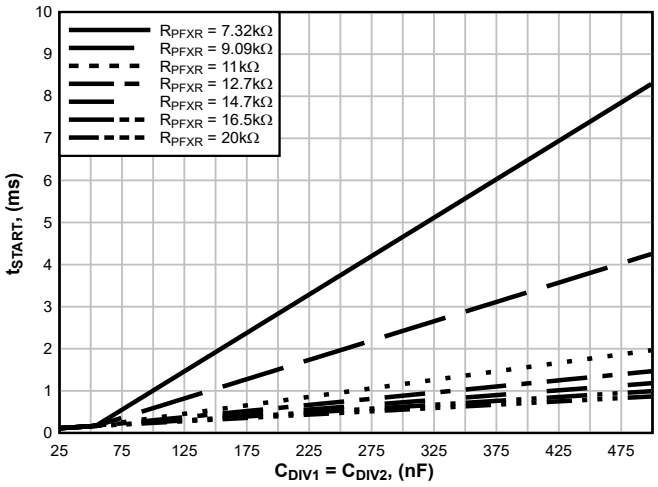

t_{START} represents the time from VDDP rising to VDDM and VDDH fully discharged rails reaching >95% of their final levels.

Three-wire mode VDDP = 3.3V T_A = 25°C

I_{AUX} = 0mA

Figure 5-11. t_{START} vs C_{DIV1}, C_{DIV2}

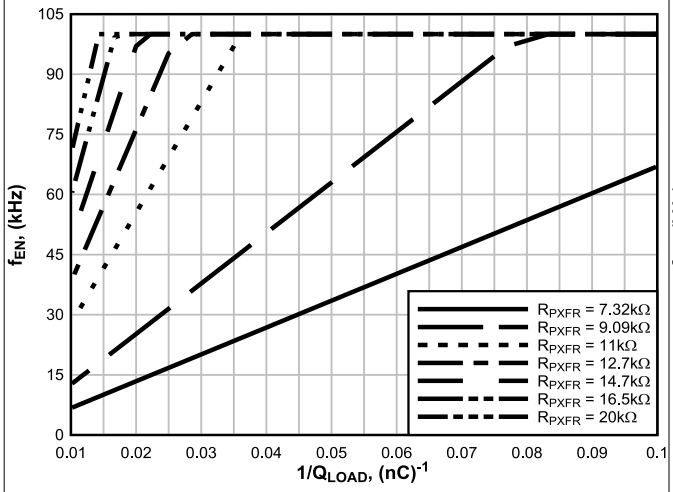

Three-wire mode VDDP = 5.0V T_A = 25°C

Figure 5-12. Max. f_{EN} vs Q_{LOAD} = 10nC to 100nC

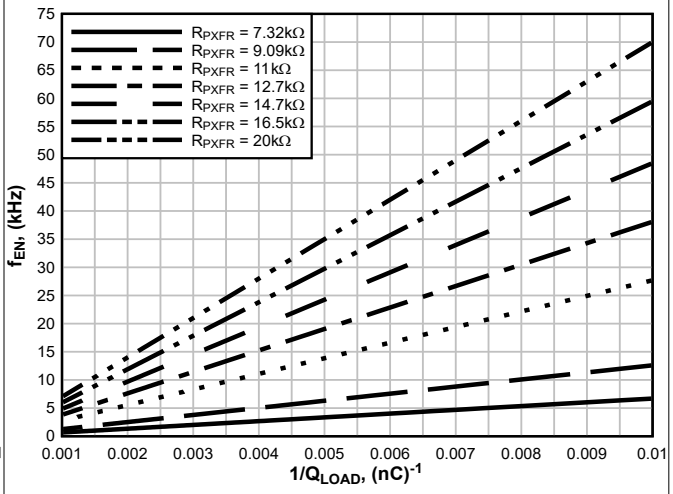

Three-wire mode VDDP = 5.0V T_A = 25°C

Figure 5-13. Max. f_{EN} vs Q_{LOAD} = 100nC to 1000nC

5.12 Typical Characteristics (continued)

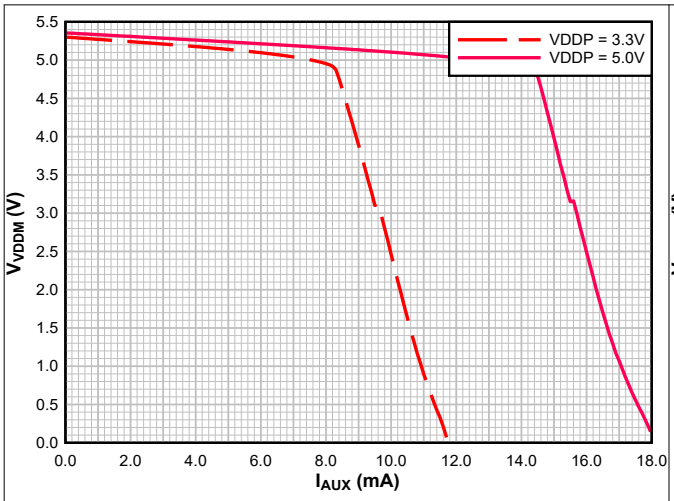

Three-wire mode | R_{PXFR} = 20kΩ | T_A = 25°C
C_{DIV1} = 470nF | C_{DIV2} = 470nF | C_{VDDP} = 1µF

Figure 5-14. V_{VDDM} vs I_{AUX}

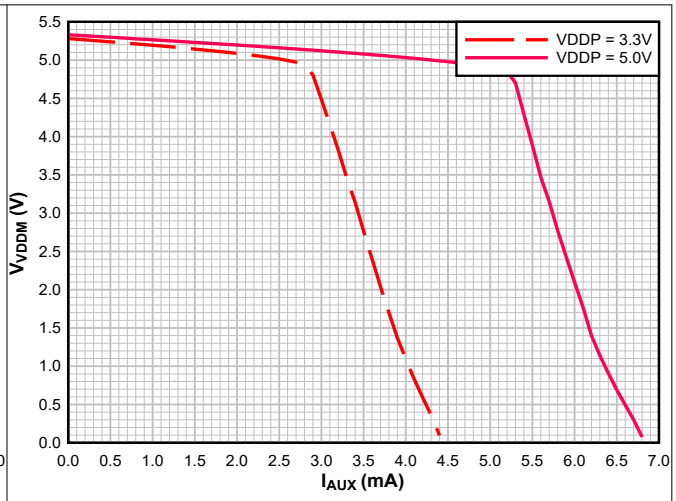

Three-wire mode | R_{PXFR} = 11kΩ | T_A = 25°C
C_{DIV1} = 470nF | C_{DIV2} = 470nF | C_{VDDP} = 1µF

Figure 5-15. V_{VDDM} vs I_{AUX}

Copyright © 2025 Texas Instruments Incorporated

6 Parameter Measurement Information

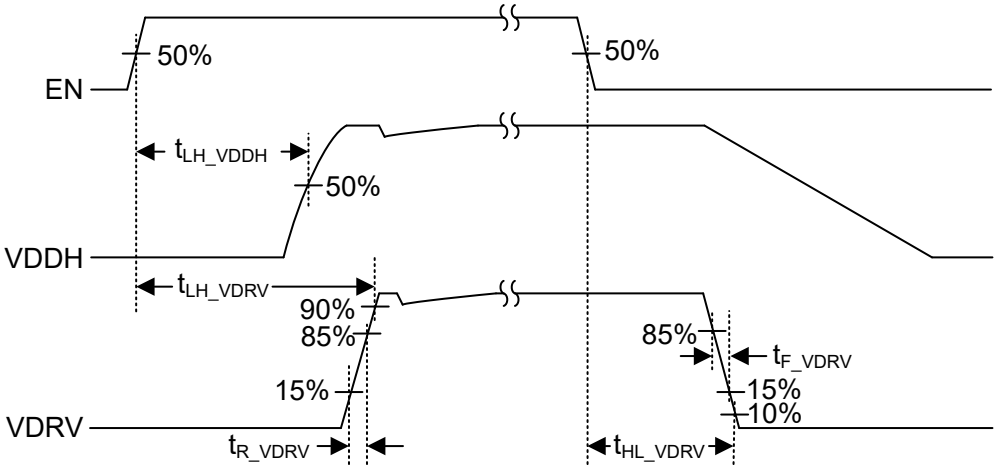

Figure 6-1. Two-Wire Mode Timing

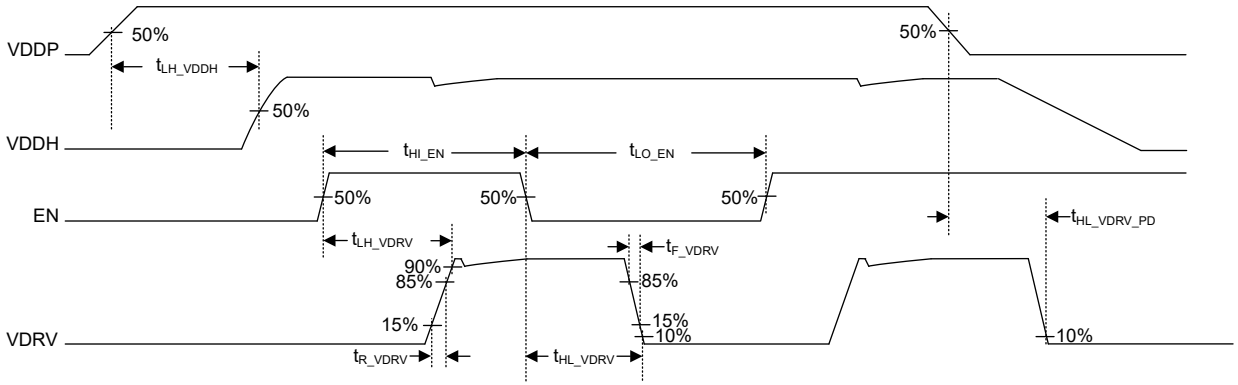

Figure 6-2. Three-Wire Mode Timing

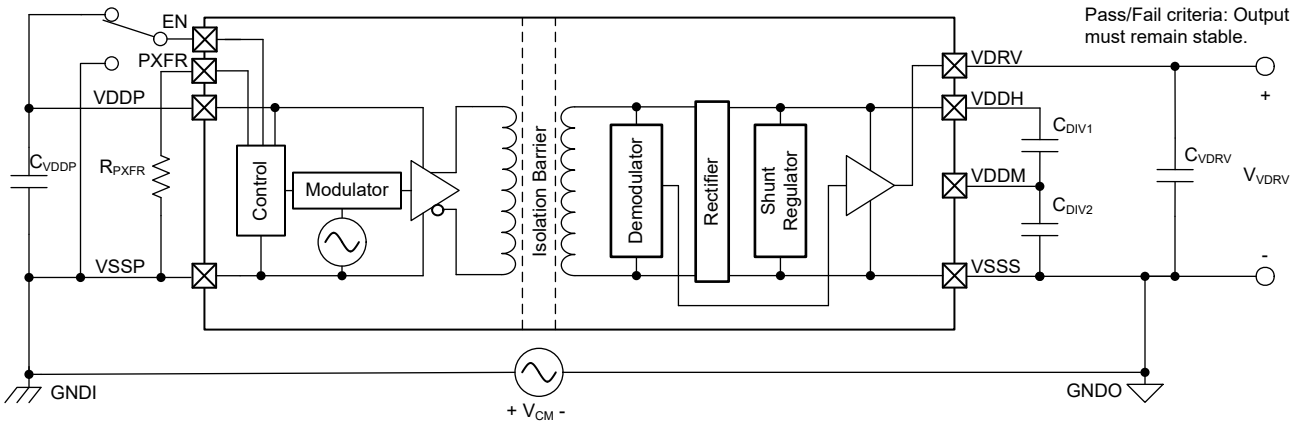

Figure 6-3. Common-Mode Transient Immunity Test Circuit

7 Detailed Description

7.1 Overview

The TPSI3050M is a fully integrated, reinforced isolated power switch driver, which when combined with an external power switch, forms a complete isolated Solid State Relay (SSR). With a nominal gate drive voltage of 10V and 1.5A and 3.0A peak source and sink current, a large variety of external power switches can be chosen to meet a wide range of applications. The TPSI3050M generates its own secondary supply from the power received from its primary side, so no isolated secondary bias supply is required.

The *Functional Block Diagram* shows the primary side that includes a transmitter that drives an alternating current into the primary winding of an integrated transformer at a rate determined by the setting of the PXFR pin and the logic state of the EN pin. The transmitter operates at high frequency to optimally drive the transformer to its peak efficiency. In addition, the transmitter uses spread spectrum techniques to greatly improve EMI performance, allowing many applications to achieve CISPR 25 - Class 5. During transmission, data information transfers to the secondary side alongside with the power. On the secondary side, the voltage induced on the secondary winding of the transformer is rectified, and the shunt regulator regulates the output voltage level of VDDH. Lastly, the demodulator decodes the received data information and drives VDRV high or low based on the logic state of the EN pin.

7.2 Functional Block Diagram

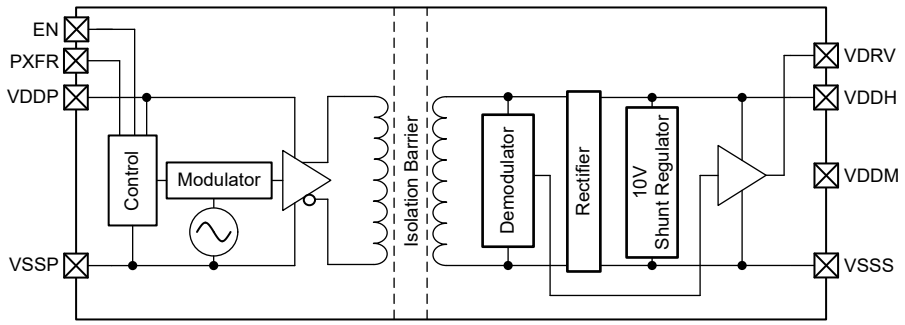

7.3 Feature Description

7.3.1 Transmission of the Enable State

The TPSI3050M uses a modulation scheme to transmit the switch enable state information across the isolation barrier. The transmitter modulates the EN signal with an internally generated, high frequency carrier (89MHz typical), and differentially drives the primary winding of the isolation transformer. The receiver on the secondary side demodulates the received signal and asserts VDRV high or low based on the data received.

7.3.2 Power Transmission

The TPSI3050M does not use an isolated supply for its power. The secondary side power is obtained by the transferring of the primary side input power across the isolation transformer. The modulation scheme uses spread spectrum of the high frequency carrier (89MHz typical) to improve EMI performance assisting applications in meeting the CISPR 25 Class 5 standards.

7.3.3 Gate Driver

The TPSI3050M has an integrated gate driver that provides a nominal 10V gate voltage with 1.5A and 3.0A peak source and sink current sufficient for driving many power transistors or Silicon-Controlled Rectifiers (SCR). When driving external power transistors, TI recommends bypass capacitors (C_{DIV} = C_{DIV1} = C_{DIV2}) from VDDH to VDDM and VDDM to VSSS of 20 times the equivalent gate capacitance.

The gate driver also includes an active clamp keep off circuit. This feature helps to keep the driver output, VDRV, low should power be lost on the secondary supply rails e.g. power loss on the VDDP supply prevents power transfer. Should power be lost, the active clamp keep off circuit will attempt to clamp the voltage of VDRV to under 2V relative to VSSS.

Copyright © 2025 Texas Instruments Incorporated

7.3.4 Modes Overview

The TPSI3050M has two modes of operation: two-wire mode and three-wire mode.

In two-wire mode, the power on the primary side is provided directly by the EN pin. Setting EN high causes power transfer to the secondary side. As power transfers, the secondary rails, VDDM and VDDH, begin to rise. After sufficient power is available on the secondary side, VDRV is asserted high. Setting EN low causes VDRV to assert low and halts power transfer to the secondary side.

In three-wire mode, the power on the primary side is provided by a dedicated, low output impedance supply connected to VDDP. In this case, power transfer is independent from the enable state. If VDDP power is present, power is transferred from the primary side to the secondary side regardless of the EN state. In steady state conditions, when sufficient power is available on the secondary side, setting EN high causes VDRV to assert high. Setting EN low causes VDRV to assert low.

7.3.5 Three-Wire Mode

Three-wire mode is used for applications that require higher levels of power transfer or the shortest propagation delay TPSI3050M can offer. VDDP is supplied independently from the EN pin by a low output impedance external supply that can deliver the required power. In this mode, power from the primary side to the secondary side always occurs regardless of the state of the EN pin. Setting the EN pin logic high or low asserts or de-asserts VDRV, thereby enabling or disabling the external switch, respectively. Figure 7-1 shows the basic setup required for three-wire mode operation which requires EN, VDDP, and VSSP signals. EN can be driven up to 5.5V which is normally driven from the circuitry residing on the same rail as VDDP. In this example, the TPSI3050M is being used to drive back-to-back MOSFETs in a common-source configuration. C_{VDDP} provides the required decoupling capacitance for the VDDP supply rail of the device. C_{DIV1} and C_{DIV2} provide the required decoupling capacitances of the VDDH and VDDM supply rails that provide the peak current to drive the external MOSFETs.

Figure 7-2 shows the basic operation from start-up to steady-state conditions. Figure 7-2 shows operation using the TPSI3050M. After power up, the TPSI3050M begins to transfer power from VDDP to the secondary side for a fixed time period (25µs typical) at a duty cycle rate determined by R_{PXFR}, which begins to charge up the VDDH (and VDDM) secondary side rails. Power transfer continues as long as VDDP is present. The time required to fully charge VDDH depends on several factors including the values of VDDP, C_{DIV1}, C_{DIV2}, R_{PXFR}, and the overall power transfer efficiency. When the application drives the EN pin to a logic high, the TPSI3050M signals information from the primary side to the secondary side to assert VDRV and drive it high. Similarly, setting EN pin to a logic low causes VDRV to be driven low.

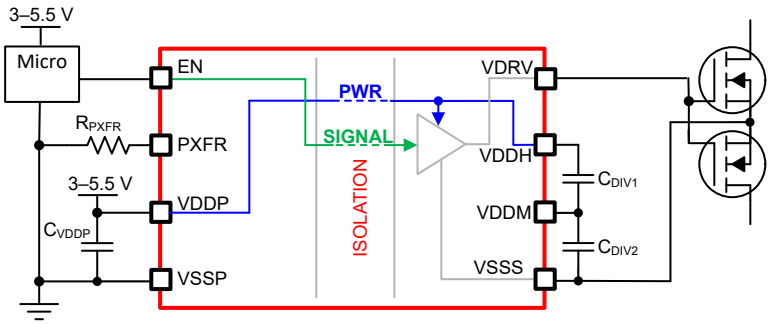

Figure 7-1. Three-Wire Mode Simplified Schematic

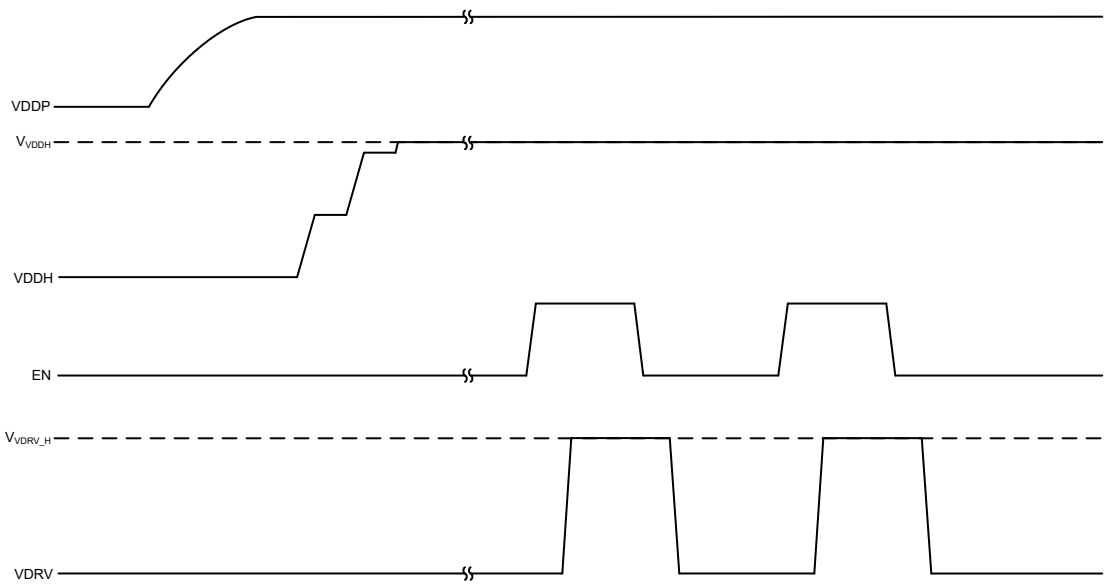

Figure 7-2. Three-Wire Mode With TPSI3050M

To reduce average power, the TPSI3050M transfers power from the primary side to the secondary side in a burst fashion. The period of the burst is fixed while the burst on time is programmable by selecting one of seven appropriate resistor values, R_{PXFR}, from the PXFR to VSSP pins, thereby changing the duty cycle of the power converter. This action provides flexibility in the application, allowing tradeoffs in power consumed versus power delivered. Higher power converter settings increase the burst on time which, in turn, increases average power consumed from the VDDP supply and increases the amount of power transferred to the secondary side VDDH and VDDM supplies. Similarly, lower power converter settings decrease the burst on time which, in turn, decreases average power consumed from the VDDP supply and decreases the amount of power transferred to the secondary side.

Table 7-1 summarizes the three-wire mode power transfer selection.

Table 7-1. Three-Wire Mode Power Transfer Selection

R_{PXFR} (1) (2)	POWER CONVERTER DUTY CYCLE (THREE-WIRE MODE, NOMINAL)	DESCRIPTION
7.32kΩ	13.3%	The device supports seven, fixed power transfer settings, by selection of a corresponding R_{PXFR} value . Selecting a given power transfer setting adjusts the duty cycle of the power converter and hence the amount of power transferred. Higher power transfer settings leads to an increased duty cycle of the power converter leading to increased power transfer and consumption. During power up, the power transfer setting is determined and remains fixed at that setting until VDDP power cycles.
9.09kΩ	26.7%	
11kΩ	40.0%	
12.7kΩ	53.3%	
14.7kΩ	66.7%	
16.5kΩ	80.0%	
20kΩ	93.3%	

(1) Standard resistor (EIA E96), 1% tolerance, nominal value.
(2) $R_{PXFR} \geq 100k\Omega$ or $R_{PXFR} \leq 1k\Omega$ sets the duty cycle of the power converter to 13.3%.

7.3.6 Two-Wire Mode

Figure 7-3 shows the basic setup required for two-wire mode operation, which requires the EN signal and VSSP ground signal. EN can be driven up to 48V. No current limiting resistor is required on EN because the TPSI3050M limits the input current based on the values set by the R_{PXFR} resistor (see Table 7-2). In this example, the TPSI3050M is being used to drive back-to-back MOSFETs in a common-source configuration. C_{VDDP} provides the required decoupling capacitance for the VDDP supply rail of the device. C_{DIV1} and C_{DIV2} provide the required decoupling capacitance of the VDDH and VDDM supply rails that provide the peak current to drive the external MOSFETs.

Copyright © 2025 Texas Instruments Incorporated

Figure 7-4 shows the typical operation in two-wire mode. The application drives EN to a logic high and the TPSI3050M begins its power-up sequence. During power up, the current provided by the EN pin, I_{EN}, begins to charge up the external capacitance, C_{VDDP}, and the voltage on VDDP begins to rise until it reaches V_{VDDP_H}. After VDDP reaches its peak, V_{VDDP_H}, the TPSI3050M transfers stored energy on C_{VDDP} to the secondary side for a fixed time (3.3µs typical) which begins to charge up the VDDH (and VDDM) secondary side rails thereby discharging the voltage on VDDP. In steady state, this results in an average voltage on VDDP, V_{VDDP_AVG}. This cycle repeats until the VDDH (and VDDM) secondary side rails are fully charged. The time required to fully charge VDDH depends on several factors including the values of C_{VDDP}, C_{DIV1}, C_{DIV2}, R_{PXFR}, and the overall power transfer efficiency. After VDDH is fully charged, VDRV is asserted high and remains high while the EN pin remains at a logic high. When the application drives the EN pin to a logic low, the charge on VDDP begins to discharge. Prior to VDDP reaching its UVLO falling threshold, TPSI3050M signals information from the primary side to the secondary side to deassert VDRV and drive it low. Because power is no longer being transferred, all rails begin to fully discharge.

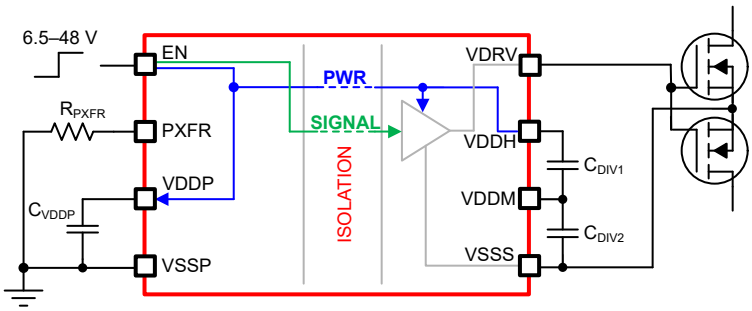

Figure 7-3. Two-Wire Mode Simplified Schematic

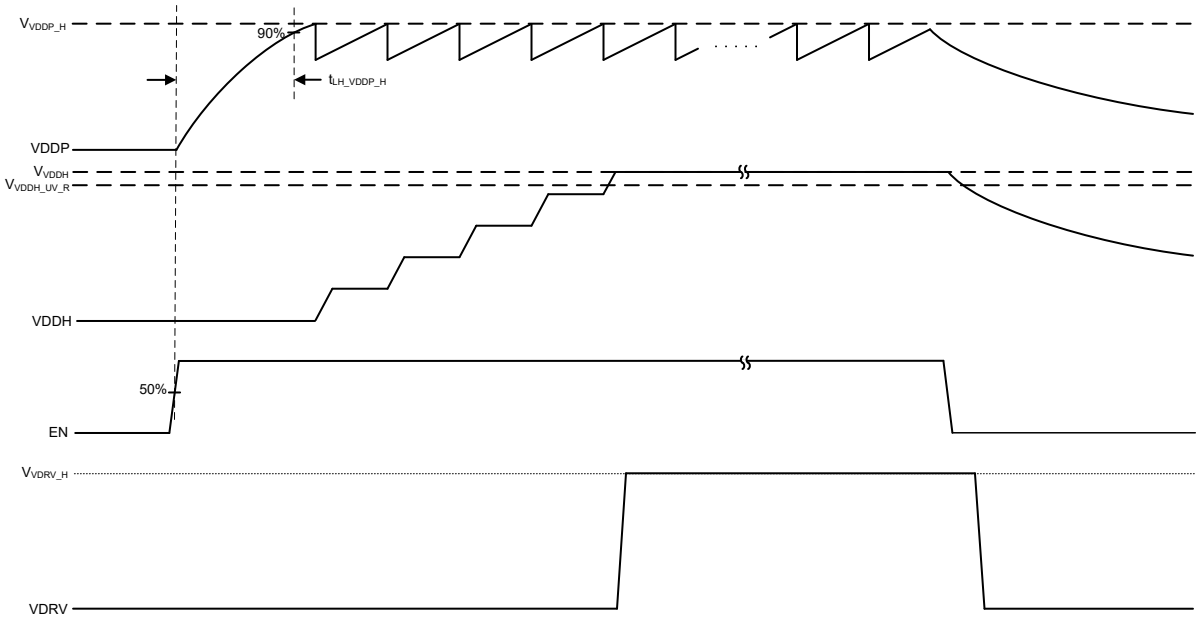

Figure 7-4. Two-Wire Mode

In two-wire mode, power is supplied directly by the EN pin. When EN is asserted high, the TPSI3050M transfers power to the secondary side for a fixed time (3.3µs nominal) while the time period varies. The period varies due to the hysteretic control of the power transfer that ensures the average current supplied through the EN pin is maintained. The amount of average current, and hence the amount of power transferred, is programmable by selecting one of seven appropriate resistor values, R_{PXFR}, from the PXFR to VSSP pins. Higher settings of R_{PXFR} increase I_{EN} which increases the average power consumed from the EN pin and increases the amount of power transferred to the secondary side VDDH supply. Similarly, lower settings of R_{PXFR} decrease I_{EN}, which

Copyright © 2025 Texas Instruments Incorporated

decreases the average power consumed from the EN pin and decreases the amount of power transferred to the secondary side.

Table 7-2 summarizes the two-wire mode power selection.

Table 7-2. Two-Wire Mode Power Selection

R_{PXFR} (1) (2)	I_{EN} (TWO-WIRE MODE, NOMINAL)	DESCRIPTION
7.32kΩ	1.9mA	The device supports seven, fixed EN input current limit options selected by the corresponding R_{PXFR} specified value. Higher current limit selections lead to increased power transfer and consumption. During power up, the EN input current limit is determined and remains fixed at that setting until VDDP power cycles.
9.09kΩ	2.8mA	
11kΩ	3.7mA	
12.7kΩ	4.5mA	
14.7kΩ	5.2mA	
16.5kΩ	6.0mA	
20kΩ	6.7mA	

(1) Standard resistor (EIA E96), 1% tolerance, nominal value.
(2) R_{PXFR} ≥ 100kΩ or R_{PXFR} ≤ 1kΩ sets the I_{EN} to 1.9mA.

7.3.7 VDDP, VDDH, and VDDM Undervoltage Lockout (UVLO)

TPSI3050M implements an internal UVLO protection feature for both input and output power supplies, VDDP, VDDH, and VDDM. When VDDP is lower than the UVLO threshold voltage, power ceases to be transferred to the VDDM and VDDH rails. Over time the VDDH and VDDM rails will begin to discharge. If enough charge is available on VDDP, the device will attempt to signal VDRV to assert low. If not enough charge is available on VDDP, a timeout mechanism will ensure VDRV asserts low after the timeout has been reached. When either VDDH or VDDM are lower than their respective UVLO thresholds, VDRV will be asserted low regardless of the EN state. The UVLO protection blocks feature hysteresis, which helps to improve the noise immunity of the power supply. During turn-on and turn-off, the driver sources and sinks a peak transient current, which can result in voltage drop of the VDDH, VDDM power supplies. The internal UVLO protection block ignores the associated noise during these normal switching transients.

7.3.8 Keep-Off Circuitry

The TPSI3050M contains keep-off circuitry on the output driver. The purpose of the keep-off circuitry is to clamp the gate voltage below an acceptable level to prevent the external power switch from turning on when no power is present on the secondary rails. The keep-off circuitry can be used to replace or greatly reduce the requirements of an external bleed-off resistor on the external power switch.

Figure 7-5 shows a simplified schematic of the keep-off circuitry. Transistors MP1 and MN1 form the driver that provides the gate current to drive the external power switch (M1). When no power is available on the secondary, the 1MΩ resistor, is connected from the drain to gate of MN1, forming an NMOS diode configuration. Any external coupling into the VDRV signal, via the M1 parasitic gate-to-drain and gate-to-source capacitances, can cause the VDRV signal to rise. The diode configuration of MN1 sinks this current to keep VDRV from rising too high, clamping VDRV to V_{ACT_CLAMP} . This is sufficient to keep most power switches off. If desired, an additional resistance can also be placed (on the order of 250kΩ or higher) across the gate-to-source of M1. Note that any resistance applied requires power from the secondary supply in normal operation and must be accounted for in the overall power budget.

In addition to the MN1 diode clamp, the body diode of MP1 can also help absorb any coupling into VDRV. The equivalent capacitance, C_{eq}, which is the series combination of C_{DIV1} and C_{DIV2} is typically on the order of hundreds of nanofarads for most applications. If power transfer has ceased for some time, this capacitance is fully discharged to VSSS and clamps VDRV a diode above VSSS via the body diode of MP1 connected to VDDH. Any external coupling into the VDRV signal, via the M1 parasitic gate-to-drain and gate-to-source capacitances, is absorbed by C_{eq}, minimizing the voltage rise on VDRV.

Copyright © 2025 Texas Instruments Incorporated

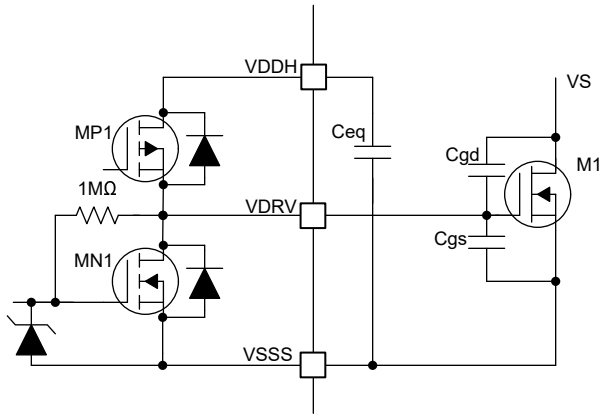

Figure 7-5. Keep-Off Circuitry

7.3.9 Power Supply and EN Sequencing

During power up, the device will automatically determine if two-wire or three-wire mode is to be entered. Once two-wire or three-wire mode is determined, the mode is maintained until another power cycle is performed. Therefore, it is important to understand different scenarios that may affect the device operation.

In two-wire mode, the device is supplied power from a single external voltage source via EN, which charges the C_{VDDP} capacitance on VDDP. The voltage supply is required to meet the power supply needs at the selected PXFR setting, as well as, meet the recommended minimum ramp time, $|\Delta V_{EN}/\Delta t|$. To ensure two-wire mode is entered properly, V_{EN} must reach V_{IH_EN} prior to V_{VDDP} reaching $V_{VDDP_UV_R}$. This is summarized in Figure 7-6. Similarly, it is recommend that V_{EN} meet the minimum recommended ramp down time to V_{IL_EN}. Too slow a ramp down time may cause insufficient power to be transferred while slowly transitioning between V_{IH_EN} and V_{IL_EN} leading to intermittent de-assertions and assertions of VDRV. This may continue until the power transfer reduces sufficiently to maintain VDRV low.

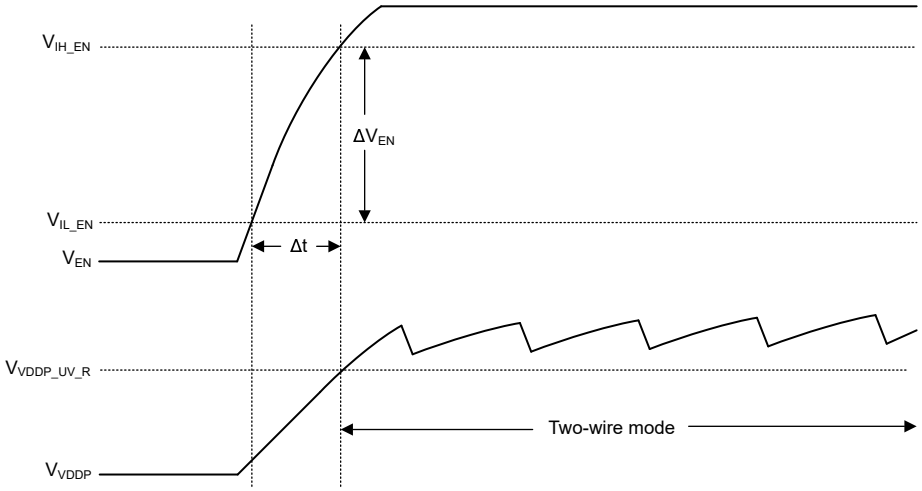

Figure 7-6. Two-wire Mode Entry

In most three-wire mode applications, EN and VDDP are supplied by the same voltage rail and source. It is recommended that V_{EN} remain below V_{IL_EN} until V_{VDDP} reaches $V_{VDDP_UV_R}$. It is also possible in some applications to connect EN directly to the VDDP supply. These two scenarios are shown in Figure 7-7.

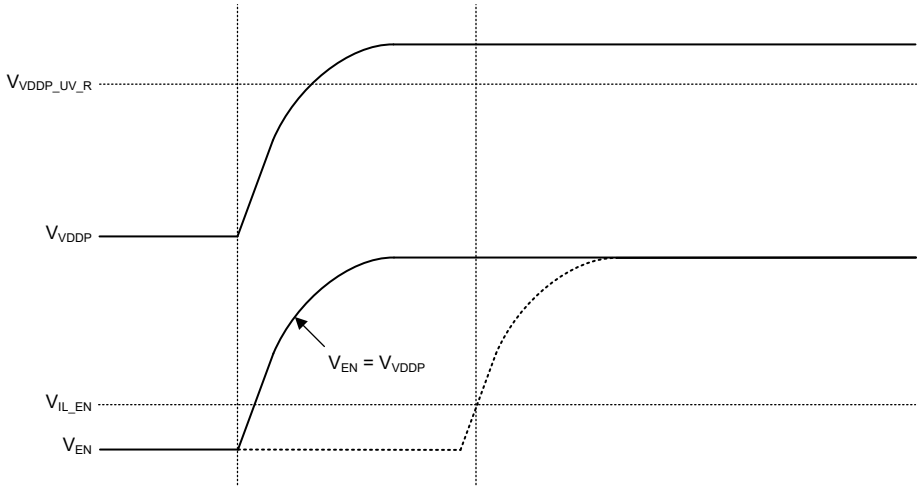

Figure 7-7. Three-wire Mode Power Sequences

In three-wire mode applications with separate voltage sources supplying EN and VDDP, it is recommended that V_{EN} remain below V_{IL_EN} until V_{VDDP} reaches $V_{VDDP_UV_R}$. If V_{EN} reaches V_{IH_EN} prior to V_{VDDP} reaching $V_{VDDP_UV_R}$, current from the supply that sources EN will attempt to power VDDP. Depending on the other supply's impedance residing on VDDP and the amount of power available from the EN pin, V_{VDDP} may begin to rise and eventually exceed $V_{VDDP_UV_R}$. At that point, the device will begin to transfer power to the secondary and start charging the VDDM and VDDH rails. If VDDP remains above $V_{VDDP_UV_R}$, the device will continue to transfer power to the secondary eventually charging the VDDM and VDDH rails and VDRV may assert high.

7.3.10 Thermal Shutdown

The device contains an integrated temperature sensor to monitor its local temperature. When the sensor reaches its threshold, it automatically ceases power transfer from the primary side to the secondary side. In addition, if power is still present on VDDP, the driver is automatically asserted low. The power transfer is disabled until the local temperature reduces enough to re-engage.

Copyright © 2025 Texas Instruments Incorporated

7.4 Device Functional Modes

Table 7-3 summarizes the functional modes for the TPSI3050M.

Table 7-3. TPSI3050M Device Functional Modes

VDDP[6]	VDDH	EN[6]	VDRV	COMMENTS
Powered up[2]	Powered up[4]	L	L	TPSI3050M normal operation: VDRV output state assumes logic state of EN logic state.
		H	H	
Powered down[3]	Powered down[5]	X[1]	L	Disabled operation: VDRV output disabled, keep off circuitry applied.
Powered up[2]	Powered down[5]	X[1]	L	Disabled operation: VDRV output disabled, keep off circuitry applied.
Powered down[3]	Powered up[4]	X[1]	L	Disabled operation: when VDDP is powered down, output driver is disabled automatically after timeout, keep off circuitry applied.

(1) X: do not care.
(2) V_{VDDP} ≥ VDDP undervoltage lockout rising threshold, $V_{VDDP_UV_R}$.
(3) V_{VDDP} < VDDP undervoltage lockout falling threshold, $V_{VDDP_UV_F}$.
(4) V_{VDDH} ≥ VDDH undervoltage lockout rising threshold, $V_{VDDH_UV_R}$.
(5) V_{VDDH} < VDDH undervoltage lockout falling threshold, $V_{VDDH_UV_F}$.
(6) Refer to Power Supply and EN Sequencing for additional information.

Copyright © 2025 Texas Instruments Incorporated

8 Application and Implementation

Note

Information in the following applications sections is not part of the TI component specification, and TI does not warrant its accuracy or completeness. TI's customers are responsible for determining suitability of components for their purposes, as well as validating and testing their design implementation to confirm system functionality.

8.1 Application Information

The TPSI3050M is a fully integrated, isolated switch driver with integrated bias, which when combined with an external power switch, forms a complete isolated solid state relay solution. With a nominal gate drive voltage of 10V with 1.5A and 3.0A peak source and sink current, a large variety of external power switches such as MOSFETs, IGBTs, or SCRs can be chosen to meet a wide range of applications. The TPSI3050M generates its own secondary bias supply from the power received from its primary side, so no isolated secondary supply bias is required.

The TPSI3050M supports two modes of operation based on the number of input pins required. In two-wire mode, typically found in driving mechanical relays, controlling the switch requires only two pins and supports a wide voltage range of operation of 6.5V to 48V. In three-wire mode, the primary supply of 3V to 5.5V is supplied externally, and the switch is controlled through a separate enable.

The secondary side provides a regulated, floating supply rail of 10V for driving a large variety of power switches with no need for a secondary bias supply. The TPSI3050M can support driving single power switch, dual back-to-back, parallel power switches for a variety of AC or DC applications. The TPSI3050M integrated isolation protection is extremely robust with much higher reliability, lower power consumption, and increased temperature ranges than those found using traditional mechanical relays and optocouplers.

The power dissipation of the TPSI3050M can be adjusted by an external resistor from the PXFR pin to VSSP. This feature allows for tradeoffs in power dissipation versus power provided on the secondary depending on the needs of the application.

8.2 Typical Application

The circuits in Figure 8-1 and Figure 8-2 show a typical application for driving silicon based MOSFETs in three-wire mode and two-wire mode, respectively.

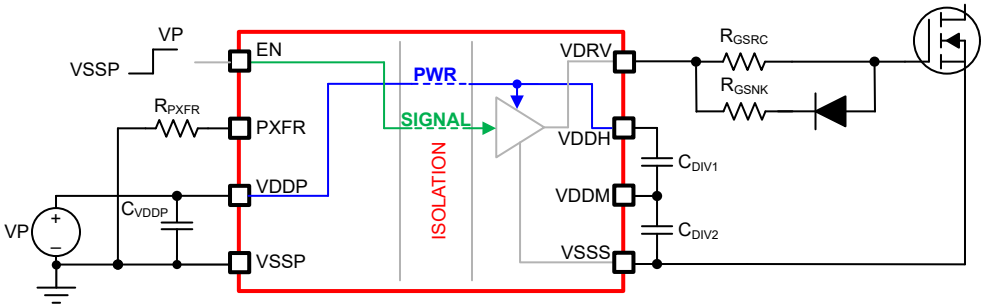

Figure 8-1. TPSI3050M Three-Wire Mode Driving MOSFETs

Copyright © 2025 Texas Instruments Incorporated

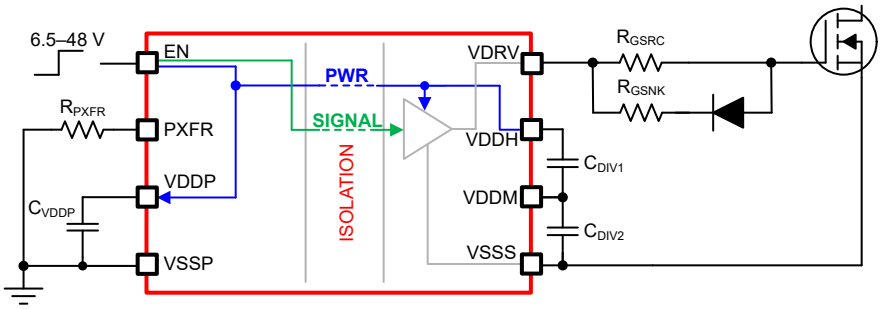

Figure 8-2. TPSI3050M Two-Wire Mode Driving MOSFETs

8.2.1 Design Requirements

Table 8-1 lists the design requirements of the TPSI3050M gate driver.

Table 8-1. TPSI3050M Design Requirements

DESIGN PARAMETERS	
Total gate capacitance	100nC
FET turn-on time	1µs
Propagation delay	< 4µs
Switching frequency	10kHz
Supply voltage (VDDP)	5V ± 5%

8.2.2 Detailed Design Procedure

8.2.2.1 Two-Wire or Three-Wire Mode Selection

The first design decision is to determine if two-wire or three-wire mode can be used in the application. For this design, note that the overall propagation delay is less than 4µs and only three-wire mode is able to meet this requirement. In this case, two-wire mode is not applicable. Two-wire mode, due to its limited power transfer, is typically limited to very low frequency applications of less than a few kHz or when enable times are not critical.

8.2.2.2 C_{DIV1}, C_{DIV2} Capacitance

The C_{DIV1} and C_{DIV2} capacitances required depends on the amount of drop that can be tolerated on the VDDH rail during switching of the external load. The charge stored on the CDIV1 and CDIV2 capacitances is used to provide the current to the load during switching. During switching, charge sharing occurs and the voltage on VDDH drops. At a minimum, TI recommends that the total capacitance formed by the series combination of C_{DIV1} and C_{DIV2} be sized to be at least 20 times the total gate capacitance to be switched. This sizing results in an approximate 0.5V drop of the VDDH supply rail that is used to supply power to the VDRV signal. Equation 1 and Equation 2 can be to used to calculate the amount of capacitance required for a specified voltage drop.

C_{DIV1} and C_{DIV2} must be of the same type and tolerance.

$$C_{DIV1} = \left(\frac{n+1}{n}\right) \times \frac{Q_{LOAD}}{\Delta V},\ n \geq 1.0 \quad (1)$$

$$C_{DIV2} = n \times C_{DIV1}, n \geq 1.0 \quad (2)$$

where

- n is a real number greater than or equal to 1.0.
- C_{DIV1} is the external capacitance from VDDH to VDDM.
- C_{DIV2} is the external capacitance from VDDM to VSSS.
- Q_{LOAD} is the total charge of the load from VDRV to VSSS.
- ΔV is the voltage drop on VDDH when switching the load.

Note

C_{DIV1} and C_{DIV2} represent absolute capacitances and components selected must be adjusted for tolerances and any derating necessary to achieve the required capacitances.

Larger values of ΔV can be used in the application, but excessive droop can cause the VDDH undervoltage lockout falling threshold ($V_{VDDH_UVLO_F}$) to be reached and cause VDRV to be asserted low. Note that as the series combination of C_{DIV1} and C_{DIV2} capacitances increases relative to Q_{LOAD}, the VDDH supply voltage drop decreases, but the initial charging of the VDDH supply voltage during power up increases.

For this design, assuming n = 1 and ΔV ≅ 0.5V, then

$$C_{DIV1} = \left(\frac{1+1}{1}\right) \times \frac{100nC}{0.5V} = 400nF \quad (3)$$

$$C_{DIV2} = 1 \times 400\text{nF} = 400nF \quad (4)$$

For this design, C_{DIV1} = C_{DIV2} = 470nF standard capacitor values were selected.

8.2.2.3 R_{PXFR} Selection

The selection of R_{PXFR} allows for a tradeoff between power consumed and power delivered, as described in the *Three-wire Mode* section. For this design, one must choose an appropriate R_{PXFR} selection that makes sure enough power is transferred to support the amount of load being driven at the specified switching frequency.

During switching of the load, Q_{LOAD} of charge on VDDH is transferred to the load and VDDH supply voltage droops. After each switching cycle, this charge must be replenished before the next switching cycle occurs. This action makes sure that the charge residing on VDDH does not deplete over time due to subsequent switching cycles of the load. The time needed to recover this charge, $t_{RECOVER}$, can be estimated as follows:

$$t_{RECOVER} = \frac{1}{f_{MAX}} \cong \frac{Q_{LOAD}}{I_{OUT}} \quad (5)$$

where

- Q_{LOAD} is the load charge in Coulombs.
- I_{OUT} is the average current available from VDDH supply in Amperes (A).
- f_{MAX} is maximum switching frequency in Hertz (Hz).

For this design, Q_{LOAD} = 100nC and f_{MAX} = 10kHz are known, so I_{OUT} required can be estimated as:

$$I_{OUT} \cong 100nC \times 10kHz = 1.0mA \quad (6)$$

I_{OUT} represents the minimum average current required to meet the design requirements. Using the TPSI3050M calculator tool, one can easily find the R_{PXFR} necessary by referring to the I_{OUT} or f_{MAX} columns directly. Table 8-2 shows the results from the tool, assuming VDDP = 4.75V, to account for the supply tolerance specified in the design requirements. The TPSI3050M Calculator tool can be found at *Design Calculator*.

Note

The results shown were captured at the time of publication and can differ from the latest version of the calculator tool. Refer to the latest version of the design calculator.

Table 8-2. Results From the TPSI3050M Calculator Tool, T_A = 25°C, Three-Wire Mode

R_{PXFR}, kΩ	Power Converter Duty Cycle, %	I_{VDDP}, mA	P_{IN}, mW	P_{OUT}, mW	I_{OUT}, mA	t_{START}, µs	$t_{RECOVER}$, µs	f_{EN_MAX}, kHz	I_{AUX_MAX}, mA
7.32	13.3	5.7	27.2	7.6	0.46	N/A	N/A	N/A	N/A
9.09	21.1	9.1	43.1	12.7	0.80	N/A	N/A	N/A	N/A
11	40.0	17.2	81.8	30.8	2.00	1828	49.0	20.4	3.08
12.7	53.3	22.9	109.0	41.5	2.71	1397	36.4	27.5	5.18

Copyright © 2025 Texas Instruments Incorporated

Table 8-2. Results From the TPSI3050M Calculator Tool, T_A = 25°C, Three-Wire Mode (continued)

R_{PXFR}, kΩ	Power Converter Duty Cycle, %	I_{VDDP}, mA	P_{IN}, mW	P_{OUT}, mW	I_{OUT}, mA	t_{START}, µs	$t_{RECOVER}$, µs	f_{EN_MAX}, kHz	I_{AUX_MAX}, mA
14.7	66.7	28.7	136.4	52.3	3.42	1141	28.9	34.6	7.29
16.5	80.0	34.4	163.6	66.1	4.34	935	22.8	43.8	10.00
20	93.3	40.2	190.8	77.4	5.08	822	19.5	51.2	10.00

Table 8-3 summarizes the various output parameters of the calculator tool.

Table 8-3. TPSI3050M Calculator Tool Parameter Descriptions

Parameter	Description
R_{PXFR}	External resistor setting that controls the amount of power transferred to the load by adjusting the duty cycle. Higher R_{PXFR} settings lead to increased power transfer and power consumption.
Power Converter Duty Cycle	Nominal duty cycle of the power converter. Higher R_{PXFR} settings leads to higher duty cycles of the power converter and higher power transfer.
I_{VDDP}	Average current consumed from the VDDP supply
P_{IN}	Average power consumed from the VDDP supply
P_{OUT}	Average power delivered to the VDDH supply
I_{OUT}	Average current delivered to the VDDH supply
t_{START}	Start-up time from VDDP rising until VDDH supply rail is fully charged. This parameter assumes VDDH and VDDM supply rails are fully discharged initially.
$t_{RECOVER}$	Represents the time for the VDDH rail to recover after switching the load present on VDRV
f_{MAX}	Maximum switching frequency possible for a given R_{PXFR} setting for the applied loading conditions
I_{AUX_MAX}	Maximum auxiliary current available at current user input settings. There is an inverse relationship between f_{MAX} and I_{AUX_MAX}.

For this design example, R_{PXFR} must be configured to the 11kΩ setting or higher to transfer enough power to support switching the specified load at the required 10kHz frequency.

8.2.2.4 C_{VDDP} Capacitance

For two-wire mode, the recommended capacitance C_{VDDP} from VDDP to VSSP is 220nF.

For this design, three-wire mode is required to meet the design requirements. For three-wire mode, increasing the amount of capacitance, C_{VDDP}, improves the ripple on the VDDP supply. For this design, 1µF in parallel with 100nF is used.

8.2.2.5 Gate Driver Output Resistor

The optional external gate driver resistors, R_{GSRC} and R_{GSNK}, along with the diode are used to:

1. Limit ringing caused by parasitic inductances and capacitances
2. Limit ringing caused by high voltage switching dv/dt, high current switching di/dt, and body-diode reverse recovery
3. Fine-tune gate drive strength for sourcing and sinking
4. Reduce electromagnetic interference (EMI)

The TPSI3050M has a pullup structure with a P-channel MOSFET with a peak source current of 1.5A. Therefore, the peak source current can be predicted with:

$$I_{O+} \cong min\left(1.5A, \frac{V_{VDDH}}{R_{DSON_VDRV} + R_{GSRC} + R_{GFET_INT}}\right) \quad (7)$$

where

- R_{GSRC}: external turn-on resistance.
- R_{DSON_VDRV}: TPSI3050M driver on resistance in high state. See *Electrical Characteristics*.

- V_{VDDH}: VDDH voltage. Assumed 10.2V in this example.
- R_{GFET_INT}: external power transistor internal gate resistance, found in the power transistor data sheet. Assume 0Ω for this example.
- I_{O+}: peak source current. The minimum value between 1.5A, the gate driver peak source current, and the calculated value based on the gate drive loop resistance.

For this example, R_{DSON_VDRV} = 2.5Ω, R_{GSRC} = 8Ω, and R_{GFET_INT} = 0Ω results in:

$$I_{O+} \cong min\left(1.5A, \frac{10.2V}{2.5\Omega + 8\Omega + 0\Omega}\right) = 0.97A \tag{8}$$

Similarly, the TPSI3050M has a pulldown structure with an N-channel MOSFET with a peak sink current of 3.0A. Therefore, assuming R_{GFET_INT} = 0Ω, the peak sink current can be predicted with:

$$I_{O-} \cong min\left[3.0A, (V_{VDDH} \times (R_{GSRC} + R_{GSNK}) - R_{GSRC} \times V_F) \times \frac{1}{R_{GSRC} \times R_{GSNK} + R_{DSON_VDRV} \times (R_{GSRC} + R_{GSNK})}\right] \tag{9}$$

where

- R_{GSRC}: external turn-on resistance.
- R_{GSNK}: external turn-off resistance.
- R_{DSON_VDRV}: TPSI3050M driver on resistance in low state. See *Electrical Characteristics*.
- V_{VDDH}: VDDH voltage. Assumed 10.2V in this example.
- V_F: diode forward voltage drop. Assumed 0.7V in this example.
- I_{O-}: peak sink current. The minimum value between 3.0A, the gate driver peak sink current, and the calculated value based on the gate drive loop resistance.

For this example, assuming R_{DSON_VDRV} = 1.7Ω, R_{GSRC} = 8Ω, R_{GSNK} = 4.5Ω, and R_{GFET_INT} = 0Ω, results in:

$$I_{O-} \cong min\left[3.0A, (10.2V \times (8\Omega + 4.5\Omega) - 3.5\Omega \times 0.7V) \times \frac{1}{8\Omega \times 4.5\Omega + 1.7\Omega \times (8\Omega + 4.5\Omega)}\right] = 2.18A \tag{10}$$

Importantly, the estimated peak current is also influenced by PCB layout and load capacitance. Parasitic inductance in the gate driver loop can slow down the peak gate drive current and introduce overshoot and undershoot. Therefore, TI strongly recommends to minimize the gate driver loop.

8.2.2.6 Start-up Time and Recovery Time

As described in the *C_{DIV1}, C_{DIV2} Capacitance* section, the start-up time of the fully discharged VDDH rail depends on the amount of capacitance present on the VDDH supply. The rate at which this capacitance is charged depends on the amount of power transferred from the primary side to the secondary side. The amount of power transferred can be adjusted by choosing R_{PXFR}. Increasing the resistor settings for R_{PXFR} transfers more power from the primary supply (VDDP) to the secondary supply (VDDH), thereby reducing the overall start-up and recovery times.

8.2.2.7 Supplying Auxiliary Current, I_{AUX} From VDDM

The TPSI3050M is capable of providing power from VDDM to support external auxiliary circuitry as shown in Figure 8-3. In this case, the required transfer power must include the additional power consumed by the auxiliary circuitry on the VDDM rail. The R_{PXFR} value must be set to meet the overall power requirements.

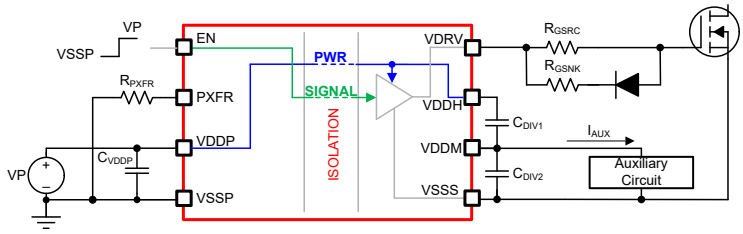

Figure 8-3. Supplying Auxiliary Power From VDDM

Copyright © 2025 Texas Instruments Incorporated

As an example, assume that the auxiliary circuitry requires an average current of 4mA. Table 8-4 summarizes the results from the TPSI3050M calculator tool. The Calculator tool can be found at *Design Calculator*.

Note

The results shown were captured at the time of publication and can differ from the latest version of the calculator tool. Refer to the latest version of the design calculator.

Table 8-4. Results From the TPSI3050M Calculator Tool, T_A = 25°C, Three-Wire Mode With I_{AUX} = 4mA

R_{PXFR}, kΩ	Power Converter Duty Cycle, %	I_{VDDP}, mA	P_{IN}, mW	P_{OUT}, mW	I_{OUT}, mA	t_{START}, µs	$t_{RECOVER}$, µs	f_{EN_MAX}, kHz	I_{AUX_MAX}, mA
7.32	13.3	5.7	27.2	7.6	0.46	N/A	N/A	N/A	N/A
9.09	21.1	9.1	43.1	12.7	0.80	N/A	N/A	N/A	N/A
11	40.0	17.2	81.8	30.8	2.00	N/A	N/A	N/A	N/A
12.7	53.3	22.9	109.0	41.5	2.71	2691	36.4	27.5	5.18
14.7	66.7	28.7	136.4	52.3	3.42	1834	28.9	34.6	7.29
16.5	80.0	34.4	163.6	66.1	4.34	1327	22.8	43.8	10.00
20	93.3	40.2	190.8	77.4	5.08	1096	19.5	51.2	10.00

Based on the results in Table 8-4, several observations can be made:

- With R_{PXFR} = 7.32kΩ , R_{PXFR} = 9.09kΩ, and R_{PXFR} = 11kΩ, insufficient power is available to meet the application power needs specified in the design requirements in Table 8-1.
- With R_{PXFR} = 12.7kΩ and higher, sufficient power is transferred to meet the specified design requirements.
- For a given R_{PXFR}, because a significant amount of the transferred power is being provided to the auxiliary circuitry, t_{START} is longer, and f_{MAX} reduced when compared to the results shown in Table 8-4 with I_{AUX} = 0mA.

8.2.2.8 VDDM Ripple Voltage

Note that when supplying power from VDDM, that is when I_{AUX} > 0mA, additional voltage ripple is present on the VDDM rail. For a given R_{PXFR} setting, this ripple can be reduced by applying additional capacitance from VDDM to VSSS. For this design example, the ripple on VDDM, $VDDM_{ripple}$, computed in the calculator tool is 190mV.

It is possible to reduce the $VDDM_{ripple}$ with the addition of capacitance while still maintaining the original $VDDH_{droop}$ = 0.5V. For example, applying C_{DIV1} = 330nF and C_{DIV2} = 680nF in the calculator tool, reduces $VDDM_{ripple}$ to 131mV, while still maintaining $VDDH_{droop}$ < 0.5V. Of course, this additional capacitance leads to increased t_{START} times.

8.2.3 Application Curves

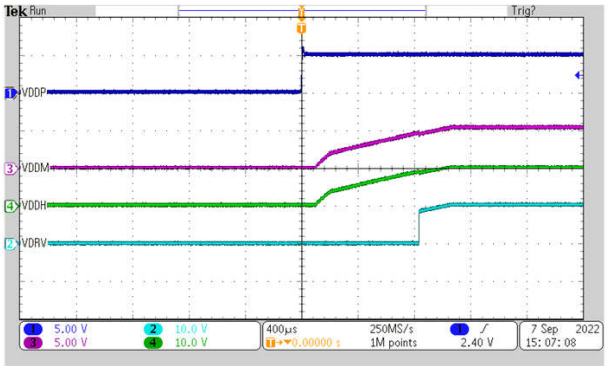

Three-wire mode | VDDP = 5.0V | R_{PXFR} = 9.09kΩ
C_{DIV1} = 470nF | C_{DIV2} = 470nF
I_{AUX} = 0mA | C_{VDRV} = 10nF | T_A = 25°C

Figure 8-4. Power Up, V_{EN} = V_{VDDP}, Three-Wire Mode, TPSI3050M

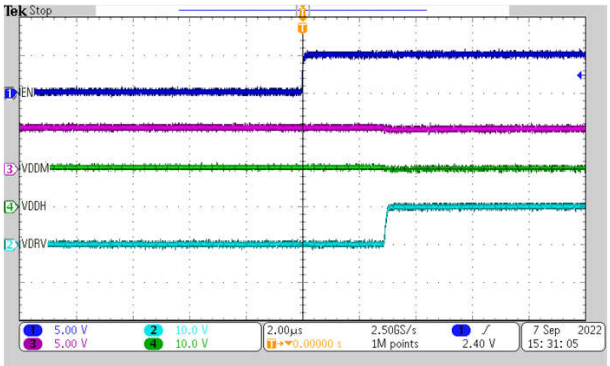

Three-wire mode | VDDP = 5.0V | R_{PXFR} = 9.09kΩ
C_{DIV1} = 470nF | C_{DIV2} = 470nF
I_{AUX} = 0mA | C_{VDRV} = 10nF | T_A = 25°C

Figure 8-5. t_{LH_VDRV}, Three-Wire Mode, TPSI3050M

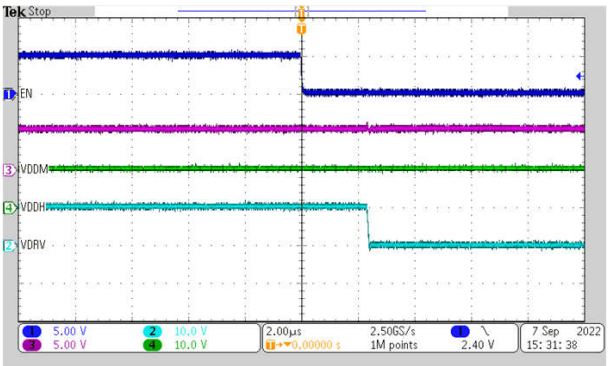

Three-wire mode | VDDP = 5.0V | R_{PXFR} = 9.09kΩ
C_{DIV1} = 470nF | C_{DIV2} = 470nF
I_{AUX} = 0mA | C_{VDRV} = 10nF | T_A = 25°C

Figure 8-6. t_{HL_VDRV}, Three-Wire Mode, TPSI3050M

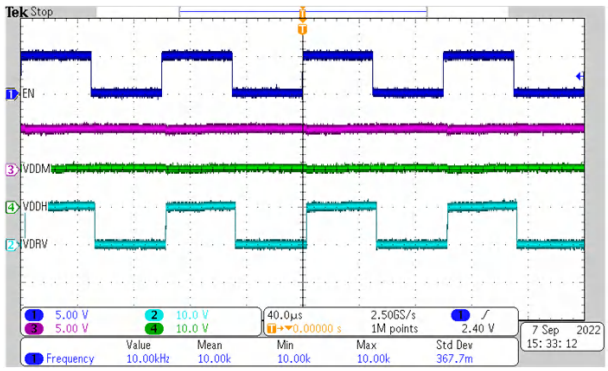

Three-wire mode | VDDP = 5.0V | R_{PXFR} = 9.09kΩ
C_{DIV1} = 470nF | C_{DIV2} = 470nF
I_{AUX} = 0mA | C_{VDRV} = 10nF | T_A = 25°C

Figure 8-7. Three-Wire Mode, f_{EN} = 10kHz, TPSI3050M

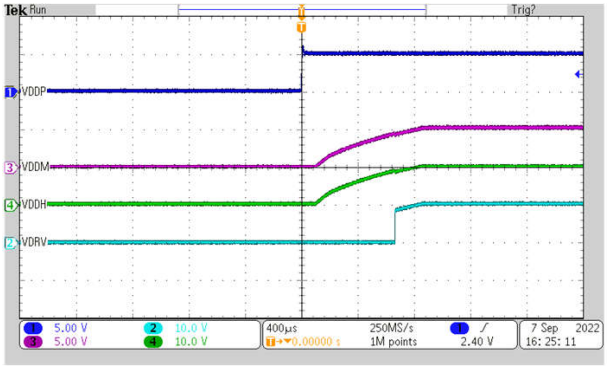

Three-wire mode | VDDP = 5.0V | R_{PXFR} = 12.7kΩ
C_{DIV1} = 330nF | C_{DIV2} = 680nF
I_{AUX} = 4mA | C_{VDRV} = 10nF | T_A = 25°C

Figure 8-8. Power Up, V_{EN} = V_{VDDP}, Three-Wire Mode, TPSI3050M

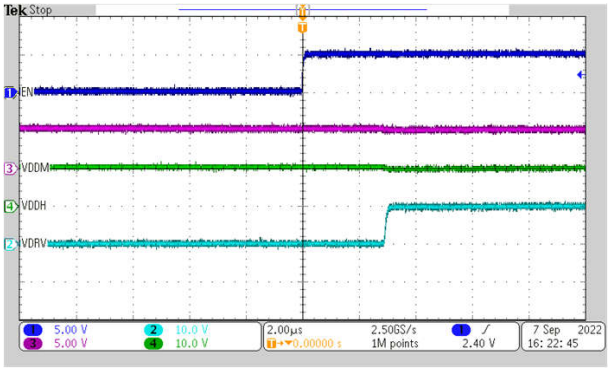

Three-wire mode | VDDP = 5.0V | R_{PXFR} = 12.7kΩ
C_{DIV1} = 330nF | C_{DIV2} = 680nF
I_{AUX} = 4mA | C_{VDRV} = 10nF | T_A = 25°C

Figure 8-9. t_{LH_VDRV}, Three-Wire Mode, TPSI3050M

Copyright © 2025 Texas Instruments Incorporated

8.2.3 Application Curves (continued)

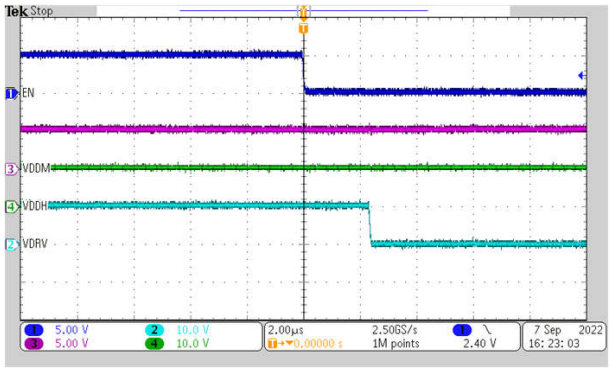

Three-wire mode | VDDP = 5.0V | R_{PXFR} = 12.7kΩ
C_{DIV1} = 330nF | C_{DIV2} = 680nF
I_{AUX} = 4mA | C_{VDRV} = 10nF | T_A = 25°C

Figure 8-10. t_{HL_VDRV}, Three-Wire Mode, TPSI3050M

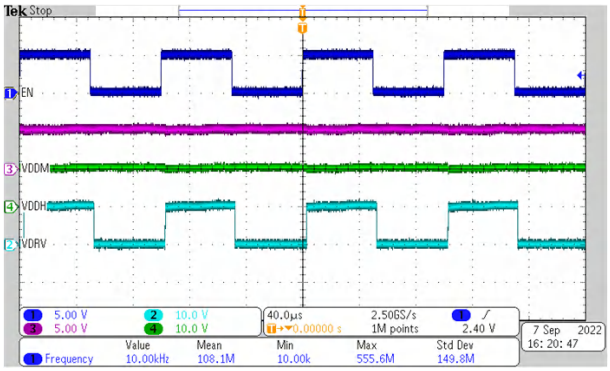

Three-wire mode | VDDP = 5.0V | R_{PXFR} = 12.7kΩ
C_{DIV1} = 330nF | C_{DIV2} = 680nF
I_{AUX} = 4mA | C_{VDRV} = 10nF | T_A = 25°C

Figure 8-11. Three-Wire Mode, f_{EN} = 10kHz, TPSI3050M

8.2.4 Insulation Lifetime

Insulation lifetime projection data is collected by using industry-standard Time Dependent Dielectric Breakdown (TDDB) test method. In this test, all pins on each side of the barrier are tied together creating a two-terminal device and high voltage applied between the two sides. The insulation breakdown data is collected at various high voltages switching at 60Hz over temperature. For reinforced insulation, VDE standard requires the use of TDDB projection line with failure rate of less than 1 part per million (ppm). Even though the expected minimum insulation lifetime is 20 years at the specified working isolation voltage, VDE reinforced certification requires additional safety margin of 20% for working voltage and 50% for lifetime which translates into minimum required insulation lifetime of 30 years at a working voltage that's 20% higher than the specified value.

Figure 8-12 shows the intrinsic capability of the isolation barrier to withstand high voltage stress over its lifetime. Based on the TDDB data, the intrinsic capability of the insulation is $1000V_{RMS}$ with a lifetime of 1480 years.

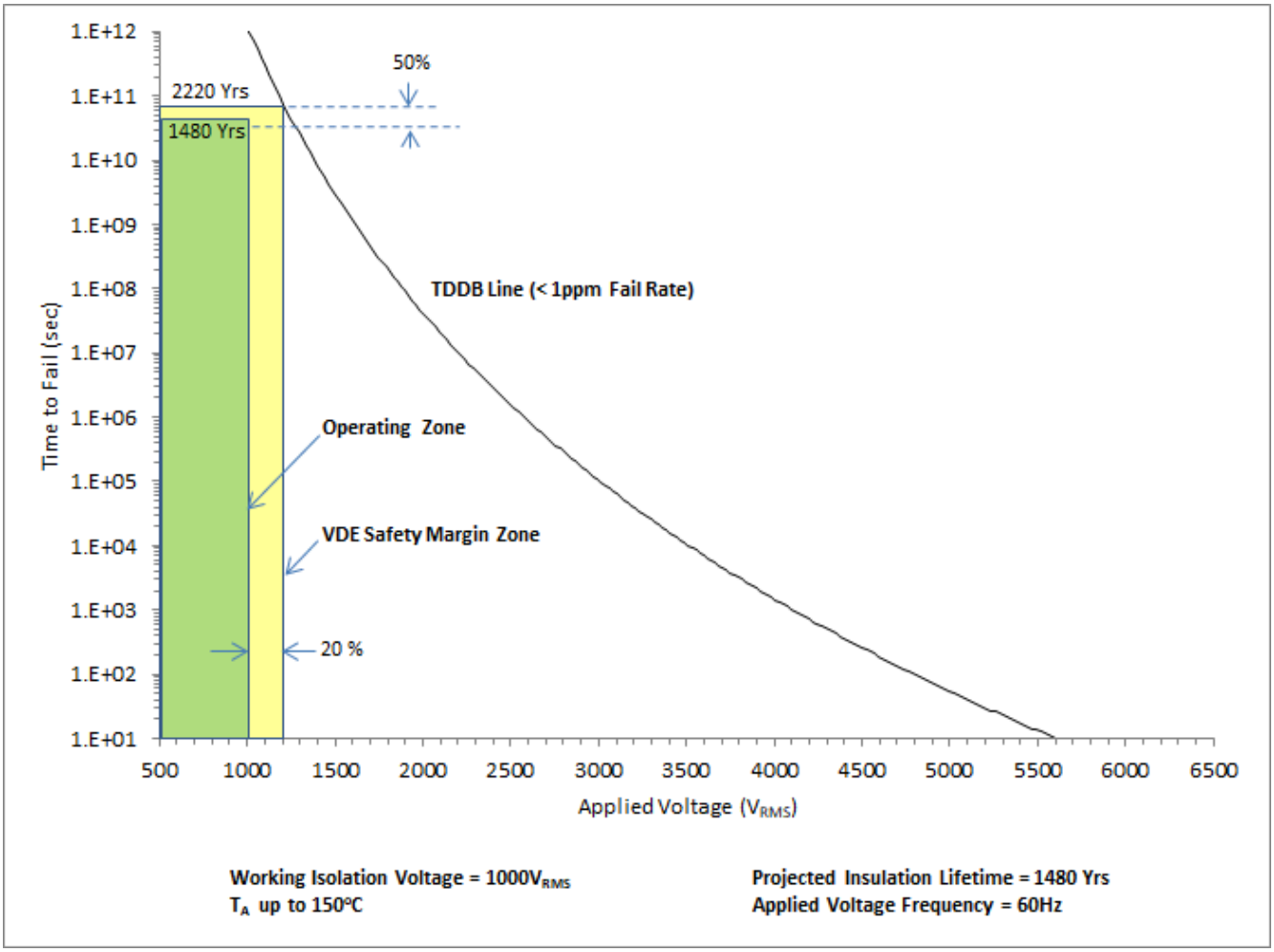

Figure 8-12. Insulation Lifetime Projection Data

8.3 Power Supply Recommendations

In three-wire mode, to help ensure a reliable supply voltage, TI recommends that the C_{VDDP} capacitance from VDDP to VSSP consists of a 0.1µF bypass capacitor for high frequency decoupling in parallel with a 10µF for low frequency decoupling.

In two-wire mode, TI recommends that the C_{VDDP} capacitance placed from VDDP to VSSP consists of a 220nF capacitor connected close to the device between the VDDP and VSSP pins. The recommended absolute capacitance must be 220nF, so if derating is required, a higher component value can be needed.

Low-ESR and low-ESL capacitors must be connected close to the device between the VDDP and VSSP pins.

8.4 Layout

8.4.1 Layout Guidelines

Designers must pay close attention to PCB layout to achieve optimum performance for the TPSI3050M. Some key guidelines are:

- Component placement:
  - Place the driver as close as possible to the power semiconductor to reduce the parasitic inductance of the gate loop on the PCB traces.
  - Connect low-ESR and low-ESL capacitors close to the device between the VDDH and VDDM pins and the VDDM and VSSS pins to bypass noise and to support high peak currents when turning on the external power transistor.

Copyright © 2025 Texas Instruments Incorporated

  - Connect low-ESR and low-ESL capacitors close to the device between the VDDP and VSSP pins.
  - Minimize parasitic capacitances on the R_{PXFR} pin.
- Grounding considerations:
  - Limit the high peak currents that charge and discharge the transistor gates to a minimal physical area. This limitation decreases the loop inductance and minimizes noise on the gate terminals of the transistors. Place the gate driver as close as possible to the transistors.
  - Connect the driver VSSS to the Kelvin connection of MOSFET source or IGBT emitter. If the power device does not have a split Kelvin source or emitter, connect the VSSS pin as close as possible to the source or emitter terminal of the power device package to separate the gate loop from the high power switching loop.
- High-voltage considerations:
  - To ensure isolation performance between the primary and secondary side, avoid placing any PCB traces or copper below the driver device. TI recommends a PCB cutout or groove to prevent contamination that can compromise the isolation performance.
- Thermal considerations:
  - Proper PCB layout can help dissipate heat from the device to the PCB and minimize junction-to-board thermal impedance (θ_{JB}).
  - If the system has multiple layers, TI also recommends connecting the VDDH and VSSS pins to internal ground or power planes through multiple vias of adequate size. These vias must be located close to the IC pins to maximize thermal conductivity. However, keep in mind that no traces or coppers from different high voltage planes are overlapping.

8.4.2 Layout Example

Figure 8-13 shows a PCB layout example with the signals and key components labeled.

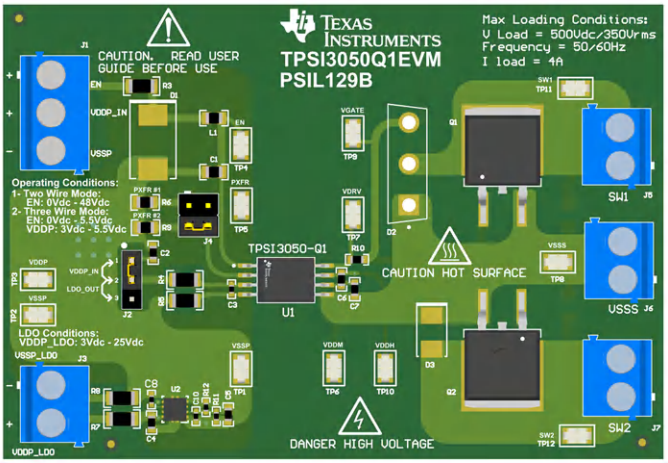

Figure 8-13. 3-D PCB View

Figure 8-14 and Figure 8-15 show the top and bottom layer traces and copper.

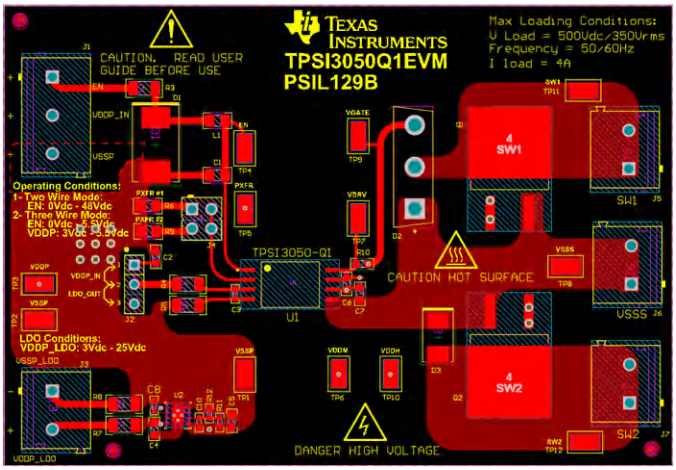

Figure 8-14. Top Layer

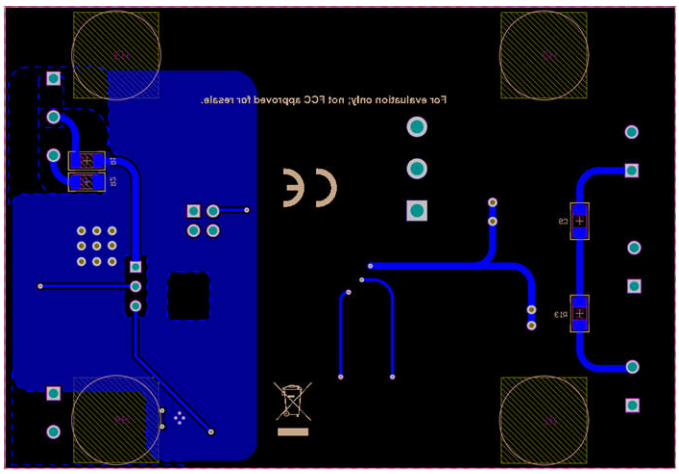

Figure 8-15. Bottom Layer

Copyright © 2025 Texas Instruments Incorporated

9 Device and Documentation Support

9.1 Receiving Notification of Documentation Updates

To receive notification of documentation updates, navigate to the device product folder on ti.com. Click on *Notifications* to register and receive a weekly digest of any product information that has changed. For change details, review the revision history included in any revised document.

9.2 Support Resources

TI E2E™ support forums are an engineer's go-to source for fast, verified answers and design help — straight from the experts. Search existing answers or ask your own question to get the quick design help you need.

Linked content is provided "AS IS" by the respective contributors. They do not constitute TI specifications and do not necessarily reflect TI's views; see TI's Terms of Use.

9.3 Trademarks

TI E2E™ is a trademark of Texas Instruments.
All trademarks are the property of their respective owners.

9.4 Electrostatic Discharge Caution

This integrated circuit can be damaged by ESD. Texas Instruments recommends that all integrated circuits be handled with appropriate precautions. Failure to observe proper handling and installation procedures can cause damage.

ESD damage can range from subtle performance degradation to complete device failure. Precision integrated circuits may be more susceptible to damage because very small parametric changes could cause the device not to meet its published specifications.

9.5 Glossary

TI Glossary This glossary lists and explains terms, acronyms, and definitions.

10 Revision History

NOTE: Page numbers for previous revisions may differ from page numbers in the current version.

DATE	REVISION	NOTES
March 2025	*	Initial Release

11 Mechanical, Packaging, and Orderable Information

The following pages include mechanical, packaging, and orderable information. This information is the most current data available for the designated devices. This data is subject to change without notice and revision of this document. For browser-based versions of this data sheet, refer to the left-hand navigation.

PACKAGING INFORMATION

Orderable part number	Status (1)	Material type (2)	Package | Pins	Package qty | Carrier	RoHS (3)	Lead finish/ Ball material (4)	MSL rating/ Peak reflow (5)	Op temp (°C)	Part marking (6)
TPSI3050MDWZR	Active	Production	SO-MOD (DWZ) | 8	1000 | LARGE T&R	Yes	NIPDAU	Level-3-260C-168 HR	-55 to 125	I3050M
TPSI3050MDWZR.A	Active	Production	SO-MOD (DWZ) | 8	1000 | LARGE T&R	Yes	NIPDAU	Level-3-260C-168 HR	-55 to 125	I3050M
TPSI3050MDWZR.B	Active	Production	SO-MOD (DWZ) | 8	1000 | LARGE T&R	Yes	NIPDAU	Level-3-260C-168 HR	-55 to 125	I3050M

(1) **Status:** For more details on status, see our product life cycle.

(2) **Material type:** When designated, preproduction parts are prototypes/experimental devices, and are not yet approved or released for full production. Testing and final process, including without limitation quality assurance, reliability performance testing, and/or process qualification, may not yet be complete, and this item is subject to further changes or possible discontinuation. If available for ordering, purchases will be subject to an additional waiver at checkout, and are intended for early internal evaluation purposes only. These items are sold without warranties of any kind.

(3) **RoHS values:** Yes, No, RoHS Exempt. See the TI RoHS Statement for additional information and value definition.

(4) **Lead finish/Ball material:** Parts may have multiple material finish options. Finish options are separated by a vertical ruled line. Lead finish/Ball material values may wrap to two lines if the finish value exceeds the maximum column width.

(5) **MSL rating/Peak reflow:** The moisture sensitivity level ratings and peak solder (reflow) temperatures. In the event that a part has multiple moisture sensitivity ratings, only the lowest level per JEDEC standards is shown. Refer to the shipping label for the actual reflow temperature that will be used to mount the part to the printed circuit board.

(6) **Part marking:** There may be an additional marking, which relates to the logo, the lot trace code information, or the environmental category of the part.

Multiple part markings will be inside parentheses. Only one part marking contained in parentheses and separated by a "~" will appear on a part. If a line is indented then it is a continuation of the previous line and the two combined represent the entire part marking for that device.

Important Information and Disclaimer: The information provided on this page represents TI's knowledge and belief as of the date that it is provided. TI bases its knowledge and belief on information provided by third parties, and makes no representation or warranty as to the accuracy of such information. Efforts are underway to better integrate information from third parties. TI has taken and continues to take reasonable steps to provide representative and accurate information but may not have conducted destructive testing or chemical analysis on incoming materials and chemicals. TI and TI suppliers consider certain information to be proprietary, and thus CAS numbers and other limited information may not be available for release.

In no event shall TI's liability arising out of such information exceed the total purchase price of the TI part(s) at issue in this document sold by TI to Customer on an annual basis.

TAPE AND REEL INFORMATION

REEL DIMENSIONS

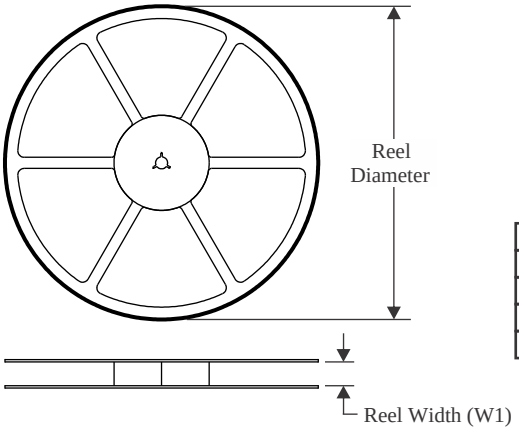

TAPE DIMENSIONS

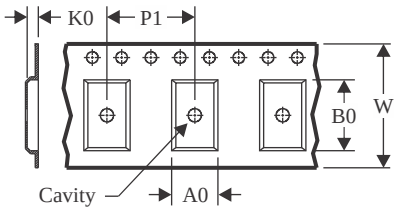

A0	Dimension designed to accommodate the component width
B0	Dimension designed to accommodate the component length
K0	Dimension designed to accommodate the component thickness
W	Overall width of the carrier tape
P1	Pitch between successive cavity centers

QUADRANT ASSIGNMENTS FOR PIN 1 ORIENTATION IN TAPE

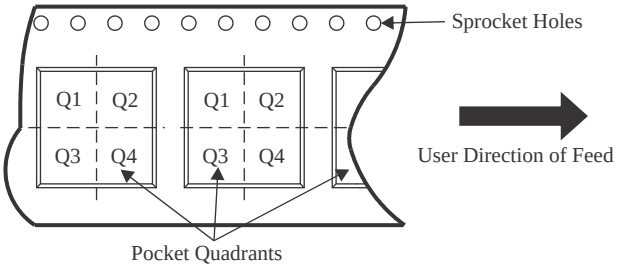

*All dimensions are nominal

Device	Package Type	Package Drawing	Pins	SPQ	Reel Diameter (mm)	Reel Width W1 (mm)	A0 (mm)	B0 (mm)	K0 (mm)	P1 (mm)	W (mm)	Pin1 Quadrant
TPSI3050MDWZR	SO-MOD	DWZ	8	1000	330.0	16.4	12.05	6.15	3.3	16.0	16.0	Q1

TAPE AND REEL BOX DIMENSIONS

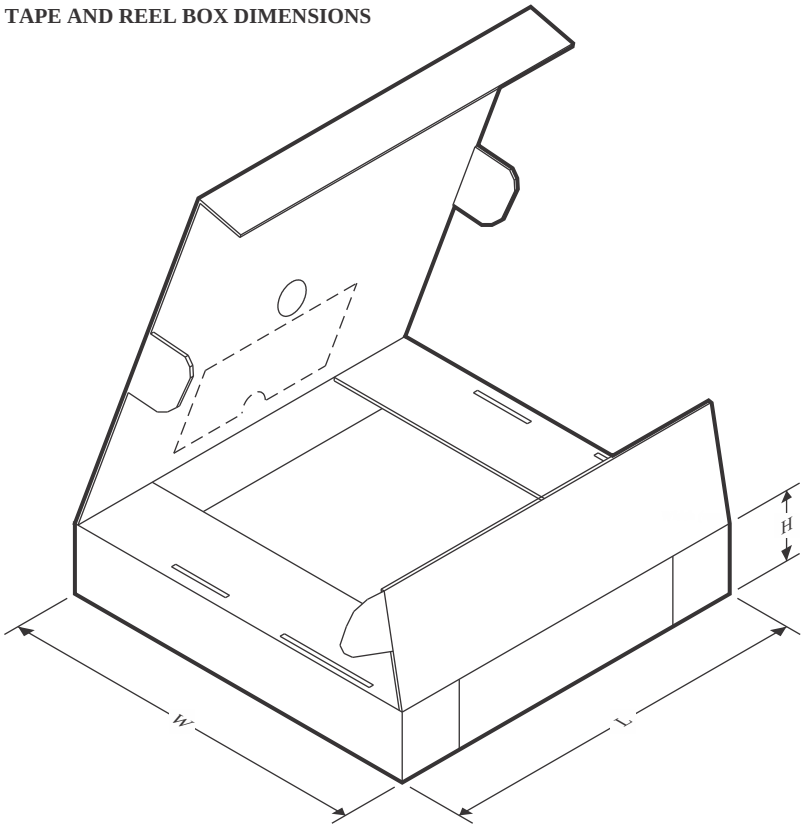

*All dimensions are nominal

Device	Package Type	Package Drawing	Pins	SPQ	Length (mm)	Width (mm)	Height (mm)
TPSI3050MDWZR	SO-MOD	DWZ	8	1000	350.0	350.0	43.0

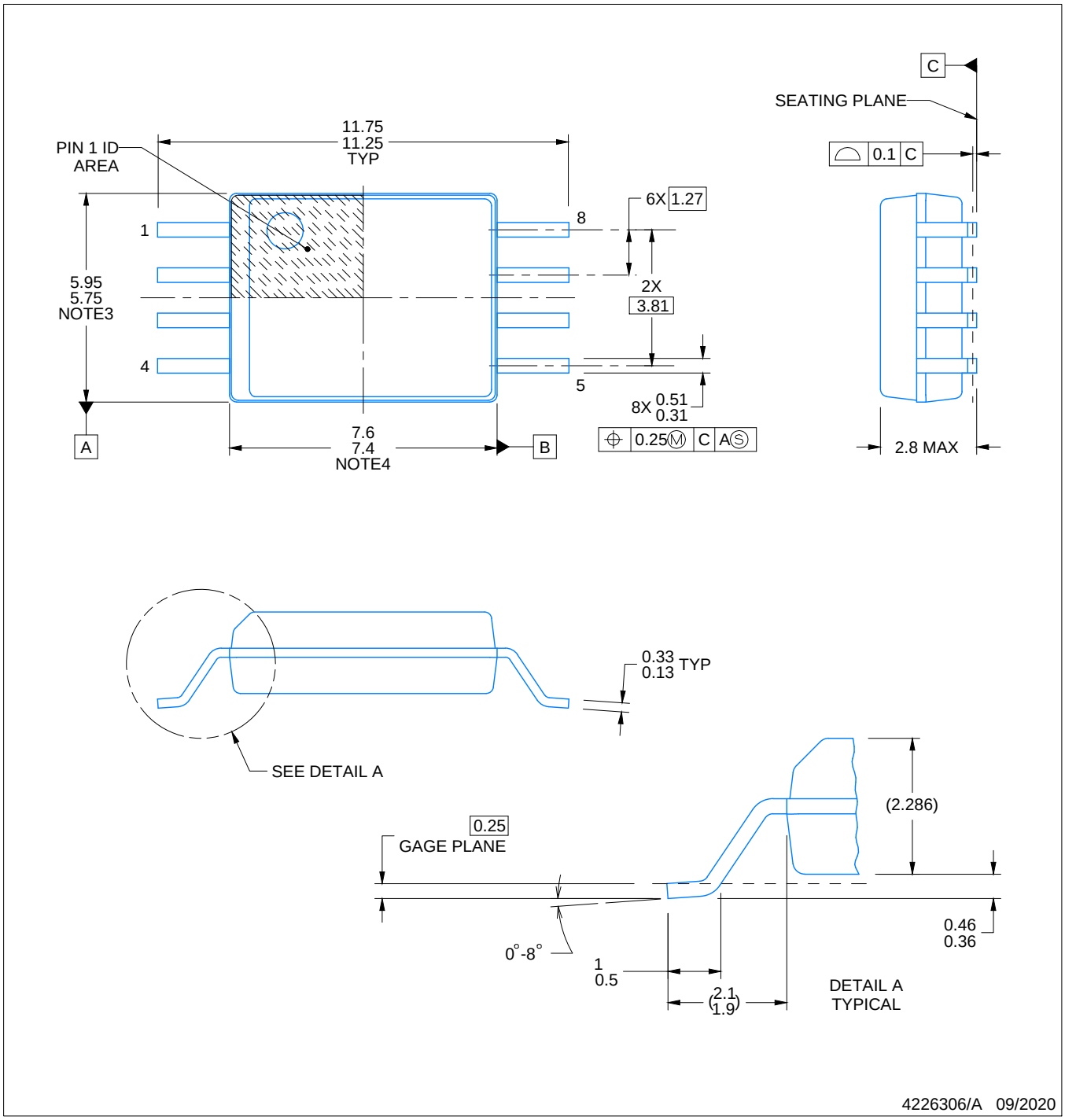

NOTES:

1. All linear dimensions are in millimeters. Any dimensions in parenthesis are for reference only. Dimensioning and tolerancing per ASME Y14.5M.
2. This drawing is subject to change without notice.
3. This dimension does not include mold flash, protrusions, or gate burrs. Mold flash, protrusions, or gate burrs shall not exceed 0.15 mm per side.
4. This dimension does not include interlead flash. Interlead flash shall not exceed 0.25 mm per side.
5. Ref. JEDEC registration MS-013

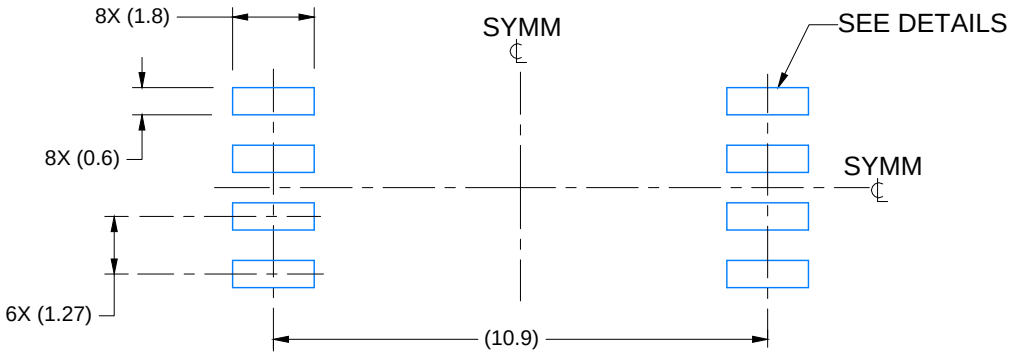

LAND PATTERN EXAMPLE
9.1 mm NOMINAL CLEARANCE/CREEPAGE
SCALE: 6X

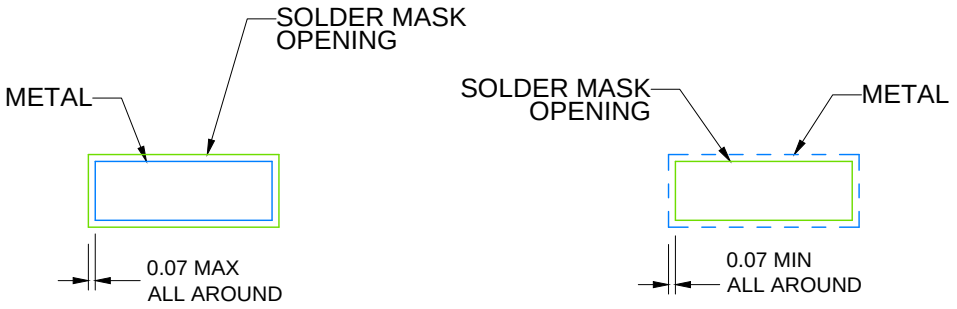

NON SOLDER MASK
DEFINED

SOLDER MASK
DEFINED

SOLDER MASK DETAILS

4226306/A 09/2020

NOTES: (continued)

5. Publication IPC-7351 may have alternate designs.
6. Solder mask tolerances between and around signal pads can vary based on board fabrication site.

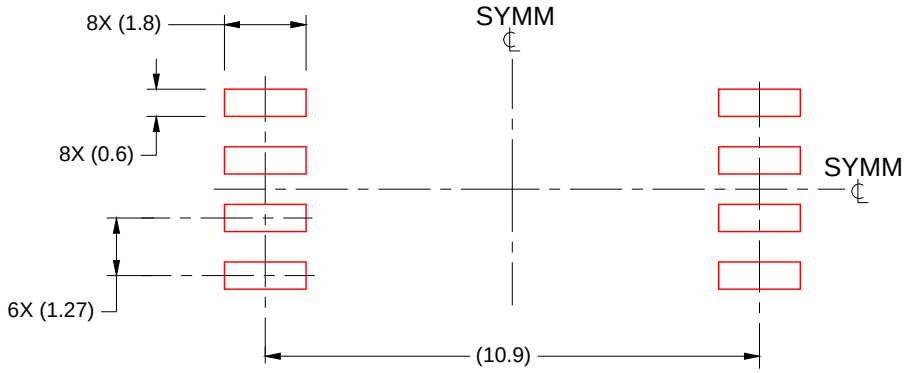

SOLDER PASTE EXAMPLE
BASED ON 0.125 mm THICK STENCIL
SCALE: 6X

4226306/A 09/2020

NOTES: (continued)

7. Laser cutting apertures with trapezoidal walls and rounded corners may offer better paste release. IPC-7525 may have alternate design recommendations.
8. Board assembly site may have different recommendations for stencil design.

IMPORTANT NOTICE AND DISCLAIMER

TI PROVIDES TECHNICAL AND RELIABILITY DATA (INCLUDING DATA SHEETS), DESIGN RESOURCES (INCLUDING REFERENCE DESIGNS), APPLICATION OR OTHER DESIGN ADVICE, WEB TOOLS, SAFETY INFORMATION, AND OTHER RESOURCES “AS IS” AND WITH ALL FAULTS, AND DISCLAIMS ALL WARRANTIES, EXPRESS AND IMPLIED, INCLUDING WITHOUT LIMITATION ANY IMPLIED WARRANTIES OF MERCHANTABILITY, FITNESS FOR A PARTICULAR PURPOSE OR NON-INFRINGEMENT OF THIRD PARTY INTELLECTUAL PROPERTY RIGHTS.

These resources are intended for skilled developers designing with TI products. You are solely responsible for (1) selecting the appropriate TI products for your application, (2) designing, validating and testing your application, and (3) ensuring your application meets applicable standards, and any other safety, security, regulatory or other requirements.

These resources are subject to change without notice. TI grants you permission to use these resources only for development of an application that uses the TI products described in the resource. Other reproduction and display of these resources is prohibited. No license is granted to any other TI intellectual property right or to any third party intellectual property right. TI disclaims responsibility for, and you will fully indemnify TI and its representatives against, any claims, damages, costs, losses, and liabilities arising out of your use of these resources.

TI’s products are provided subject to TI’s Terms of Sale or other applicable terms available either on ti.com or provided in conjunction with such TI products. TI’s provision of these resources does not expand or otherwise alter TI’s applicable warranties or warranty disclaimers for TI products.

TI objects to and rejects any additional or different terms you may have proposed.

Mailing Address: Texas Instruments, Post Office Box 655303, Dallas, Texas 75265
Copyright © 2025, Texas Instruments Incorporated