LM2742 N-Channel FET Synchronous Buck Regulator Controller for Low Output Voltages

Check for Samples: LM2742

FEATURES

- **Input Power from 1V to 16V**
- **Output Voltage Adjustable down to 0.6V**
- **Power Good Flag, Adjustable Soft-start and Output Enable for Easy Power Sequencing**
- **Reference Accuracy: 1.5% (0°C–125°C)**
- **Current Limit Without Sense Resistor**
- **Soft Start**
- **Switching Frequency from 50 kHz to 2 MHz**
- **40ns Typical Minimum On-time**
- **TSSOP-14 Package**

APPLICATIONS

- **POL Power Supply Modules**
- **Cable Modems**
- **Set-Top Boxes/ Home Gateways**
- **DDR Core Power**
- **High-Efficiency Distributed Power**
- **Local Regulation of Core Power**

DESCRIPTION

The LM2742 is a high-speed, synchronous, switching regulator controller. It is intended to control currents of 0.7A to 20A with up to 95% conversion efficiencies. Power up and down sequencing is achieved with the power-good flag, adjustable soft-start and output enable features. The LM2742 operates from a low-current 5V bias and can convert from a 1V to 16V power rail. The part utilizes a fixed-frequency, voltage-mode, PWM control architecture and the switching frequency is adjustable from 50kHz to 2MHz by setting the value of an external resistor. Current limit is achieved by monitoring the voltage drop across the on-resistance of the low-side MOSFET, which enables on-times on the order of 40ns, one of the best in the industry. The wide range of operating frequencies gives the power supply designer the flexibility to fine-tune component size, cost, noise and efficiency. The adaptive, non-overlapping MOSFET gate-drivers and high-side bootstrap structure helps to further maximize efficiency. The high-side power FET drain voltage can be from 1V to 16V and the output voltage is adjustable down to 0.6V.

TYPICAL APPLICATION

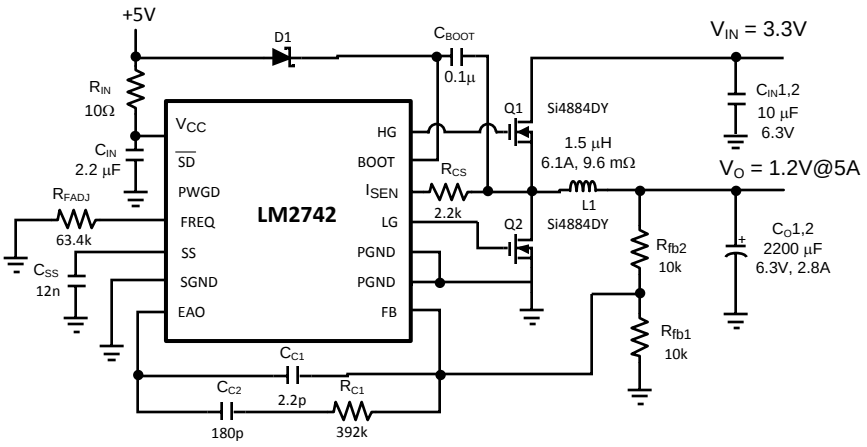

Figure 1. Typical Application Circuit

Please be aware that an important notice concerning availability, standard warranty, and use in critical applications of Texas Instruments semiconductor products and disclaimers thereto appears at the end of this data sheet.

All trademarks are the property of their respective owners.

PRODUCTION DATA information is current as of publication date. Products conform to specifications per the terms of the Texas Instruments standard warranty. Production processing does not necessarily include testing of all parameters.

Copyright © 2004–2013, Texas Instruments Incorporated

These devices have limited built-in ESD protection. The leads should be shorted together or the device placed in conductive foam during storage or handling to prevent electrostatic damage to the MOS gates.

CONNECTION DIAGRAM

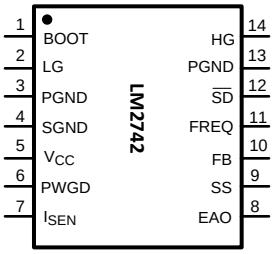

Figure 2. 14-Lead Plastic TSSOP
θ_{JA} = 155°C/W

PIN DESCRIPTIONS

BOOT (Pin 1) - Supply rail for the N-channel MOSFET gate drive. The voltage should be at least one gate threshold above the regulator input voltage to properly turn on the high-side N-FET.

LG (Pin 2) - Gate drive for the low-side N-channel MOSFET. This signal is interlocked with HG to avoid shoot-through problems

PGND (Pins 3, 13) - Ground for FET drive circuitry. It should be connected to system ground.

SGND (Pin 4) - Ground for signal level circuitry. It should be connected to system ground.

V_{CC} (Pin 5) - Supply rail for the controller.

PWGD (Pin 6) - Power Good. This is an open drain output. The pin is pulled low when the chip is in UVP, OVP, or UVLO mode. During normal operation, this pin is connected to V_{CC} or other voltage source through a pull-up resistor.

ISEN (Pin 7) - Current limit threshold setting. This sources a fixed 50µA current. A resistor of appropriate value should be connected between this pin and the drain of the low-side FET.

EAO (Pin 8) - Output of the error amplifier. The voltage level on this pin is compared with an internally generated ramp signal to determine the duty cycle. This pin is necessary for compensating the control loop.

SS (Pin 9) - Soft start pin. A capacitor connected between this pin and ground sets the speed at which the output voltage ramps up. Larger capacitor value results in slower output voltage ramp but also lower inrush current.

FB (Pin 10) - This is the inverting input of the error amplifier, which is used for sensing the output voltage and compensating the control loop.

FREQ (Pin 11) - The switching frequency is set by connecting a resistor between this pin and ground.

$\overline{SD}$ (Pin 12) - IC Logic Shutdown. When this pin is pulled low the chip turns off both the high side and low side switches. While this pin is low, the IC will not start up. An internal 20µA pull-up connects this pin to V_{CC}. For a device which turns on the low side switch during shutdown, see the pin compatible LM2737.

HG (Pin 14) - Gate drive for the high-side N-channel MOSFET. This signal is interlocked with LG to avoid shoot-through problems.

Copyright © 2004–2013, Texas Instruments Incorporated

ABSOLUTE MAXIMUM RATINGS [1]

If Military/Aerospace specified devices are required, contact the Texas Instruments Semiconductor Sales Office/ Distributors for availability and specifications.

V_{CC}	7V
BOOTV	21V
LG and HG to GND [2]	-2V to 21V
Junction Temperature	150°C
Storage Temperature	−65°C to 150°C
Soldering Information Lead	
Temperature (soldering, 10sec)	260°C
Infrared or Convection (20sec)	235°C
ESD Rating	2 kV

(1) Absolute maximum ratings indicate limits beyond which damage to the device may occur. **Operating ratings** indicate conditions for which the device operates correctly. **Operating Ratings** do **not imply** ensured performance limits.
(2) The LG and HG pin can have -2V to -0.5V applied for a maximum duty cycle of 10% with a maximum period of 1 second. There is no duty cycle or maximum period limitation for a LG and HG pin voltage range of -0.5V to 21V.

RECOMMENDED OPERATING CONDITIONS

Supply Voltage (V_{CC})	4.5V to 5.5V
Junction Temperature Range	−40°C to +125°C
Thermal Resistance (θ_{JA})	155°C/W

ELECTRICAL CHARACTERISTICS

V_{CC} = 5V unless otherwise indicated. Typicals and limits appearing in plain type apply for T_A=T_J=+25°C. Limits appearing in boldface type apply over full Operating Temperature Range. Datasheet min/max specification limits are specified by design, test, or statistical analysis.

Symbol	Parameter	Conditions	Min	Typ	Max	Units
V_{FB_ADJ}	FB Pin Voltage	V_{CC} = 4.5V, 0°C to +125°C	**0.591**	0.6	**0.609**	V
		V_{CC} = 5V, 0°C to +125°C	**0.591**	0.6	**0.609**	
		V_{CC} = 5.5V, 0°C to +125°C	**0.591**	0.6	**0.609**	
		V_{CC} = 4.5V, −40°C to +125°C	**0.589**	0.6	**0.609**	
		V_{CC} = 5V, −40°C to +125°C	**0.589**	0.6	**0.609**	
		V_{CC} = 5.5V, −40°C to +125°C	**0.589**	0.6	**0.609**	
V_{ON}	UVLO Thresholds	Rising Falling		4.2 3.6		V
$I_{Q\text{-}V5}$	Operating V_{CC} Current	SD = 5V, FB = 0.55V Fsw = 600kHz	**1**	1.5	**2**	mA
		SD = 5V, FB = 0.65V Fsw = 600kHz	**0.8**	1.7	**2.2**	
	Shutdown V_{CC} Current	SD = 0V	**0.15**	0.4	**0.7**	mA
t_{PWGD1}	PWGD Pin Response Time	FB Voltage Going Up		6		µs
t_{PWGD2}	PWGD Pin Response Time	FB Voltage Going Down		6		µs
I_{SD}	SD Pin Internal Pull-up Current			20		µA
$I_{SS\text{-}ON}$	SS Pin Source Current	SS Voltage = 2.5V 0°C to +125°C -40°C to +125°C	 **8** **5**	 11 11	 **15** **15**	µA
$I_{SS\text{-}OC}$	SS Pin Sink Current During Over Current	SS Voltage = 2.5V		95		µA
$I_{SEN\text{-}TH}$	I_{SEN} Pin Source Current Trip Point	0°C to +125°C -40°C to +125°C	**35** **28**	50 50	**65** **65**	µA
ERROR AMPLIFIER						
GBW	Error Amplifier Unity Gain Bandwidth			5		MHz
G	Error Amplifier DC Gain			60		dB
SR	Error Amplifier Slew Rate			6		V/µA
I_{FB}	FB Pin Bias Current	FB = 0.55V FB = 0.65V	**0** **0**	15 30	**100** **155**	nA
I_{EAO}	EAO Pin Current Sourcing and Sinking	V_{EAO} = 2.5, FB = 0.55V V_{EAO} = 2.5, FB = 0.65V		2.8 0.8		mA
V_{EA}	Error Amplifier Maximum Swing	Minimum Maximum		1.2 3.2		V
GATE DRIVE						
$I_{Q\text{-}BOOT}$	BOOT Pin Quiescent Current	BOOT = 12V, EN = 0 0°C to +125°C -40°C to +125°C		 95 95	 **160** **215**	µA
R_{DS1}	Top FET Driver Pull-Up ON resistance	BOOT-SW = 5V at 350mA		3		Ω
R_{DS2}	Top FET Driver Pull-Down ON resistance	BOOT-SW = 5V at 350mA		2		Ω
R_{DS3}	Bottom FET Driver Pull-Up ON resistance	BOOT-SW = 5V at 350mA		3		Ω
R_{DS4}	Bottom FET Driver Pull-Down ON resistance	BOOT-SW = 5V at 350mA		2		Ω

Copyright © 2004–2013, Texas Instruments Incorporated

ELECTRICAL CHARACTERISTICS (continued)

V_{CC} = 5V unless otherwise indicated. Typicals and limits appearing in plain type apply for T_A=T_J=+25°C. Limits appearing in boldface type apply over full Operating Temperature Range. Datasheet min/max specification limits are specified by design, test, or statistical analysis.

Symbol	Parameter	Conditions	Min	Typ	Max	Units
OSCILLATOR						
f_{OSC}	PWM Frequency	R_{FADJ} = 590kΩ		50		kHz
		R_{FADJ} = 88.7kΩ		300		
		R_{FADJ} = 42.2kΩ, 0°C to +125°C	**500**	600	**700**	
		R_{FADJ} = 42.2kΩ, -40°C to +125°C	**490**	600	**700**	
		R_{FADJ} = 17.4kΩ		1400		
		R_{FADJ} = 11.3kΩ		2000		
D	Max Duty Cycle	f_{PWM} = 300kHz f_{PWM} = 600kHz		90 88		%
$t_{on\text{-}min}$	Minimum on-time			40		ns
LOGIC INPUTS AND OUTPUTS						
$V_{SD\text{-}IH}$	SD Pin Logic High Trip Point			2.6	**3.5**	V
$V_{SD\text{-}IL}$	SD Pin Logic Low Trip Point	0°C to +125°C -40°C to +125°C	**1.3** **1.25**	1.6 1.6		V
$V_{PWGD\text{-}TH\text{-}LO}$	PWGD Pin Trip Points	FB Voltage Going Down 0°C to +125°C -40°C to +125°C	 **0.413** **0.410**	 0.430 0.430	 **0.446** **0.446**	V
$V_{PWGD\text{-}TH\text{-}HI}$	PWGD Pin Trip Points	FB Voltage Going Up 0°C to +125°C -40°C to +125°C	 **0.691** **0.688**	 0.710 0.710	 **0.734** **0.734**	V
$V_{PWGD\text{-}HYS}$	PWGD Hysteresis	FB Voltage Going Down FB Voltage Going Up		35 110		mV

TYPICAL PERFORMANCE CHARACTERISTICS

Efficiency (V_O = 1.5V)
F_{SW} = 300kHz, T_A = 25°C

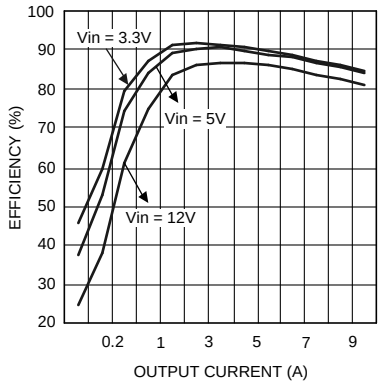

Figure 3.

Efficiency (V_O = 3.3V)
F_{SW} = 300kHz, T_A = 25°C

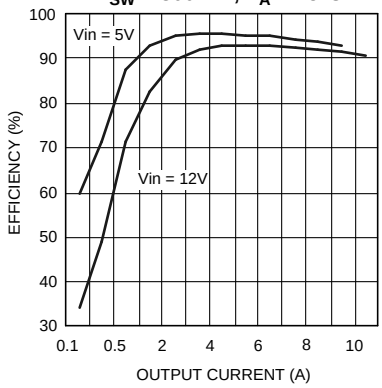

Figure 4.

V_{CC} Operating Current vs Temperature
F_{SW} = 600kHz, No-Load

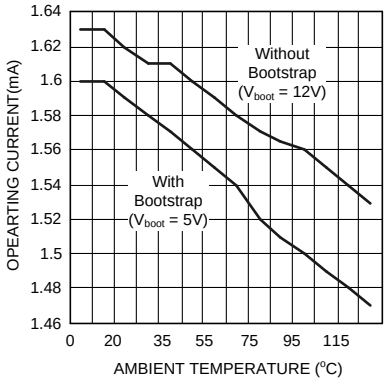

Figure 5.

Bootpin Current vs Temperature for BOOTV = 12V
F_{SW} = 600kHz, Si4826DY FET, No-Load

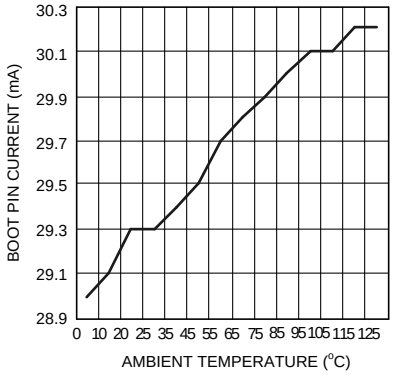

Figure 6.

Bootpin Current vs Temperature with 5V Bootstrap
F_{SW} = 600kHz, Si4826DY FET, No-Load

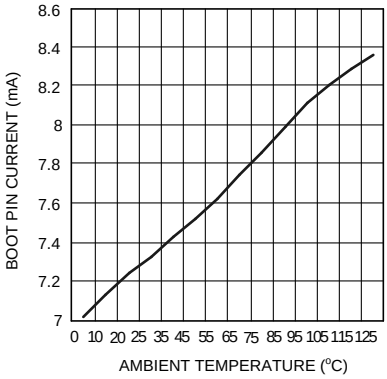

Figure 7.

PWM Frequency vs Temperature
for R_{FADJ} = 43.2kΩ

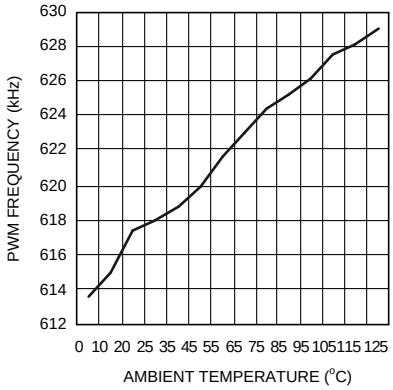

Figure 8.

Copyright © 2004–2013, Texas Instruments Incorporated

TYPICAL PERFORMANCE CHARACTERISTICS (continued)

RFADJ vs PWM Frequency (in 100 to 800kHz range), T_A = 25°C

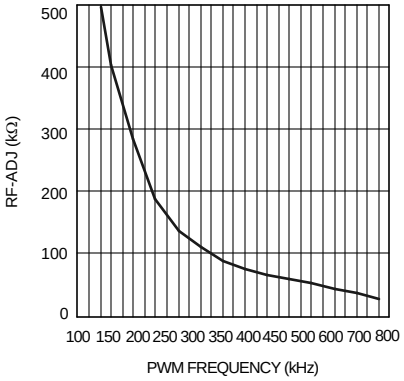

Figure 9.

R_{FADJ} vs PWM Frequency (in 900 to 2000kHz range), T_A = 25°C

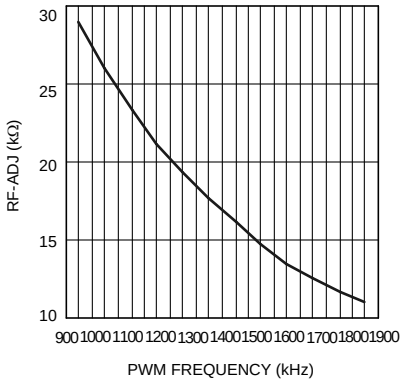

Figure 10.

V_{CC} Operating Current Plus Boot Current vs PWM Frequency (Si4826DY FET, T_A = 25°C)

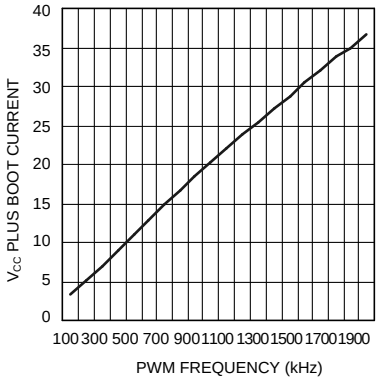

Figure 11.

Switch Waveforms (HG Falling)
V_{IN} = 5V, V_O = 1.8V
I_O = 3A, C_{SS} = 10nF, F_{SW} = 600kHz

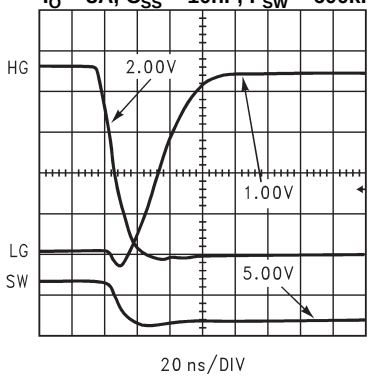

Figure 12.

Switch Waveforms (HG Rising)
V_{IN} = 5V, V_O = 1.8V
I_O = 3A, F_{SW} = 600kHz

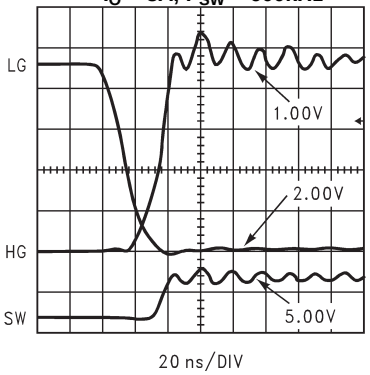

Figure 13.

Start-Up (No-Load)
V_{IN} = 10V, V_O = 1.2V
C_{SS} = 10nF, F_{SW} = 300kHz

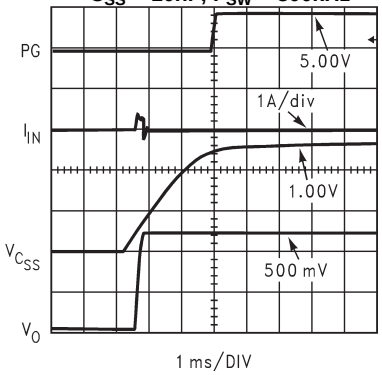

Figure 14.

TYPICAL PERFORMANCE CHARACTERISTICS (continued)

Start-Up (Full-Load)
V_{IN} = 10V, V_O = 1.2V
I_O = 10A, C_{SS} = 10nF, F_{SW} = 300kHz

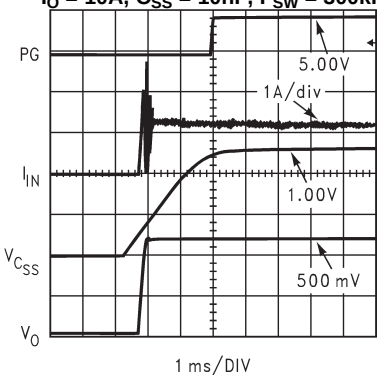

Figure 15.

Start Up (No-Load, 10x C_{SS})
V_{IN} = 10V, V_O = 1.2V
C_{SS} = 100nF, F_{SW} = 300kHz

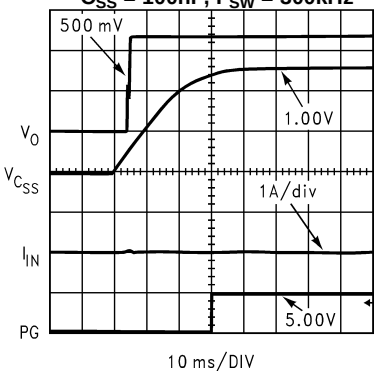

Figure 16.

Start Up (Full Load, 10x C_{SS})
V_{IN} = 10V, V_O = 1.2V
I_O = 10A, C_{SS} = 100nF, F_{SW} = 300kHz

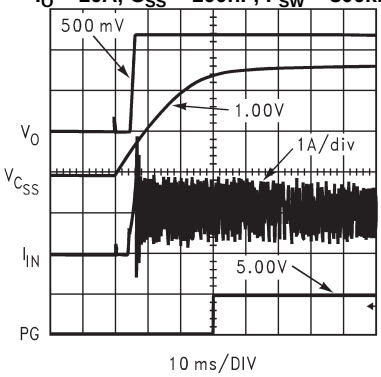

Figure 17.

Start Up (Into 1.2V Pre-Bias)
V_{IN} = 12V, V_O = 2.5V
No Load, No Soft Start Capacitor, F_{SW} = 300kHz

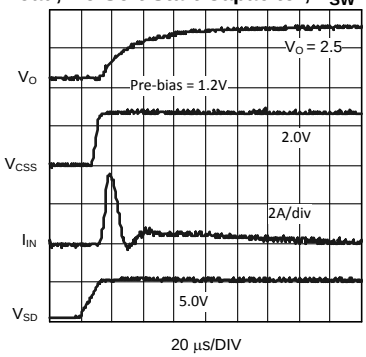

Figure 18.

Start Up (Into 1.2V Pre-Bias)
V_{IN} = 12V, V_O = 2.5V
No Load, C_{SS} = 10nF, F_{SW} = 300kHz

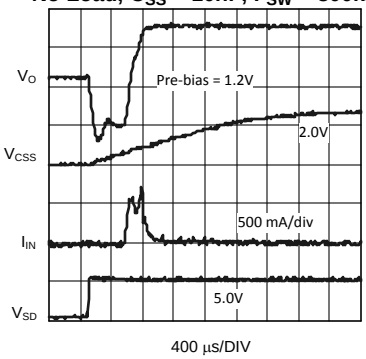

Figure 19.

Shutdown
V_{IN} = 12V, V_O = 1.2V
I_O = 10A, C_{SS} = 10nF, F_{SW} = 300kHz

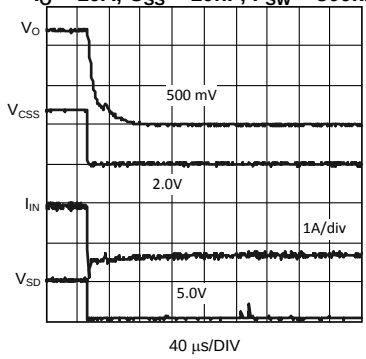

Figure 20.

Copyright © 2004–2013, Texas Instruments Incorporated

TYPICAL PERFORMANCE CHARACTERISTICS (continued)

Shutdown (No Load)
V_{IN} = 12V, V_O = 1.2V
I_O = 10A, C_{SS} = 10nF
F_{SW} = 300kHz

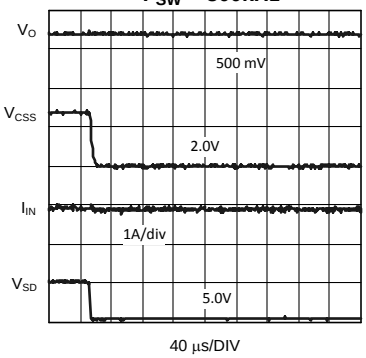

Figure 21.

Load Transient Response (I_O = 0 to 4A)
V_{IN} = 12V, V_O = 1.2V
F_{SW} = 300kHz

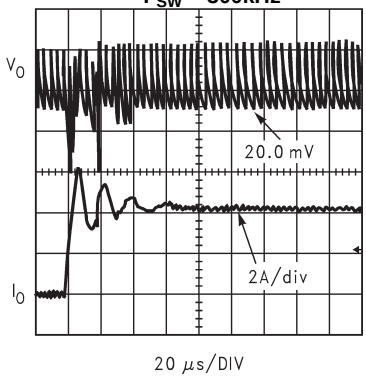

Figure 22.

Load Transient Response (I_O = 4 to 0A)
V_{IN} = 12V, V_O = 1.2V
F_{SW} = 300kHz

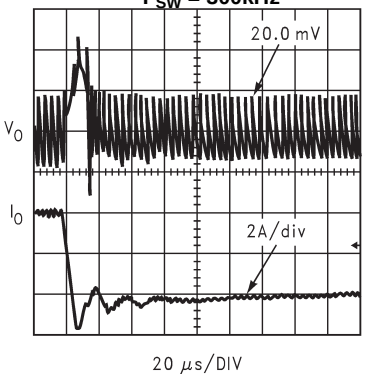

Figure 23.

Line Transient Response (V_{IN} =5V to 12V)
V_O = 1.2V, I_O = 5A
F_{SW} = 300kHz

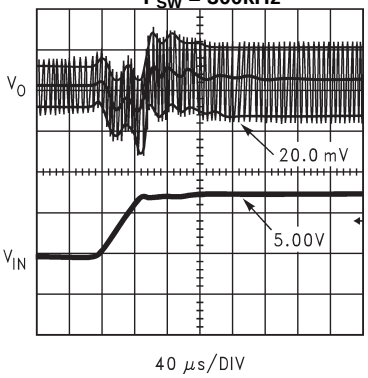

Figure 24.

Line Transient Response (V_{IN} =12V to 5V)
V_O = 1.2V, I_O = 5A
F_{SW} = 300kHz

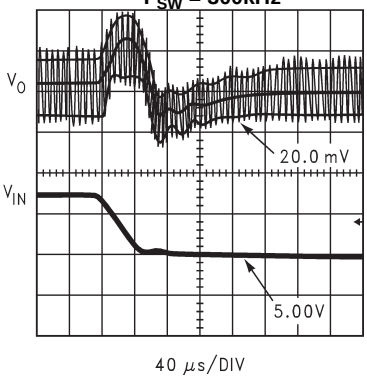

Figure 25.

Line Transient Response
V_O = 1.2V, I_O = 5A
F_{SW} = 300kHz

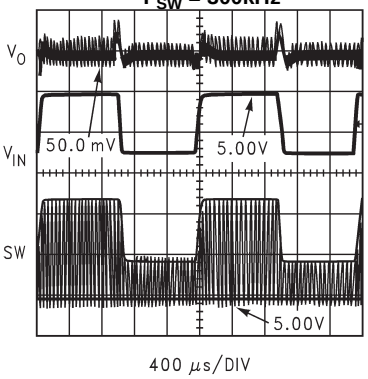

Figure 26.

TYPICAL PERFORMANCE CHARACTERISTICS (continued)

Peak Current During Current Limit
V_{IN} = 12V, V_O = 3.3V, I_{LIM} = 4A, F_{SW} = 300kHz, L = 15 µH

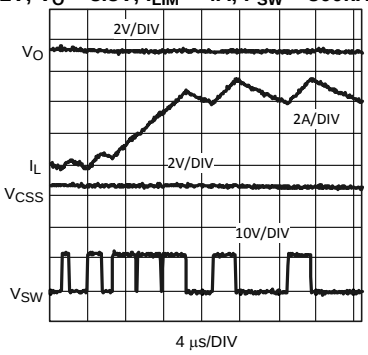

Figure 27.

Peak Current During Current Limit
V_{IN} = 12V, V_O = 3.3V, I_{LIM} = 4A, F_{SW} = 300kHz, L = 15 µH

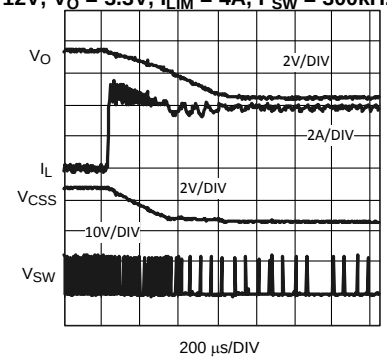

Figure 28.

Copyright © 2004–2013, Texas Instruments Incorporated

BLOCK DIAGRAM

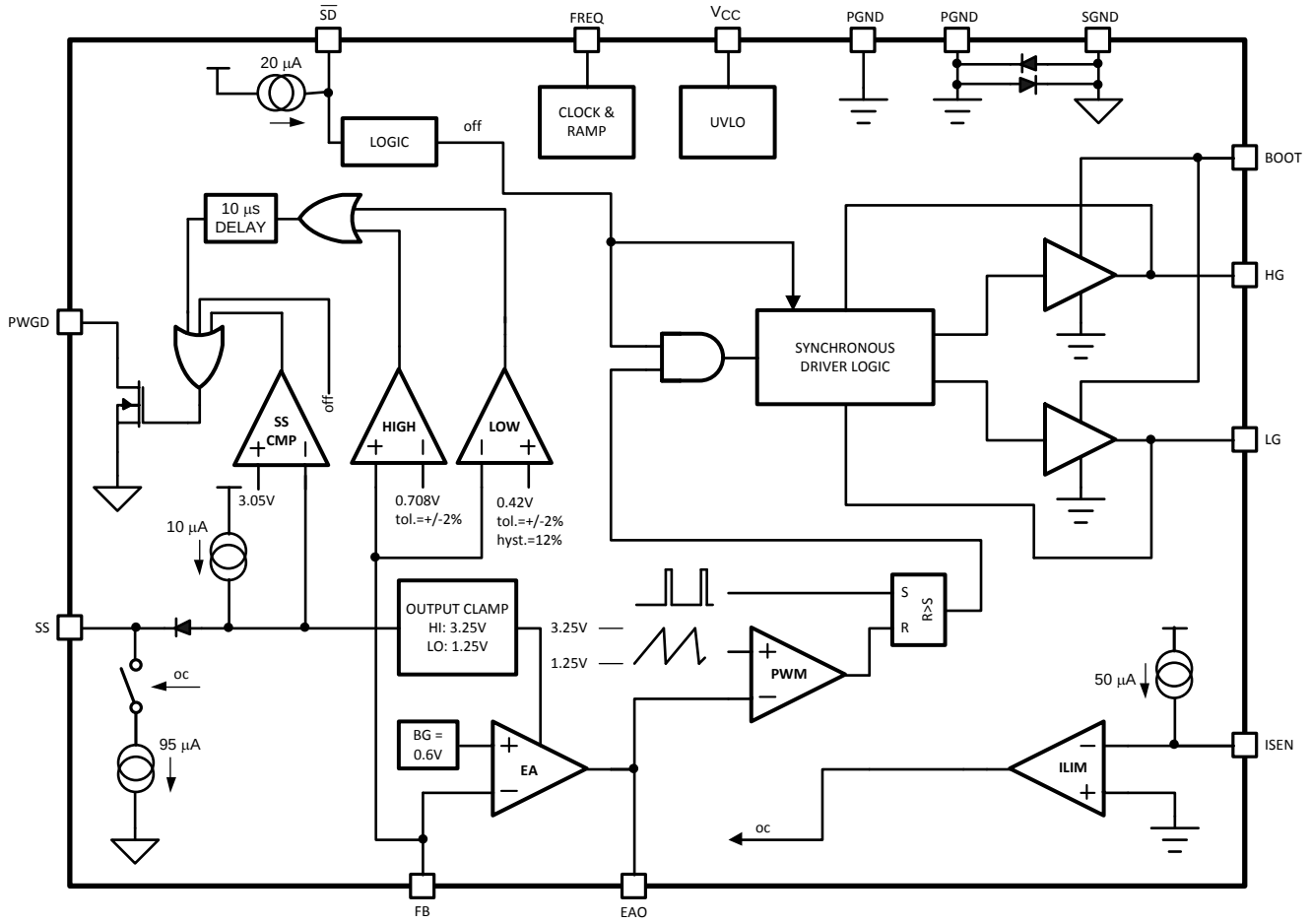

APPLICATION INFORMATION

THEORY OF OPERATION

The LM2742 is a voltage-mode, high-speed synchronous buck regulator with a PWM control scheme. It is designed for use in set-top boxes, thin clients, DSL/Cable modems, and other applications that require high efficiency buck converters. It has power good (PWRGD), and output shutdown ($\overline{SD}$). Current limit is achieved by sensing the voltage V_{DS} across the low side FET. During current limit the high side gate is turned off and the low side gate turned on. The soft start capacitor is discharged by a 95µA source (reducing the maximum duty cycle) until the current is under control.

START UP

When V_{CC} exceeds 4.2V and the shutdown pin $\overline{SD}$ sees a logic high the soft start capacitor begins charging through an internal fixed 10µA source. During this time the output of the error amplifier is allowed to rise with the voltage of the soft start capacitor. This capacitor, C_{SS}, determines soft start time, and can be determined approximately by:

$$C_{ss} = \frac{t_{ss}}{2.5 \times 10^5} \tag{1}$$

An application for a microprocessor might need a delay of 3ms, in which case C_{SS} would be 12nF. For a different device, a 100ms delay might be more appropriate, in which case C_{SS} would be 400nF. (390 10%) During soft start the PWRGD flag is forced low and is released when the voltage reaches a set value. At this point this chip enters normal operation mode and the Power Good flag is released.

Since the output is floating when the LM2742 is turned off, it is possible that the output capacitor may be precharged to some positive value. During start-up, the LM2742 operates fully synchronous and will discharge the output capacitor to some extent depending on the output voltage, soft start capacitance, and the size of the output capacitor.

NORMAL OPERATION

While in normal operation mode, the LM2742 regulates the output voltage by controlling the duty cycle of the high side and low side FETs. The equation governing output voltage is:

$$V_O = 0.6 \text{ x } (R_{FB1} + R_{FB2}) / R_{FB1} \tag{2}$$

The PWM frequency is adjustable between 50kHz and 2MHz and is set by an external resistor, R_{FADJ}, between the FREQ pin and ground. The resistance needed for a desired frequency is approximately:

$$R_{FADJ} = \left(\frac{20500}{\text{freq}\left[\text{kHz}\right]}\right)^{1.0526} \text{k}\Omega \tag{3}$$

MOSFET GATE DRIVERS

The LM2742 has two gate drivers designed for driving N-channel MOSFETs in a synchronous mode. Power for the drivers is supplied through the BOOT pin. For the high side gate (HG) to fully turn on the top FET, the BOOT voltage must be at least one $V_{GS(th)}$ greater than Vin. (BOOT ≥ 2*Vin) This voltage can be supplied by a separate, higher voltage source, or supplied from a local charge pump structure. In a system such as a desktop computer, both 5V and 12V are usually available. Hence if Vin was 5V, the 12V supply could be used for BOOT. 12V is more than 2*Vin, so the HG would operate correctly. For a BOOT of 12V, the initial gate charging current is 2A, and the initial gate discharging current is typically 6A.

Copyright © 2004–2013, Texas Instruments Incorporated

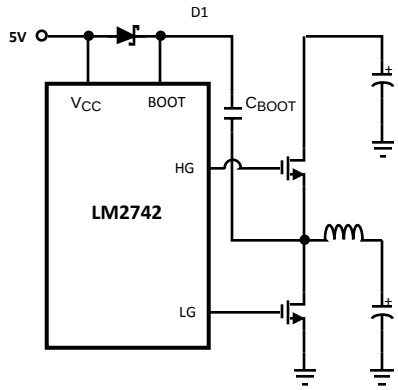

Figure 29. BOOT Supplied by Charge Pump

In a system without a separate, higher voltage, a charge pump (bootstrap) can be built using a diode and small capacitor, Figure 29. The capacitor serves to maintain enough voltage between the top FET gate and source to control the device even when the top FET is on and its source has risen up to the input voltage level.

The LM2742 gate drives use a BiCMOS design. Unlike some other bipolar control ICs, the gate drivers have rail-to-rail swing, ensuring no spurious turn-on due to capacitive coupling.

POWER GOOD SIGNAL

The power good signal is the or-gated flag representing over-voltage and under-voltage protection. If the output voltage is 18% over it's nominal value, V_{FB} = 0.7V, or falls 30% below that value, V_{FB} = 0.41V, the power good flag goes low. It will return to a logic high whenever the feedback pin voltage is between 70% and 118% of 0.6V. The power good pin is an open drain output that can be pulled up to logic voltages of 5V or less with a 10kΩ resistor.

UVLO

The 4.2V turn-on threshold on V_{CC} has a built in hysteresis of 0.6V. Therefore, if V_{CC} drops below 3.6V, the chip enters UVLO mode. UVLO consists of turning off the top FET, turning off the bottom FET, and remaining in that condition until V_{CC} rises above 4.2V. As with shutdown, the soft start capacitor is discharged through a FET, ensuring that the next start-up will be smooth.

CURRENT LIMIT

Current limit is realized by sensing the voltage across the low side FET while it is on. The R_{DSON} of the FET is a known value, hence the current through the FET can be determined as:

$$V_{DS} = I * R_{DSON} \quad (4)$$

The current through the low side FET while it is on is also the falling portion of the triangle wave inductor current. The current limit threshold is determined by an external resistor, R_{CS}, connected between the switch node and the I_{SEN} pin. A constant current of 50 µA is forced through R_{CS}, causing a fixed voltage drop. This fixed voltage is compared against V_{DS} and if the latter is higher, the current limit of the chip has been reached. R_{CS} can be found by using the following equation:

$$R_{CS} = R_{DSON}(LOW) * I_{LIM}/50\mu A \quad (5)$$

For example, a conservative 15A current limit in a 10A design with a minimum R_{DSON} of 10mΩ would require a 3.3kΩ resistor. Because current sensing is done across the low side FET, no minimum high side on-time is necessary. In the current limit mode the LM2727/37 will turn the high side off and the keep low side on for as long as necessary. The LM2727/37 enters current limit mode if the inductor current exceeds the current limit threshold at the point where the high side FET turns off and the low side FET turns on. (The point of peak inductor current. See Figure 30.) Note that in normal operation mode the high side FET always turns on at the

Copyright © 2004–2013, Texas Instruments Incorporated

beginning of a clock cycle. In current limit mode, by contrast, the high side FET on pulse is skipped. This causes inductor current to fall. Unlike a normal operation switching cycle, however, in a current limit mode switching cycle the high side FET will turn on as soon as inductor current has fallen to the current limit threshold. The LM2727/37 will continue to skip high side FET pulses until the inductor current peak is below the current limit threshold, at which point the system resumes normal operation.

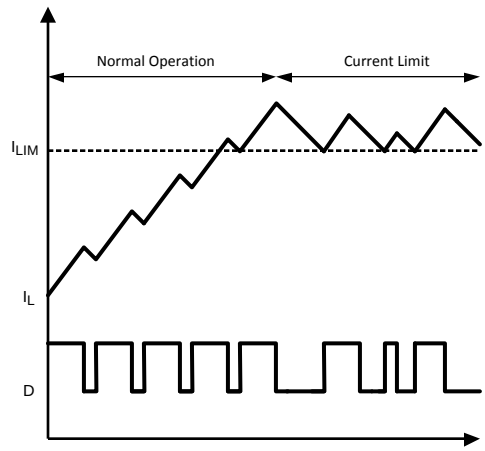

Figure 30. Current Limit Threshold

Unlike a high side FET current sensing scheme, which limits the peaks of inductor current, low side current sensing is only allowed to limit the current during the converter off-time, when inductor current is falling. Therefore in a typical current limit plot the valleys are normally well defined, but the peaks are variable, according to the duty cycle. The PWM error amplifier and comparator control the off pulse of the high side FET, even during current limit mode, meaning that peak inductor current can exceed the current limit threshold. Assuming that the output inductor does not saturate, the maximum peak inductor current during current limit mode can be calculated with the following equation:

$$I_{PK\text{-}CL} = I_{LIM} + \left(T_{OSC} - 200\text{ ns}\right)\frac{V_{IN} - V_O}{L} \tag{6}$$

Where T_{OSC} is the inverse of switching frequency f_{OSC}. The 200ns term represents the minimum off-time of the duty cycle, which ensures enough time for correct operation of the current sensing circuitry. See the plots entitled Peak Current During Current Limit in the *Typical Performance Characteristics* section.

In order to minimize the time period in which peak inductor current exceeds the current limit threshold, the IC also discharges the soft start capacitor through a fixed 95 µA source. The output of the LM2727/37 internal error amplifier is limited by the voltage on the soft start capacitor. Hence, discharging the soft start capacitor reduces the maximum duty cycle D of the controller. During severe current limit this reduction in duty cycle will reduce the output voltage if the current limit conditions last for an extended time. Output inductor current will be reduced in turn to a flat level equal to the current limit threshold. The third benefit of the soft start capacitor discharge is a smooth, controlled ramp of output voltage when the current limit condition is cleared. During the first few nanoseconds after the low side gate turns on, the low side FET body diode conducts. This causes an additional 0.7V drop in V_{DS}. The range of V_{DS} is normally much lower. For example, if R_{DSON} were 10mΩ and the current through the FET was 10A, V_{DS} would be 0.1V. The current limit would see 0.7V as a 70A current and enter current limit immediately. Hence current limit is masked during the time it takes for the high side switch to turn off and the low side switch to turn on.

SHUT DOWN

If the shutdown pin $\overline{SD}$ is pulled low, the LM2742 discharges the soft start capacitor through a MOSFET switch. The high side and low side switches are turned off. The LM2742 remains in this state until $\overline{SD}$ is released.

Copyright © 2004–2013, Texas Instruments Incorporated

DESIGN CONSIDERATIONS

The following is a design procedure for all the components needed to create the circuit shown in Figure 32 in the Example Circuits section, a 5V in to 1.2V out converter, capable of delivering 10A with an efficiency of 85%. The switching frequency is 300kHz. The same procedures can be followed to create many other designs with varying input voltages, output voltages, and output currents.

Input Capacitor

The input capacitors in a Buck switching converter are subjected to high stress due to the input current waveform, which is a square wave. Hence input caps are selected for their ripple current capability and their ability to withstand the heat generated as that ripple current runs through their ESR. Input rms ripple current is approximately:

$$I_{rms_rip} = I_o * \sqrt{D(1 - D)}\text{png} \tag{7}$$

The power dissipated by each input capacitor is:

$$P_D = \frac{I^2_{rms-rip} * ESR}{n^2} \tag{8}$$

Here, n is the number of capacitors, and indicates that power loss in each cap decreases rapidly as the number of input caps increase. The worst-case ripple for a Buck converter occurs during full load, when the duty cycle D = 50%.

In the 5V to 1.2V case, D = 1.2/5 = 0.24. With a 10A maximum load the ripple current is 4.3A. The Sanyo 10MV5600AX aluminum electrolytic capacitor has a ripple current rating of 2.35A, up to 105°C. Two such capacitors make a conservative design that allows for unequal current sharing between individual caps. Each capacitor has a maximum ESR of 18mΩ at 100 kHz. Power loss in each device is then 0.05W, and total loss is 0.1W. Other possibilities for input and output capacitors include MLCC, tantalum, OSCON, SP, and POSCAPS.

Input Inductor

The input inductor serves two basic purposes. First, in high power applications, the input inductor helps insulate the input power supply from switching noise. This is especially important if other switching converters draw current from the same supply. Noise at high frequency, such as that developed by the LM2742 at 1MHz operation, could pass through the input stage of a slower converter, contaminating and possibly interfering with its operation.

An input inductor also helps shield the LM2742 from high frequency noise generated by other switching converters. The second purpose of the input inductor is to limit the input current slew rate. During a change from no-load to full-load, the input inductor sees the highest voltage change across it, equal to the full load current times the input capacitor ESR. This value divided by the maximum allowable input current slew rate gives the minimum input inductance:

$$L_{in} = \frac{\Delta V}{\left(\frac{di}{dt}\right)_{max}} \tag{9}$$

In the case of a desktop computer system, the input current slew rate is the system power supply or "silver box" output current slew rate, which is typically about 0.1A/µs. Total input capacitor ESR is 9mΩ, hence ΔV is 10*0.009 = 90 mV, and the minimum inductance required is 0.9µH. The input inductor should be rated to handle the DC input current, which is approximated by:

$$I_{IN-DC} = \frac{I_O * D}{\eta} \tag{10}$$

In this case I_{IN-DC} is about 2.8A. One possible choice is the TDK SLF12575T-1R2N8R2, a 1.2µH device that can handle 8.2Arms, and has a DCR of 7mΩ.

Output Inductor

The output inductor forms the first half of the power stage in a Buck converter. It is responsible for smoothing the square wave created by the switching action and for controlling the output current ripple. (ΔI_o) The inductance is chosen by selecting between tradeoffs in output ripple, efficiency, and response time. The smaller the output inductor, the more quickly the converter can respond to transients in the load current. If the inductor value is increased, the ripple through the output capacitor is reduced and thus the output ripple is reduced. As shown in the efficiency calculations, a smaller inductor requires a higher switching frequency to maintain the same level of output current ripple. An increase in frequency can mean increasing loss in the FETs due to the charging and discharging of the gates. Generally the switching frequency is chosen so that conduction loss outweighs switching loss. The equation for output inductor selection is:

$$L = \frac{V_{in} - V_O}{\Delta i_O * F_{SW}} * D \tag{11}$$

A good range for ΔI_o is 25 to 50% of the output current. In the past, 30% was considered a maximum value for output currents higher than about 2Amps, but as output capacitor technology improves the ripple current can be allowed to increase. Plugging in the values for output current ripple, input voltage, output voltage, switching frequency, and assuming a 40% peak-to-peak output current ripple yields an inductance of 1.5µH. The output inductor must be rated to handle the peak current (also equal to the peak switch current), which is (Io + 0.5*ΔI_o). This is 12A for a 10A design. The Coilcraft D05022-152HC is 1.5µH, is rated to 15Arms, and has a DCR of 4mΩ.

Output Capacitor

The output capacitor forms the second half of the power stage of a Buck switching converter. It is used to control the output voltage ripple (ΔV_o) and to supply load current during fast load transients.

In this example the output current is 10A and the expected type of capacitor is an aluminum electrolytic, as with the input capacitors. (Other possibilities include ceramic, tantalum, and solid electrolyte capacitors, however the ceramic type often do not have the large capacitance needed to supply current for load transients, and tantalums tend to be more expensive than aluminum electrolytic.) Aluminum capacitors tend to have very high capacitance and fairly low ESR, meaning that the ESR zero, which affects system stability, will be much lower than the switching frequency. The large capacitance means that at switching frequency, the ESR is dominant, hence the type and number of output capacitors is selected on the basis of ESR. One simple formula to find the maximum ESR based on the desired output voltage ripple, ΔV_o and the designed output current ripple, ΔI_o, is:

$$ESR_{MAX} = \frac{\Delta V_o}{\Delta I_o} \tag{12}$$

In this example, in order to maintain a 2% peak-to-peak output voltage ripple and a 40% peak-to-peak inductor current ripple, the required maximum ESR is 6mΩ. Three Sanyo 10MV5600AX capacitors in parallel will give an equivalent ESR of 6mΩ. The total bulk capacitance of 16.8mF is enough to supply even severe load transients. Using the same capacitors for both input and output also keeps the bill of materials simple.

MOSFETS

MOSFETS are a critical part of any switching controller and have a direct impact on the system efficiency. In this case the target efficiency is 85% and this is the variable that will determine which devices are acceptable. Loss from the capacitors, inductors, and the LM2742 is detailed in the Efficiency section, and come to about 0.54W. To meet the target efficiency, this leaves 1.45W for the FET conduction loss, gate charging loss, and switching loss. Switching loss is particularly difficult to estimate because it depends on many factors. When the load current is more than about 1 or 2 amps, conduction losses outweigh the switching and gate charging losses. This allows FET selection based on the R_{DSON} of the FET. Adding the FET switching and gate-charging losses to the equation leaves 1.2W for conduction losses. The equation for conduction loss is:

$$P_{Cnd} = D(I^2_o * R_{DSON} * k) + (1-D)(I^2_o * R_{DSON} * k) \tag{13}$$

The factor k is a constant which is added to account for the increasing R_{DSON} of a FET due to heating. Here, k = 1.3. The Si4442DY has a typical R_{DSON} of 4.1mΩ. When plugged into the equation for P_{CND} the result is a loss of 0.533W. If this design were for a 5V to 2.5V circuit, an equal number of FETs on the high and low sides would be the best solution. With the duty cycle D = 0.24, it becomes apparent that the low side FET carries the load current 76% of the time. Adding a second FET in parallel to the bottom FET could improve the efficiency by lowering the effective R_{DSON}. The lower the duty cycle, the more effective a second or even third FET can be. For a minimal increase in gate charging loss (0.054W) the decrease in conduction loss is 0.15W. What was an 85% design improves to 86% for the added cost of one SO-8 MOSFET.

Copyright © 2004–2013, Texas Instruments Incorporated

Control Loop Components

The circuit is this design example and the others shown in the Example Circuits section have been compensated to improve their DC gain and bandwidth. The result of this compensation is better line and load transient responses. For the LM2742, the top feedback divider resistor, Rfb2, is also a part of the compensation. For the 10A, 5V to 1.2V design, the values are:

Cc1 = 4.7pF 10%, Cc2 = 1nF 10%, Rc = 229kΩ 1%. These values give a phase margin of 63° and a bandwidth of 29.3kHz.

Support Capacitors and Resistors

The Cinx capacitors are high frequency bypass devices, designed to filter harmonics of the switching frequency and input noise. Two 1µF ceramic capacitors with a sufficient voltage rating (10V for the Circuit of Figure 32) will work well in almost any case.

R_{IN} and C_{IN} are standard filter components designed to ensure smooth DC voltage for the chip supply. Depending on noise, R_{IN} should be 10 to 100Ω, and C_{IN} should be between 0.1 and 2.2 µF. C_{BOOT} is the bootstrap capacitor, and should be 0.1µF. (In the case of a separate, higher supply to the BOOT pin, this 0.1µF cap can be used to bypass the supply.) Using a Schottky device for the bootstrap diode allows the minimum drop for both high and low side drivers. The On Semiconductor BAT54 or MBR0520 work well.

Rp is a standard pull-up resistor for the open-drain power good signal, and should be 10kΩ. If this feature is not necessary, it can be omitted.

R_{CS} is the resistor used to set the current limit. Since the design calls for a peak current magnitude (Io + 0.5 * ΔI_o) of 12A, a safe setting would be 15A. (This is well below the saturation current of the output inductor, which is 25A.) Following the equation from the Current Limit section, use a 3.3kΩ resistor.

R_{FADJ} is used to set the switching frequency of the chip. Following the equation in the Theory of Operation section, the closest 1% tolerance resistor to obtain f_{SW} = 300kHz is 88.7kΩ.

C_{SS} depends on the users requirements. Based on the equation for C_{SS} in the Theory of Operation section, for a 3ms delay, a 12nF capacitor will suffice.

EFFICIENCY CALCULATIONS

A reasonable estimation of the efficiency of a switching controller can be obtained by adding together the loss is each current carrying element and using the equation:

$$\eta = \frac{P_o}{P_o + P_{total-loss}} \tag{14}$$

The following shows an efficiency calculation to complement the Circuit of Figure 32. Output power for this circuit is 1.2V x 10A = 12W.

Chip Operating Loss

$$P_{IQ} = I_{Q\text{-}Vcc} * V_{CC} \tag{15}$$

2mA x 5V = 0.01W

FET Gate Charging Loss

$$P_{GC} = n * V_{CC} * Q_{GS} * f_{OSC} \tag{16}$$

The value n is the total number of FETs used. The Si4442DY has a typical total gate charge, Q_{GS}, of 36nC and an $r_{ds\text{-}on}$ of 4.1mΩ. For a single FET on top and bottom: $2*5*36E^{-9}*300{,}000 = 0.108W$

FET Switching Loss

$$P_{SW} = 0.5 * V_{in} * I_O * (t_r + t_f) * f_{OSC} \tag{17}$$

The Si4442DY has a typical rise time t_r and fall time t_f of 11 and 47ns, respectively. $0.5*5*10*58E^{-9}*300{,}000 = 0.435W$

FET Conduction Loss

$$P_{Cn} = 0.533W \tag{18}$$

Input Capacitor Loss

$$P_{Cin} = \frac{I^2_{rms-rip} * ESR}{n} \quad (19)$$

$$I_{INrms-rip} = I_O * \sqrt{D(1-D)} \quad (20)$$

4.28^2*0.018/2 = 0.164W

Input Inductor Loss

$$P_{Lin} = I^2_{in} * DCR_{input-L} \quad (21)$$

$$I_{IN} = \frac{I_O * D}{\eta_{est'd}} \quad (22)$$

2.82^2*0.007 = 0.055W

Output Inductor Loss

$$P_{Lout} = I^2_o * DCR_{output-L} \quad (23)$$

10^2*0.004 = 0.4W

System Efficiency

$$\frac{12}{22+1.7} = 87.5\% \quad (24)$$

Example Circuits

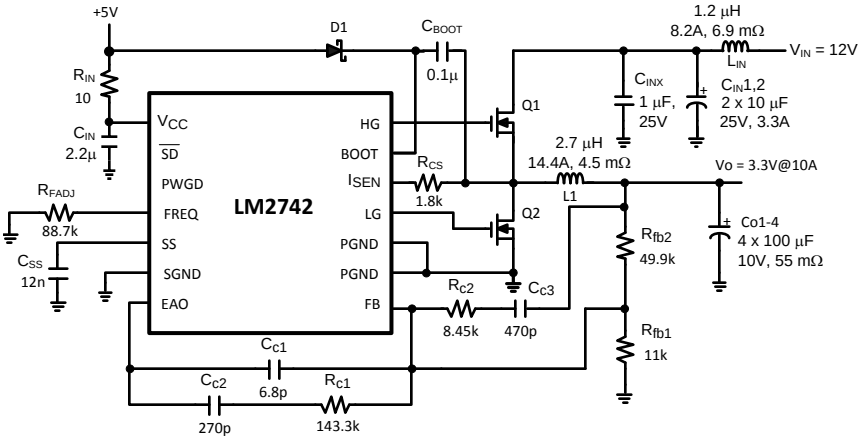

Figure 31. 5V-16V to 3.3V, 10A, 300kHz

This circuit and the one featured on the front page have been designed to deliver high current and high efficiency in a small package, both in area and in height The tallest component in this circuit is the inductor L1, which is 6mm tall. The compensation has been designed to tolerate input voltages from 5 to 16V.

Copyright © 2004–2013, Texas Instruments Incorporated

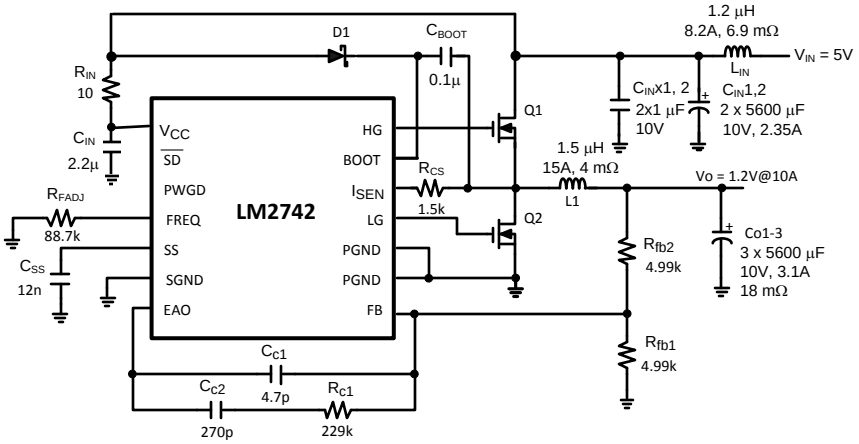

Figure 32. 5V to 1.2V, 10A, 300kHz

This circuit design, detailed in the Design Considerations section, uses inexpensive aluminum capacitors and off-the-shelf inductors. It can deliver 10A at better than 85% efficiency. Large bulk capacitance on input and output ensure stable operation.

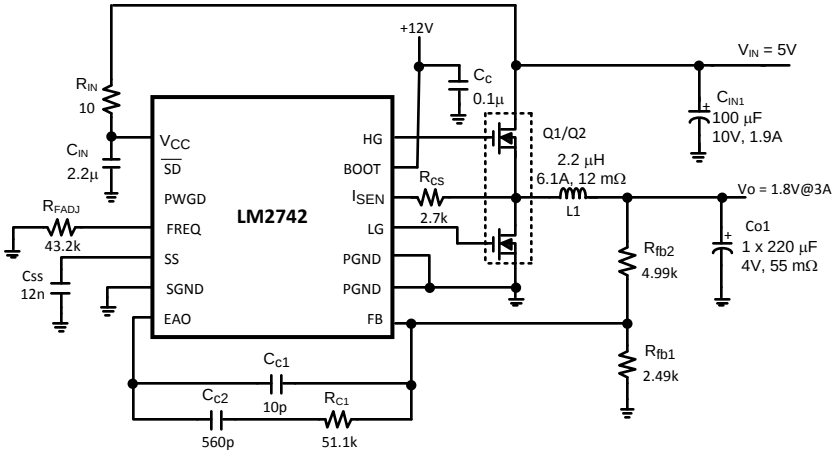

Figure 33. 5V to 1.8V, 3A, 600kHz

The example circuit of Figure 33 has been designed for minimum component count and overall solution size. A switching frequency of 600kHz allows the use of small input/output capacitors and a small inductor. The availability of separate 5V and 12V supplies (such as those available from desk-top computer supplies) and the low current further reduce component count. Using the 12V supply to power the MOSFET drivers eliminates the bootstrap diode, D1. At low currents, smaller FETs or dual FETs are often the most efficient solutions. Here, the Si4826DY, an asymmetric dual FET in an SO-8 package, yields 92% efficiency at a load of 2A.

Copyright © 2004–2013, Texas Instruments Incorporated

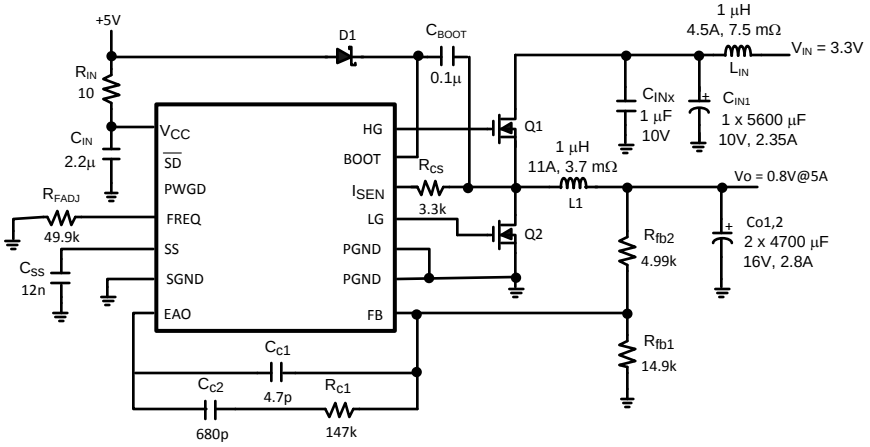

Figure 34. 3.3V to 0.8V, 5A, 500kHz

The circuit of Figure 34 demonstrates the LM2742 delivering a low output voltage at high efficiency (87%). A separate 5V supply is required to run the chip, however the input voltage can be as low as 2.2

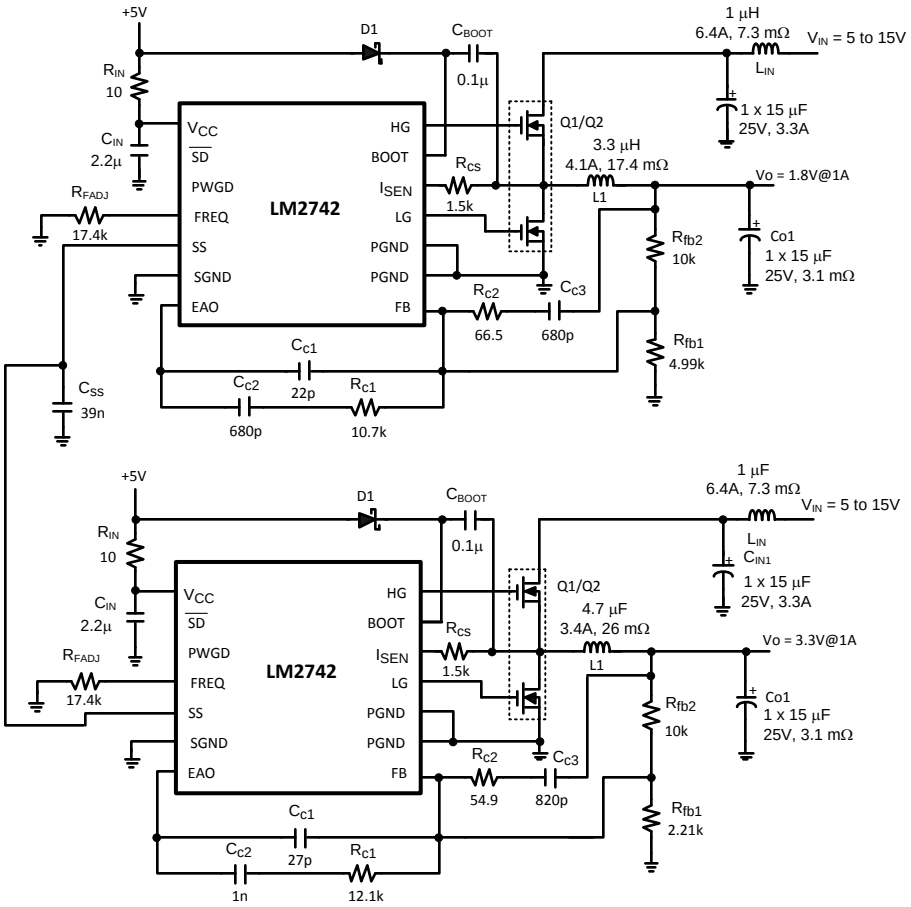

Figure 35. 1.8V and 3.3V, 1A, 1.4MHz, Simultaneous

Copyright © 2004–2013, Texas Instruments Incorporated

The circuits in Figure 35 are intended for ADSL applications, where the high switching frequency keeps noise out of the data transmission range. In this design, the 1.8 and 3.3V outputs come up simultaneously by using the same softstart capacitor. Because two current sources now charge the same capacitor, the capacitance must be doubled to achieve the same softstart time. (Here, 40nF is used to achieve a 5ms softstart time.) A common softstart capacitor means that, should one circuit enter current limit, the other circuit will also enter current limit. The additional compensation components Rc2 and Cc3 are needed for the low ESR, all ceramic output capacitors, and the wide (3x) range of Vin.

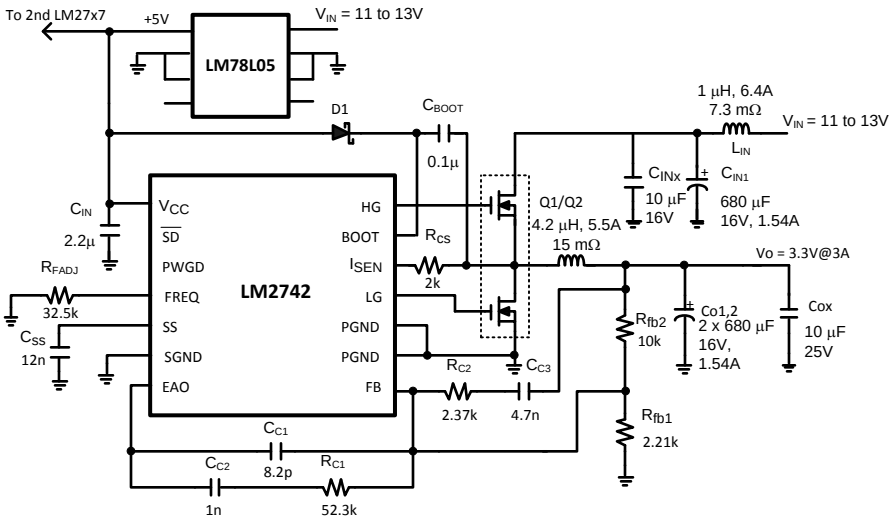

Figure 36. 12V Unregulated to 3.3V, 3A, 750kHz

This circuit shows the LM2742 paired with a cost effective solution to provide the 5V chip power supply, using no extra components other than the LM78L05 regulator itself. The input voltage comes from a 'brick' power supply which does not regulate the 12V line tightly. Additional, inexpensive 10uF ceramic capacitors (Cinx and Cox) help isolate devices with sensitive databands, such as DSL and cable modems, from switching noise and harmonics.

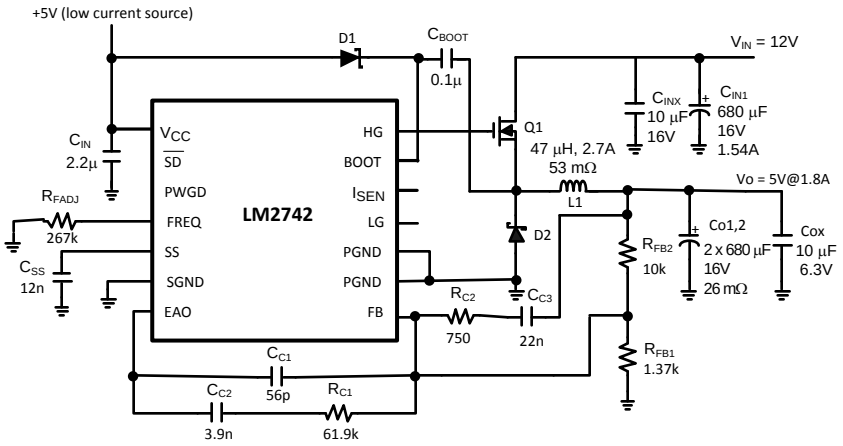

Figure 37. 12V to 5V, 1.8A, 100kHz

In situations where low cost is very important, the LM2742 can also be used as an asynchronous controller, as shown in the above circuit. Although a a schottky diode in place of the bottom FET will not be as efficient, it will cost much less than the FET. The 5V at low current needed to run the LM2742 could come from a zener diode or inexpensive regulator, such as the one shown in Figure 36. Because the LM2742 senses current in the low side MOSFET, the current limit feature will not function in an asynchronous design. The ISEN pin should be left open in this case.

Copyright © 2004–2013, Texas Instruments Incorporated

Table 1. Bill of Materials for Typical Application Circuit (Figure 1)

ID	Part Number	Type	Size	Parameters	Qty.	Vendor
U1	LM2742	Synchronous Controller	TSSOP-14	TSSOP-14	1	NSC
Q1, Q2	Si4884DY	N-MOSFET	SO-8	30V, 13mΩ, 15nC	1	Vishay
L1	RLF7030T-1R5N6R1	Inductor	7.1x7.1x3.2mm	1.5µH, 6.1A 9.6mΩ	1	TDK
Cin1, Cin2	C2012X5R1J106M	MLCC	0805	10µF 6.3V	2	TDK
Cinx	C3216X7R1E105K	Capacitor	1206	1µF, 25V	1	TDK
Co1, Co2	6MV2200WG	AL-E	10mm D 20mm H	2200µF 6.3V125mΩ	2	Sanyo
Cboot	VJ1206X104XXA	Capacitor	1206	0.1µF, 25V	1	Vishay
Cin	C3216X7R1E225K	Capacitor	1206	2.2µF, 25V	1	TDK
Css	VJ1206X123KXX	Capacitor	1206	12nF, 25V	1	Vishay
Cc1	VJ1206A2R2KXX	Capacitor	1206	2.2pF 10%	1	Vishay
Cc2	VJ1206A181KXX	Capacitor	1206	180pF 10%	1	Vishay
Rin	CRCW1206100J	Resistor	1206	10Ω 5%	1	Vishay
Rfadj	CRCW12066342F	Resistor	1206	63.4kΩ 1%	1	Vishay
Rc1	CRCW12063923F	Resistor	1206	392kΩ 1%	1	Vishay
Rfb1	CRCW12061002F	Resistor	1206	10kΩ 1%	1	Vishay
Rfb2	CRCW12061002F	Resistor	1206	10kΩ 1%	1	Vishay
Rcs	CRCW1206222J	Resistor	1206	2.2kΩ 5%	1	Vishay

Table 2. Bill of Materials for Circuit of Figure 31 (Identical to BOM for 1.5V except as noted below)

ID	Part Number	Type	Size	Parameters	Qty.	Vendor
L1	RLF12560T-2R7N110	Inductor	12.5x12.8x6mm	2.7µH, 14.4A 4.5mΩ	1	TDK
Co1, Co2, Co3, Co4	10TPB100M	POSCAP	7.3x4.3x2.8mm	100µF 10V 1.9Arms	4	Sanyo
Cc1	VJ1206A6R8KXX	Capacitor	1206	6.8pF 10%	1	Vishay
Cc2	VJ1206A271KXX	Capacitor	1206	270pF 10%	1	Vishay
Cc3	VJ1206A471KXX	Capacitor	1206	470pF 10%	1	Vishay
Rc2	CRCW12068451F	Resistor	1206	8.45kΩ 1%	1	Vishay
Rfb1	CRCW12061102F	Resistor	1206	11kΩ 1%	1	Vishay

Table 3. Bill of Materials for Circuit of Figure 32

ID	Part Number	Type	Size	Parameters	Qty.	Vendor
U1	LM2742	Synchronous Controller	TSSOP-14		1	NSC
Q1	Si4442DY	N-MOSFET	SO-8	30V, 4.1mΩ, @ 4.5V, 36nC	1	Vishay
Q2	Si4442DY	N-MOSFET	SO-8	30V, 4.1mΩ, @ 4.5V, 36nC	1	Vishay
D1	BAT-54	Schottky Diode	SOT-23	30V	1	Vishay
Lin	SLF12575T-1R2N8R2	Inductor	12.5x12.5x7.5mm	12µH, 8.2A, 6.9mΩ	1	Coilcraft
L1	D05022-152HC	Inductor	22.35x16.26x8mm	1.5µH, 15A,4mΩ	1	Coilcraft
Cin1, Cin2	10MV5600AX	Aluminum Electrolytic	16mm D 25mm H	5600µF10V 2.35Arms	2	Sanyo
Cinx	C3216X7R1E105K	Capacitor	1206	1µF, 25V	1	TDK
Co1, Co2, Co3	10MV5600AX	Aluminum Electrolytic	16mm D 25mm H	5600µF10V 2.35Arms	2	Sanyo
Cboot	VJ1206X104XXA	Capacitor	1206	0.1µF, 25V	1	Vishay
Cin	C3216X7R1E225K	Capacitor	1206	2.2µF, 25V	1	TDK
Css	VJ1206X123KXX	Capacitor	1206	12nF, 25V	1	Vishay
Cc1	VJ1206A4R7KXX	Capacitor	1206	4.7pF 10%	1	Vishay

Copyright © 2004–2013, Texas Instruments Incorporated

Table 3. Bill of Materials for Circuit of Figure 32 (continued)

ID	Part Number	Type	Size	Parameters	Qty.	Vendor
Cc2	VJ1206A102KXX	Capacitor	1206	1nF 10%	1	Vishay
Rin	CRCW1206100J	Resistor	1206	10Ω 5%	1	Vishay
Rfadj	CRCW12068872F	Resistor	1206	88.7kΩ 1%	1	Vishay
Rc1	CRCW12062293F	Resistor	1206	229kΩ 1%	1	Vishay
Rfb1	CRCW12064991F	Resistor	1206	4.99kΩ 1%	1	Vishay
Rfb2	CRCW12064991F	Resistor	1206	4.99kΩ 1%	1	Vishay
Rcs	CRCW1206152J	Resistor	1206	1.5kΩ 5%	1	Vishay

Table 4. Bill of Materials for Circuit of Figure 33

ID	Part Number	Type	Size	Parameters	Qty.	Vendor
U1	LM2742	Synchronous Controller	TSSOP-14		1	NSC
Q1/Q2	Si4826DY	Asymetric Dual N-MOSFET	SO-8	30V, 24mΩ/ 8nC Top 16.5mΩ/ 15nC	1	Vishay
L1	DO3316P-222	Inductor	12.95x9.4x 5.21mm	2.2µH, 6.1A, 12mΩ	1	Coilcraft
Cin1	10TPB100ML	POSCAP	7.3x4.3x3.1mm	100µF 10V 1.9Arms	1	Sanyo
Co1	4TPB220ML	POSCAP	7.3x4.3x3.1mm	220µF 4V 1.9Arms	1	Sanyo
Cc	C3216X7R1E105K	Capacitor	1206	1µF, 25V	1	TDK
Cin	C3216X7R1E225K	Capacitor	1206	2.2µF, 25V	1	TDK
Css	VJ1206X123KXX	Capacitor	1206	12nF, 25V	1	Vishay
Cc1	VJ1206A100KXX	Capacitor	1206	10pF 10%	1	Vishay
Cc2	VJ1206A561KXX	Capacitor	1206	560pF 10%	1	Vishay
Rin	CRCW1206100J	Resistor	1206	10Ω 5%	1	Vishay
Rfadj	CRCW12064222F	Resistor	1206	42.2kΩ 1%	1	Vishay
Rc1	CRCW12065112F	Resistor	1206	51.1kΩ 1%	1	Vishay
Rfb1	CRCW12062491F	Resistor	1206	2.49kΩ 1%	1	Vishay
Rfb2	CRCW12064991F	Resistor	1206	4.99kΩ 1%	1	Vishay
Rcs	CRCW1206272J	Resistor	1206	2.7kΩ 5%	1	Vishay

Table 5. Bill of Materials for Circuit of Figure 34

ID	Part Number	Type	Size	Parameters	Qty.	Vendor
U1	LM2742	Synchronous Controller	TSSOP-14		1	NSC
Q1	Si4884DY	N-MOSFET	SO-8	30V, 13.5mΩ, @ 4.5V 15.3nC	1	Vishay
Q2	Si4884DY	N-MOSFET	SO-8	30V, 13.5mΩ, @ 4.5V 15.3nC	1	Vishay
D1	BAT-54	Schottky Diode	SOT-23	30V	1	Vishay
Lin	P1166.102T	Inductor	7.29x7.29 3.51mm	1µH, 11A 3.7mΩ	1	Pulse
L1	P1168.102T	Inductor	12x12x4.5 mm	1µH, 11A, 3.7mΩ	1	Pulse
Cin1	10MV5600AX	Aluminum Electrolytic	16mm D 25mm H	5600µF 10V 2.35Arms	1	Sanyo
Cinx	C3216X7R1E105K	Capacitor	1206	1µF, 25V	1	TDK
Co1, Co2, Co3	16MV4700WX	Aluminum Electrolytic	12.5mm D 30mm H	4700µF 16V 2.8Arms	2	Sanyo
Cboot	VJ1206X104XXA	Capacitor	1206	0.1µF, 25V	1	Vishay
Cin	C3216X7R1E225K	Capacitor	1206	2.2µF, 25V	1	TDK
Css	VJ1206X123KXX	Capacitor	1206	12nF, 25V	1	Vishay
Cc1	VJ1206A4R7KXX	Capacitor	1206	4.7pF 10%	1	Vishay

Copyright © 2004–2013, Texas Instruments Incorporated

Table 5. Bill of Materials for Circuit of Figure 34 (continued)

ID	Part Number	Type	Size	Parameters	Qty.	Vendor
Cc2	VJ1206A681KXX	Capacitor	1206	680pF 10%	1	Vishay
Rin	CRCW1206100J	Resistor	1206	10Ω 5%	1	Vishay
Rfadj	CRCW12064992F	Resistor	1206	49.9kΩ 1%	1	Vishay
Rc1	CRCW12061473F	Resistor	1206	147kΩ 1%	1	Vishay
Rfb1	CRCW12061492F	Resistor	1206	14.9kΩ 1%	1	Vishay
Rfb2	CRCW12064991F	Resistor	1206	4.99kΩ 1%	1	Vishay
Rcs	CRCW1206332J	Resistor	1206	3.3kΩ 5%	1	Vishay

Table 6. Bill of Materials for Circuit of Figure 35

ID	Part Number	Type	Size	Parameters	Qty.	Vendor
U1	LM2742	Synchronous Controller	TSSOP-14		1	NSC
Q1/Q2	Si4826DY	Assymetric Dual N-MOSFET	SO-8	30V, 24mΩ/ 8nC Top 16.5mΩ/ 15nC	1	Vishay
D1	BAT-54	Schottky Diode	SOT-23	30V	1	Vishay
Lin	RLF7030T-1R0N64	Inductor	6.8x7.1x3.2mm	1µH, 6.4A, 7.3mΩ	1	TDK
L1	RLF7030T-3R3M4R1	Inductor	6.8x7.1x3.2mm	3.3µH, 4.1A, 17.4mΩ	1	TDK
Cin1	C4532X5R1E156M	MLCC	1812	15µF 25V 3.3Arms	1	Sanyo
Co1	C4532X5R1E156M	MLCC	1812	15µF 25V 3.3Arms	1	Sanyo
Cboot	VJ1206X104XXA	Capacitor	1206	0.1µF, 25V	1	TDK
Cin	C3216X7R1E225K	Capacitor	1206	2.2µF, 25V	1	TDK
Css	VJ1206X393KXX	Capacitor	1206	39nF, 25V	1	Vishay
Cc1	VJ1206A220KXX	Capacitor	1206	22pF 10%	1	Vishay
Cc2	VJ1206A681KXX	Capacitor	1206	680pF 10%	1	Vishay
Cc3	VJ1206A681KXX	Capacitor	1206	680pF 10%	1	Vishay
Rin	CRCW1206100J	Resistor	1206	10Ω 5%	1	Vishay
Rfadj	CRCW12061742F	Resistor	1206	17.4kΩ 1%	1	Vishay
Rc1	CRCW12061072F	Resistor	1206	10.7kΩ 1%	1	Vishay
Rc2	CRCW120666R5F	Resistor	1206	66.5Ω 1%	1	Vishay
Rfb1	CRCW12064991F	Resistor	1206	4.99kΩ 1%	1	Vishay
Rfb2	CRCW12061002F	Resistor	1206	10kΩ 1%	1	Vishay
Rcs	CRCW1206152J	Resistor	1206	1.5kΩ 5%	1	Vishay

Table 7. Bill of Materials for 3.3V Circuit of Figure 35 (Identical to BOM for 1.8V except as noted below)

ID	Part Number	Type	Size	Parameters	Qty.	Vendor
L1	RLF7030T-4R7M3R4	Inductor	6.8x7.1x 3.2mm	4.7µH, 3.4A, 26mΩ	1	TDK
Cc1	VJ1206A270KXX	Capacitor	1206	27pF 10%	1	Vishay
Cc2	VJ1206X102KXX	Capacitor	1206	1nF 10%	1	Vishay
Cc3	VJ1206A821KXX	Capacitor	1206	820pF 10%	1	Vishay
Rc1	CRCW12061212F	Resistor	1206	12.1kΩ 1%	1	Vishay
Rc2	CRCW12054R9F	Resistor	1206	54.9Ω 1%	1	Vishay
Rfb1	CRCW12062211F	Resistor	1206	2.21kΩ 1%	1	Vishay
Rfb2	CRCW12061002F	Resistor	1206	10kΩ 1%	1	Vishay

Copyright © 2004–2013, Texas Instruments Incorporated

Table 8. Bill of Materials for Circuit of Figure 36

ID	Part Number	Type	Size	Parameters	Qty.	Vendor
U1	LM2742	Synchronous Controller	TSSOP-14		1	NSC
U2	LM78L05	Voltage Regulator	SO-8		1	NSC
Q1/Q2	Si4826DY	Assymetric Dual N-MOSFET	SO-8	30V, 24mΩ/ 8nC Top 16.5mΩ/ 15nC	1	Vishay
D1	BAT-54	Schottky Diode	SOT-23	30V	1	Vishay
Lin	RLF7030T-1R0N64	Inductor	6.8x7.1x3.2mm	1µH, 6.4A, 7.3mΩ	1	TDK
L1	SLF12565T-4R2N5R5	Inductor	12.5x12.5x6.5mm	4.2µH, 5.5A, 15mΩ	1	TDK
Cin1	16MV680WG	Al-E	D: 10mm L: 12.5mm	680µF 16V 3.4Arms	1	Sanyo
Cinx	C3216X5R1C106M	MLCC	1210	10µF 16V 3.4Arms	1	TDK
Co1 Co2	16MV680WG	MLCC	1812	15µF 25V 3.3Arms	1	Sanyo
Cox	C3216X5R10J06M	MLCC	1206	10µF 6.3V 2.7A		TDK
Cboot	VJ1206X104XXA	Capacitor	1206	0.1µF, 25V	1	Vishay
Cin	C3216X7R1E225K	Capacitor	1206	2.2µF, 25V	1	TDK
Css	VJ1206X123KXX	Capacitor	1206	12nF, 25V	1	Vishay
Cc1	VJ1206A8R2KXX	Capacitor	1206	8.2pF 10%	1	Vishay
Cc2	VJ1206X102KXX	Capacitor	1206	1nF 10%	1	Vishay
Cc3	VJ1206X472KXX	Capacitor	1206	4.7nF 10%	1	Vishay
Rfadj	CRCW12063252F	Resistor	1206	32.5kΩ 1%	1	Vishay
Rc1	CRCW12065232F	Resistor	1206	52.3kΩ 1%	1	Vishay
Rc2	CRCW120662371F	Resistor	1206	2.37Ω 1%	1	Vishay
Rfb1	CRCW12062211F	Resistor	1206	2.21kΩ 1%	1	Vishay
Rfb2	CRCW12061002F	Resistor	1206	10kΩ 1%	1	Vishay
Rcs	CRCW1206202J	Resistor	1206	2kΩ 5%	1	Vishay

Table 9. Bill of Materials for Circuit of Figure 37

ID	Part Number	Type	Size	Parameters	Qty.	Vendor
U1	LM2742	Synchronous Controller	TSSOP-14		1	NSC
Q1	Si4894DY	N-MOSFET	SO-8	30V, 15mΩ, 11.5nC	1	Vishay
D2	MBRS330T3	Schottky Diode	SO-8	30V, 3A	1	ON
L1	SLF12565T-470M2R4	Inductor	12.5x12.8x 4.7mm	47µH, 2.7A 53mΩ	1	TDK
D1	MBR0520	Schottky Diode	1812	20V 0.5A	1	ON
Cin1	16MV680WG	Al-E	1206	680µF, 16V, 1.54Arms	1	Sanyo
Cinx	C3216X5R1C106M	MLCC	1206	10µF, 16V, 3.4Arms	1	TDK
Co1, Co2	16MV680WG	Al-E	D: 10mm L: 12.5mm	680µF 16V 26mΩ	2	Sanyo
Cox	C3216X5R10J06M	MLCC	1206	10µF, 6.3V 2.7A	1	TDK
Cboot	VJ1206X104XXA	Capacitor	1206	0.1µF, 25V	1	Vishay
Cin	C3216X7R1E225K	Capacitor	1206	2.2µF, 25V	1	TDK
Css	VJ1206X123KXX	Capacitor	1206	12nF, 25V	1	Vishay
Cc1	VJ1206A561KXX	Capacitor	1206	56pF 10%	1	Vishay
Cc2	VJ1206X392KXX	Capacitor	1206	3.9nF 10%	1	Vishay
Cc3	VJ1206X223KXX	Capacitor	1206	22nF 10%	1	Vishay
Rfadj	CRCW12062673F	Resistor	1206	267kΩ 1%	1	Vishay
Rc1	CRCW12066192F	Resistor	1206	61.9kΩ 1%	1	Vishay
Rc2	CRCW12067503F	Resistor	1206	750kΩ 1%	1	Vishay
Rfb1	CRCW12061371F	Resistor	1206	1.37kΩ 1%	1	Vishay
Rfb2	CRCW12061002F	Resistor	1206	10kΩ 1%	1	Vishay
Rcs	CRCW1206122F	Resistor	1206	1.2kΩ 5%	1	Vishay

Copyright © 2004–2013, Texas Instruments Incorporated

REVISION HISTORY

Changes from Revision B (March 2013) to Revision C	Page
• Changed layout of National Data Sheet to TI format	25

Copyright © 2004–2013, Texas Instruments Incorporated

PACKAGING INFORMATION

Orderable part number	Status (1)	Material type (2)	Package | Pins	Package qty | Carrier	RoHS (3)	Lead finish/ Ball material (4)	MSL rating/ Peak reflow (5)	Op temp (°C)	Part marking (6)
LM2742MTC/NOPB	Active	Production	TSSOP (PW) | 14	94 | TUBE	Yes	NIPDAU | SN	Level-1-260C-UNLIM	-40 to 125	2742 MTC
LM2742MTC/NOPB.B	Active	Production	TSSOP (PW) | 14	94 | TUBE	Yes	NIPDAU	Level-1-260C-UNLIM	-40 to 125	2742 MTC
LM2742MTCX/NOPB	Active	Production	TSSOP (PW) | 14	2500 | LARGE T&R	Yes	NIPDAU | SN	Level-1-260C-UNLIM	-40 to 125	2742 MTC
LM2742MTCX/NOPB.A	Active	Production	TSSOP (PW) | 14	2500 | LARGE T&R	Yes	NIPDAU	Level-1-260C-UNLIM	-40 to 125	2742 MTC
LM2742MTCX/NOPB.B	Active	Production	TSSOP (PW) | 14	2500 | LARGE T&R	Yes	NIPDAU	Level-1-260C-UNLIM	-40 to 125	2742 MTC

(1) **Status:** For more details on status, see our product life cycle.

(2) **Material type:** When designated, preproduction parts are prototypes/experimental devices, and are not yet approved or released for full production. Testing and final process, including without limitation quality assurance, reliability performance testing, and/or process qualification, may not yet be complete, and this item is subject to further changes or possible discontinuation. If available for ordering, purchases will be subject to an additional waiver at checkout, and are intended for early internal evaluation purposes only. These items are sold without warranties of any kind.

(3) **RoHS values:** Yes, No, RoHS Exempt. See the TI RoHS Statement for additional information and value definition.

(4) **Lead finish/Ball material:** Parts may have multiple material finish options. Finish options are separated by a vertical ruled line. Lead finish/Ball material values may wrap to two lines if the finish value exceeds the maximum column width.

(5) **MSL rating/Peak reflow:** The moisture sensitivity level ratings and peak solder (reflow) temperatures. In the event that a part has multiple moisture sensitivity ratings, only the lowest level per JEDEC standards is shown. Refer to the shipping label for the actual reflow temperature that will be used to mount the part to the printed circuit board.

(6) **Part marking:** There may be an additional marking, which relates to the logo, the lot trace code information, or the environmental category of the part.

Multiple part markings will be inside parentheses. Only one part marking contained in parentheses and separated by a "~" will appear on a part. If a line is indented then it is a continuation of the previous line and the two combined represent the entire part marking for that device.

Important Information and Disclaimer: The information provided on this page represents TI's knowledge and belief as of the date that it is provided. TI bases its knowledge and belief on information provided by third parties, and makes no representation or warranty as to the accuracy of such information. Efforts are underway to better integrate information from third parties. TI has taken and continues to take reasonable steps to provide representative and accurate information but may not have conducted destructive testing or chemical analysis on incoming materials and chemicals. TI and TI suppliers consider certain information to be proprietary, and thus CAS numbers and other limited information may not be available for release.

In no event shall TI's liability arising out of such information exceed the total purchase price of the TI part(s) at issue in this document sold by TI to Customer on an annual basis.

TAPE AND REEL INFORMATION

REEL DIMENSIONS

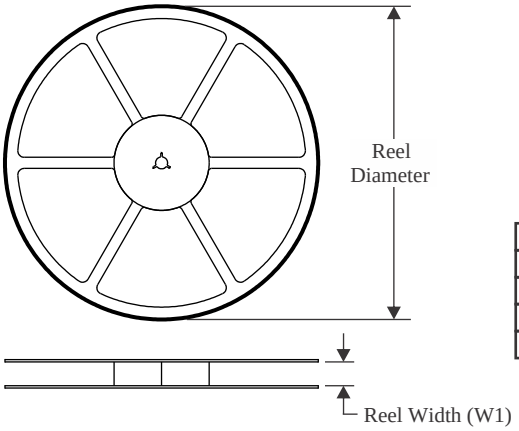

TAPE DIMENSIONS

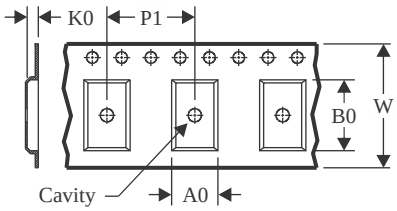

A0	Dimension designed to accommodate the component width
B0	Dimension designed to accommodate the component length
K0	Dimension designed to accommodate the component thickness
W	Overall width of the carrier tape
P1	Pitch between successive cavity centers

QUADRANT ASSIGNMENTS FOR PIN 1 ORIENTATION IN TAPE

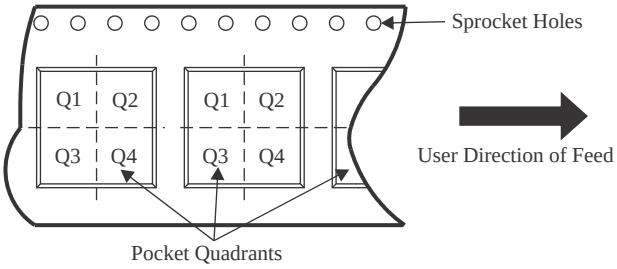

*All dimensions are nominal

Device	Package Type	Package Drawing	Pins	SPQ	Reel Diameter (mm)	Reel Width W1 (mm)	A0 (mm)	B0 (mm)	K0 (mm)	P1 (mm)	W (mm)	Pin1 Quadrant
LM2742MTCX/NOPB	TSSOP	PW	14	2500	330.0	12.4	6.95	5.6	1.6	8.0	12.0	Q1

TAPE AND REEL BOX DIMENSIONS

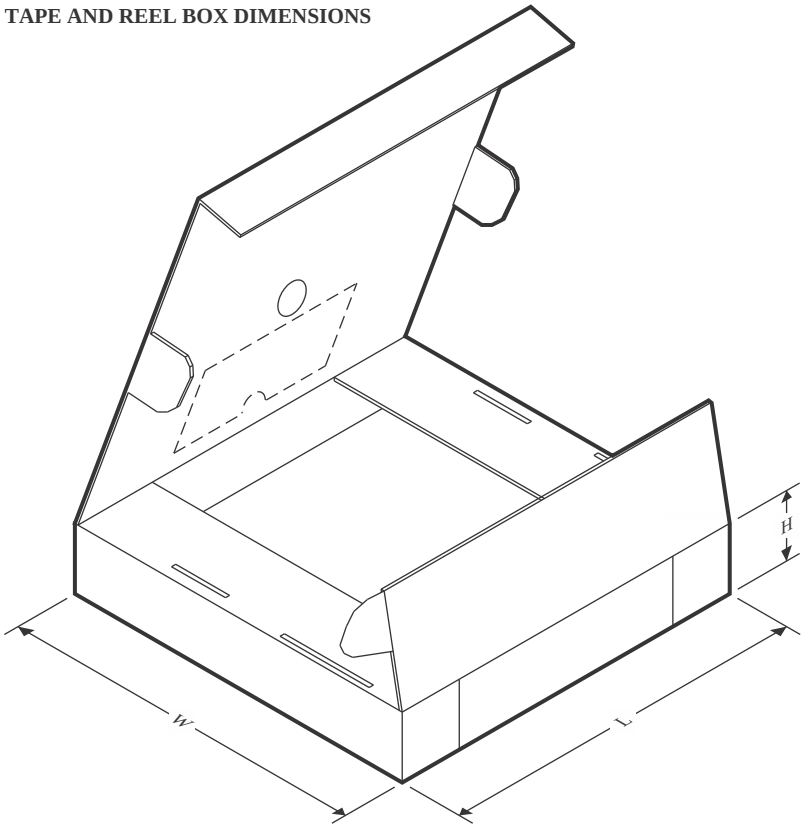

*All dimensions are nominal

Device	Package Type	Package Drawing	Pins	SPQ	Length (mm)	Width (mm)	Height (mm)
LM2742MTCX/NOPB	TSSOP	PW	14	2500	367.0	367.0	35.0

TUBE

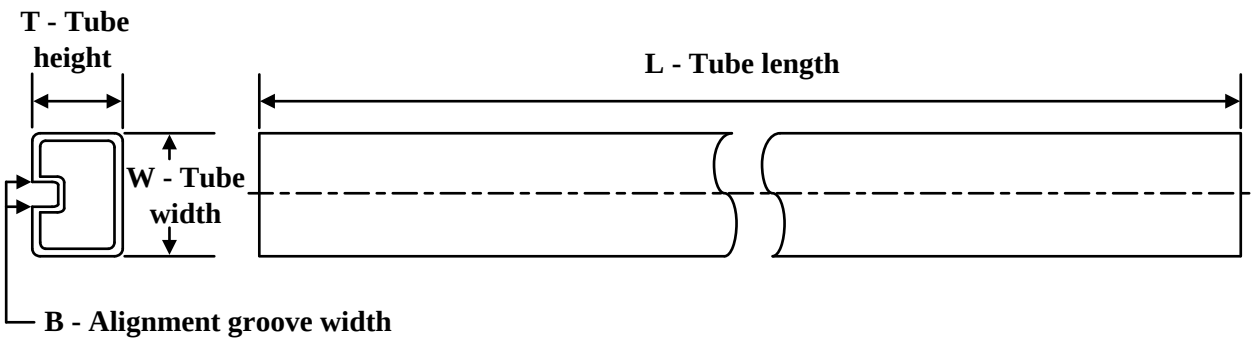

*All dimensions are nominal

Device	Package Name	Package Type	Pins	SPQ	L (mm)	W (mm)	T (µm)	B (mm)
LM2742MTC/NOPB	PW	TSSOP	14	94	495	8	2514.6	4.06
LM2742MTC/NOPB	PW	TSSOP	14	94	530	10.2	3600	3.5
LM2742MTC/NOPB.B	PW	TSSOP	14	94	530	10.2	3600	3.5
LM2742MTC/NOPB.B	PW	TSSOP	14	94	495	8	2514.6	4.06

PW0014A

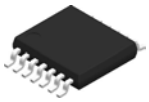

PACKAGE OUTLINE

TSSOP - 1.2 mm max height

SMALL OUTLINE PACKAGE

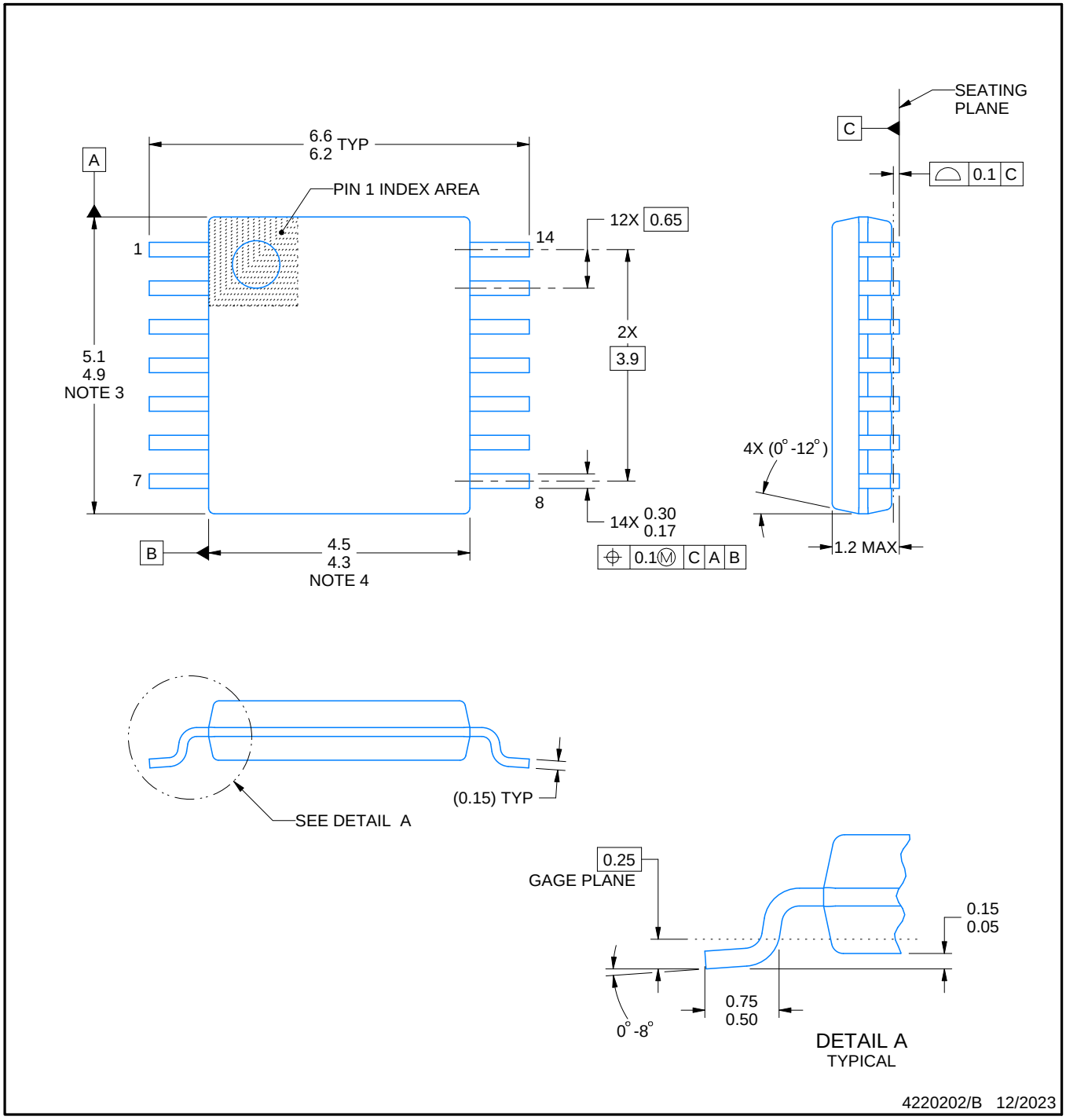

NOTES:

1. All linear dimensions are in millimeters. Any dimensions in parenthesis are for reference only. Dimensioning and tolerancing per ASME Y14.5M.
2. This drawing is subject to change without notice.
3. This dimension does not include mold flash, protrusions, or gate burrs. Mold flash, protrusions, or gate burrs shall not exceed 0.15 mm per side.
4. This dimension does not include interlead flash. Interlead flash shall not exceed 0.25 mm per side.
5. Reference JEDEC registration MO-153.

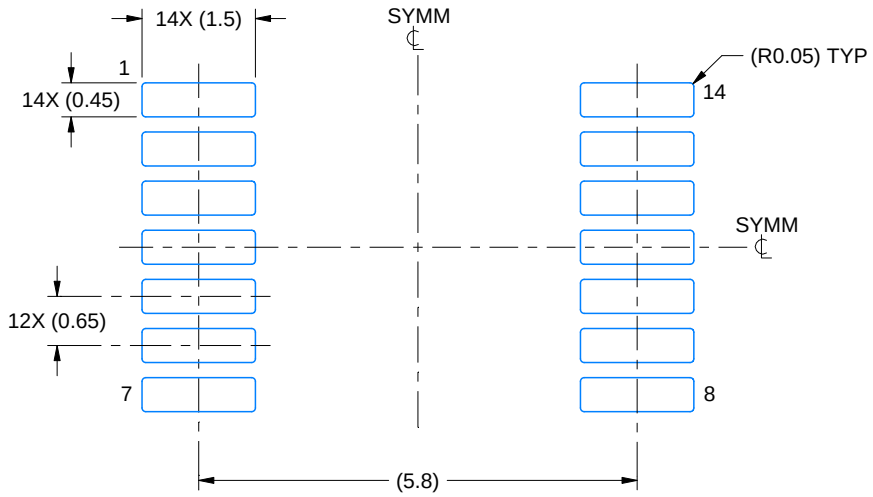

LAND PATTERN EXAMPLE
EXPOSED METAL SHOWN
SCALE: 10X

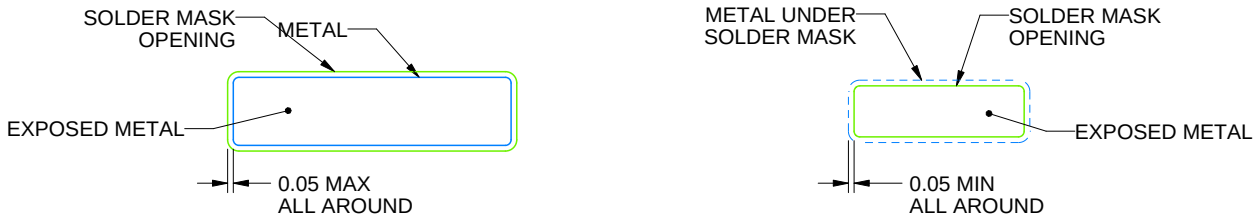

NON-SOLDER MASK DEFINED (PREFERRED)

SOLDER MASK DEFINED

SOLDER MASK DETAILS

4220202/B 12/2023

NOTES: (continued)

6. Publication IPC-7351 may have alternate designs.
7. Solder mask tolerances between and around signal pads can vary based on board fabrication site.

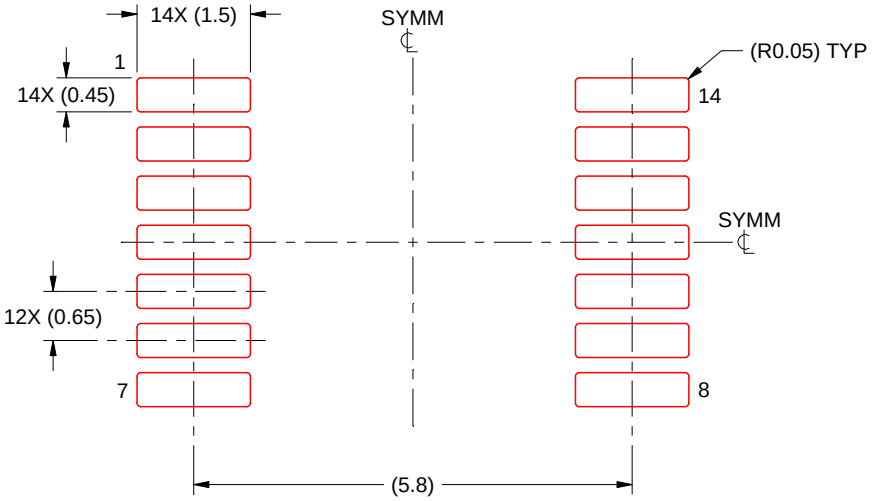

SOLDER PASTE EXAMPLE
BASED ON 0.125 mm THICK STENCIL
SCALE: 10X

4220202/B 12/2023

NOTES: (continued)

8. Laser cutting apertures with trapezoidal walls and rounded corners may offer better paste release. IPC-7525 may have alternate design recommendations.
9. Board assembly site may have different recommendations for stencil design.

IMPORTANT NOTICE AND DISCLAIMER

TI PROVIDES TECHNICAL AND RELIABILITY DATA (INCLUDING DATA SHEETS), DESIGN RESOURCES (INCLUDING REFERENCE DESIGNS), APPLICATION OR OTHER DESIGN ADVICE, WEB TOOLS, SAFETY INFORMATION, AND OTHER RESOURCES “AS IS” AND WITH ALL FAULTS, AND DISCLAIMS ALL WARRANTIES, EXPRESS AND IMPLIED, INCLUDING WITHOUT LIMITATION ANY IMPLIED WARRANTIES OF MERCHANTABILITY, FITNESS FOR A PARTICULAR PURPOSE OR NON-INFRINGEMENT OF THIRD PARTY INTELLECTUAL PROPERTY RIGHTS.

These resources are intended for skilled developers designing with TI products. You are solely responsible for (1) selecting the appropriate TI products for your application, (2) designing, validating and testing your application, and (3) ensuring your application meets applicable standards, and any other safety, security, regulatory or other requirements.

These resources are subject to change without notice. TI grants you permission to use these resources only for development of an application that uses the TI products described in the resource. Other reproduction and display of these resources is prohibited. No license is granted to any other TI intellectual property right or to any third party intellectual property right. TI disclaims responsibility for, and you will fully indemnify TI and its representatives against, any claims, damages, costs, losses, and liabilities arising out of your use of these resources.

TI’s products are provided subject to TI’s Terms of Sale or other applicable terms available either on ti.com or provided in conjunction with such TI products. TI’s provision of these resources does not expand or otherwise alter TI’s applicable warranties or warranty disclaimers for TI products.

TI objects to and rejects any additional or different terms you may have proposed.

Mailing Address: Texas Instruments, Post Office Box 655303, Dallas, Texas 75265
Copyright © 2025, Texas Instruments Incorporated