ISO7710-Q1 High Speed, Robust EMC Reinforced Single-Channel Digital Isolator

1 Features

- Qualified for automotive applications
- AEC-Q100 Qualified with the following results:
  - Device temperature grade 1: –40°C to 125°C ambient operating temperature range
  - Device HBM ESD classification level 3A
  - Device CDM ESD classification level C6
- Functional Safety-Capable
  - Documentation available to aid functional safety system design
- 100Mbps data rate
- Robust isolation barrier:
  - >30-year projected lifetime at $1500V_{RMS}$ working voltage
  - Up to $5000V_{RMS}$ isolation rating
  - Up to 12.8kV surge capability
  - ±100kV/µs typical CMTI
- Wide supply range: 2.25V to 5.5V
- 2.25V to 5.5V Level translation
- Default output *high* (ISO7710) and *low* (ISO7710F) options
- Low power consumption, typical 1.7mA at 1Mbps
- Low propagation delay: 11ns Typical (5V Supplies)
- Robust electromagnetic compatibility (EMC)
  - System-level ESD, EFT, and surge immunity
  - ±8kV IEC 61000-4-2 contact discharge protection across isolation barrier
  - Low emissions
- Wide-SOIC (DW-16) and narrow-SOIC (D-8) package options
- Safety-related Certifications
  - VDE reinforced insulation per DIN EN IEC 60747-17 (VDE 0884-17)
  - UL 1577 component recognition program
  - IEC 62368-1, IEC 61010-1, IEC 60601-1 and GB 4943.1 certifications

2 Applications

- Hybrid, electric and power train system (EV/HEV)
  - Battery management system (BMS)
  - On-board charger
  - Traction inverter
  - DC/DC converter
  - Inverter and motor control

3 Description

The ISO7710-Q1 device is a high-performance, single-channel digital isolator with $5000V_{RMS}$ (DW package) and $3000V_{RMS}$ (D package) isolation ratings per UL 1577. This device is also certified by VDE, TUV, CSA, and CQC.

The ISO7710-Q1 device provides high electromagnetic immunity and low emissions at low power consumption, while isolating CMOS or LVCMOS digital I/Os. The isolation channel has a logic input and output buffer separated by a double capacitive silicon dioxide (SiO_2) insulation barrier. In the event of input power or signal loss, default output is *high* for a device without suffix F and *low* for a device with suffix F. See the *Device Functional Modes* section for further details.

Used in conjunction with isolated power supplies, the device helps prevent noise currents on data buses, such as CAN and LIN, or other circuits from entering the local ground and interfering with or damaging sensitive circuitry. Through ingenious chip design and layout techniques, the electromagnetic compatibility of the ISO7710-Q1 device has been significantly enhanced to ease system-level ESD, EFT, surge, and emissions compliance. The ISO7710-Q1 device is available in 16-pin SOIC wide-body (DW) and 8-pin SOIC narrow-body (D) packages.

Package Information

PART NUMBER	PACKAGE(1)	PACKAGE SIZE(2)	BODY SIZE (NOM)
ISO7710-Q1	SOIC (D, 16)	4.90mm × 6mm	4.90mm × 3.91mm
	SOIC (DW, 16)	10.30mm × 10.30mm	10.30mm × 7.50mm

(1) For more information, see Section 28.
(2) The package size (length × width) is a nominal value and includes pins, where applicable.

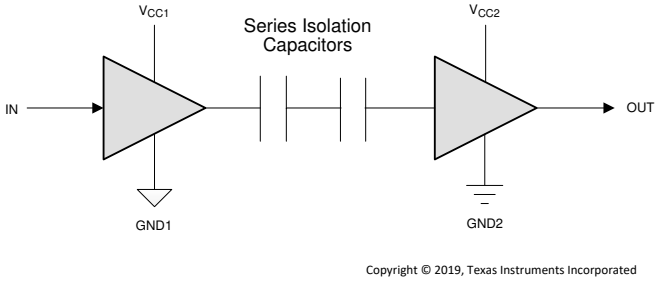

Simplified Schematic

An IMPORTANT NOTICE at the end of this data sheet addresses availability, warranty, changes, use in safety-critical applications, intellectual property matters and other important disclaimers. PRODUCTION DATA.

Table of Contents

1 Features....1
2 Applications....1
3 Description....1
4 Pin Configuration and Functions....3
5 Specifications....4
6 Absolute Maximum Ratings....5
7 ESD Ratings....5
8 Recommended Operating Conditions....6
9 Thermal Information....7
10 Power Ratings....7
11 Insulation Specifications....8
12 Safety-Related Certifications....9
13 Safety Limiting Values....10
14 Electrical Characteristics—5-V Supply....11
15 Supply Current Characteristics—5-V Supply....11
16 Electrical Characteristics—3.3-V Supply....12
17 Supply Current Characteristics—3.3-V Supply....12
18 Electrical Characteristics—2.5-V Supply....13
19 Supply Current Characteristics—2.5-V Supply....13
20 Switching Characteristics—5-V Supply....14
21 Switching Characteristics—3.3-V Supply....14
22 Switching Characteristics—2.5-V Supply....15
23 Parameter Measurement Information....16
24 Detailed Description....17
24.1 Overview....17
24.2 Functional Block Diagram....17
24.3 Feature Description....18
24.4 Device Functional Modes....19
25 Application and Implementation....20
25.1 Application Information....20
25.2 Typical Application....20
25.3 Power Supply Recommendations....22
25.4 Layout....23
26 Device and Documentation Support....24
26.1 Documentation Support....24
26.2 Related Links....24
26.3 Receiving Notification of Documentation Updates....24
26.4 Support Resources....24
26.5 Trademarks....24
26.6 Electrostatic Discharge Caution....24
26.7 Glossary....24
27 Revision History....25
28 Mechanical, Packaging, and Orderable Information....26

Copyright © 2024 Texas Instruments Incorporated

4 Pin Configuration and Functions

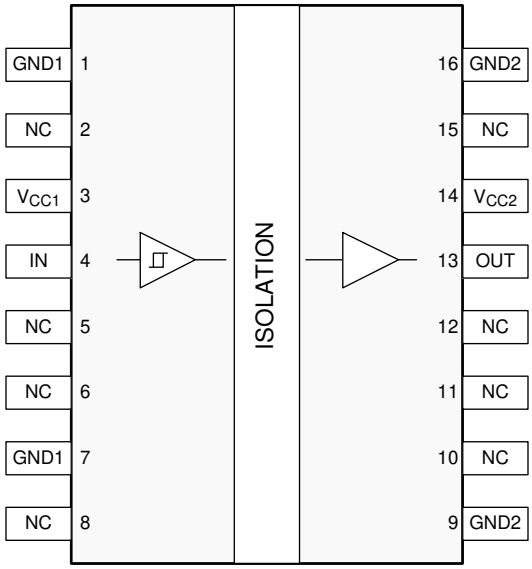

Figure 4-1. DW Package 16-Pin SOIC Top View

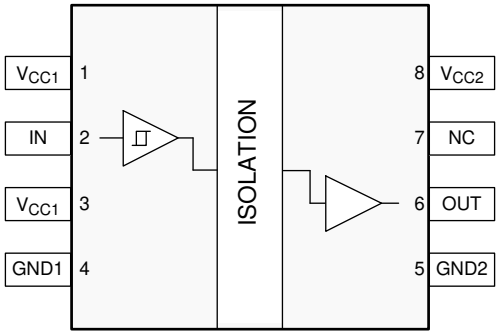

Figure 4-2. D Package 8-Pin SOIC Top View

Table 4-1. Pin Functions

PIN			Type	DESCRIPTION
NAME	NO.			
	DW	D		
V_{CC1}	3	1, 3	—	Power supply, V_{CC1}
V_{CC2}	14	8	—	Power supply, V_{CC2}
GND1	1, 7	4	—	Ground connection for V_{CC1}
GND2	9, 16	5	—	Ground connection for V_{CC2}
IN	4	2	I	Input channel
OUT	13	6	O	Output channel
NC	2, 5, 6, 8, 10, 11, 12, 15	7	—	No connect pin; no internal connection

Copyright © 2024 Texas Instruments Incorporated

5 Specifications

Copyright © 2024 Texas Instruments Incorporated

6 Absolute Maximum Ratings

See[1]

		MIN	MAX	UNIT
V_{CC1}, V_{CC2}	Supply Voltage [2]	-0.5	6	V
V	Voltage at INx, OUTx	-0.5	V_{CCX} + 0.5 [3]	V
I_O	Output current	-15	15	mA
T_J	Junction temperature		150	°C
T_{stg}	Storage temperature	-65	150	°C

(1) Operation outside the Absolute Maximum Ratings may cause permanent device damage. Absolute Maximum Ratings do not imply functional operation of the device at these or any other conditions beyond those listed under Recommended Operating Conditions. If used outside the Recommended Operating Conditions but within the Absolute Maximum Ratings, the device may not be fully functional, and this may affect device reliability, functionality, performance, and shorten the device lifetime.
(2) All voltage values except differential I/O bus voltages are with respect to the local ground terminal (GND1 or GND2) and are peak voltage values
(3) Maximum voltage must not exceed 6 V.

7 ESD Ratings

			VALUE	UNIT
V_{ESD}	Electrostatic discharge	Human body model (HBM), per AEC Q100-002 [1]	±6000	V
		Charged device model (CDM),per AEC Q100-011	±1500	
		Contact discharge per IEC 61000-4-2; Isolation barrier withstand test[2] [3]	±8000	

(1) AEC Q100-002 indicates that HBM stressing shall be in accordance with the ANSI/ESDA/JEDEC JS-001 specification.
(2) IEC ESD strike is applied across the barrier with all pins on each side tied together creating a two-terminal device.
(3) Testing is carried out in air or oil to determine the intrinsic contact discharge capability of the device.

Copyright © 2024 Texas Instruments Incorporated

8 Recommended Operating Conditions

			MIN	NOM	MAX	UNIT
V_{CC1}, V_{CC2}	Supply voltage		2.25		5.5	V
$V_{CC(UVLO+)}$	UVLO threshold when supply voltage is rising			2	2.25	V
$V_{CC(UVLO-)}$	UVLO threshold when supply voltage is falling		1.7	1.8		V
$V_{HYS(UVLO)}$	Supply voltage UVLO hysteresis		100	200		mV
I_{OH}	High level output current	V_{CC2} = 5 V	-4			mA
		V_{CC2} = 3.3 V	-2			
		V_{CC2} = 2.5 V	-1			
I_{OL}	Low level output current	V_{CC2} = 5 V			4	mA
		V_{CC2} = 3.3 V			2	
		V_{CC2} = 2.5 V			1	
V_{IH}	High level Input voltage		0.7 x V_{CC1}		V_{CC1}	V
V_{IL}	Low level Input voltage		0		0.3 x V_{CC1}	V
DR(1)	Data Rate		0		100	Mbps
T_A	Ambient temperature		-55	25	125	°C

(1) 100 Mbps is the maximum specified data rate, although higher data rates are possible.

Copyright © 2024 Texas Instruments Incorporated

9 Thermal Information

THERMAL METRIC [1]		ISO7710-Q1		UNIT
		DW (SOIC) (16-Pin)	D(SOIC) (8-Pin)	
$R_{\theta JA}$	Junction-to-ambient thermal resistance	94.4	146.1	°C/W
$R_{\theta JC(top)}$	Junction-to-case (top) thermal resistance	57.3	63.1	°C/W
$R_{\theta JB}$	Junction-to-board thermal resistance	57.1	80.0	°C/W
ψ_{JT}	Junction-to-top characterization parameter	40.0	9.6	°C/W
ψ_{JB}	Junction-to-board characterization parameter	56.8	79.0	°C/W
$R_{\theta JC(bot)}$	Junction-to-case (bottom) thermal resistance	—	—	°C/W

(1) For more information about traditional and new thermal metrics, see the Semiconductor and IC Package Thermal Metrics application note

10 Power Ratings

PARAMETER		TEST CONDITIONS	MIN	TYP	MAX	UNIT
ISO7710-Q1						
P_D	Maximum power dissipation (both sides)	$V_{CC1} = V_{CC2} = 5.5$ V, $T_J = 150$°C, $C_L = 15$ pF, Input a 50-MHz 50% duty cycle square wave			55	mW
P_{D1}	Maximum power dissipation (side-1)				13	mW
P_{D2}	Maximum power dissipation (side-2)				42	mW

11 Insulation Specifications

PARAMETER		TEST CONDITIONS	VALUE		UNIT
			DW-16	D-8	
IEC 60664-1					
CLR	External clearance[1]	Shortest terminal-to-terminal distance through air	8	4	mm
CPG	External creepage[1]	Shortest terminal-to-terminal distance across the package surface	8	4	mm
DTI	Distance through the insulation	Minimum internal gap (internal clearance)	17	17	µm
CTI	Comparative tracking index	DIN EN 60112 (VDE 0303-11); IEC 60112; UL 746A	>600	>600	V
	Material Group	According to IEC 60664-1	I	I	
	Overvoltage category per IEC 60664-1	Rated mains voltage ≤ 150 V_{RMS}	I–IV	I-IV	
		Rated mains voltage ≤ 300 V_{RMS}	I–IV	I-III	
		Rated mains voltage ≤ 600 V_{RMS}	I–IV	n/a	
		Rated mains voltage ≤ 1000 V_{RMS}	I-III	n/a	
DIN EN IEC 60747-17 (VDE 0884-17)[2]					
V_{IORM}	Maximum repetitive peak isolation voltage	AC voltage (bipolar)	2121	637	V_{PK}
V_{IOWM}	Maximum working isolation voltage	AC voltage; time-dependent dielectric breakdown (TDDB) test, see Section 25.2.3.1	1500	450	V_{RMS}
		DC voltage	2121	637	V_{DC}
V_{IOTM}	Maximum transient isolation voltage	$V_{TEST} = V_{IOTM}$, t = 60 s (qualification); $V_{TEST} = 1.2 \times V_{IOTM}$, t = 1 s (100% production)	8000	4242	V_{PK}
V_{IMP}	Maximum impulse voltage[3]	Tested in air, 1.2/50-µs waveform per IEC 62368-1	8000	5000	V_{PK}
V_{IOSM}	Maximum surge isolation voltage[4]	$V_{IOSM} \geq 1.3 \times V_{IMP}$; Tested in oil (qualification test), 1.2/50-µs waveform per IEC 62368-1	12800	10000	V_{PK}
q_{pd}	Apparent charge[5]	Method a: After I/O safety test subgroup 2/3, $V_{ini} = V_{IOTM}$, t_{ini} = 60 s; $V_{pd(m)} = 1.2 \times V_{IORM}$, t_m = 10 s	≤ 5	≤ 5	pC
		Method a: After environmental tests subgroup 1, $V_{ini} = V_{IOTM}$, t_{ini} = 60 s; $V_{pd(m)} = 1.6 \times V_{IORM}$, t_m = 10 s	≤ 5	≤ 5	
		Method b: At routine test (100% production) and preconditioning (type test); $V_{ini} = 1.2 \times V_{IOTM}$, t_{ini} = 1 s; $V_{pd(m)} = 1.875 \times V_{IORM}$ (ISO7710), t_m = 1 s (method b1) or $V_{pd(m)} = V_{ini}$, $t_m = t_{ini}$ (method b2)	≤ 5	≤ 5	
C_{IO}	Barrier capacitance, input to output[6]	$V_{IO} = 0.4 \times \sin(2\pi ft)$, f = 1 MHz	≅0.4	≅0.4	pF
R_{IO}	Insulation resistance[6]	V_{IO} = 500 V, T_A = 25°C	> 10^{12}	> 10^{12}	Ω
		V_{IO} = 500 V, 100°C ≤ T_A ≤ 125°C	> 10^{11}	> 10^{11}	
		V_{IO} = 500 V at T_S = 150°C	> 10^9	> 10^9	
	Pollution degree		2	2	
	Climatic category		55/125/21	55/125/21	
UL 1577					
V_{ISO}	Withstand isolation voltage	$V_{TEST} = V_{ISO}$, t = 60 s (qualification); $V_{TEST} = 1.2 \times V_{ISO}$, t = 1 s (100% production)	5000	3000	V_{RMS}

(1) Creepage and clearance requirements should be applied according to the specific equipment isolation standards of an application. Care must be taken to maintain the creepage and clearance distance of a board design to verify that the mounting pads of the isolator on the printed-circuit board do not reduce this distance. Creepage and clearance on a printed-circuit board become equal in certain cases. Techniques such as inserting grooves, ribs, or both on a printed circuit board are used to help increase these specifications.
(2) This coupler is designed for *safe electrical insulation* only within the safety ratings. Compliance with the safety ratings shall be ensured by means of suitable protective circuits.
(3) Testing is carried out in air to determine the surge immunity of the package

Copyright © 2024 Texas Instruments Incorporated

(4) Testing is carried out in oil to determine the intrinsic surge immunity of the isolation barrier.
(5) Apparent charge is electrical discharge caused by a partial discharge (pd).
(6) All pins on each side of the barrier tied together creating a two-terminal device.

12 Safety-Related Certifications

VDE	CSA	UL	CQC	TUV
Certified according to DIN EN IEC 60747-17 (VDE 0884-17)	Certified according to IEC 62368-1 and IEC 60601-1	Certified according to UL 1577 Component Recognition Program	Certified according to GB4943.1	Certified according to EN 61010-1 and EN 62368-1
Maximum transient isolation voltage, 8000 V_{PK} (DW-16, Reinforced) and 4242 V_{PK} (D-8); Maximum repetitive peak isolation voltage, 2121 V_{PK} (DW-16, Reinforced) and 637 V_{PK} (D-8); Maximum surge isolation voltage, 12800 V_{PK} (DW-16, Reinforced) and 10000 V_{PK} (D-8)	Reinforced insulation per CSA 62368-1 and IEC 62368-1, 800 V_{RMS} (DW-16) and 400 V_{RMS} (D-8) max working voltage (pollution degree 2, material group I); 2 MOPP (Means of Patient Protection) per CSA 60601-1 and IEC 60601-1, 250 V_{RMS} (DW-16) max working voltage	DW-16: Single protection, 5000 V_{RMS}; D-8: Single protection, 3000 V_{RMS}	DW-16: Reinforced Insulation, Altitude ≤ 5000 m, Tropical Climate, 700 V_{RMS} maximum working voltage; D-8: Basic Insulation, Altitude ≤ 5000 m, Tropical Climate, 400 V_{RMS} maximum working voltage	5000 V_{RMS} (DW-16) and 3000 V_{RMS} (D-8) Reinforced insulation per EN 61010-1 up to working voltage of 600 V_{RMS} (DW-16) and 300 V_{RMS} (D-8) 5000 V_{RMS} (DW-16) and 3000 V_{RMS} (D-8) Reinforced insulation per EN 62368-1 up to working voltage of 800 V_{RMS} (DW-16) and 400 V_{RMS} (D-8)
Certificate number: 40040142	Master contract number: 220991	File number: E181974	Certificate numbers: CQC21001304083 (DW-16) CQC15001121656 (D-8)	Client ID number: 77311

13 Safety Limiting Values

Safety limiting[(1)] intends to minimize potential damage to the isolation barrier upon failure of input or output circuitry. A failure of the I/O can allow low resistance to ground or the supply and, without current limiting, dissipate sufficient power to overheat the die and damage the isolation barrier potentially leading to secondary system failures.

PARAMETER		TEST CONDITIONS	MIN	TYP	MAX	UNIT
DW-16 PACKAGE						
I_S	Safety input, output, or supply current	$R_{\theta JA}$ =94.4°C/W, V_I = 5.5 V, T_J = 150°C, T_A = 25°C			241	mA
		$R_{\theta JA}$ = 94.4°C/W, V_I = 3.6 V, T_J = 150°C, T_A = 25°C			368	
		$R_{\theta JA}$ = 94.4°C/W, V_I = 2.75 V, T_J = 150°C, T_A = 25°C			482	
P_S	Safety input, output, or total power	$R_{\theta JA}$ = 94.4°C/W, T_J = 150°C, T_A = 25°C			1324	mW
T_S	Maximum safety temperature				150	°C
D-8 PACKAGE						
I_S	Safety input, output, or supply current [(1)]	$R_{\theta JA}$ =146.1°C/W, V_I = 5.5 V, T_J = 150°C, T_A = 25°C			156	mA
		$R_{\theta JA}$ = 146.1°C/W, V_I = 3.6 V, T_J = 150°C, T_A = 25°C			238	
		$R_{\theta JA}$ = 146.1°C/W, V_I = 2.75 V, T_J = 150°C, T_A = 25°C			311	
P_S	Safety input, output, or total power [(1)]	$R_{\theta JA}$ = 146.1°C/W, T_J = 150°C, T_A = 25°C			856	mW
T_S	Maximum safety temperature [(1)]				150	°C

(1) The maximum safety temperature, T_S, has the same value as the maximum junction temperature, T_J, specified for the device. The I_S and P_S parameters represent the safety current and safety power respectively. The maximum limits of I_S and P_S should not be exceeded. These limits vary with the ambient temperature, T_A.
The junction-to-air thermal resistance, $R_{\theta JA}$, in the Section 9 table is that of a device installed on a high-K test board for leaded surface-mount packages. Use these equations to calculate the value for each parameter:
$T_J = T_A + R_{\theta JA} \times P$, where P is the power dissipated in the device.
$T_{J(max)} = T_S = T_A + R_{\theta JA} \times P_S$, where $T_{J(max)}$ is the maximum allowed junction temperature.
$P_S = I_S \times V_I$, where V_I is the maximum input voltage.

Copyright © 2024 Texas Instruments Incorporated

14 Electrical Characteristics—5-V Supply

V_{CC1} = V_{CC2} = 5 V ± 10% (over recommended operating conditions unless otherwise noted)

PARAMETER		TEST CONDITIONS	MIN	TYP	MAX	UNIT
V_{OH}	High-level output voltage	I_{OH} = -4 mA; see Figure 23-1	V_{CC2} - 0.4	4.8		V
V_{OL}	Low-level output voltage	I_{OL} = 4 mA; see Figure 23-1		0.2	0.4	V
$V_{IT+(IN)}$	Rising input threshold voltage			0.6 x V_{CC1}	0.7 x V_{CC1}	V
$V_{IT-(IN)}$	Falling input threshold voltage		0.3 x V_{CC1}	0.4 x V_{CC1}		V
$V_{I(HYS)}$	Input threshold voltage hysteresis		0.1 x V_{CC1}	0.2 x V_{CC1}		V
I_{IH}	High-level input current	V_{IH} = V_{CC1} at INx			10	µA
I_{IL}	Low-level input current	V_{IL} = 0 V at INx	-10			µA
CMTI	Common mode transient immunity	V_I = V_{CC1} or 0 V, V_{CM} = 1200 V; see Figure 23-3	85	100		kV/µs
C_I	Input Capacitance (1)	V_I = V_{CC}/ 2 + 0.4×sin(2πft), f = 1 MHz, V_{CC} = 5 V;		2		pF

(1) Measured from input pin to same side ground.

15 Supply Current Characteristics—5-V Supply

V_{CC1} = V_{CC2} = 5 V ± 10% (over recommended operating conditions unless otherwise noted)

PARAMETER	TEST CONDITIONS		SUPPLY CURRENT	MIN	TYP	MAX	UNIT
ISO7710-Q1							
Supply current - DC signal	V_I = V_{CC1}(ISO7710-Q1), V_I = 0 V (ISO7710-Q1 with F suffix)		I_{CC1}		0.5	1.2	mA
			I_{CC2}		0.6	1.2	
	V_I = 0V (ISO7710-Q1), V_I = V_{CC1} (ISO7710-Q1 with F suffix)		I_{CC1}		1.6	2.4	
			I_{CC2}		0.6	1.2	
Supply current - AC signal	All channels switching with square wave clock input; C_L = 15 pF	1 Mbps	I_{CC1}		1.1	1.8	
			I_{CC2}		0.6	1.3	
		10 Mbps	I_{CC1}		1.1	1.9	
			I_{CC2}		1.1	1.9	
		100 Mbps	I_{CC1}		1.4	2.3	
			I_{CC2}		5.9	7.4	

Copyright © 2024 Texas Instruments Incorporated

16 Electrical Characteristics—3.3-V Supply

V_{CC1} = V_{CC2} = 3.3 V ± 10% (over recommended operating conditions unless otherwise noted)

PARAMETER		TEST CONDITIONS	MIN	TYP	MAX	UNIT
V_{OH}	High-level output voltage	I_{OH} = -2mA; see Figure 23-1	V_{CC2} - 0.3	3.2		V
V_{OL}	Low-level output voltage	I_{OL} = 2mA; see Figure 23-1		0.1	0.3	V
$V_{IT+(IN)}$	Rising input threshold voltage			0.6 x V_{CC1}	0.7 x V_{CC1}	V
$V_{IT-(IN)}$	Falling input threshold voltage		0.3 x V_{CC1}	0.4 x V_{CC1}		V
$V_{I(HYS)}$	Input threshold voltage hysteresis		0.1 x V_{CC1}	0.2 x V_{CC1}		V
I_{IH}	High-level input current	V_{IH} = V_{CC1} at INx			10	µA
I_{IL}	Low-level input current	V_{IL} = 0 V at INx	-10			µA
CMTI	Common mode transient immunity	V_I = V_{CC1} or 0 V, V_{CM} = 1200 V; see Figure 23-3	85	100		kV/µs

17 Supply Current Characteristics—3.3-V Supply

V_{CC1} = V_{CC2} = 3.3 V ± 10% (over recommended operating conditions unless otherwise noted)

PARAMETER	TEST CONDITIONS		SUPPLY CURRENT	MIN	TYP	MAX	UNIT
ISO7710-Q1							
Supply current - DC signal	V_I = V_{CC1} (ISO7710-Q1), V_I = 0 V (ISO7710-Q1 with F suffix)		I_{CC1}		0.5	1.2	mA
			I_{CC2}		0.6	1.1	
	V_I = 0V (ISO7710-Q1), V_I = V_{CC1} (ISO7710-Q1with F suffix)		I_{CC1}		1.6	2.4	
			I_{CC2}		0.6	1.2	
Supply current - AC signal	All channels switching with square wave clock input; C_L = 15 pF	1 Mbps	I_{CC1}		1.1	1.8	
			I_{CC2}		0.6	1.2	
		10 Mbps	I_{CC1}		1	1.8	
			I_{CC2}		1.1	1.7	
		100 Mbps	I_{CC1}		1.3	2.1	
			I_{CC2}		4.3	5.6	

Copyright © 2024 Texas Instruments Incorporated

18 Electrical Characteristics—2.5-V Supply

V_{CC1} = V_{CC2} = 2.5 V ± 10% (over recommended operating conditions unless otherwise noted)

PARAMETER		TEST CONDITIONS	MIN	TYP	MAX	UNIT
V_{OH}	High-level output voltage	I_{OH} = -1mA; see Figure 23-1	V_{CC2} - 0.2	2.45		V
V_{OL}	Low-level output voltage	I_{OL} = 1mA; see Figure 23-1		0.05	0.2	V
$V_{IT+(IN)}$	Rising input threshold voltage			0.6 x V_{CC1}	0.7 x V_{CC1}	V
$V_{IT-(IN)}$	Falling input threshold voltage		0.3 x V_{CC1}	0.4 x V_{CC1}		V
$V_{I(HYS)}$	Input threshold voltage hysteresis		0.1 x V_{CC1}	0.2 x V_{CC1}		V
I_{IH}	High-level input current	V_{IH} = V_{CC1} at INx			10	µA
I_{IL}	Low-level input current	V_{IL} = 0 V at INx	-10			µA
CMTI	Common mode transient immunity	V_I = V_{CC1} or 0 V, V_{CM} = 1200 V; see Figure 23-3	85	100		kV/µs

19 Supply Current Characteristics—2.5-V Supply

V_{CC1} = V_{CC2} = 2.5 V ± 10% (over recommended operating conditions unless otherwise noted)

PARAMETER	TEST CONDITIONS		SUPPLY CURRENT	MIN	TYP	MAX	UNIT
ISO7710-Q1							
Supply current - DC signal	V_I = V_{CC1} (ISO7710-Q1), V_I = 0 V (ISO7710-Q1 with F suffix)		I_{CC1}		0.5	1.2	mA
			I_{CC2}		0.6	1.1	
	V_I = 0V (ISO7710-Q1), V_I = V_{CC1} (ISO7710-Q1 with F suffix)		I_{CC1}		1.6	2.3	
			I_{CC2}		0.6	1.2	
Supply current - AC signal	All channels switching with square wave clock input; C_L = 15 pF	1 Mbps	I_{CC1}		1.1	1.8	
			I_{CC2}		0.6	1.2	
		10 Mbps	I_{CC1}		1.1	1.8	
			I_{CC2}		0.9	1.5	
		100 Mbps	I_{CC1}		1.2	2	
			I_{CC2}		3.4	4.6	

Copyright © 2024 Texas Instruments Incorporated

20 Switching Characteristics—5-V Supply

V_{CC1} = V_{CC2} = 5 V ± 10% (over recommended operating conditions unless otherwise noted)

PARAMETER		TEST CONDITIONS	MIN	TYP	MAX	UNIT
t_{PLH}, t_{PHL}	Propagation delay time	See Figure 23-1	6	11	17	ns
PWD	Pulse width distortion[(1)] $\|t_{PHL} – t_{PLH}\|$			0.6	5.9	ns
$t_{sk(pp)}$	Part-to-part skew time [(2)]				4.5	ns
t_r	Output signal rise time	See Figure 23-1		1.8	3.9	ns
t_f	Output signal fall time			1.9	3.9	ns
t_{DO}	Default output delay time from input power loss	Measured from the time V_{CC1} goes below 1.7V. See Figure 23-2		0.1	0.3	µs
t_{ie}	Time interval error	2^{16} – 1 PRBS data at 100 Mbps		1		ns

(1) Also known as pulse skew.
(2) $t_{sk(pp)}$ is the magnitude of the difference in propagation delay times between any terminals of different devices switching in the same direction while operating at identical supply voltages, temperature, input signals and loads.

21 Switching Characteristics—3.3-V Supply

V_{CC1} = V_{CC2} = 3.3 V ± 10% (over recommended operating conditions unless otherwise noted)

PARAMETER		TEST CONDITIONS	MIN	TYP	MAX	UNIT
t_{PLH}, t_{PHL}	Propagation delay time	See Figure 23-1	6	11	18.5	ns
PWD	Pulse width distortion[(1)] $\|t_{PHL} – t_{PLH}\|$			0.5	5.9	ns
$t_{sk(pp)}$	Part-to-part skew time [(2)]				4.5	ns
t_r	Output signal rise time	See Figure 23-1		0.7	3	ns
t_f	Output signal fall time			0.7	3	ns
t_{DO}	Default output delay time from input power loss	Measured from the time V_{CC1} goes below 1.7V. See Figure 23-2		0.1	0.3	µs
t_{ie}	Time interval error	2^{16} – 1 PRBS data at 100 Mbps		1		ns

(1) Also known as pulse skew.
(2) $t_{sk(pp)}$ is the magnitude of the difference in propagation delay times between any terminals of different devices switching in the same direction while operating at identical supply voltages, temperature, input signals and loads.

Copyright © 2024 Texas Instruments Incorporated

22 Switching Characteristics—2.5-V Supply

V_{CC1} = V_{CC2} = 2.5 V ± 10% (over recommended operating conditions unless otherwise noted)

PARAMETER		TEST CONDITIONS	MIN	TYP	MAX	UNIT
t_{PLH}, t_{PHL}	Propagation delay time	See Figure 23-1	7.5	12	21	ns
PWD	Pulse width distortion[(1)] $\|t_{PHL} – t_{PLH}\|$			0.2	5.9	ns
$t_{sk(pp)}$	Part-to-part skew time[(2)]				4.6	ns
t_r	Output signal rise time	See Figure 23-1		1	3.5	ns
t_f	Output signal fall time			1	3.5	ns
t_{DO}	Default output delay time from input power loss	Measured from the time V_{CC1} goes below 1.7V. See Figure 23-2		0.1	0.3	µs
t_{ie}	Time interval error	2^{16} – 1 PRBS data at 100 Mbps		1		ns

(1) Also known as pulse skew.
(2) $t_{sk(pp)}$ is the magnitude of the difference in propagation delay times between any terminals of different devices switching in the same direction while operating at identical supply voltages, temperature, input signals and loads.

23 Parameter Measurement Information

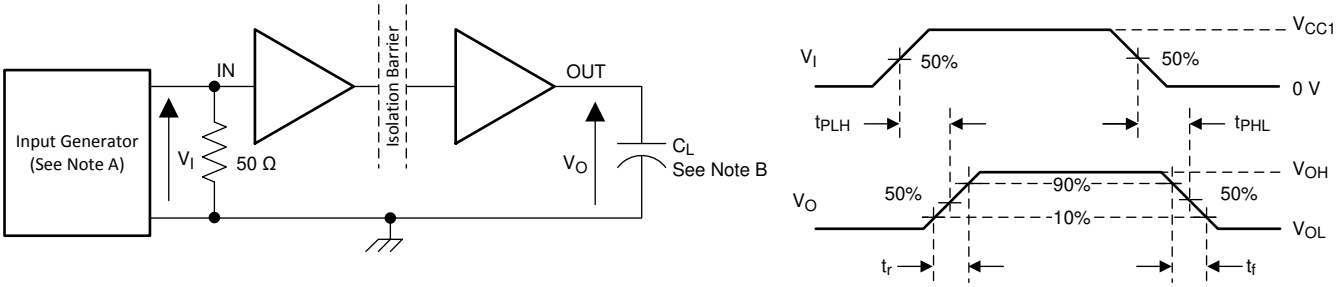

A. The input pulse is supplied by a generator having the following characteristics: PRR ≤ 50 kHz, 50% duty cycle, t_r ≤ 3 ns, t_f ≤ 3ns, Z_O = 50 Ω. At the input, 50 Ω resistor is required to terminate Input Generator signal. The 50 Ω resistor is not needed in actual application.

B. C_L = 15 pF and includes instrumentation and fixture capacitance within ±20%.

Figure 23-1. Switching Characteristics Test Circuit and Voltage Waveforms

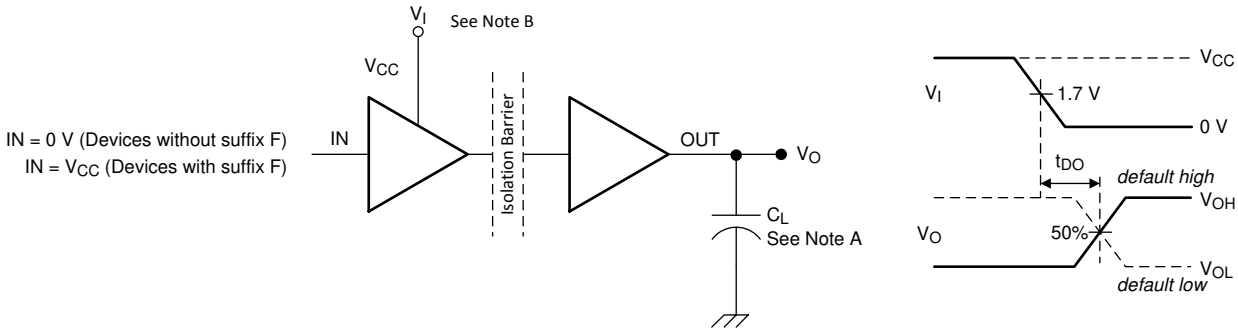

A. C_L = 15 pF and includes instrumentation and fixture capacitance within ±20%.

B. Power Supply Ramp Rate = 10 mV/ns

Figure 23-2. Default Output Delay Time Test Circuit and Voltage Waveforms

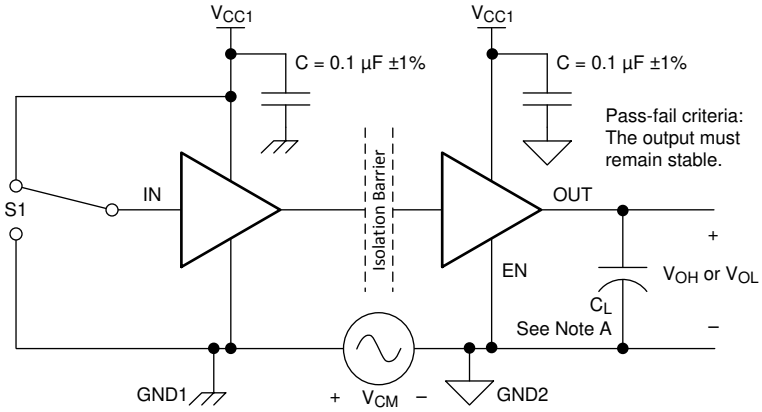

A. C_L = 15 pF and includes instrumentation and fixture capacitance within ±20%.

Figure 23-3. Common-Mode Transient Immunity Test Circuit

Copyright © 2024 Texas Instruments Incorporated

24 Detailed Description

24.1 Overview

The ISO7710-Q1 device has an ON-OFF keying (OOK) modulation scheme to transmit the digital data across a silicon dioxide based isolation barrier. The transmitter sends a high frequency carrier across the barrier to represent one digital state and sends no signal to represent the other digital state. The receiver demodulates the signal after advanced signal conditioning and produces the output through a buffer stage. The device also incorporates advanced circuit techniques to maximize the CMTI performance and minimize the radiated emissions due the high frequency carrier and IO buffer switching. The conceptual block diagram of a digital capacitive isolator, Figure 24-1, shows a functional block diagram of a typical channel.

24.2 Functional Block Diagram

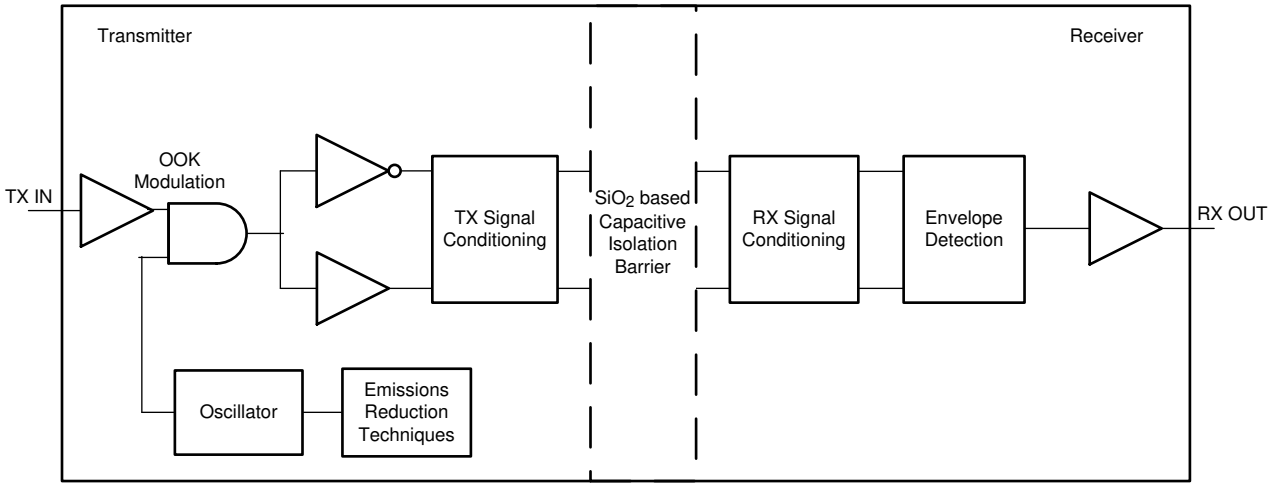

Figure 24-1. Conceptual Block Diagram of a Digital Capacitive Isolator

Figure 24-2 shows a conceptual detail of how the OOK scheme works.

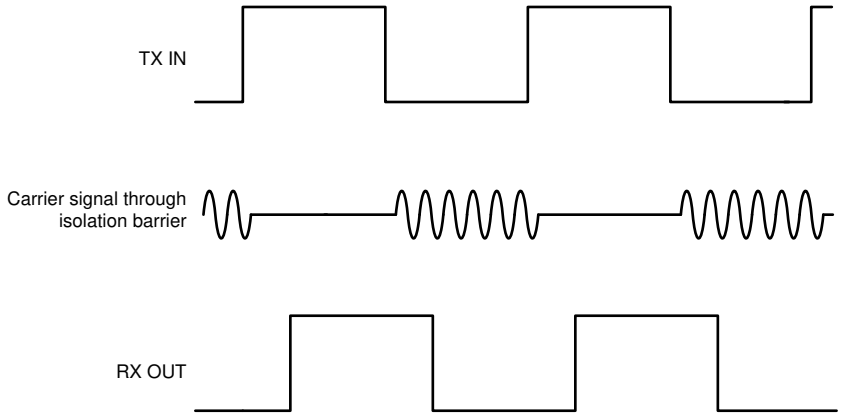

Figure 24-2. On-Off Keying (OOK) Based Modulation Scheme

24.3 Feature Description

The ISO7710-Q1 device is available in two default output state options to enable a variety of application uses. Table 24-1 lists the device features.

Table 24-1. Device Features

PART NUMBER	MAXIMUM DATA RATE	CHANNEL DIRECTION	DEFAULT OUTPUT STATE	PACKAGE	RATED ISOLATION[(1)]
ISO7710-Q1	100 Mbps	1 Forward, 0 Reverse	High	DW-16	5000 V_{RMS} / 8000 V_{PK}
				D-8	3000 V_{RMS} / 4242 V_{PK}
ISO7710-Q1 with F suffix	100 Mbps	1 Forward, 0 Reverse	Low	DW-16	5000 V_{RMS} / 8000 V_{PK}
				D-8	3000 V_{RMS} / 4242 V_{PK}

(1) See the *Safety-Related Certifications* section for detailed isolation ratings.

24.3.1 Electromagnetic Compatibility (EMC) Considerations

Many applications in harsh industrial environment are sensitive to disturbances such as electrostatic discharge (ESD), electrical fast transient (EFT), surge and electromagnetic emissions. These electromagnetic disturbances are regulated by international standards such as IEC 61000-4-x and CISPR 22. Although system-level performance and reliability depends, to a large extent, on the application board design and layout, the ISO7710-Q1 device incorporates many chip-level design improvements for overall system robustness. Some of these improvements include:

- Robust ESD protection cells for input and output signal pins and inter-chip bond pads.
- Low-resistance connectivity of ESD cells to supply and ground pins.
- Enhanced performance of high voltage isolation capacitor for better tolerance of ESD, EFT and surge events.
- Bigger on-chip decoupling capacitors to bypass undesirable high energy signals through a low impedance path.
- PMOS and NMOS devices isolated from each other by using guard rings to avoid triggering of parasitic SCRs.
- Reduced common mode currents across the isolation barrier by providing purely differential internal operation.

Copyright © 2024 Texas Instruments Incorporated

24.4 Device Functional Modes

Table 24-2 lists the functional modes of ISO7710-Q1 device.

Table 24-2. Function Table

V_{CC1} (1)	V_{CC2}	INPUT (IN)(3)	OUTPUT (OUT)	COMMENTS
PU	PU	H	H	Normal Operation: A channel output assumes the logic state of the input.
		L	L	
		Open	Default	Default mode: When IN is open, the corresponding channel output goes to the default logic state. Default is *High* for ISO7710-Q1 and *Low* for ISO7710-Q1 with F suffix.
PD	PU	X	Default	Default mode: When V_{CC1} is unpowered, a channel output assumes the logic state based on the selected default option. Default is *High* for ISO7710-Q1 and *Low* for ISO7710-Q1 with F suffix. When V_{CC1} transitions from unpowered to powered-up, a channel output assumes the logic state of the input. When V_{CC1} transitions from powered-up to unpowered, channel output assumes the selected default state.
X	PD	X	Undetermined	When V_{CC2} is unpowered, a channel output is undetermined (2). When V_{CC2} transitions from unpowered to powered-up, a channel output assumes the logic state of the input

(1) PU = Powered up ($V_{CC} \geq 2.25$ V); PD = Powered down ($V_{CC} \leq 1.7$ V); X = Irrelevant; H = High level; L = Low level
(2) The outputs are in undetermined state when 1.7 V < V_{CC1}, V_{CC2} < 2.25 V.
(3) A strongly driven input signal can weakly power the floating V_{CC} using an internal protection diode and cause undetermined output.

24.4.1 Device I/O Schematics

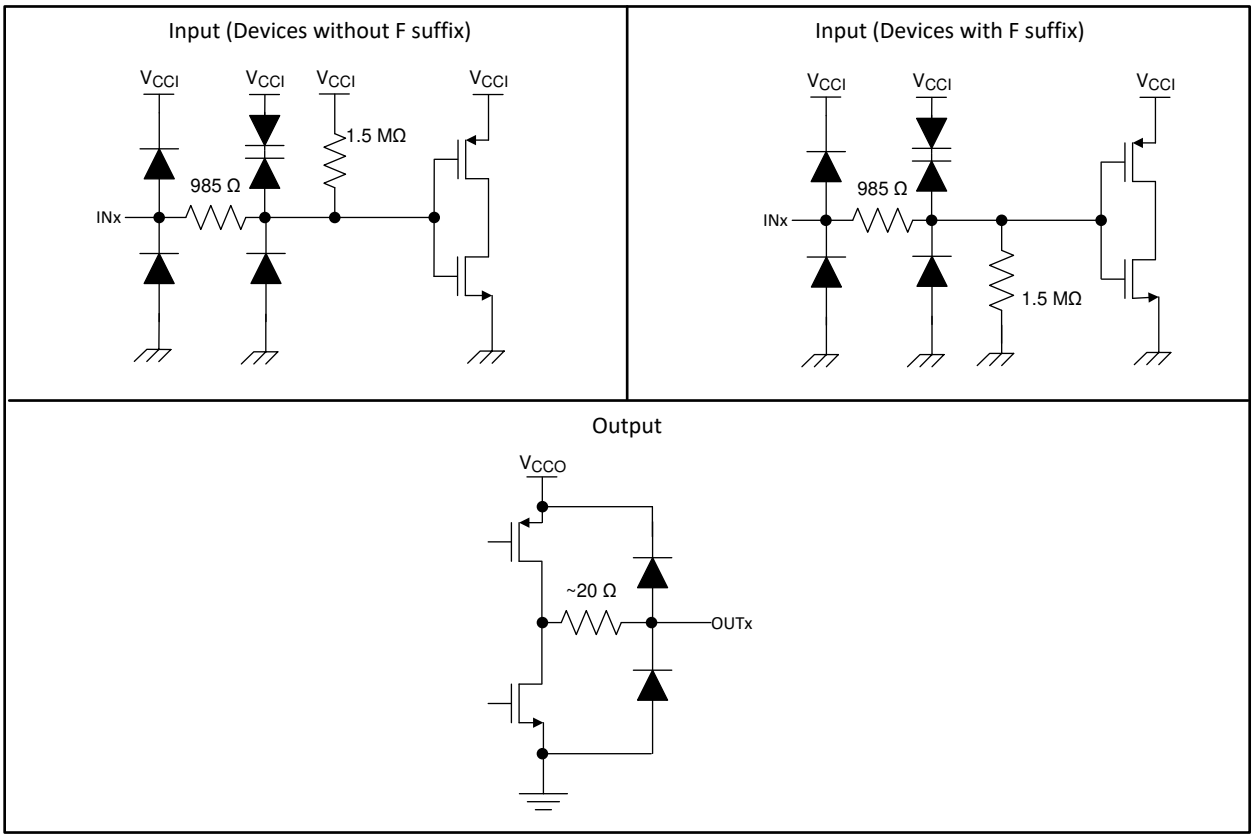

Copyright © 2016, Texas Instruments Incorporated

Figure 24-3. Device I/O Schematics

25 Application and Implementation

Note

Information in the following applications sections is not part of the TI component specification, and TI does not warrant its accuracy or completeness. TI's customers are responsible for determining suitability of components for their purposes, as well as validating and testing their design implementation to confirm system functionality.

25.1 Application Information

The ISO7710-Q1 device is a high-performance, single-channel digital isolator. The device uses single-ended CMOS-logic switching technology. The supply voltage range is from 2.25 V to 5.5 V for both supplies, V_{CC1} and V_{CC2}. When designing with digital isolators, keep in mind that because of the single-ended design structure, digital isolators do not conform to any specific interface standard and are only intended for isolating single-ended CMOS or TTL digital signal lines. The isolator is typically placed between the data controller (that is, µC or UART), and a data converter or a line transceiver, regardless of the interface type or standard.

25.2 Typical Application

The ISO7710-Q1 device can be used with Texas Instruments' mixed signal microcontroller, CAN transceiver, transformer driver, and low-dropout voltage regulator to create an Isolated CAN Interface as shown below.

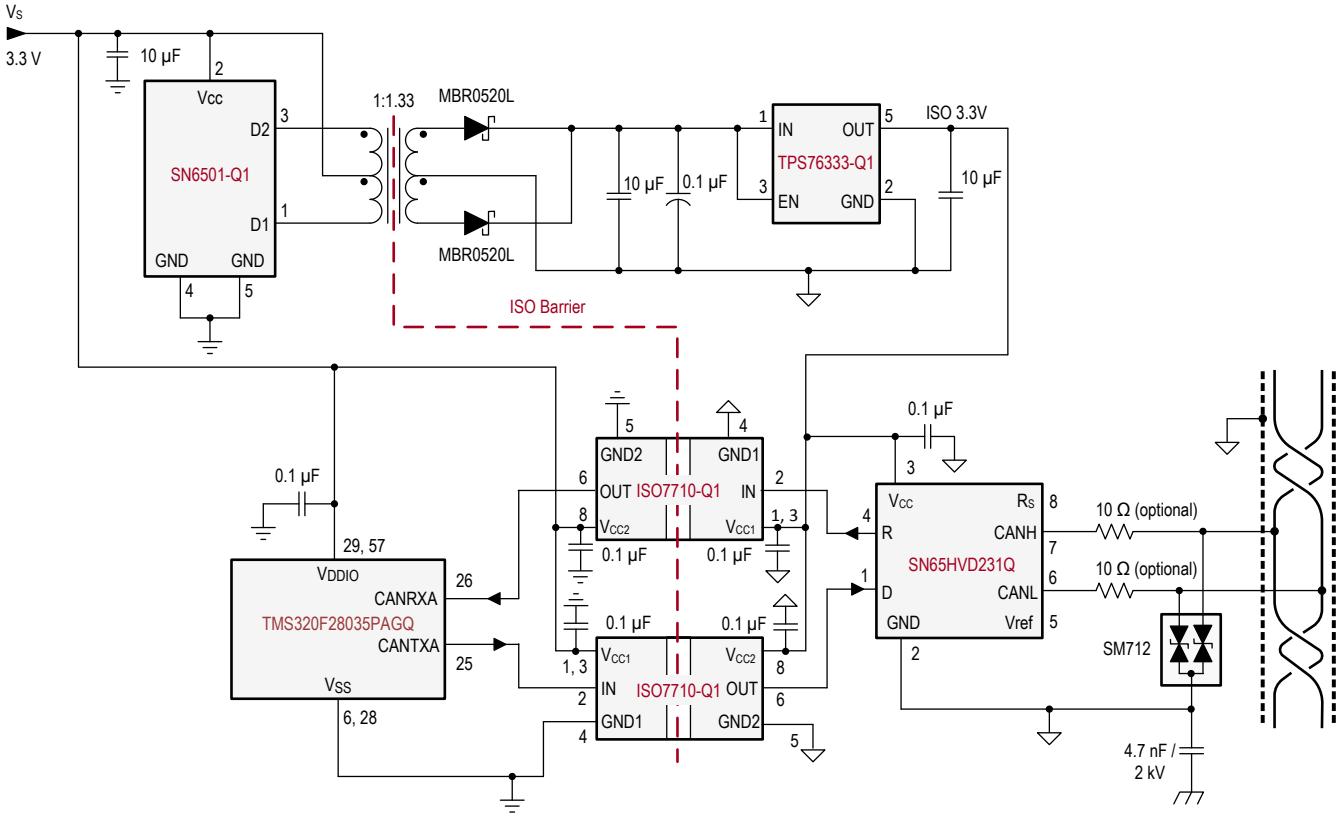

Copyright © 2017, Texas Instruments Incorporated

Figure 25-1. Isolated CAN Interface

Copyright © 2024 Texas Instruments Incorporated

25.2.1 Design Requirements

To design with this device, use the parameters listed in Table 25-1.

Table 25-1. Design Parameters

PARAMETER	VALUE
Supply voltage, V_{CC1} and V_{CC2}	2.25 V to 5.5 V
Decoupling capacitor between V_{CC1} and GND1	0.1 µF
Decoupling capacitor from V_{CC2} and GND2	0.1 µF

25.2.2 Detailed Design Procedure

Unlike optocouplers, which require components to improve performance, provide bias, or limit current, the ISO7710-Q1 device only requires two external bypass capacitors to operate.

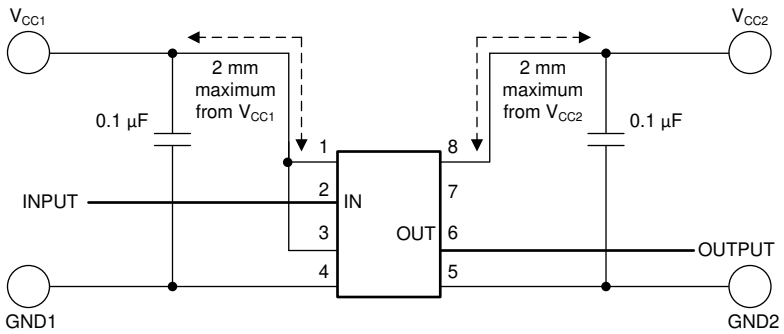

Figure 25-2. Typical ISO7710-Q1 Circuit Hook-up

25.2.3 Application Curve

The following typical eye diagram of the ISO7710-Q1 device indicates low jitter and wide open eye at the maximum data rate of 100 Mbps.

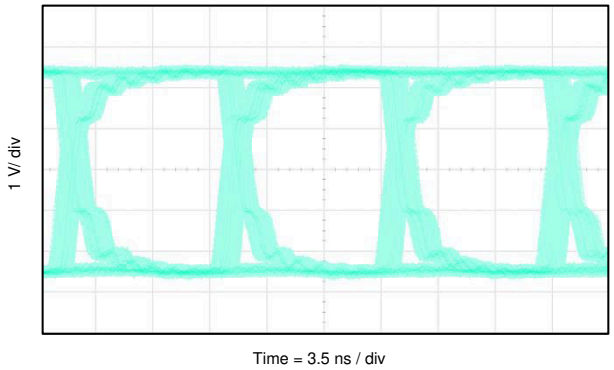

Figure 25-3. ISO7710-Q1 Eye Diagram at 100 Mbps PRBS, 5-V Supplies and 25°C

25.2.3.1 *Insulation Lifetime*

Insulation lifetime projection data is collected by using industry-standard Time Dependent Dielectric Breakdown (TDDB) test method. In this test, all pins on each side of the barrier are tied together creating a two-terminal device and high voltage applied between the two sides; See Figure 25-4 for TDDB test setup. The insulation breakdown data is collected at various high voltages switching at 60 Hz over temperature. For reinforced insulation, VDE standard requires the use of TDDB projection line with failure rate of less than 1 part per million (ppm). Even though the expected minimum insulation lifetime is 20 years at the specified working isolation

voltage, VDE reinforced certification requires additional safety margin of 20% for working voltage and 50% for lifetime which translates into minimum required insulation lifetime of 30 years at a working voltage that's 20% higher than the specified value.

Figure 25-5 shows the intrinsic capability of the isolation barrier to withstand high voltage stress over the lifetime of the device. Based on the TDDB data, the intrinsic capability of the insulation is 1500 V_{RMS} with a lifetime of 36 years. Other factors, such as package size, pollution degree, material group, and more, can further limit the working voltage of the component. The working voltage of DW-16 package is specified up to 1500 V_{RMS} and D-8 package up to 450 V_{RMS}. At the lower working voltages, the corresponding insulation lifetime is much longer than 36 years.

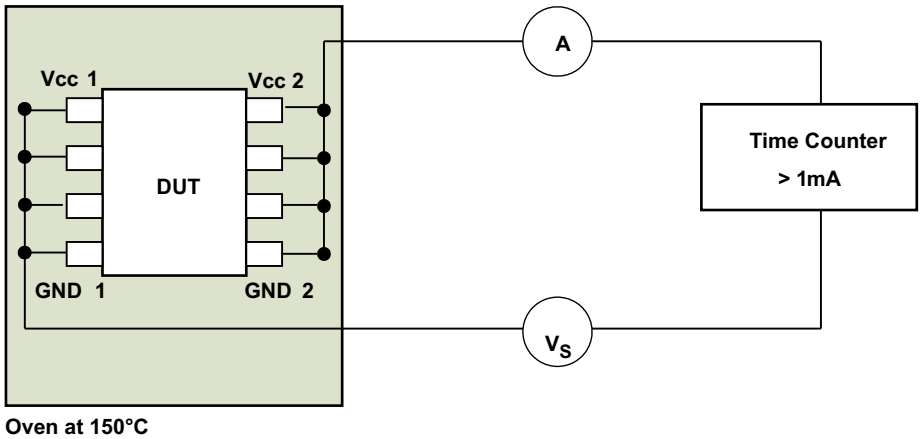

Figure 25-4. Test Setup for Insulation Lifetime Measurement

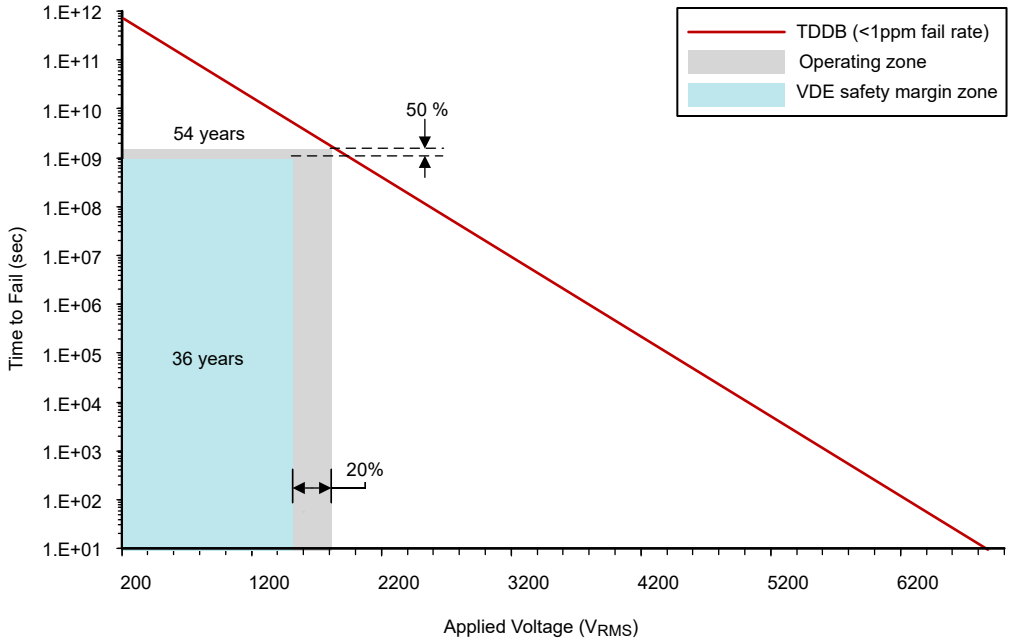

Figure 25-5. Insulation Lifetime Projection Data

25.3 Power Supply Recommendations

To help provide reliable operation at data rates and supply voltages, a 0.1-µF bypass capacitor is recommended at the input and output supply pins (V_{CC1} and V_{CC2}). The capacitors must be placed as close to the supply pins as possible. If only a single primary-side power supply is available in an application, isolated power can be

Copyright © 2024 Texas Instruments Incorporated

generated for the secondary-side with the help of a transformer driver such as Texas Instruments' SN6501-Q1 . For such applications, detailed power supply design and transformer selection recommendations are available in *SN6501-Q1 Transformer Driver for Isolated Power Supplies* .

25.4 Layout

25.4.1 Layout Guidelines

A minimum of four layers is required to accomplish a low EMI PCB design (see Figure 25-6). Layer stacking must be in the following order (top-to-bottom): high-speed signal layer, ground plane, power plane and low-frequency signal layer.

- Routing the high-speed traces on the top layer avoids the use of vias (and the introduction of via inductances) and allows for clean interconnects between the isolator and the transmitter and receiver circuits of the data link.
- Placing a solid ground plane next to the high-speed signal layer establishes controlled impedance for transmission line interconnects and provides an excellent low-inductance path for the return current flow.
- Placing the power plane next to the ground plane creates additional high-frequency bypass capacitance of approximately 100 pF/in^2.
- Routing the slower speed control signals on the bottom layer allows for greater flexibility as these signal links typically have margin to tolerate discontinuities such as vias.

If an additional supply voltage plane or signal layer is needed, add a second power or ground plane system to the stack to keep the planes symmetrical. This design makes the stack mechanically stable and prevents warping. Also the power and ground plane of each power system can be placed closer together, thus increasing the high-frequency bypass capacitance significantly.

For detailed layout recommendations, refer to the *Digital Isolator Design Guide*.

25.4.1.1 PCB Material

For digital circuit boards operating at less than 150 Mbps, (or rise and fall times greater than 1 ns), and trace lengths of up to 10 inches, use standard FR-4 UL94V-0 printed circuit board. This PCB is preferred over cheaper alternatives because of lower dielectric losses at high frequencies, less moisture absorption, greater strength and stiffness, and the self-extinguishing flammability-characteristics.

25.4.2 Layout Example

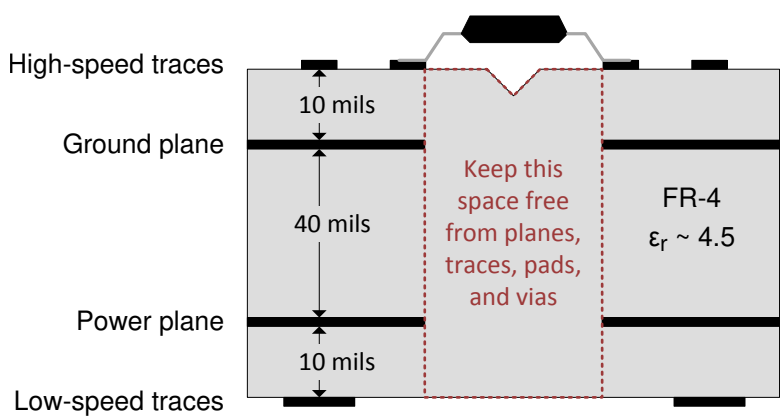

Figure 25-6. Layout Example

26 Device and Documentation Support

26.1 Documentation Support

26.1.1 Related Documentation

For related documentation, see the following:

- Texas Instruments, *Digital Isolator Design Guide*, application note
- Texas Instruments, *Isolation Glossary*, application note
- Texas Instruments, *How to use isolation to improve ESD, EFT, and Surge immunity in industrial systems*, analog design journal
- Texas Instruments, *SN6501-Q1 Transformer Driver for Isolated Power Supplies*, data sheet
- Texas Instruments, *SN65HVD231Q Automotive 3.3-V CAN Transceiver*, data sheet
- Texas Instruments, *TPS76333-Q1Low-Power 150-mA Low-Dropout Linear Regulators*, data sheet
- Texas Instruments, *TMS320F28035PAGQ Piccolo™ Microcontrollers*, data sheet

26.2 Related Links

The table below lists quick access links. Categories include technical documents, support and community resources, tools and software, and quick access to sample or buy.

26.3 Receiving Notification of Documentation Updates

To receive notification of documentation updates, navigate to the device product folder on ti.com. Click on *Notifications* to register and receive a weekly digest of any product information that has changed. For change details, review the revision history included in any revised document.

26.4 Support Resources

TI E2E™ support forums are an engineer's go-to source for fast, verified answers and design help — straight from the experts. Search existing answers or ask your own question to get the quick design help you need.

Linked content is provided "AS IS" by the respective contributors. They do not constitute TI specifications and do not necessarily reflect TI's views; see TI's Terms of Use.

26.5 Trademarks

Piccolo™ is a trademark of Texas Instruments.
TI E2E™ is a trademark of Texas Instruments.
All trademarks are the property of their respective owners.

26.6 Electrostatic Discharge Caution

This integrated circuit can be damaged by ESD. Texas Instruments recommends that all integrated circuits be handled with appropriate precautions. Failure to observe proper handling and installation procedures can cause damage.

ESD damage can range from subtle performance degradation to complete device failure. Precision integrated circuits may be more susceptible to damage because very small parametric changes could cause the device not to meet its published specifications.

26.7 Glossary

TI Glossary	This glossary lists and explains terms, acronyms, and definitions.

Copyright © 2024 Texas Instruments Incorporated

27 Revision History

NOTE: Page numbers for previous revisions may differ from page numbers in the current version.

Changes from Revision B (October 2020) to Revision C (December 2024) **Page**

- Changed standard name from: "DIN V VDE V 0884-11:2017-01" to: "DIN EN IEC 60747-17 (VDE 0884-17)" throughout the document....1
- Deleted references to standard IEC/EN/CSA 60950-1 throughout the document....1
- Deleted standard revision and year references from all standard names throughout the document 1
- Updated the number formatting tables, figures, and cross-references throughout the document....1
- Added "Contact discarge per IEC 61000-4-2" specification of 8000V 5
- Changed "Signaling rate" to "Data rate" and added table note....6
- Updated maximum power dissipation in the power ratings section....7
- Updated distance through isolation, while maintaining other insulation specifications....8
- Updated DW-16 package V_{IORM} and V_{IOWM} values....8
- Added TDDB figure reference to V_{IOWM} 8
- Updated V_{IOSM}, V_{IOTM}, q_{pd} test conditions....8
- Updated maximum total current consumption values throughout the supply current characteristics sections. 11
- Updated maximum propagation delay specifications throughout the switching characteristics sections.... 14
- Updated TDDB plot and the projected lifetime....21
- Changed working voltage lifetime margin from: 87.5% to: 50%, minimum required insulation lifetime from: 37.5 years to: 30 years and insulation lifetime per TDDB from: 135 years to: 169 years per DIN EN IEC 60747-17 (VDE 0884-17)....21
- Changed Figure 25-5 per DIN EN IEC 60747-17 (VDE 0884-17)....21

Changes from Revision A (April 2020) to Revision B (October 2020) **Page**

- Added Functional Safety bullets in Section 1 1
- Added D-8 values for TUV....9

Changes from Revision * (March 2017) to Revision A (April 2020) **Page**

- Made editorial and cosmetic changes throughout the document 1
- Changed From: "Isolation Barrier Life: >40 Years" To: " >100-year projected lifetime at 1500 V_{RMS} working voltage" in Section 1 1
- Added "Up to 5000 V_{RMS} isolation rating" in Section 1 1
- Added "Up to 12.8 kV surge capability" in Section 1 1
- Added "±8 kV IEC 61000-4-2 contact discharge protection across isolation barrier" in Section 1 1
- Changed From: "VDE Reinforced Insulation per DIN V VDE V 0884-10 (VDE V 0884-10):2006-12" To: "VDE reinforced insulation per DIN VDE V 0884-11:2017-01" in Section 1 1
- Combined CSA, CQC, and TUV bullets into a single bullet with standard names in Section 1 1
- Deleted "VDE, UL, CSA, and TUV Certifications for DW-16 package complete; all other certifications planned" bullet in Section 1 1
- Updated list of applications in Section 2 section....1
- Updated Simplified Schematic to show two isolation capacitors in series instead of a single isolation capacitor 1
- Added Climatic category....8
- Updated CSA column and changed DW package to (DW-16)....9
- Changed t_{ie} TYP value from 1.5 to 1 in Switching Characteristics tables throughout the document.... 14
- Corrected ground symbols for "Input (Devices with F suffix)" in Section 24.4.1 19
- Fixed Figure 25-2 INPUT wire connection 21
- Added Section 25.2.3.1 sub-section under Section 25.2.3 section 21

- Added '*How to use isolation to improve ESD, EFT, and Surge immunity in industrial systems*' to Section 26.1 section 24

28 Mechanical, Packaging, and Orderable Information

The following pages include mechanical, packaging, and orderable information. This information is the most current data available for the designated devices. This data is subject to change without notice and revision of this document. For browser-based versions of this data sheet, refer to the left-hand navigation.

Copyright © 2024 Texas Instruments Incorporated

PACKAGING INFORMATION

Orderable part number	Status (1)	Material type (2)	Package | Pins	Package qty | Carrier	RoHS (3)	Lead finish/ Ball material (4)	MSL rating/ Peak reflow (5)	Op temp (°C)	Part marking (6)
ISO7710FQDRQ1	Active	Production	SOIC (D) | 8	2500 | LARGE T&R	Yes	NIPDAU	Level-2-260C-1 YEAR	-40 to 125	(7710F, 7710FQ)
ISO7710FQDRQ1.A	Active	Production	SOIC (D) | 8	2500 | LARGE T&R	Yes	NIPDAU	Level-2-260C-1 YEAR	-40 to 125	(7710F, 7710FQ)
ISO7710FQDRQ1.B	Active	Production	SOIC (D) | 8	2500 | LARGE T&R	Yes	NIPDAU	Level-2-260C-1 YEAR	-40 to 125	(7710F, 7710FQ)
ISO7710FQDWRQ1	Active	Production	SOIC (DW) | 16	2000 | LARGE T&R	Yes	NIPDAU	Level-2-260C-1 YEAR	-40 to 125	(ISO7710F, ISO7710 FQ)
ISO7710FQDWRQ1.A	Active	Production	SOIC (DW) | 16	2000 | LARGE T&R	Yes	NIPDAU	Level-2-260C-1 YEAR	-40 to 125	(ISO7710F, ISO7710 FQ)
ISO7710FQDWRQ1.B	Active	Production	SOIC (DW) | 16	2000 | LARGE T&R	Yes	NIPDAU	Level-2-260C-1 YEAR	-40 to 125	(ISO7710F, ISO7710 FQ)
ISO7710QDRQ1	Active	Production	SOIC (D) | 8	2500 | LARGE T&R	Yes	NIPDAU	Level-2-260C-1 YEAR	-40 to 125	(7710, 7710Q)
ISO7710QDRQ1.A	Active	Production	SOIC (D) | 8	2500 | LARGE T&R	Yes	NIPDAU	Level-2-260C-1 YEAR	-40 to 125	(7710, 7710Q)
ISO7710QDRQ1.B	Active	Production	SOIC (D) | 8	2500 | LARGE T&R	Yes	NIPDAU	Level-2-260C-1 YEAR	-40 to 125	(7710, 7710Q)
ISO7710QDWRQ1	Active	Production	SOIC (DW) | 16	2000 | LARGE T&R	Yes	NIPDAU	Level-2-260C-1 YEAR	-40 to 125	(ISO7710, ISO7710Q)
ISO7710QDWRQ1.A	Active	Production	SOIC (DW) | 16	2000 | LARGE T&R	Yes	NIPDAU	Level-2-260C-1 YEAR	-40 to 125	(ISO7710, ISO7710Q)
ISO7710QDWRQ1.B	Active	Production	SOIC (DW) | 16	2000 | LARGE T&R	Yes	NIPDAU	Level-2-260C-1 YEAR	-40 to 125	(ISO7710, ISO7710Q)

(1) **Status:** For more details on status, see our product life cycle.

(2) **Material type:** When designated, preproduction parts are prototypes/experimental devices, and are not yet approved or released for full production. Testing and final process, including without limitation quality assurance, reliability performance testing, and/or process qualification, may not yet be complete, and this item is subject to further changes or possible discontinuation. If available for ordering, purchases will be subject to an additional waiver at checkout, and are intended for early internal evaluation purposes only. These items are sold without warranties of any kind.

(3) **RoHS values:** Yes, No, RoHS Exempt. See the TI RoHS Statement for additional information and value definition.

(4) **Lead finish/Ball material:** Parts may have multiple material finish options. Finish options are separated by a vertical ruled line. Lead finish/Ball material values may wrap to two lines if the finish value exceeds the maximum column width.

(5) **MSL rating/Peak reflow:** The moisture sensitivity level ratings and peak solder (reflow) temperatures. In the event that a part has multiple moisture sensitivity ratings, only the lowest level per JEDEC standards is shown. Refer to the shipping label for the actual reflow temperature that will be used to mount the part to the printed circuit board.

(6) **Part marking:** There may be an additional marking, which relates to the logo, the lot trace code information, or the environmental category of the part.

Multiple part markings will be inside parentheses. Only one part marking contained in parentheses and separated by a "~" will appear on a part. If a line is indented then it is a continuation of the previous line and the two combined represent the entire part marking for that device.

Important Information and Disclaimer: The information provided on this page represents TI's knowledge and belief as of the date that it is provided. TI bases its knowledge and belief on information provided by third parties, and makes no representation or warranty as to the accuracy of such information. Efforts are underway to better integrate information from third parties. TI has taken and continues to take reasonable steps to provide representative and accurate information but may not have conducted destructive testing or chemical analysis on incoming materials and chemicals. TI and TI suppliers consider certain information to be proprietary, and thus CAS numbers and other limited information may not be available for release.

In no event shall TI's liability arising out of such information exceed the total purchase price of the TI part(s) at issue in this document sold by TI to Customer on an annual basis.

OTHER QUALIFIED VERSIONS OF ISO7710-Q1 :

- Catalog : ISO7710

NOTE: Qualified Version Definitions:

- Catalog - TI's standard catalog product

TAPE AND REEL INFORMATION

REEL DIMENSIONS

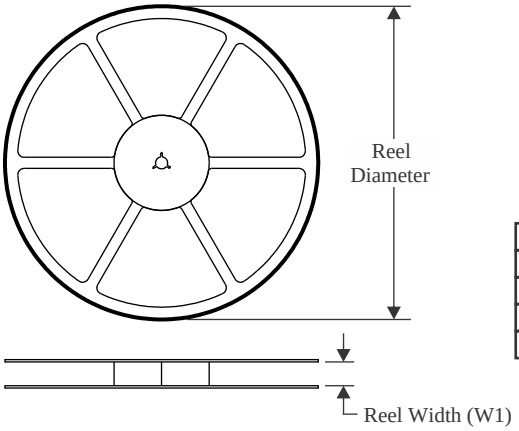

TAPE DIMENSIONS

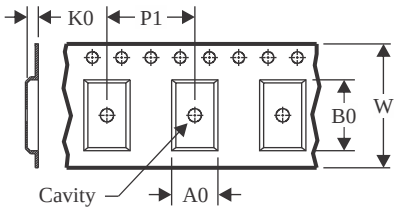

A0	Dimension designed to accommodate the component width
B0	Dimension designed to accommodate the component length
K0	Dimension designed to accommodate the component thickness
W	Overall width of the carrier tape
P1	Pitch between successive cavity centers

QUADRANT ASSIGNMENTS FOR PIN 1 ORIENTATION IN TAPE

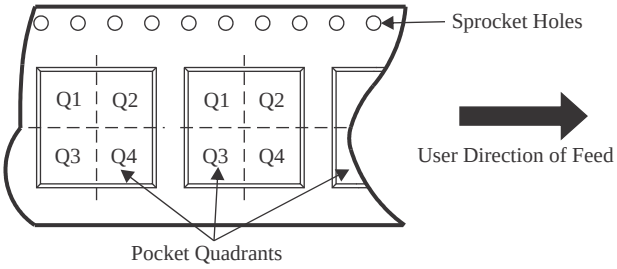

*All dimensions are nominal

Device	Package Type	Package Drawing	Pins	SPQ	Reel Diameter (mm)	Reel Width W1 (mm)	A0 (mm)	B0 (mm)	K0 (mm)	P1 (mm)	W (mm)	Pin1 Quadrant
ISO7710FQDRQ1	SOIC	D	8	2500	330.0	12.4	6.4	5.2	2.1	8.0	12.0	Q1
ISO7710FQDWRQ1	SOIC	DW	16	2000	330.0	16.4	10.75	10.7	2.7	12.0	16.0	Q1
ISO7710QDRQ1	SOIC	D	8	2500	330.0	12.4	6.4	5.2	2.1	8.0	12.0	Q1
ISO7710QDWRQ1	SOIC	DW	16	2000	330.0	16.4	10.75	10.7	2.7	12.0	16.0	Q1

TAPE AND REEL BOX DIMENSIONS

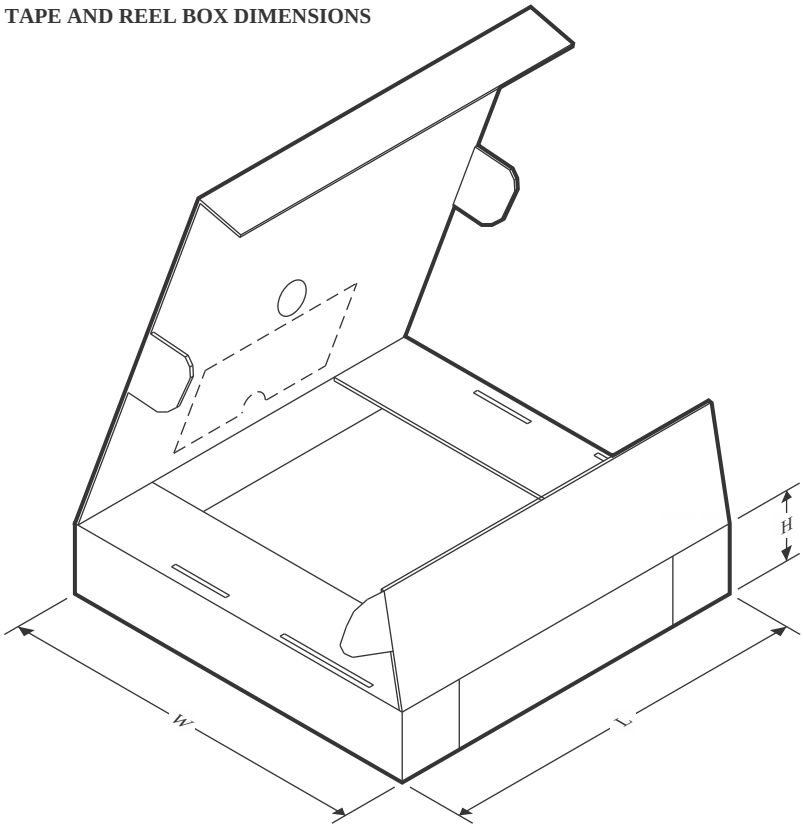

*All dimensions are nominal

Device	Package Type	Package Drawing	Pins	SPQ	Length (mm)	Width (mm)	Height (mm)
ISO7710FQDRQ1	SOIC	D	8	2500	350.0	350.0	43.0
ISO7710FQDWRQ1	SOIC	DW	16	2000	353.0	353.0	32.0
ISO7710QDRQ1	SOIC	D	8	2500	350.0	350.0	43.0
ISO7710QDWRQ1	SOIC	DW	16	2000	353.0	353.0	32.0

GENERIC PACKAGE VIEW

DW 16

SOIC - 2.65 mm max height

7.5 x 10.3, 1.27 mm pitch

SMALL OUTLINE INTEGRATED CIRCUIT

This image is a representation of the package family, actual package may vary.
Refer to the product data sheet for package details.

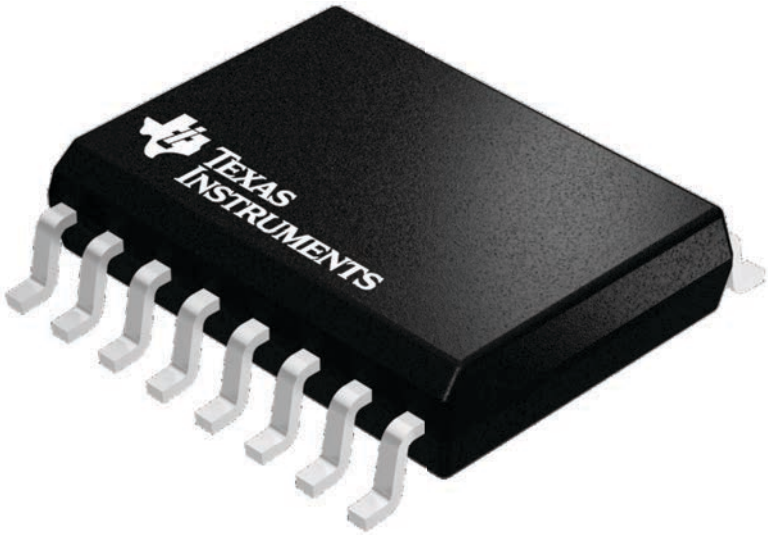

4224780/A

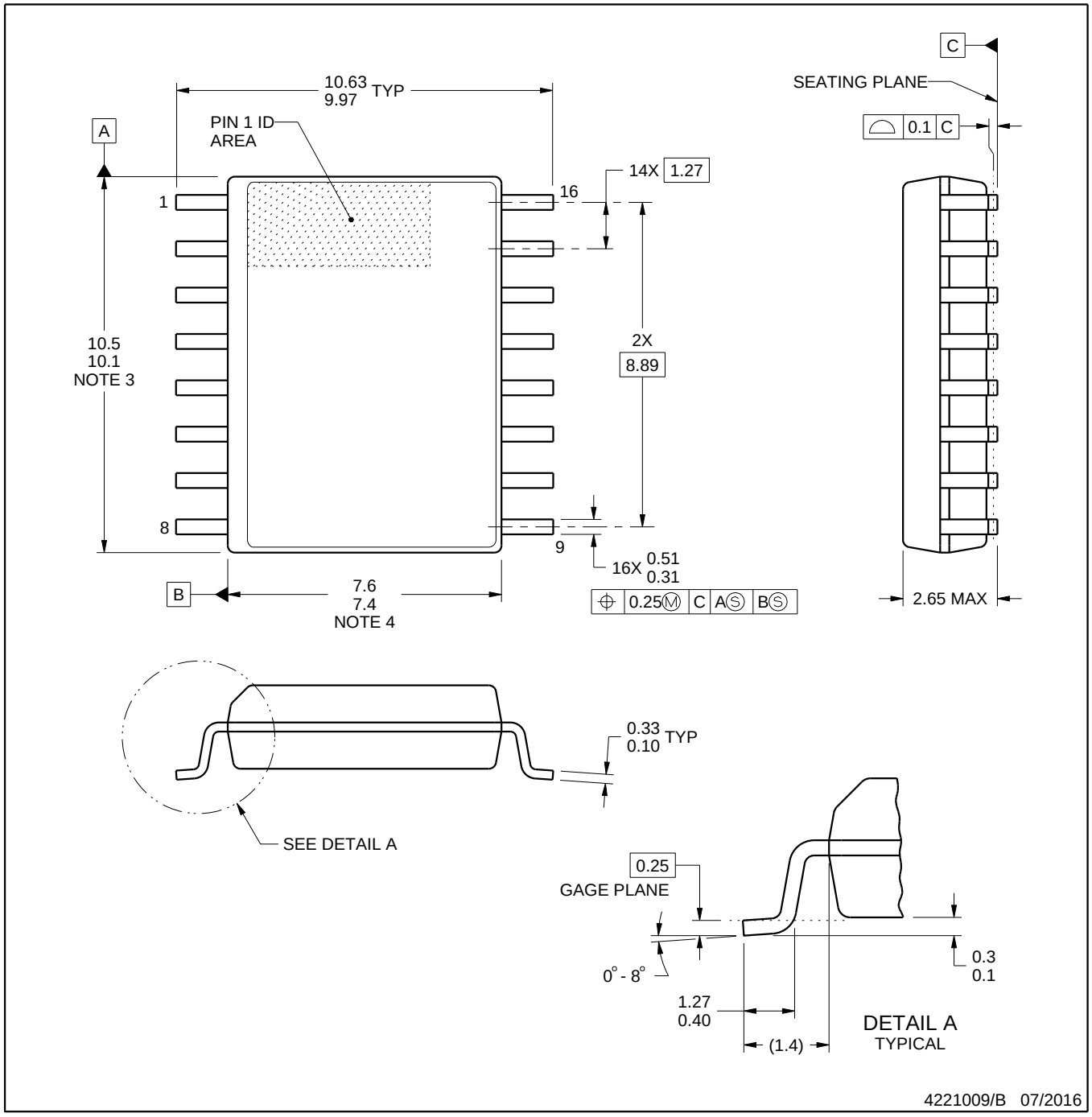

NOTES:

1. All linear dimensions are in millimeters. Dimensions in parenthesis are for reference only. Dimensioning and tolerancing per ASME Y14.5M.
2. This drawing is subject to change without notice.
3. This dimension does not include mold flash, protrusions, or gate burrs. Mold flash, protrusions, or gate burrs shall not exceed 0.15 mm, per side.
4. This dimension does not include interlead flash. Interlead flash shall not exceed 0.25 mm, per side.
5. Reference JEDEC registration MS-013.

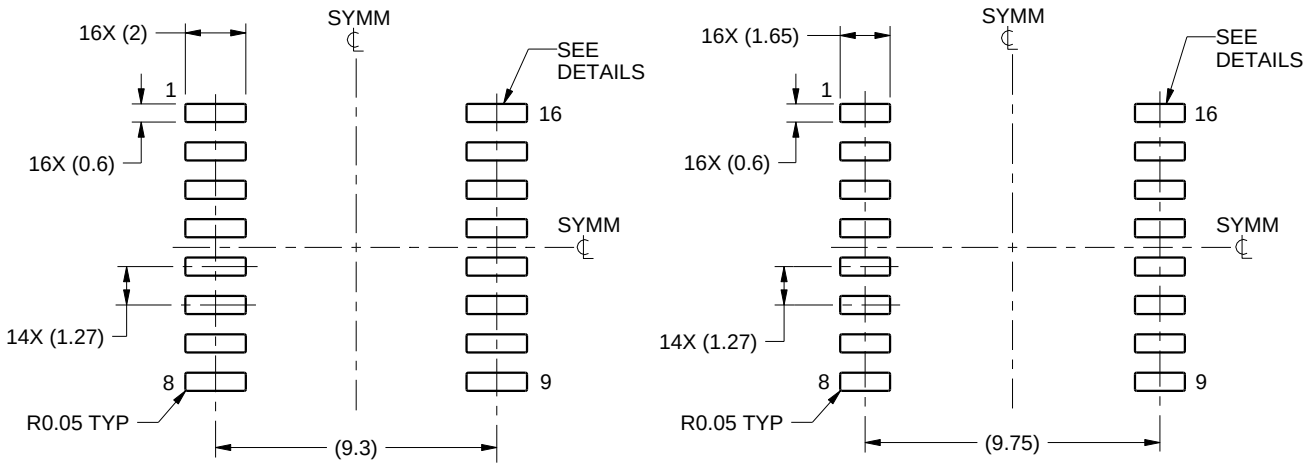

IPC-7351 NOMINAL
7.3 mm CLEARANCE/CREEPAGE

HV / ISOLATION OPTION
8.1 mm CLEARANCE/CREEPAGE

LAND PATTERN EXAMPLE
SCALE:4X

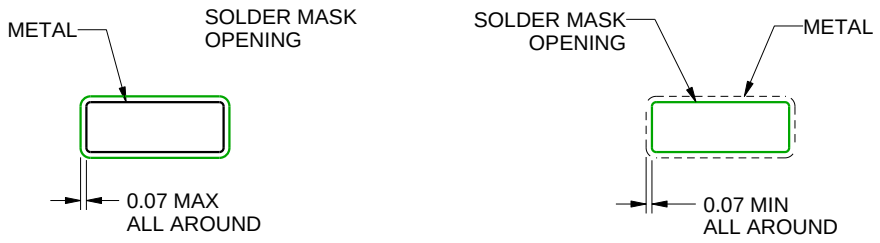

NON SOLDER MASK DEFINED

SOLDER MASK DEFINED

SOLDER MASK DETAILS

4221009/B 07/2016

NOTES: (continued)

6. Publication IPC-7351 may have alternate designs.
7. Solder mask tolerances between and around signal pads can vary based on board fabrication site.

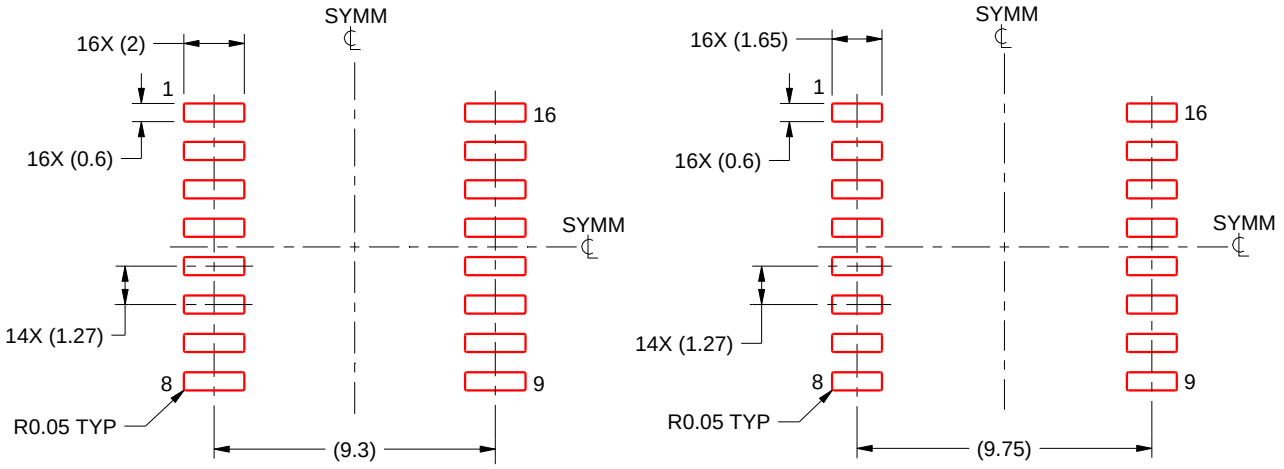

IPC-7351 NOMINAL
7.3 mm CLEARANCE/CREEPAGE

HV / ISOLATION OPTION
8.1 mm CLEARANCE/CREEPAGE

SOLDER PASTE EXAMPLE
BASED ON 0.125 mm THICK STENCIL
SCALE:4X

4221009/B 07/2016

NOTES: (continued)

8. Laser cutting apertures with trapezoidal walls and rounded corners may offer better paste release. IPC-7525 may have alternate design recommendations.
9. Board assembly site may have different recommendations for stencil design.

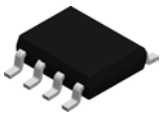

PACKAGE OUTLINE

D0008A

SOIC - 1.75 mm max height

SMALL OUTLINE INTEGRATED CIRCUIT

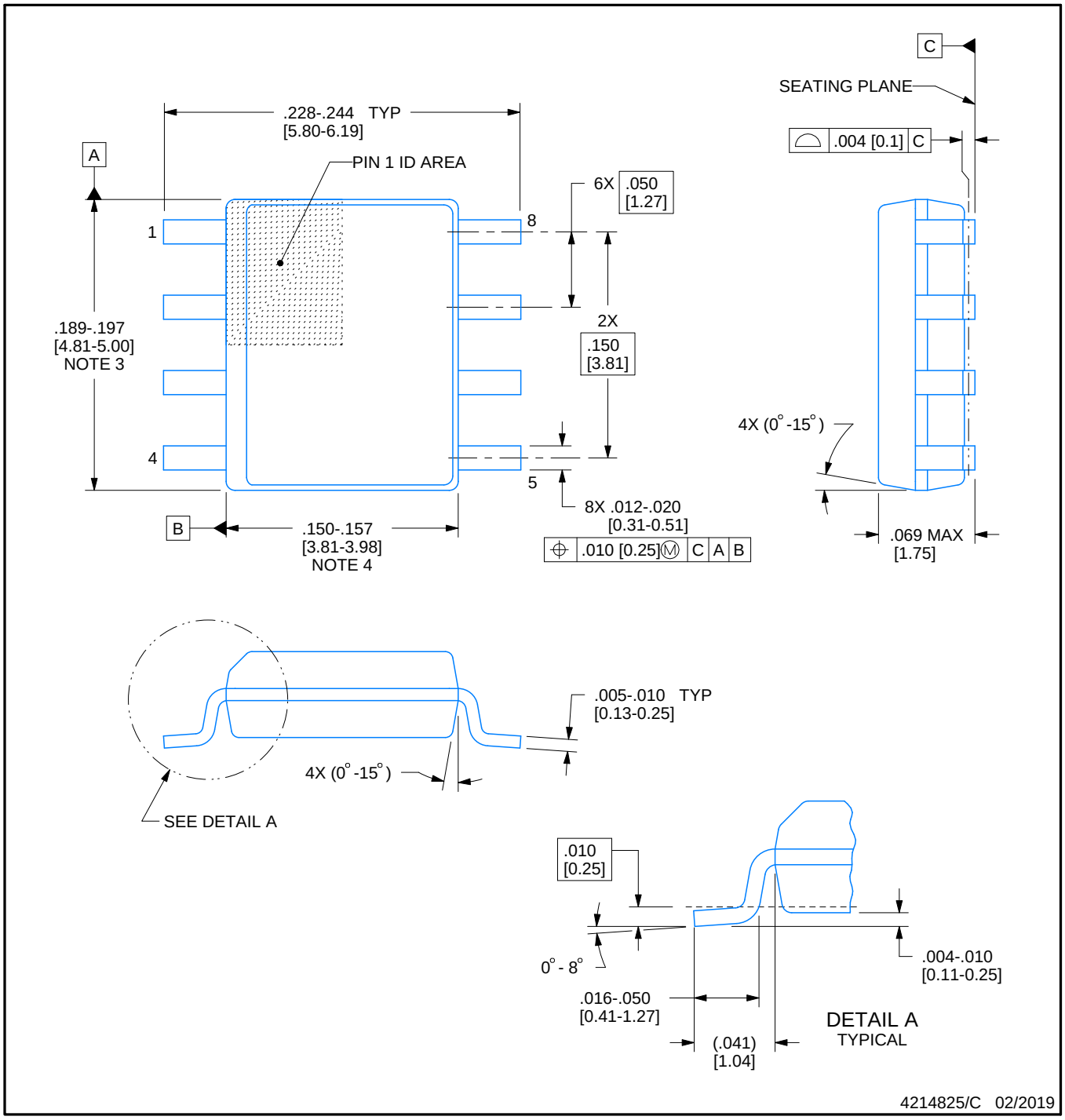

NOTES:

1. Linear dimensions are in inches [millimeters]. Dimensions in parenthesis are for reference only. Controlling dimensions are in inches. Dimensioning and tolerancing per ASME Y14.5M.
2. This drawing is subject to change without notice.
3. This dimension does not include mold flash, protrusions, or gate burrs. Mold flash, protrusions, or gate burrs shall not exceed .006 [0.15] per side.
4. This dimension does not include interlead flash.
5. Reference JEDEC registration MS-012, variation AA.

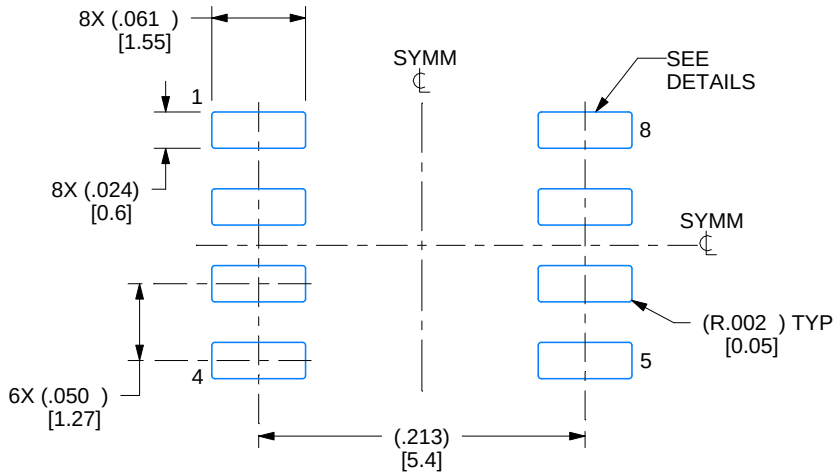

LAND PATTERN EXAMPLE
EXPOSED METAL SHOWN
SCALE:8X

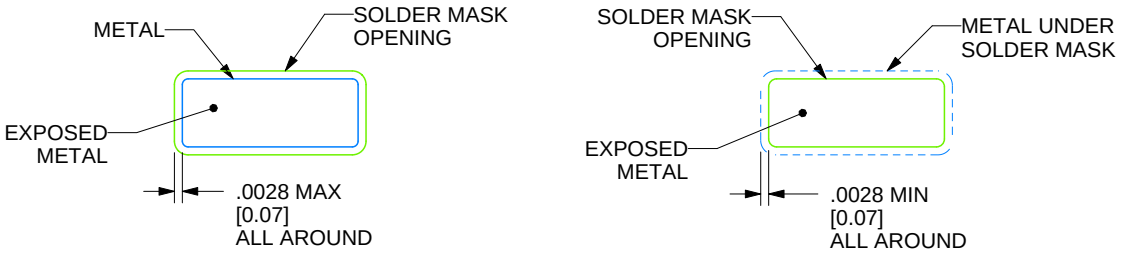

SOLDER MASK DETAILS

4214825/C 02/2019

NOTES: (continued)

6. Publication IPC-7351 may have alternate designs.
7. Solder mask tolerances between and around signal pads can vary based on board fabrication site.

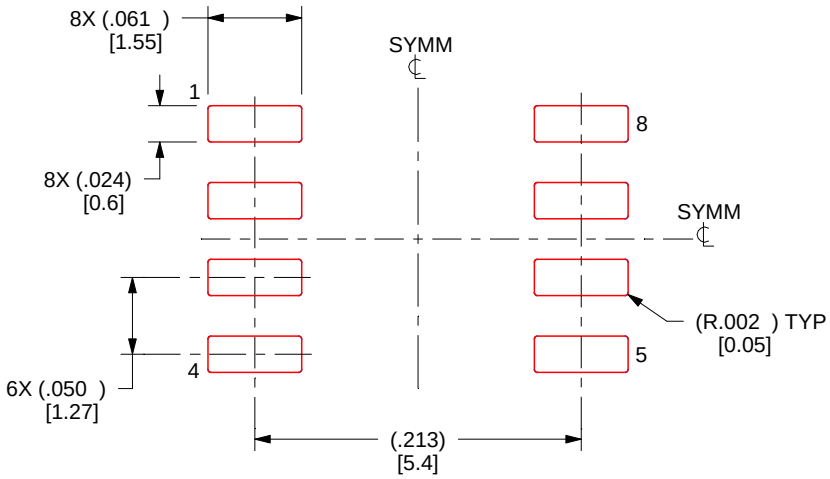

SOLDER PASTE EXAMPLE
BASED ON .005 INCH [0.125 MM] THICK STENCIL
SCALE:8X

4214825/C 02/2019

NOTES: (continued)

8. Laser cutting apertures with trapezoidal walls and rounded corners may offer better paste release. IPC-7525 may have alternate design recommendations.
9. Board assembly site may have different recommendations for stencil design.

IMPORTANT NOTICE AND DISCLAIMER

TI PROVIDES TECHNICAL AND RELIABILITY DATA (INCLUDING DATA SHEETS), DESIGN RESOURCES (INCLUDING REFERENCE DESIGNS), APPLICATION OR OTHER DESIGN ADVICE, WEB TOOLS, SAFETY INFORMATION, AND OTHER RESOURCES “AS IS” AND WITH ALL FAULTS, AND DISCLAIMS ALL WARRANTIES, EXPRESS AND IMPLIED, INCLUDING WITHOUT LIMITATION ANY IMPLIED WARRANTIES OF MERCHANTABILITY, FITNESS FOR A PARTICULAR PURPOSE OR NON-INFRINGEMENT OF THIRD PARTY INTELLECTUAL PROPERTY RIGHTS.

These resources are intended for skilled developers designing with TI products. You are solely responsible for (1) selecting the appropriate TI products for your application, (2) designing, validating and testing your application, and (3) ensuring your application meets applicable standards, and any other safety, security, regulatory or other requirements.

These resources are subject to change without notice. TI grants you permission to use these resources only for development of an application that uses the TI products described in the resource. Other reproduction and display of these resources is prohibited. No license is granted to any other TI intellectual property right or to any third party intellectual property right. TI disclaims responsibility for, and you will fully indemnify TI and its representatives against, any claims, damages, costs, losses, and liabilities arising out of your use of these resources.

TI’s products are provided subject to TI’s Terms of Sale or other applicable terms available either on ti.com or provided in conjunction with such TI products. TI’s provision of these resources does not expand or otherwise alter TI’s applicable warranties or warranty disclaimers for TI products.

TI objects to and rejects any additional or different terms you may have proposed.

Mailing Address: Texas Instruments, Post Office Box 655303, Dallas, Texas 75265
Copyright © 2025, Texas Instruments Incorporated