# MCT8315A High Speed Sensorless Trapezoidal Control Integrated FET BLDC Driver

## 1 Features

- Three-phase BLDC motor driver with integrated sensorless motor control algorithm
  - Code-free high speed Trapezoidal Control
  - Supports up to 3 kHz (electrical frequency)
  - Very fast start-up time (< 50 ms)
  - Fast Deceleration (< 150 ms)
  - Supports 120° or 150° modulation to improve acoustic performance
  - Windmilling support through forward resynchronization and reverse drive
  - Analog, PWM, freq. or $I^2C$ based speed input
  - Active Demagnetization to reduce power losses
  - Configurable motor start-up and stop options
  - Closed speed/power loop options
  - Anti-voltage surge (AVS) protection prevents DC bus voltage spike during motor deceleration
- 4.5- to 35-V operating voltage (40-V abs max)
- High output current capability: 4-A peak
- Low MOSFET on-state resistance
  - $R_{DS(ON)}$ (HS + LS) at $T_A$ = 25°C : 240-mΩ (typ.)
- Low power sleep mode
  - 5-µA (maximum) at $V_{VM}$ = 24-V, $T_A$ = 25°C
- Speed loop accuracy: 3% with internal clock and 1% with external clock reference
- Customer-configurable non-volatile memory (EEPROM) to store device configuration
- Supports up to 100-kHz PWM frequency for low inductance motor support
- Does not require external current sense resistors; uses built-in current sensing
- Built-in 3.3-V, 20-mA LDO regulator
- Built-in 3.3-V/5-V, 170-mA buck regulator
- Dedicated DRVOFF pin to disable (Hi-Z) outputs
- Spread spectrum and slew rate for EMI mitigation
- Suite of integrated protection features
  - Supply under voltage lockout (UVLO)
  - Supply over voltage protection (OVP)
  - Motor lock detection (5 different types)
  - Over current protection (OCP)
  - Thermal warning and shutdown (OTW/TSD)
  - Fault condition indication pin (nFAULT)
  - Optional fault diagnostics over $I^2C$ interface

## 2 Applications

- Brushless-DC (BLDC) Motor Modules
- Robotic Vacuum Suction Motors
- Motor Cycle Fuel Pumps
- Appliance Fans and Pumps
- Automotive Fan and Blowers
- CPAP Machines

## 3 Description

The MCT8315A provides a single-chip, code-free sensorless trapezoidal solution for customers requiring high speed operation (up to 3 kHz electrical) or very fast start-up time (< 50 ms) for 12- to 24-V brushless-DC motors requiring up to 4-A peak current. The MCT8315A integrates three ½-bridges with 40-V absolute maximum capability and a low $R_{DS(ON)}$ of 240 mΩ (high-side + low-side FETs). MCT8315A integrates power management circuits including an voltage-adjustable buck regulator (3.3 V / 5 V, 170-mA) and LDO (3.3 V, 20 mA) that can be used to power external circuits.

Sensorless trapezoidal control is highly configurable (motor start-up/stop behavior, fault handling, closed loop operation) through register settings in a non-volatile EEPROM, which allows the device to operate stand-alone once it has been configured. The MCT8315A receives a speed command through a PWM signal, analog voltage, variable frequency square wave or $I^2C$ instruction. There are a large number of protection features integrated into the MCT8315A to protect the device, motor, and system against fault events.

**Device Information**(1)

| PART NUMBER | PACKAGE | BODY SIZE (NOM) |
|---|---|---|
| MCT8315A1V | VQFN (40) | 7.00 mm × 5.00 mm |

(1) For all available packages, see the orderable addendum at the end of the data sheet.

Documentation for reference:

- Refer MCT8315A tuning guide
- Refer to the MCT8315A EVM GUI

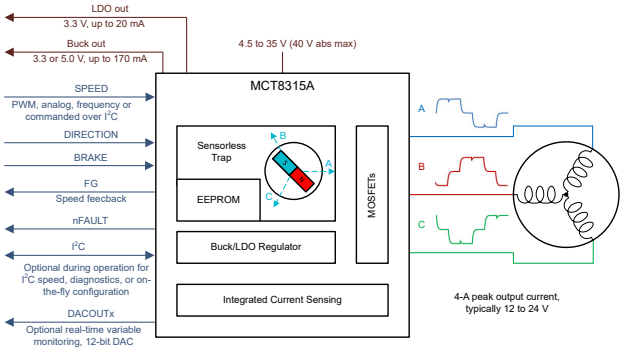


**Simplified Schematic**

An IMPORTANT NOTICE at the end of this data sheet addresses availability, warranty, changes, use in safety-critical applications, intellectual property matters and other important disclaimers. PRODUCTION DATA.

## Table of Contents

**1 Features**....1
**2 Applications**....1
**3 Description**....1
**4 Revision History**....2
**5 Pin Configuration and Functions**....3
**6 Specifications**....5
6.1 Absolute Maximum Ratings....5
6.2 ESD Ratings....5
6.3 Recommended Operating Conditions....5
6.4 Thermal Information....6
6.5 Electrical Characteristics....6
6.6 Characteristics of the SDA and SCL bus for Standard and Fast mode....12
6.7 Typical Characteristics....14
**7 Detailed Description**....15
7.1 Overview....15
7.2 Functional Block Diagram....16
7.3 Feature Description....17
7.4 Device Functional Modes....70
7.5 External Interface....70
7.6 EEPROM access and I$^2$C interface....73
7.7 EEPROM (Non-Volatile) Register Map....79
7.8 RAM (Volatile) Register Map....129
**8 Application and Implementation**....146
8.1 Application Information....146
8.2 Typical Applications....146
**9 Power Supply Recommendations**....154
9.1 Bulk Capacitance....154
**10 Layout**....155
10.1 Layout Guidelines....155
10.2 Layout Example....156
10.3 Thermal Considerations....157
**11 Device and Documentation Support**....158
11.1 Support Resources....158
11.2 Trademarks....158
11.3 Electrostatic Discharge Caution....158
11.4 Glossary....158
**12 Mechanical, Packaging, and Orderable Information**....158
12.1 Tape and Reel Information....158

## 4 Revision History

| Changes from Revision * (December 2022) to Revision A (April 2023) | Page |
|---|---|
| • Updated I$^2$C Data Word section to clarify default I$^2$C Target ID | 74 |
| • Updated CRC Byte Calculation section with CRC initial value | 78 |


Copyright © 2023 Texas Instruments Incorporated

## 5 Pin Configuration and Functions

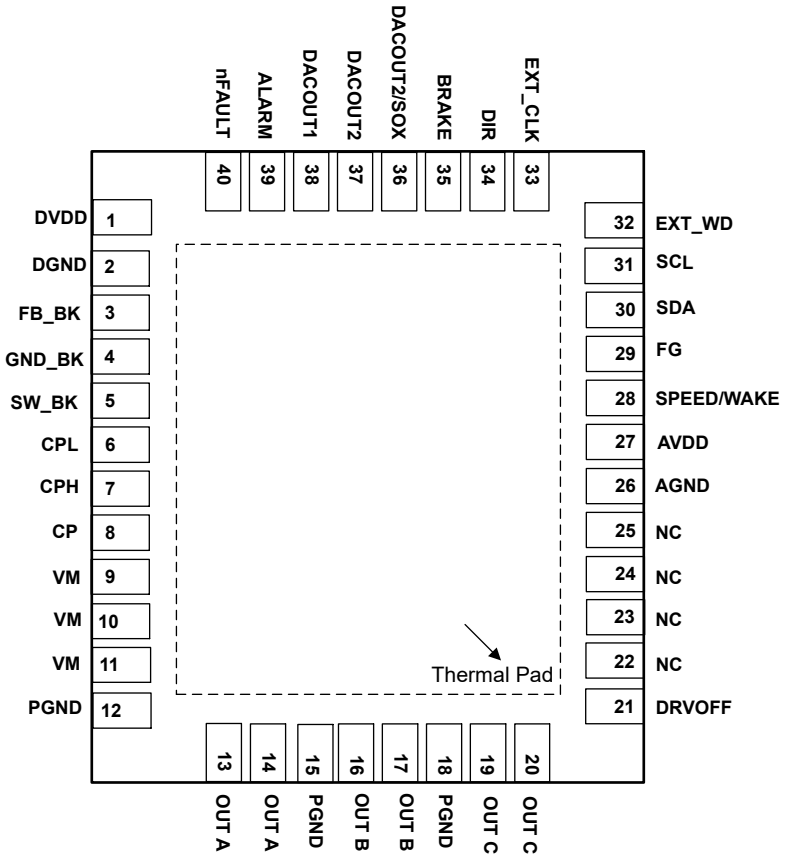


**Figure 5-1. MCT8315A, 40-Pin VQFN With Exposed Thermal Pad, Top View**

**Table 5-1. Pin Functions**

| PIN | 40-pin Package | TYPE[(1)] | DESCRIPTION |
|---|---|---|---|
| NAME | MCT8315A | | |
| AGND | 26 | GND | Device analog ground. Refer Layout Guidelines for connection recommendation. |
| ALARM | 39 | O | Alarm signal : push-pull output. Pulled logic high during fault condition, if enabled.<br>If ALARM pin is not used, leave it floating. |
| AVDD | 27 | PWR O | 3.3-V internal regulator output. Connect a X5R or X7R, 1-µF, 6.3-V ceramic capacitor between the AVDD and AGND pins. This regulator can source up to 20 mA for external circuits. |
| BRAKE | 35 | I | High → brake the motor<br>Low → normal operation<br>If BRAKE pin is not used, connect to AGND directly.<br>If BRAKE pin is used to brake the motor, use an external 100-kΩ pull-down resistor (to AGND). |
| CP | 8 | PWR | Charge pump output. Connect a X5R or X7R, 1-µF, 16-V ceramic capacitor between the CP and VM pins. |
| CPH | 7 | PWR | Charge pump switching node. Connect a X5R or X7R, 47-nF, ceramic capacitor between the CPH and CPL pins. TI recommends a capacitor voltage rating at least twice the normal operating voltage of the device. |
| CPL | 6 | PWR | |
| DACOUT1 | 38 | O | DAC output DACOUT1 |
| DACOUT2 | 37 | O | DAC output DACOUT2 |
| DACOUT2/SOX | 36 | O | Multi-purpose pin:<br>DAC output when configured as DACOUT2<br>CSA output when configured as SOX |

Copyright © 2023 Texas Instruments Incorporated

**Table 5-1. Pin Functions (continued)**

| PIN | 40-pin Package | TYPE[(1)] | DESCRIPTION |
|---|---|---|---|
| NAME | MCT8315A | | |
| DGND | 2 | GND | Device digital ground. Refer Layout Guidelines for connection recommendation. |
| DIR | 34 | I | Direction of motor spinning;<br>When low, phase driving sequence is OUT A → OUT B → OUT C<br>When high, phase driving sequence is OUT A → OUT C → OUT B<br>If DIR pin is not used, connect to AGND or AVDD directly (depending on phase driving sequence needed).<br>If DIR pin is used for changing motor spin direction, use an external 100-kΩ pull-down resistor (to AGND). |
| DRVOFF | 21 | I | Coast (Hi-Z) all six MOSFETs. |
| DVDD | 1 | PWR | 1.5-V internal regulator output. Connect a X5R or X7R, 2.2-µF, 6.3-V ceramic capacitor between the DVDD and DGND pins. |
| EXT_CLK | 33 | I | External clock reference input in external clock reference mode. |
| EXT_WD | 32 | I | External watchdog input. |
| FB_BK | 3 | PWR I/O | Feedback for buck regulator. Connect to buck regulator output after the inductor/resistor. |
| FG | 29 | O | Motor speed indicator : open-drain output; requires an external pull-up resistor to 1.8-V to 5.0-V. |
| GND_BK | 4 | GND | Buck regulator ground. Refer Layout Guidelines for connection recommendation. |
| NC | 22, 23, 24, 25 | - | No connection. Leave these pins floating. |
| nFAULT | 40 | O | Fault indicator: open drain output. Pulled logic low during fault condition; requires an external pull-up resistor to 1.8-V to 5.0-V. |
| OUTA | 13, 14 | PWR O | Half-bridge output A |
| OUTB | 16, 17 | PWR O | Half-bridge output B |
| OUTC | 19, 20 | PWR O | Half-bridge output C |
| PGND | 12, 15, 18 | GND | Device power ground. Refer Layout Guidelines for connection recommendation. |
| SCL | 31 | I | $I^2C$ clock input |
| SDA | 30 | I/O | $I^2C$ data line |
| SPEED/ WAKE | 28 | I | Device speed input; supports analog, frequency or PWM signals. The speed pin input can be configured through SPD_CTRL_MODE. |
| SW_BK | 5 | PWR | Buck switch node. Connect this pin to an inductor or resistor. |
| VM | 9, 10, 11 | PWR I | Device and motor power supply. Connect to motor supply voltage; bypass to PGND with a 0.1-µF capacitor plus one bulk capacitor. TI recommends a capacitor voltage rating at least twice the normal operating voltage of the device. |
| Thermal pad | | GND | Connect to AGND |

(1) I = input, O = output, GND = ground, PWR = power, NC = no connect


Copyright © 2023 Texas Instruments Incorporated

# 6 Specifications

## 6.1 Absolute Maximum Ratings

over operating ambient temperature range (unless otherwise noted)[1]

| | MIN | MAX | UNIT |
|---|---|---|---|
| Power supply pin voltage (VM) | –0.3 | 40 | V |
| Voltage difference between ground pins (GND_BK, DGND, PGND, AGND) | –0.3 | 0.3 | V |
| Charge pump voltage (CPH, CP) | –0.3 | $V_{VM}$ + 6 | V |
| Charge pump negative switching pin voltage (CPL) | –0.3 | $V_{VM}$ +0.3 | V |
| Switching node pin voltage (SW_BK) | –0.3 | $V_{VM}$ +0.3 | V |
| Analog regulators pin voltage (AVDD) | –0.3 | 4 | V |
| Analog regulators pin voltage (DVDD) | –0.3 | 1.7 | V |
| Logic pin input voltage (BRAKE, DRVOFF, DIR, EXT_CLK, EXT_WD, SCL, SDA, SPEED) | –0.3 | 6 | V |
| Open drain pin output voltage (nFAULT, FG) | –0.3 | 6 | V |
| Output pin voltage (OUTA, OUTB, OUTC) | –1 | $V_{VM}$ + 1 | V |
| Ambient temperature, $T_A$ | –40 | 125 | °C |
| Junction temperature, $T_J$ | –40 | 150 | °C |
| Storage tempertaure, $T_{stg}$ | –65 | 150 | °C |

(1) Operation outside the Absolute Maximum Ratings may cause permanent device damage. Absolute Maximum Ratings do not imply functional operation of the device at these or any other conditions beyond those listed under Recommended Operating Conditions. If used outside the Recommended Operating Conditions but within the Absolute Maximum Ratings, the device may not be fully functional, and this may affect device reliability, functionality, performance, and shorten the device lifetime

## 6.2 ESD Ratings

| | | | VALUE | UNIT |
|---|---|---|---|---|
| $V_{(ESD)}$ | Electrostatic discharge | Human body model (HBM), per ANSI/ESDA/JEDEC JS-001[1] | ±2000 | V |
| | | Charged device model (CDM), per JEDEC specification JS-002[(2)] | ±750 | |

(1) JEDEC document JEP155 states that 500-V HBM allows safe manufacturing with a standard ESD control process.
(2) JEDEC document JEP157 states that 250-V CDM allows safe manufacturing with a standard ESD control process.

## 6.3 Recommended Operating Conditions

over operating ambient temperature range (unless otherwise noted)

| | | | MIN | NOM | MAX | UNIT |
|---|---|---|---|---|---|---|
| $V_{VM}$ | Power supply voltage | $V_{VM}$ | 4.5 | 24 | 35 | V |
| $I_{OUT}$ [1] | Peak output winding current | OUTA, OUTB, OUTC | | | 4 | A |
| $V_{IN_LOGIC}$ | Logic input voltage | BRAKE, DRVOFF, DIR, EXT_CLK, EXT_WD, SPEED, SDA, SCL | –0.1 | | 5.5 | V |
| $V_{OD}$ | Open drain pullup voltage | nFAULT, FG | –0.1 | | 5.5 | V |
| $I_{OD}$ | Open drain output current capability | nFAULT, FG | | | 5 | mA |
| $T_A$ | Operating ambient temperature | | –40 | | 125 | °C |
| $T_J$ | Operating junction temperature | | –40 | | 150 | °C |

(1) Power dissipation and thermal limits must be observed

Copyright © 2023 Texas Instruments Incorporated

## 6.4 Thermal Information

| THERMAL METRIC[1] | | MCT8315A RGF (VQFN) 40 Pins | UNIT |
|---|---|---|---|
| $R_{\theta JA}$ | Junction-to-ambient thermal resistance | 28 | °C/W |
| $R_{\theta JC(top)}$ | Junction-to-case (top) thermal resistance | 16.7 | °C/W |
| $R_{\theta JB}$ | Junction-to-board thermal resistance | 8.9 | °C/W |
| $\Psi_{JT}$ | Junction-to-top characterization parameter | 1.8 | °C/W |
| $\Psi_{JB}$ | Junction-to-board characterization parameter | 8.9 | °C/W |
| $R_{\theta JC(bot)}$ | Junction-to-case (bottom) thermal resistance | 3.5 | °C/W |

(1) For more information about traditional and new thermal metrics, see the Semiconductor and IC Package Thermal Metrics application report.

## 6.5 Electrical Characteristics

$T_J$ = –40°C to +150°C, $V_{VM}$ = 4.5 to 35 V (unless otherwise noted). Typical limits apply for $T_A$ = 25°C, $V_{VM}$ = 24 V

| PARAMETER | | TEST CONDITIONS | MIN | TYP | MAX | UNIT |
|---|---|---|---|---|---|---|
| **POWER SUPPLIES** | | | | | | |
| $I_{VMQ}$ | VM sleep mode current | $V_{VM}$ > 6 V, $V_{SPEED}$ = 0, $T_A$ = 25 °C | | 3 | 5 | µA |
| | | $V_{SPEED}$ = 0, $T_A$ = 125 °C | | 3.5 | 7 | µA |
| $I_{VMS}$ | VM standby mode current | $V_{VM}$ ≥ 12 V, Standby Mode, DRVOFF = High, $T_A$ = 25 °C, $L_{BK}$ = 47 uH, $C_{BK}$ = 22 µF | | 8 | 16 | mA |
| | | $V_{VM}$ > 6 V, Standby Mode, DRVOFF = High, $T_A$ = 25 °C, $R_{BK}$ = 22 Ω, $C_{BK}$ = 22 µF | | 25 | 29 | mA |
| | | $V_{VM}$ ≥ 12 V, Standby Mode, DRVOFF = High, $L_{BK}$ = 47 uH, $C_{BK}$ = 22 µF | | 8 | 16.5 | mA |
| | | $V_{VM}$ > 6 V, Standby Mode, DRVOFF = High, $R_{BK}$ = 22 Ω, $C_{BK}$ = 22 µF | | 25 | 29 | mA |
| $I_{VM}$ | VM operating mode current | $V_{VM}$ > 6 V, $V_{SPEED}$ > $V_{EX_SL}$, PWM_FREQ_OUT = 10000b (25 kHz), $T_A$ = 25 °C, $L_{BK}$ = 47 uH, $C_{BK}$ = 22 µF, No Motor Connected | | 11 | 18 | mA |
| | | $V_{VM}$ > 6 V, $V_{SPEED}$ > $V_{EX_SL}$, PWM_FREQ_OUT = 10000b (25 kHz), $T_A$ = 25 °C, $R_{BK}$ = 22 Ω, $C_{BK}$ = 22 µF, No Motor Connected | | 27 | 30.5 | mA |
| | | $V_{VM}$ > 6 V, $V_{SPEED}$ > $V_{EX_SL}$, PWM_FREQ_OUT = 10000b (25 kHz), $L_{BK}$ = 47 uH, $C_{BK}$ = 22 µF, No Motor Connected | | 11 | 17 | mA |
| | | $V_{VM}$ > 6 V, $V_{SPEED}$ > $V_{EX_SL}$, PWM_FREQ_OUT = 10000b (25 kHz), $R_{BK}$ = 22 Ω, $C_{BK}$ = 22 µF, No Motor Connected | | 28 | 30.5 | mA |
| $V_{AVDD}$ | Analog regulator voltage | 0 mA ≤ $I_{AVDD}$ ≤ 20 mA | 3.125 | 3.3 | 3.465 | V |
| $I_{AVDD}$ | External analog regulator load | | | | 20 | mA |
| $V_{DVDD}$ | Digital regulator voltage | | 1.4 | 1.55 | 1.65 | V |
| $V_{VCP}$ | Charge pump regulator voltage | VCP with respect to VM | 4.0 | 4.7 | 5.5 | V |


Copyright © 2023 Texas Instruments Incorporated

$T_J$ = –40°C to +150°C, $V_{VM}$ = 4.5 to 35 V (unless otherwise noted). Typical limits apply for $T_A$ = 25°C, $V_{VM}$ = 24 V

| PARAMETER | | TEST CONDITIONS | MIN | TYP | MAX | UNIT |
|---|---|---|---|---|---|---|
| **BUCK REGULATOR** | | | | | | |
| $V_{BK}$ | Buck regulator average voltage ($L_{BK}$ = 47 µH, $C_{BK}$ = 22 µF) | $V_{VM}$ > 6 V, 0 mA ≤ $I_{BK}$ ≤ 170 mA, BUCK_SEL = 00b | 3.1 | 3.3 | 3.5 | V |
| | | $V_{VM}$ > 6 V, 0 mA ≤ $I_{BK}$ ≤ 170 mA, BUCK_SEL = 01b | 4.6 | 5.0 | 5.4 | V |
| | | $V_{VM}$ > 6 V, 0 mA ≤ $I_{BK}$ ≤ 170 mA, BUCK_SEL = 10b | 3.7 | 4.0 | 4.3 | V |
| | | $V_{VM}$ > 6.7 V, 0 mA ≤ $I_{BK}$ ≤ 170 mA, BUCK_SEL = 11b | 5.2 | 5.7 | 6.2 | V |
| | | $V_{VM}$ < 6.0 V (BUCK_SEL = 00b, 01b, 10b, 11b), 0 mA ≤ $I_{BK}$ ≤ 170 mA | | $V_{VM}$– $I_{BK}$*($R_{LBK}$ +2) (1) | | V |
| $V_{BK}$ | Buck regulator average voltage ($L_{BK}$ = 22 µH, $C_{BK}$ = 22 µF) | $V_{VM}$ > 6 V, 0 mA ≤ $I_{BK}$ ≤ 20 mA, BUCK_SEL = 00b | 3.1 | 3.3 | 3.5 | V |
| | | $V_{VM}$ > 6 V, 0 mA ≤ $I_{BK}$ ≤ 20 mA, BUCK_SEL = 01b | 4.6 | 5.0 | 5.4 | V |
| | | $V_{VM}$ > 6 V, 0 mA ≤ $I_{BK}$ ≤ 20 mA, BUCK_SEL = 10b | 3.7 | 4.0 | 4.3 | V |
| | | $V_{VM}$ > 6.7 V, 0 mA ≤ $I_{BK}$ ≤ 20 mA, BUCK_SEL = 11b | 5.2 | 5.7 | 6.2 | V |
| | | $V_{VM}$ < 6.0 V (BUCK_SEL = 00b, 01b, 10b, 11b), 0 mA ≤ $I_{BK}$ ≤ 20 mA | | $V_{VM}$– $I_{BK}$*($R_{LBK}$ +2)(1) | | V |
| $V_{BK}$ | Buck regulator average voltage ($R_{BK}$ = 22 Ω, $C_{BK}$ = 22 µF) | $V_{VM}$ > 6 V, 0 mA ≤ $I_{BK}$ ≤ 10 mA, BUCK_SEL = 00b | 3.1 | 3.3 | 3.5 | V |
| | | $V_{VM}$ > 6 V, 0 mA ≤ $I_{BK}$ ≤ 10 mA, BUCK_SEL = 01b | 4.6 | 5.0 | 5.4 | V |
| | | $V_{VM}$ > 6 V, 0 mA ≤ $I_{BK}$ ≤ 10 mA, BUCK_SEL = 10b | 3.7 | 4.0 | 4.3 | V |
| | | $V_{VM}$ > 6.7 V, 0 mA ≤ $I_{BK}$ ≤ 10 mA, BUCK_SEL = 11b | 5.2 | 5.7 | 6.2 | V |
| | | $V_{VM}$ < 6.0 V (BUCK_SEL = 00b, 01b, 10b, 11b), 0 mA ≤ $I_{BK}$ ≤ 10 mA | | $V_{VM}$– $I_{BK}$*($R_{BK}$ +2) | | V |
| $V_{BK_RIP}$ | Buck regulator ripple voltage | $V_{VM}$ > 6 V, 0 mA ≤ $I_{BK}$ ≤ 170 mA, Buck regulator with inductor, $L_{BK}$ = 47 uH, $C_{BK}$ = 22 µF | –100 | | 100 | mV |
| | | $V_{VM}$ > 6 V, 0 mA ≤ $I_{BK}$ ≤ 20 mA, Buck regulator with inductor, $L_{BK}$ = 22 uH, $C_{BK}$ = 22 µF | –100 | | 100 | mV |
| | | $V_{VM}$ > 6 V, 0 mA ≤ $I_{BK}$ ≤ 10 mA, Buck regulator with resistor; $R_{BK}$ = 22 Ω, $C_{BK}$ = 22 µF | –100 | | 100 | mV |
| $I_{BK}$ | External buck regulator load | $L_{BK}$ = 47 uH, $C_{BK}$ = 22 µF, BUCK_PS_DIS = 1b | | | 170 | mA |
| | | $L_{BK}$ = 47 uH, $C_{BK}$ = 22 µF, BUCK_PS_DIS = 0b | | | 170 – $I_{AVDD}$ | mA |
| | | $L_{BK}$ = 22 uH, $C_{BK}$ = 22 µF, BUCK_PS_DIS = 1b | | | 20 | mA |
| | | $L_{BK}$ = 22 uH, $C_{BK}$ = 22 µF, BUCK_PS_DIS = 0b | | | 20 – $I_{AVDD}$ | mA |
| | | $R_{BK}$ = 22 Ω, $C_{BK}$ = 22 µF, BUCK_PS_DIS = 1b | | | 10 | mA |
| | | $R_{BK}$ = 22 Ω, $C_{BK}$ = 22 µF, BUCK_PS_DIS = 0b | | | 10 – $I_{AVDD}$ | mA |

Copyright © 2023 Texas Instruments Incorporated

$T_J$ = –40°C to +150°C, $V_{VM}$ = 4.5 to 35 V (unless otherwise noted). Typical limits apply for $T_A$ = 25°C, $V_{VM}$ = 24 V

| PARAMETER | | TEST CONDITIONS | MIN | TYP | MAX | UNIT |
|---|---|---|---|---|---|---|
| $f_{SW_BK}$ | Buck regulator switching frequency | Regulation Mode | 20 | | 535 | kHz |
| | | Linear Mode | 20 | | 535 | kHz |
| $V_{BK_UV}$ | Buck regulator undervoltage lockout | $V_{BK}$ rising, BUCK_SEL = 00b | 2.7 | 2.8 | 2.95 | V |
| | | $V_{BK}$ falling, BUCK_SEL = 00b | 2.5 | 2.6 | 2.7 | V |
| | | $V_{BK}$ rising, BUCK_SEL = 01b | 4.3 | 4.4 | 4.55 | V |
| | | $V_{BK}$ falling, BUCK_SEL = 01b | 4.1 | 4.2 | 4.36 | V |
| | | $V_{BK}$ rising, BUCK_SEL = 10b | 2.7 | 2.8 | 2.95 | V |
| | | $V_{BK}$ falling, BUCK_SEL = 10b | 2.5 | 2.6 | 2.7 | V |
| | | $V_{BK}$ rising, BUCK_SEL = 11b | 4.3 | 4.4 | 4.55 | V |
| | | $V_{BK}$ falling, BUCK_SEL = 11b | 4.1 | 4.2 | 4.36 | V |
| $V_{BK_UV_HYS}$ | Buck regulator undervoltage lockout hysteresis | Rising to falling threshold, BUCK_SEL = 00b | 90 | 200 | 400 | mV |
| | | Rising to falling threshold, BUCK_SEL = 01b | 90 | 200 | 400 | mV |
| | | Rising to falling threshold, BUCK_SEL = 10b | 90 | 200 | 400 | mV |
| | | Rising to falling threshold, BUCK_SEL =11b | 90 | 200 | 400 | mV |
| $I_{BK_CL}$ | Buck regulator current limit threshold | BUCK_CL = 0b | 360 | 600 | 910 | mA |
| | | BUCK_CL = 1b | 80 | 150 | 250 | mA |
| $I_{BK_OCP}$ | Buck regulator over current protection trip point | | 2 | 3 | 4 | A |
| $t_{BK_RETRY}$ | Over current protection retry time | | 0.7 | 1 | 1.3 | ms |
| **DRIVER OUTPUTS** | | | | | | |
| $R_{DS(ON)}$ | Total MOSFET on resistance (High-side + Low-side) | $V_{VM}$ > 6 V, $I_{OUT}$ = 1 A, $T_A$ = 25°C | | 240 | 260 | mΩ |
| | | $V_{VM}$ < 6 V, $I_{OUT}$ = 1 A, $T_A$ = 25°C | | 250 | 270 | mΩ |
| | | $V_{VM}$ > 6 V, $I_{OUT}$ = 1 A, $T_J$ = 150 °C | | 360 | 400 | mΩ |
| | | $V_{VM}$ < 6 V, $I_{OUT}$ = 1 A, $T_J$ = 150 °C | | 370 | 415 | mΩ |
| SR | Phase pin slew rate switching low to high (Rising from 20 % to 80 %) | $V_{VM}$ = 24 V, SLEW_RATE = 00b | 13 | 25 | 45 | V/µs |
| | | $V_{VM}$ = 24 V, SLEW_RATE = 01b | 30 | 50 | 80 | V/µs |
| | | $V_{VM}$ = 24 V, SLEW_RATE = 10b | 80 | 125 | 185 | V/µs |
| | | $V_{VM}$ = 24 V, SLEW_RATE = 11b | 130 | 200 | 280 | V/µs |
| SR | Phase pin slew rate switching high to low (Falling from 80 % to 20 %) | $V_{VM}$ = 24 V, SLEW_RATE = 00b | 14 | 25 | 45 | V/µs |
| | | $V_{VM}$ = 24 V, SLEW_RATE = 01b | 30 | 50 | 80 | V/µs |
| | | $V_{VM}$ = 24 V, SLEW_RATE = 10b | 80 | 125 | 185 | V/µs |
| | | $V_{VM}$ = 24 V, SLEW_RATE = 11b | 110 | 200 | 280 | V/µs |
| $t_{DEAD}$ | Output dead time (high to low / low to high) | $V_{VM}$ = 24 V, SR = 25 V/µs | | 1800 | 3000 | ns |
| | | $V_{VM}$ = 24 V, SR = 50 V/µs | | 1100 | 1400 | ns |
| | | $V_{VM}$ = 24 V, SR = 125 V/µs | | 650 | 850 | ns |
| | | $V_{VM}$ = 24 V, SR = 200 V/µs | | 500 | 550 | ns |
| **SPEED INPUT - PWM MODE** | | | | | | |
| $f_{PWM}$ | PWM input frequency | | 0.01 | | 100 | kHz |


Copyright © 2023 Texas Instruments Incorporated

$T_J$ = –40°C to +150°C, $V_{VM}$ = 4.5 to 35 V (unless otherwise noted). Typical limits apply for $T_A$ = 25°C, $V_{VM}$ = 24 V

| PARAMETER | | TEST CONDITIONS | MIN | TYP | MAX | UNIT |
|---|---|---|---|---|---|---|
| $Res_{PWM}$ | PWM input resolution | $f_{PWM}$ = 0.01 to 0.35 kHz | 11 | 12 | 13 | bits |
| | | $f_{PWM}$ = 0.35 to 2 kHz | 11 | 13 | 14 | bits |
| | | $f_{PWM}$ = 2 to 3.5 kHz | 11 | 11.5 | 12 | bits |
| | | $f_{PWM}$ = 3.5 to 7 kHz | 12 | 13 | 13.5 | bits |
| | | $f_{PWM}$ = 7 to 14 kHz | 11 | 12 | 12.5 | bits |
| | | $f_{PWM}$ = 14 to 29.2 kHz | 10 | 11.5 | 12 | bits |
| | | $f_{PWM}$ = 29.3 to 60 kHz | 9 | 10.5 | 11 | bits |
| | | $f_{PWM}$ = 60 to 100 kHz | 8 | 9 | 10 | bits |
| **SPEED INPUT - ANALOG MODE** | | | | | | |
| $V_{ANA_FS}$ | Analog full-speed voltage | | 2.95 | 3 | 3.05 | V |
| $V_{ANA_RES}$ | Analog voltage resolution | | | 732 | | µV |
| **SPEED INPUT - FREQUENCY MODE** | | | | | | |
| $f_{PWM_FREQ}$ | PWM input frequency range | Duty cycle = 50% | 3 | | 32767 | Hz |
| **SLEEP MODE** | | | | | | |
| $V_{EN_SL}$ | Analog voltage to enter sleep mode | SPD_CTRL_MODE = 00b (analog mode) | | | 40 | mV |
| $V_{EX_SL}$ | Analog voltage to exit sleep mode | SPD_CTRL_MODE = 00b (analog mode) | 2.2 | | | V |
| $t_{DET_ANA}$ | Time needed to detect wake up signal on SPEED pin | SPD_CTRL_MODE = 00b (analog mode)<br>$V_{SPEED} > V_{EX_SL}$ | 0.5 | 1 | 1.5 | µs |
| $t_{WAKE}$ | Wakeup time from sleep mode | $V_{SPEED} > V_{EX_SL}$ to DVDD voltage available, SPD_CTRL_MODE = 00b (analog mode) | | 3 | 5 | ms |
| $t_{EX_SL_DR_ANA}$ | Time taken to drive motor after exiting from sleep state | SPD_CTRL_MODE = 00b (analog mode)<br>$V_{SPEED} > V_{EX_SL}$, ISD detection disabled | | | 30 | ms |
| $t_{DET_PWM}$ | Time needed to detect wake up signal on SPEED pin | SPD_CTRL_MODE = 01b (PWM mode), $V_{SPEED} > V_{IH}$ | 0.5 | 1 | 1.5 | µs |
| $t_{WAKE_PWM}$ | Wakeup time from sleep mode | $V_{SPEED} > V_{IH}$ to DVDD voltage available, SPD_CTRL_MODE = 01b (PWM mode) or 11b (Frequency mode) | | 3 | 5 | ms |
| $t_{EX_SL_DR_PWM}$ | Time taken to drive motor after wakeup from sleep state | SPD_CTRL_MODE = 01b (PWM mode)<br>$V_{SPEED} > V_{IH}$, ISD detection disabled | | | 30 | ms |
| $t_{DET_SL_ANA}$ | Time needed to detect sleep command, analog mode | SPD_CTRL_MODE = 00b (analog mode) $V_{SPEED} < V_{EN_SL}$, SLEEP_TIME = 00b or 01b | 0.5 | 1 | 2 | ms |
| | | SPD_CTRL_MODE = 00b (analog mode) $V_{SPEED} < V_{EN_SL}$, SLEEP_TIME = 10b | 14 | 20 | 26 | ms |
| | | SPD_CTRL_MODE = 00b (analog mode) $V_{SPEED} < V_{EN_SL}$, SLEEP_TIME = 11b | 140 | 200 | 260 | ms |

Copyright © 2023 Texas Instruments Incorporated

$T_J$ = –40°C to +150°C, $V_{VM}$ = 4.5 to 35 V (unless otherwise noted). Typical limits apply for $T_A$ = 25°C, $V_{VM}$ = 24 V

| PARAMETER | | TEST CONDITIONS | MIN | TYP | MAX | UNIT |
|---|---|---|---|---|---|---|
| $t_{DET_SL_PWM}$ | Time needed to detect sleep command, PWM or frequency mode | SPD_CTRL_MODE = 01b (PWM mode) or 11b (Frequency mode), $V_{SPEED}$ < $V_{IL}$, SLEEP_TIME = 00b | 0.035 | 0.05 | 0.065 | ms |
| | | SPD_CTRL_MODE = 01b (PWM mode) or 11b (Frequency mode), $V_{SPEED}$ < $V_{IL}$, SLEEP_TIME = 01b | 0.14 | 0.2 | 0.26 | ms |
| | | SPD_CTRL_MODE = 01b (PWM mode) or 11b (Frequency mode), $V_{SPEED}$ < $V_{IL}$, SLEEP_TIME = 10b | 14 | 20 | 26 | ms |
| | | SPD_CTRL_MODE = 01b (PWM mode) or 11b (Frequency mode), $V_{SPEED}$ < $V_{IL}$, SLEEP_TIME = 11b | 140 | 200 | 260 | ms |
| $t_{EN_SL}$ | Time needed to stop driving motor after detecting sleep command | $V_{SPEED}$ < $V_{EN_SL}$ (analog mode) or $V_{SPEED}$ < $V_{IL}$ (PWM mode) (and SPEED_CTRL = 0 ($I^2C$ mode)) | | 1 | 2 | ms |
| **STANDBY MODE** | | | | | | |
| $t_{EX_SB_DR_ANA}$ | Time taken to drive motor after exiting standby mode, analog mode | SPD_CTRL_MODE = 00b (analog mode), $V_{SPEED}$ > $V_{EX_SB}$, ISD detection disabled | | | 6 | ms |
| $t_{EX_SB_DR_PWM}$ | Time taken to drive motor after exiting standby mode, PWM mode | SPD_CTRL_MODE = 01b (PWM mode) $V_{SPEED}$ > $V_{IH}$, ISD detection disabled | | | 6 | ms |
| $t_{DET_SB_ANA}$ | Time needed to detect standby mode, analog mode | SPD_CTRL_MODE = 00b (analog mode), $V_{SPEED}$ < $V_{EN_SB}$ | 0.5 | 1 | 2 | ms |
| $t_{DET_SB_PWM}$ | Time needed to detect standby command, PWM/ mode | SPD_CTRL_MODE = 01b (PWM mode), $V_{SPEED}$ < $V_{IL}$, SLEEP_TIME = 00b | 0.035 | 0.05 | 0.065 | ms |
| | | SPD_CTRL_MODE = 01b (PWM mode), $V_{SPEED}$ < $V_{IL}$, SLEEP_TIME = 01b | 0.14 | 0.2 | 0.26 | ms |
| | | SPD_CTRL_MODE = 01b (PWM mode), $V_{SPEED}$ < $V_{IL}$, SLEEP_TIME = 10b | 14 | 20 | 26 | ms |
| | | SPD_CTRL_MODE = 01b (PWM mode), $V_{SPEED}$ < $V_{IL}$, SLEEP_TIME = 11b | 140 | 200 | 260 | ms |
| $t_{DET_SB_FREQ}$ | Time needed to detect standby mode, Frequency mode | SPD_CTRL_MODE = 11b (Frequency mode), $V_{SPEED}$ < $V_{IL}$ | | 4000 | | ms |
| $t_{DET_SB_DIG}$ | Time needed to detect standby mode, $I^2C$ mode | SPD_CTRL_MODE = 10b ($I^2C$ mode), SPEED_CTRL = 0b | | 1 | 2 | ms |
| $t_{EN_SB}$ | Time needed to stop driving motor after detecting standby command | All speed input modes | | 1 | 2 | ms |
| **LOGIC-LEVEL INPUTS (BRAKE, DIR, EXT_CLK, EXT_WD, SPEED)** | | | | | | |
| $V_{IL}$ | Input logic low voltage | AVDD = 3 to 3.6 V | | | 0.25*AVDD | V |
| $V_{IH}$ | Input logic high voltage | AVDD = 3 to 3.6 V | 0.65*AVDD | | | V |
| $V_{HYS}$ | Input hysteresis | | 50 | 500 | 800 | mV |
| $I_{IL}$ | Input logic low current | AVDD = 3 to 3.6 V | -0.15 | | 0.15 | µA |
| $I_{IH}$ | Input logic high current | AVDD = 3 to 3.6 V | -0.3 | | 0 | µA |
| $R_{PD_SPEED}$ | Input pulldown resistance | SPEED pin To GND | 0.6 | 1 | 1.4 | MΩ |
| **OPEN-DRAIN OUTPUTS (nFAULT, FG)** | | | | | | |
| $V_{OL}$ | Output logic low voltage | $I_{OD}$ = -5 mA | | | 0.4 | V |
| $I_{OZ}$ | Output logic high current | $V_{OD}$ = 3.3 V | 0 | | 0.5 | µA |
| **$I^2C$ Serial Interface** | | | | | | |
| $V_{I2C_L}$ | Input logic low voltage | | -0.5 | | 0.3*AVDD | V |


Copyright © 2023 Texas Instruments Incorporated

$T_J$ = –40°C to +150°C, $V_{VM}$ = 4.5 to 35 V (unless otherwise noted). Typical limits apply for $T_A$ = 25°C, $V_{VM}$ = 24 V

| PARAMETER | | TEST CONDITIONS | MIN | TYP | MAX | UNIT |
|---|---|---|---|---|---|---|
| $V_{I2C_H}$ | Input logic high voltage | | 0.7*AVDD | | 5.5 | V |
| $V_{I2C_HYS}$ | Hysteresis | | 0.05*AVDD | | | V |
| $V_{I2C_OL}$ | Output logic low voltage | Open-drain at 2mA sink current | 0 | | 0.4 | V |
| $I_{I2C_OL}$ | Output logic low current | $V_{I2C_OL}$ = 0.6V | | | 6 | mA |
| $I_{I2C_IL}$ | Input current on SDA and SCL | | -10(2) | | 10(2) | µA |
| $C_i$ | Capacitance for SDA and SCL | | | | 10 | pF |
| $t_{of}$ | Output fall time from $V_{I2C_H}$(min) to $V_{I2C_L}$(max) | Standard Mode | | | 250(3) | ns |
| | | Fast Mode | | | 250(3) | ns |
| $t_{SP}$ | Pulse width of spikes that must be suppressed by the input filter | Fast Mode | 0 | | 50(4) | ns |
| **OSCILLATOR** | | | | | | |
| $f_{OSCREF}$ | External clock reference | EXT_CLK_CONFIG = 000b | | 8 | | kHz |
| | | EXT_CLK_CONFIG = 001b | | 16 | | kHz |
| | | EXT_CLK_CONFIG = 010b | | 32 | | kHz |
| | | EXT_CLK_CONFIG = 011b | | 64 | | kHz |
| | | EXT_CLK_CONFIG = 100b | | 128 | | kHz |
| | | EXT_CLK_CONFIG = 101b | | 256 | | kHz |
| | | EXT_CLK_CONFIG = 110b | | 512 | | kHz |
| | | EXT_CLK_CONFIG = 111b | | 1024 | | kHz |
| **EEPROM** | | | | | | |
| $EE_{Prog}$ | Programming voltage | | 1.35 | 1.5 | 1.65 | V |
| $EE_{RET}$ | Retention | $T_A$ = 25 °C | | 100 | | Years |
| | | $T_J$ = -40 to 150 °C | 10 | | | Years |
| $EE_{END}$ | Endurance | $T_J$ = -40 to 150 °C | 1000 | | | Cycles |
| | | $T_J$ = -40 to 85 °C | 20000 | | | Cycles |
| **PROTECTION CIRCUITS** | | | | | | |
| $V_{UVLO}$ | Supply under voltage lockout (UVLO) | VM rising | 4.3 | 4.4 | 4.51 | V |
| | | VM falling | 4.1 | 4.2 | 4.3 | V |
| $V_{UVLO_HYS}$ | Supply under voltage lockout hysteresis | Rising to falling threshold | 110 | 200 | 350 | mV |
| $t_{UVLO}$ | Supply under voltage deglitch time | | 3 | 5 | 7 | µs |
| $V_{OVP}$ | Supply over voltage protection (OVP) threshold | Supply rising, OVP_EN = 1, OVP_SEL = 0 | 32.5 | 34 | 35 | V |
| | | Supply falling, OVP_EN = 1, OVP_SEL = 0 | 31.8 | 33 | 34.3 | V |
| | | Supply rising, OVP_EN = 1, OVP_SEL = 1 | 20 | 22 | 23 | V |
| | | Supply falling, OVP_EN = 1, OVP_SEL = 1 | 19 | 21 | 22 | V |
| $V_{OVP_HYS}$ | Supply over voltage protection hysteresis | Rising to falling threshold, OVP_SEL = 1 | 0.9 | 1 | 1.1 | V |
| | | Rising to falling threshold, OVP_SEL = 0 | 0.7 | 0.8 | 0.9 | V |
| $t_{OVP}$ | Supply over voltage deglitch time | | 2.5 | 5 | 7 | µs |
| $V_{CPUV}$ | Charge pump under voltage lockout (above VM) | Supply rising | 2.25 | 2.5 | 2.75 | V |
| | | Supply falling | 2.2 | 2.4 | 2.6 | V |
| $V_{CPUV_HYS}$ | Charge pump UVLO hysteresis | Rising to falling threshold | 65 | 100 | 150 | mV |
| $V_{AVDD_UV}$ | Analog regulator (AVDD) under voltage lockout | Supply rising | 2.7 | 2.85 | 3 | V |
| | | Supply falling | 2.5 | 2.65 | 2.8 | V |

Copyright © 2023 Texas Instruments Incorporated

$T_J$ = –40°C to +150°C, $V_{VM}$ = 4.5 to 35 V (unless otherwise noted). Typical limits apply for $T_A$ = 25°C, $V_{VM}$ = 24 V

| PARAMETER | | TEST CONDITIONS | MIN | TYP | MAX | UNIT |
|---|---|---|---|---|---|---|
| $V_{AVDD_UV_HYS}$ | Analog regulator under voltage lockout hysteresis | Rising to falling threshold | 180 | 200 | 240 | mV |
| $I_{OCP}$ | Over current protection trip point | OCP_LVL = 0b | 5.5 | 9 | 12 | A |
| | | OCP_LVL = 1b | 9 | 13 | 18 | A |
| $t_{OCP}$ | Over current protection deglitch time | OCP_DEG = 00b | 0.02 | 0.2 | 0.4 | µs |
| | | OCP_DEG = 01b | 0.2 | 0.6 | 1.2 | µs |
| | | OCP_DEG = 10b | 0.5 | 1.2 | 1.8 | µs |
| | | OCP_DEG = 11b | 0.9 | 1.6 | 2.5 | µs |
| $t_{RETRY}$ | Over current protection retry time | OCP_RETRY = 0 | 4 | 5 | 6 | ms |
| | | OCP_RETRY = 1 | 425 | 500 | 575 | ms |
| $T_{OTW}$ | Thermal warning temperature | Die temperature ($T_J$) | 135 | 145 | 155 | °C |
| $T_{OTW_HYS}$ | Thermal warning hysteresis | Die temperature ($T_J$) | 20 | 25 | 30 | °C |
| $T_{TSD_BUCK}$ | Thermal shutdown temperature (Buck) | Die temperature ($T_J$) | 170 | 180 | 190 | °C |
| $T_{TSD_BUCK_HYS}$ | Thermal shutdown hysteresis (Buck) | Die temperature ($T_J$) | 20 | 25 | 30 | °C |
| $T_{TSD}$ | Thermal shutdown temperature (FET) | Die temperature ($T_J$) | 165 | 175 | 185 | °C |
| $T_{TSD_HYS}$ | Thermal shutdown hysteresis (FET) | Die temperature ($T_J$) | 20 | 25 | 30 | °C |

(1) $R_{LBK}$ is resistance of inductor $L_{BK}$.
(2) If AVDD is switched off, I/O pins must not obstruct the SDA and SCL lines.
(3) The maximum tf for the SDA and SCL bus lines (300 ns) is longer than the specified maximum tof for the output stages (250 ns). This allows series protection resistors (Rs) to be connected between the SDA/SCL pins and the SDA/SCL bus lines without exceeding the maximum specified tf.
(4) Input filters on the SDA and SCL inputs suppress noise spikes of less than 50 ns.

## 6.6 Characteristics of the SDA and SCL bus for Standard and Fast mode

over operating free-air temperature range (unless otherwise noted)

| PARAMETER | | TEST CONDITIONS | MIN | NOM | MAX | UNIT |
|---|---|---|---|---|---|---|
| **Standard-mode** | | | | | | |
| $f_{SCL}$ | SCL clock frequency | | 0 | | 100 | kHz |
| $t_{HD_STA}$ | Hold time (repeated) START condition | After this period, the first clock pulse is generated | 4 | | | µs |
| $t_{LOW}$ | LOW period of the SCL clock | | 4.7 | | | µs |
| $t_{HIGH}$ | HIGH period of the SCL clock | | 4 | | | µs |
| $t_{SU_STA}$ | Set-up time for a repeated START condition | | 4.7 | | | µs |
| $t_{HD_DAT}$ | Data hold time (2) | I2C bus devices | 0 (3) | | (4) | µs |
| $t_{SU_DAT}$ | Data set-up time | | 250 | | | ns |
| $t_r$ | Rise time for both SDA and SCL signals | | | | 1000 | ns |
| $t_f$ | Fall time of both SDA and SCL signals (3) (6) (7) (8) | | | | 300 | ns |
| $t_{SU_STO}$ | Set-up time for STOP condition | | 4 | | | µs |
| $t_{BUF}$ | Bus free time between STOP and START condition | | 4.7 | | | µs |
| $C_b$ | Capacitive load for each bus line (9) | | | | 400 | pF |
| $t_{VD_DAT}$ | Data valid time (10) | | | | 3.45 (4) | µs |
| $t_{VD_ACK}$ | Data valid acknowledge time (11) | | | | 3.45 (4) | µs |
| $V_{nL}$ | Noise margin at the LOW level | For each connected device (including hysteresis) | 0.1*AVDD | | | V |


Copyright © 2023 Texas Instruments Incorporated

over operating free-air temperature range (unless otherwise noted)

| PARAMETER | | TEST CONDITIONS | MIN | NOM | MAX | UNIT |
|---|---|---|---|---|---|---|
| $V_{nh}$ | Noise margin at the HIGHlevel | For each connected device (including hysteresis) | 0.2*AVDD | | | V |
| **Fast-mode** | | | | | | |
| $f_{SCL}$ | SCL clock frequency | | 0 | | 400 | KHz |
| $t_{HD_STA}$ | Hold time (repeated) START condition | After this period, the first clock pulse is generated | 0.6 | | | µs |
| $t_{LOW}$ | LOW period of the SCL clock | | 1.3 | | | µs |
| $t_{HIGH}$ | HIGH period of the SCL clock | | 0.6 | | | µs |
| $t_{SU_STA}$ | Set-up time for a repeated START condition | | 0.6 | | | µs |
| $t_{HD_DAT}$ | Data hold time (2) | | 0 (3) | | (4) | µs |
| $t_{SU_DAT}$ | Data set-up time | | 100 (5) | | | ns |
| $t_r$ | Rise time for both SDA and SCL signals | | 20 | | 300 | ns |
| $t_f$ | Fall time of both SDA and SCL signals (3) (6) (7) (8) | | 20 x (AVDD/ 5.5V) | | 300 | ns |
| $t_{SU_STO}$ | Set-up time for STOP condition | | 0.6 | | | µs |
| $t_{BUF}$ | Bus free time between STOP and START condition | | 1.3 | | | µs |
| $C_b$ | Capacitive load for each bus line (9) | | | | 400 | pF |
| $t_{VD_DAT}$ | Data valid time (10) | | | | 0.9 (4) | µs |
| $t_{VD_ACK}$ | Data valid acknowledge time (11) | | | | 0.9 (4) | µs |
| $V_{nL}$ | Noise margin at the LOW level | For each connected device (including hysteresis) | 0.1*AVDD | | | V |
| $V_{nh}$ | Noise margin at the HIGHlevel | For each connected device (including hysteresis) | 0.2*AVDD | | | V |

(1) All values referred to $V_{IH(min)}$ ($0.3V_{DD}$) and $V_{IL(max)}$ levels
(2) $t_{HD_DAT}$ is the data hold time that is measured from the falling edge of SCL, applies to data in transmission and the acknowledge.
(3) A device must internally provide a hold time of at least 300 ns for the SDA signal (with respect to the $V_{IH(min)}$ of the SCL signal) to bridge the undefined region of the falling edge of SCL.
(4) The maximum $t_{HD_DAT}$ could be 3.45 µs and .9 µs for Standard-mode and Fast-mode, but must be less than the maximum of $t_{VD_DAT}$ or $t_{VD_ACK}$ by a transition time. This maximum must only be met if the device does not stretch the LOW period ($t_{LOW}$) of the SCL signal. If the clock stretched the SCL, the data must be valid by the set-up time before it releases the clock.
(5) A Fast-mode I2C-bus device can be used in a Standard-mode I2C-bus system, but the requirement $t_{SU_DAT}$ 250 ns must then be met. This will automatically be the case if the device does not stretch the LOW period of the SCL signal. If such a device does stretch the LOW period of the SCL signal, it must output the next data bit to the SDA line $t_{r(max)} + t_{SU_DAT}$ = 1000 + 250 = 1250 ns (according to the Standard-mode I2C-bus specification) before the SCL line is released. Also the acknowledge timing must meet this set-up time.
(6) If mixed with HS-mode devices, faster fall times according to Table 10 are allowed.
(7) The maximum $t_f$ for the SDA and SCL bus lines is specified at 300 ns. The maximum fall time for the SDA output stage $t_f$ is specified at 250 ns. This allows series protection resistors to be connected in between the SDA and the SCL pins and the SDA/SCL bus lines without exceeding the maximum specified $t_f$.
(8) In Fast-mode Plus, fall time is specified the same for both output stage and bus timing. If series resistors are used, designers should allow for this when considering bus timing.
(9) The maximum bus capacitance allowable may vary from the value depending on the actual operating voltage and frequency of the application.
(10) $t_{VD_DAT}$ = time for data signal from SCL LOW to SDA output (HIGH or LOW, depending on which one is worse).
(11) $t_{VD_ACK}$ = time for Acknowledgement signal from SCL LOW to SDA output (HIGH or LOW, dependging on which one is worse).

Copyright © 2023 Texas Instruments Incorporated

## 6.7 Typical Characteristics

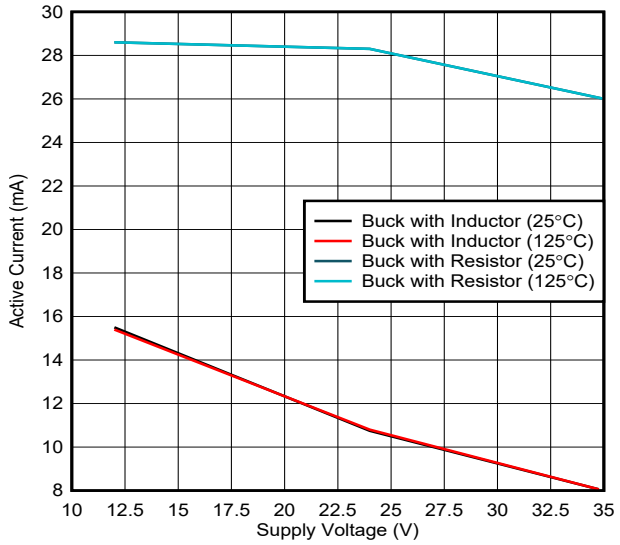


**Figure 6-1. Supply current over supply voltage**

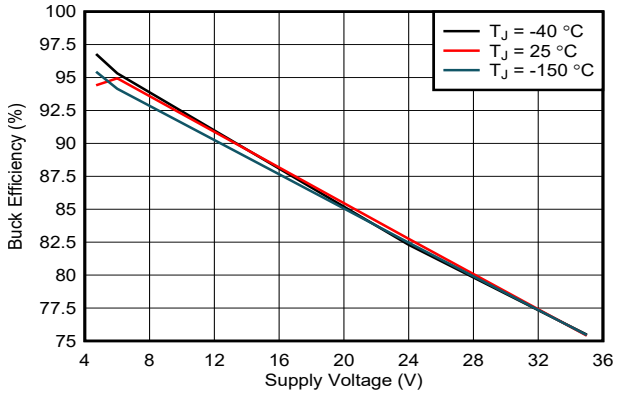


**Figure 6-2. Buck regulator efficiency over supply voltage**

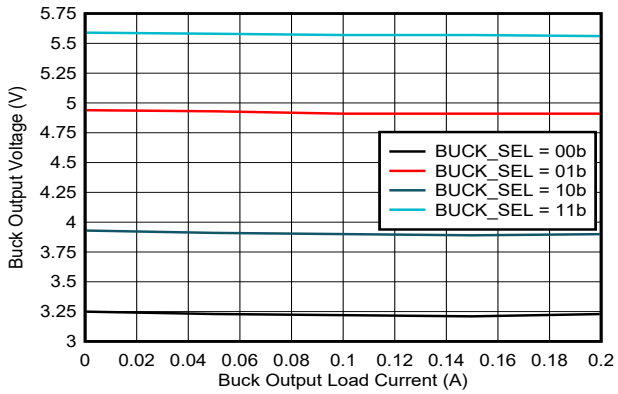


**Figure 6-3. Buck regulator output voltage over load current**


Copyright © 2023 Texas Instruments Incorporated

# 7 Detailed Description

## 7.1 Overview

The MCT8315A provides a single-chip, code-free sensorless trapezoidal solution for customers requiring high speed operation (up to 3 kHz electrical speed) or very fast start-up time (< 50ms) for 12- to 24-V brushless-DC motors requiring up to 4-A peak phase currents.

The MCT8315A integrates three ½-bridges with 40-V absolute maximum capability and a low $R_{DS(ON)}$ of 240-mΩ (high-side + low-side FETs) to enable high power drive capability. Current is sensed using integrated current sensing circuits which eliminate the need for external current sense resistors. Power management features including an output voltage-adjustable buck regulator and 3.3-V LDO generate the necessary voltage rails for the device and can also be used to power external circuits.

Sensorless trapezoidal control is highly configurable through register settings ranging from motor start-up behavior to closed loop operation. Register settings can be stored in non-volatile EEPROM, which allows the device to operate stand-alone once it has been configured. MCT8315A allows for a high level of monitoring; variables like duty cycle, motor speed, DC bus power can be displayed and observed as an analog output via two 12-bit DACs. This feature provides an effective method to tune speed loops as well as motor acceleration. The device can receive a speed command through a PWM signal, analog voltage, frequency input or $I^2C$ instruction.

In-built protection features include power-supply under voltage lockout (UVLO), charge-pump under voltage lockout (CPUV), over current protection (OCP), AVDD under voltage lockout (AVDD_UV), buck regulator UVLO, motor lock detection and over temperature warning and shutdown (OTW and TSD). Fault events are indicated by the nFAULT pin with detailed fault information available in the registers.

The MCT8315A device is available in a 0.5-mm pin pitch, VQFN surface-mount package. The VQFN package size is 7 mm × 5 mm with a height of 1 mm.

Copyright © 2023 Texas Instruments Incorporated

## 7.2 Functional Block Diagram

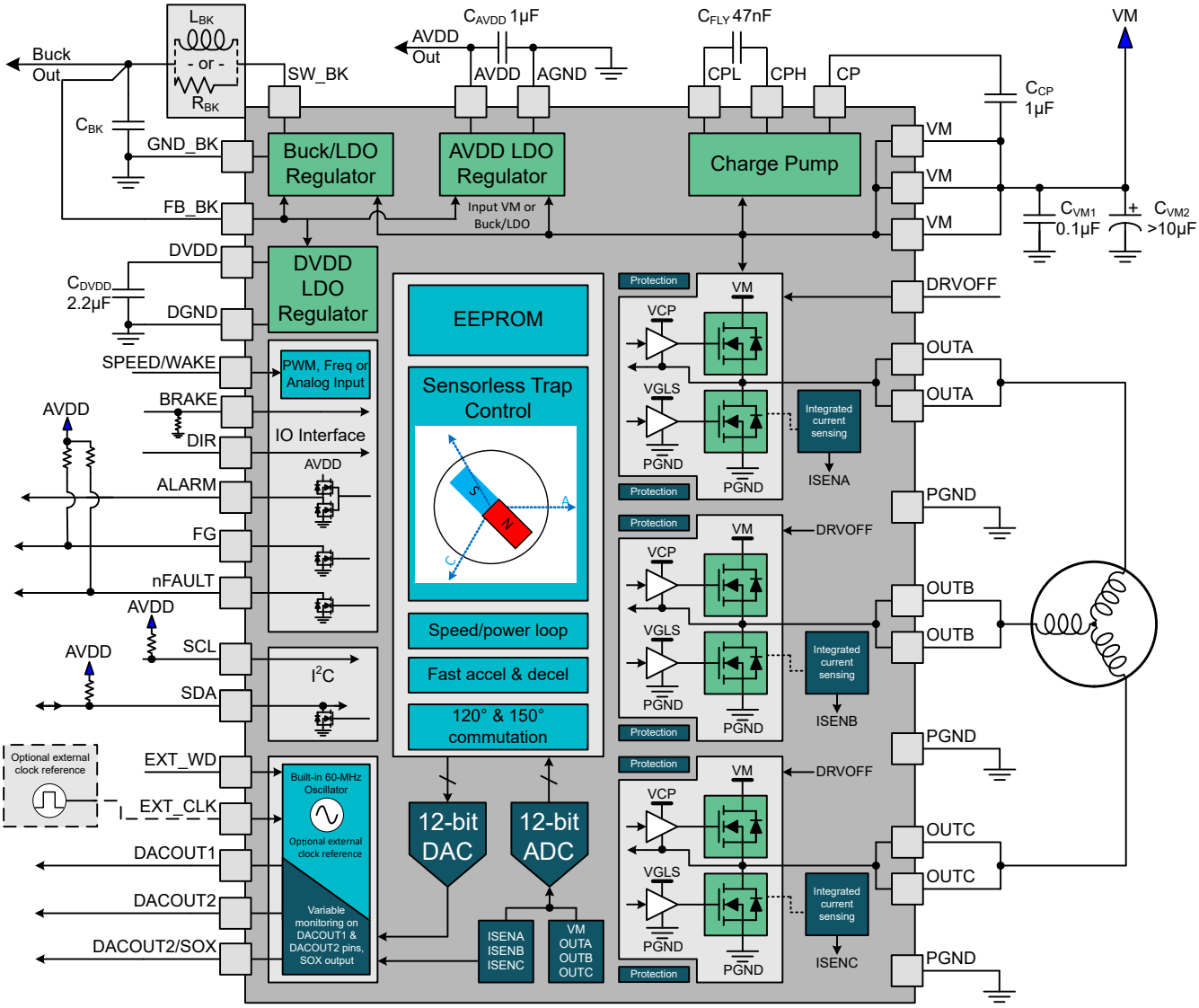


**Figure 7-1. MCT8315A Functional Block Diagram**


Copyright © 2023 Texas Instruments Incorporated

## 7.3 Feature Description

### 7.3.1 Output Stage

The MCT8315A consists of integrated 240-mΩ (combined high-side and low-side FETs' on-state resistance) NMOS FETs connected in a three-phase bridge configuration. A doubler charge pump provides the proper gate-bias voltage to the high-side NMOS FETs across a wide operating voltage range in addition to providing 100% duty-cycle support. An internal linear regulator provides the gate-bias voltage for the low-side MOSFETs.

### 7.3.2 Device Interface

MCT8315A supports $I^2C$ interface to provide end application design with adequate flexibility. MCT8315A allows controlling the motor operation and system through BRAKE, DIR, DRVOFF, EXT_CLK, EXT_WD and SPEED/WAKE pins. MCT8315A also provides different signals for monitoring internal variables, speed, fault and phase current feedback through DACOUT1, DACOUT2, FG, nFAULT, ALARM and SOX pins.

#### *7.3.2.1 Interface - Control and Monitoring*

**Motor Control Signals**

- When BRAKE pin is driven 'High', MCT8315A enters brake state. Low-side braking (see Low-Side Braking) is implemented during this brake state. MCT8315A decreases output speed to value defined by BRAKE_DUTY_THRESHOLD before entering brake state. As long as BRAKE is driven 'High', MCT8315A stays in brake state. Brake pin input can be overwritten by configuring BRAKE_INPUT over the $I^2C$ interface.
- The DIR pin decides the direction of motor spin; when driven 'High', the sequence is OUT A → OUT C → OUT B, and when driven 'Low', the sequence is OUT A → OUT B → OUT C. DIR pin input can be overwritten by configuring DIR_INPUT over the $I^2C$ interface.
- When DRVOFF pin is driven 'High', MCT8315A stops driving the motor by turning OFF all MOSFETs (coast state). When DRVOFF is driven 'Low', MCT8315A returns to normal state of operation, as if it was restarting the motor (see DRVOFF Functionality). DRVOFF does not cause the device to go to sleep or standby mode; the digital core is still active. Entry and exit from sleep or standby condition is controlled by SPEED pin.
- SPEED/WAKE pin is used to control motor speed and to wake up MCT8315A from sleep mode. SPEED pin can be configured to accept PWM, frequency or analog input signals. It is used to enter and exit from sleep and standby mode (see Table 7-3).

**External Oscillator and Watchdog Signals**

- EXT_CLK pin can be used to provide an external clock reference (see External Clock Source).
- EXT_WD pin can be used to provide an external watchdog signal (see External Watchdog).

**Output Signals**

- DACOUT1 outputs internal variable defined by address in register DACOUT1_VAR_ADDR. DACOUT1 is refreshed every PWM cycle (see DAC outputs).
- DACOUT2 outputs internal variable defined by address in register DACOUT2_VAR_ADDR. DACOUT2 is refreshed every PWM cycle (see DAC outputs).
- FG pin provides pulses which are proportional to motor speed (see FG Configuration).
- nFAULT (active low) pin provides fault status in device or motor operation.
- ALARM pin, if enabled using ALARM_PIN_EN, provides fault status in device or motor operation. When ALARM pin is enabled, report only faults are reported only on ALARM pin (as logic high) and not reported on nFAULT pin (as logic low). When ALARM pin is enabled, actionable faults are reported on ALARM pin (as logic high) as well as on nFAULT pin (as logic low). When ALARM pin is disabled, it is in Hi-Z state and all faults (actionable and report only) are reported on nFAULT as logic low. ALARM pin should be left floating when unused/disabled.
- SOX pin provides the output of one of the current sense amplifiers.

#### *7.3.2.2 $I^2C$ Interface*

The MCT8315A supports an $I^2C$ serial communication interface that allows an external controller to send and receive data. This $I^2C$ interface lets the external controller to configure the EEPROM and read detailed fault and motor state information. The $I^2C$ bus is a two-wire interface using the SCL and SDA pins which are described as follows :

- The SCL pin is the clock signal input.
- The SDA pin is the data input and output.

### 7.3.3 Step-Down Mixed-Mode Buck Regulator

The MCT8315A has an integrated mixed-mode buck regulator to supply regulated 3.3-V or 5-V power for an external controller or system voltage rail. Additionally, the buck output can also be configured to 4-V or 5.7-V for supporting the extra headroom for an external LDO for generating a 3.3-V or 5-V supplies. The output voltage of the buck is set by BUCK_SEL.

The buck regulator has a low quiescent current of ~1-2 mA during light loads to prolong battery life. The device improves performance during line and load transients by implementing a pulse-frequency current-mode control scheme which requires less output capacitance and simplifies frequency compensation design.

**Table 7-1. Recommended settings for Buck Regulator**

| Buck Mode | Buck output voltage | Max output current from AVDD ($I_{AVDD_MAX}$) | Max output current from Buck ($I_{BK_MAX}$) | Buck current limit | AVDD power sequencing |
|---|---|---|---|---|---|
| Inductor - 47 µH | 3.3-V or 4-V | 20 mA | 170 mA - $I_{AVDD}$ | 600 mA (BUCK_CL = 0b) | Not supported (BUCK_PS_DIS = 1b) |
| Inductor - 47 µH | 5-V or 5.7-V | 20 mA | 170 mA - $I_{AVDD}$ | 600 mA (BUCK_CL = 0b) | Supported (BUCK_PS_DIS = 0b) |
| Inductor - 22 µH | 5-V or 5.7-V | 20 mA | 20 mA - $I_{AVDD}$ | 150 mA (BUCK_CL = 1b) | Not supported (BUCK_PS_DIS = 1b) |
| Inductor - 22 µH | 3.3-V or 4-V | 20 mA | 20 mA - $I_{AVDD}$ | 150 mA (BUCK_CL = 1b) | Supported (BUCK_PS_DIS = 0b) |
| Resistor - 22 Ω | 5-V or 5.7-V | 20 mA | 10 mA - $I_{AVDD}$ | 150 mA (BUCK_CL = 1b) | Not supported (BUCK_PS_DIS = 1b) |
| Resistor - 22 Ω | 3.3-V or 4-V | 20 mA | 10 mA - $I_{AVDD}$ | 150 mA (BUCK_CL = 1b) | Supported (BUCK_PS_DIS = 0b) |

#### *7.3.3.1 Buck in Inductor Mode*

The buck regulator in MCT8315A is primarily designed to support low inductance of 47-µH and 22-µH. A 47-µH inductor allows the buck regulator to operate up to 170-mA load current support, whereas applications requiring current up to 20-mA can use a 22-µH inductor which saves component size.

Figure 7-2 shows the connection of buck regulator in inductor mode.

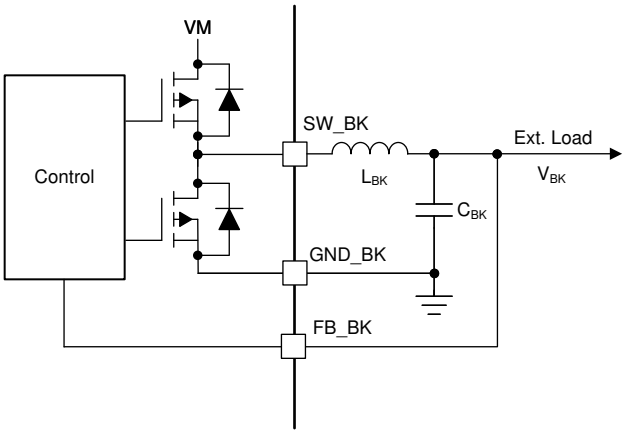


**Figure 7-2. Buck (Inductor Mode)**


Copyright © 2023 Texas Instruments Incorporated

#### 7.3.3.2 Buck in Resistor mode

If the external load requirement is less than 10-mA, the inductor can be replaced with a resistor. In resistor mode the power is dissipated across the external resistor and the efficiency is lower than buck in inductor mode.

Figure 7-3 shows the connection of buck in resistor mode.

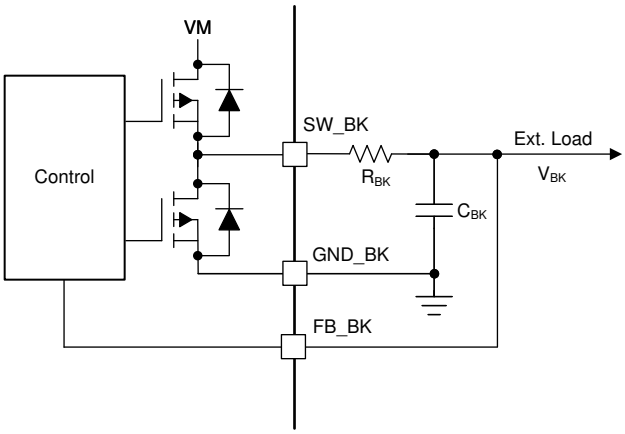


**Figure 7-3. Buck (Resistor Mode)**

#### 7.3.3.3 Buck Regulator with External LDO

The buck regulator also supports the voltage requirement to supply an external LDO to generate standard 3.3-V or 5-V output rail with higher accuracies. The buck output voltage should be configured to 4-V or 5.7-V to provide extra headroom to support the external LDO for generating 3.3-V or 5-V rail as shown in Figure 7-4. This allows for a lower-voltage LDO design to save cost and better thermal management due to low drop-out voltage.

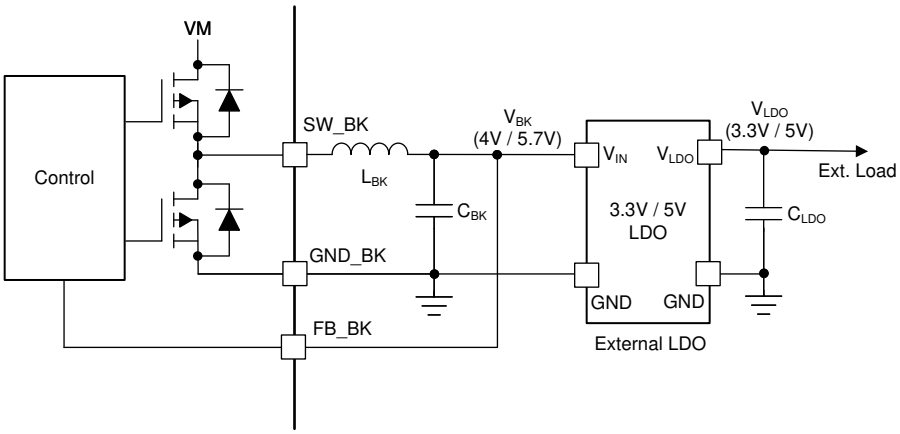


**Figure 7-4. Buck Regulator with External LDO**

#### 7.3.3.4 AVDD Power Sequencing from Buck Regulator

The AVDD LDO has an option of using the power supply from mixed mode buck regulator to reduce the device power dissipation. The power sequencing mode allows on-the-fly changeover of AVDD LDO input from DC mains (VM) to buck output ($V_{BK}$) as shown in Figure 7-5. This sequencing can be configured through the BUCK_PS_DIS bit . Power sequencing is supported only when buck output voltage is set to 5-V or 5.7-V.

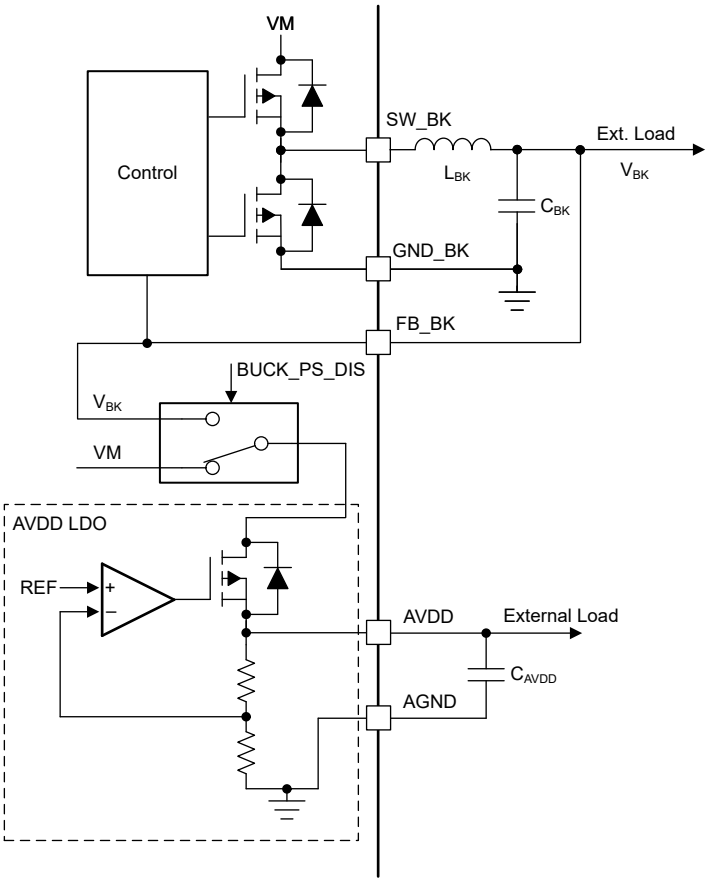


**Figure 7-5. AVDD Power Sequencing from Mixed Mode Buck Regulator**

### *7.3.3.5 Mixed Mode Buck Operation and Control*

The buck regulator implements a pulse frequency modulation (PFM) architecture with peak current mode control. The output voltage of the buck regulator is compared with the internal reference voltage ($V_{BK_REF}$) which is internally generated depending on the buck output voltage setting (BUCK_SEL) which constitutes an outer voltage control loop. Depending on the comparator output going high ($V_{BK} < V_{BK_REF}$) or low ($V_{BK} > V_{BK_REF}$), the high-side power FET of the buck turns on and off respectively. An independent current control loop monitors the current in high-side power FET ($I_{BK}$) and turns off the high-side FET when the current becomes higher than the buck current limit ($I_{BK_CL}$ set by BUCK_CL) - this implements a current limit control for the buck regulator. Figure 7-6 shows the architecture of the buck and various control/protection loops.


Copyright © 2023 Texas Instruments Incorporated

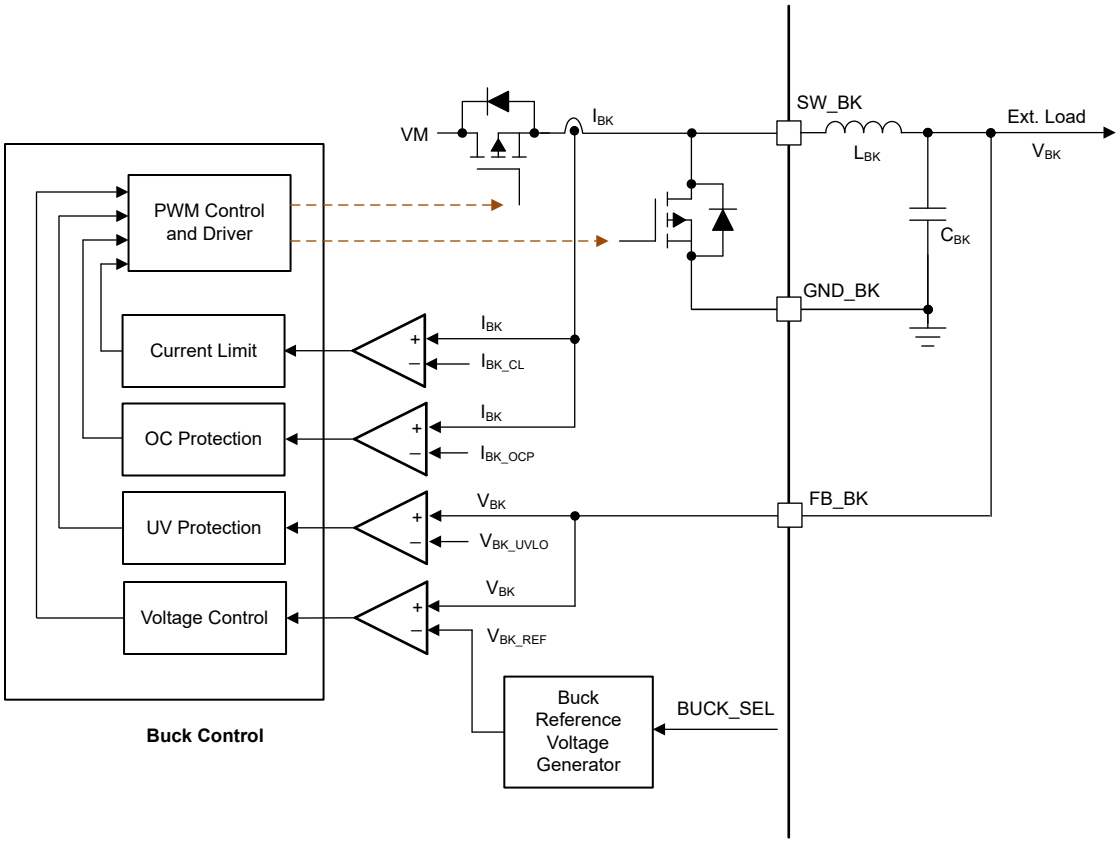


**Figure 7-6. Buck Operation and Control Loops**

#### *7.3.3.6 Buck Under Voltage Protection*

If at any time the voltage on the FB_BK pin (buck regulator output) falls lower than the $V_{BK_UV}$ threshold, both the high-side and low-side MOSFETs of the buck regulator are disabled. MCT8315A goes into reset state whenever buck UV event occurs, since the internal circuitry in MCT8315A is powered from the buck regulator output.

#### *7.3.3.7 Buck Over Current Protection*

The buck over current event is sensed by monitoring the current flowing through high-side MOSFET of the buck regulator. If the current through the high-side MOSFET exceeds the $I_{BK_OCP}$ threshold for a time longer than the deglitch time ($t_{OCP_DEG}$), a buck OCP event is recognized and both the high-side and low-side MOSFETs of the buck regulator are disabled. MCT8315A goes into reset state whenever buck OCP event occurs, since the internal circuitry in MCT8315A is powered from the buck regulator output.

### 7.3.4 AVDD Linear Voltage Regulator

A 3.3-V linear regulator is integrated into MCT8315A and is available for use by external circuitry. This AVDD LDO regulator is used for powering up the internal circuitry of the device and additionally, this regulator can also provide the supply voltage for a low-power MCU or other external circuitry supporting up to 20-mA. The output of the AVDD regulator should be bypassed near the AVDD pin with a X5R or X7R, 1-µF, 6.3-V ceramic capacitor routed directly back to the adjacent AGND ground pin.

The AVDD nominal, no-load output voltage is 3.3-V.

Copyright © 2023 Texas Instruments Incorporated

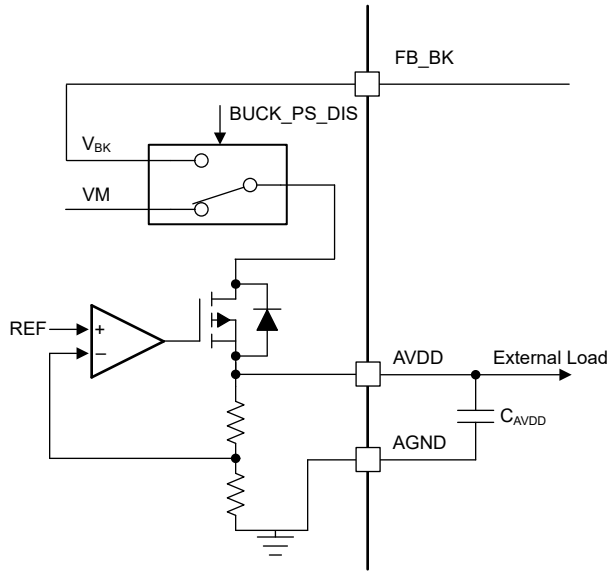


**Figure 7-7. AVDD Linear Regulator Block Diagram**

Use Equation 1 to calculate the power dissipated in the device by the AVDD linear regulator with VM as supply (BUCK_PS_DIS = 1b)

$$P = (V_{VM} - V_{AVDD}) \times I_{AVDD} \tag{1}$$

For example, at a $V_{VM}$ of 24-V, drawing 20-mA out of AVDD results in a power dissipation as shown in Equation 2.

$$P = (24\ V - 3.3\ V) \times 20\ mA = 414\ mW \tag{2}$$

Use Equation 3 to calculate the power dissipated in the device by the AVDD linear regulator with buck output as supply (BUCK_PS_DIS = 0b)

$$P = (V_{FB_BK} - V_{AVDD}) \times I_{AVDD} \tag{3}$$

### 7.3.5 Charge Pump

Since the output stages use N-channel FETs, the device requires a gate-drive voltage higher than the VM power supply to turn-on the high-side FETs. The MCT8315A integrates a charge-pump circuit that generates a voltage above the VM supply for this purpose.

The charge pump requires two external capacitors ($C_{CP}$, $C_{FLY}$) for operation. See Figure 7-1 and Table 5-1 for details on these capacitors (value, connection, and so forth).


Copyright © 2023 Texas Instruments Incorporated

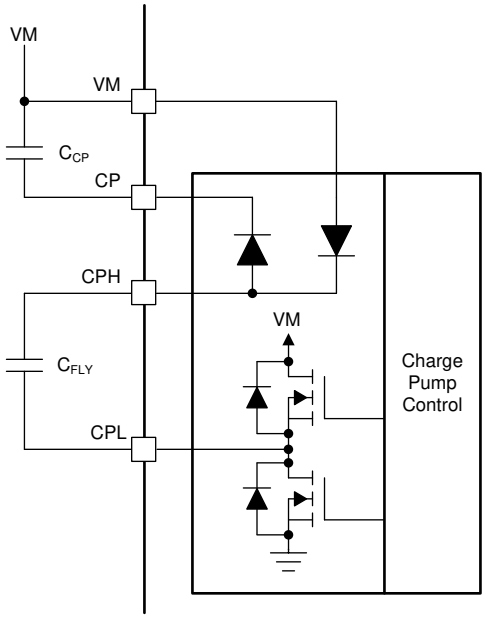


**Figure 7-8. Charge Pump**

### 7.3.6 Slew Rate Control

An adjustable gate-drive current control is provided for the output stage MOSFETs to achieve configurable slew rate for EMI mitigation. The MOSFET VDS slew rate is a critical factor for optimizing radiated emissions, total energy and duration of diode recovery spikes and switching voltage transients related to parasitic elements of the PCB. This slew rate is predominantly determined by the control of the internal MOSFET gate current as shown in Figure 7-9.

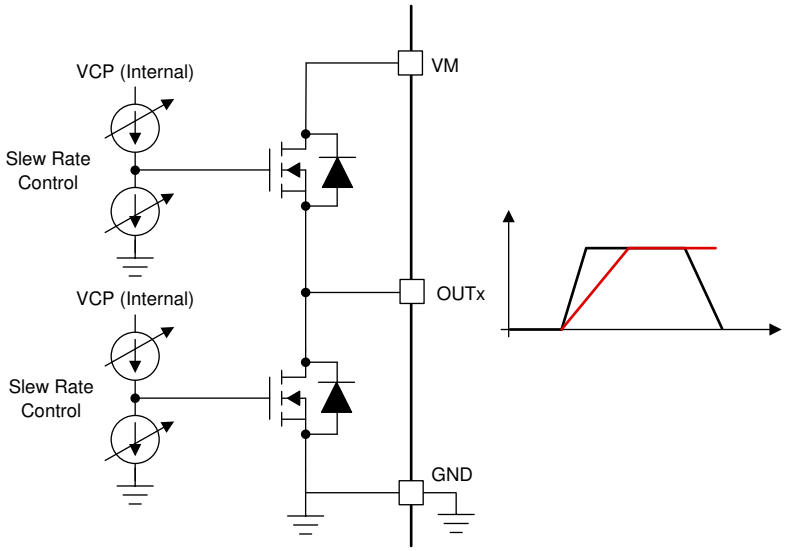


**Figure 7-9. Slew Rate Circuit Implementation**

The slew rate of each half-bridge can be adjusted through SLEW_RATE settings. Slew rate can be configured as 25-V/µs, 50-V/µs, 125-V/µs or 200-V/µs. The slew rate is calculated by the rise-time and fall-time of the voltage on OUTx pin as shown in Figure 7-10.

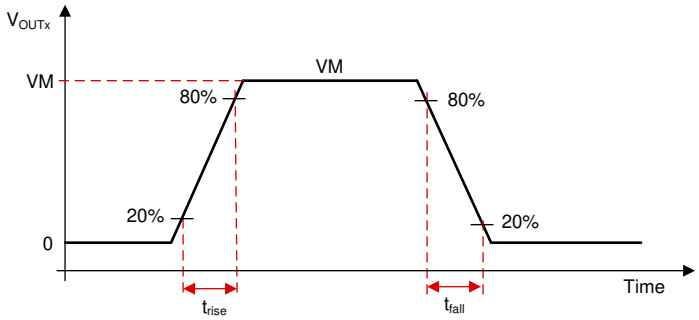


**Figure 7-10. Slew Rate Timings**

### 7.3.7 Cross Conduction (Dead Time)

The device is fully protected against any cross conduction of MOSFETs - during the switching of high-side and low-side MOSFETs, MCT8315A avoids shoot-through events by inserting a dead time ($t_{dead}$). This is implemented by sensing the gate-source voltage (VGS) of the high-side and low-side MOSFETs and ensuring that VGS of high-side MOSFET has dropped below turn-off level before switching on the low-side MOSFET of same half-bridge (or vice-versa) as shown in Figure 7-11and Figure 7-12. The VGS of the high-side and low-side MOSFETs (VGS_HS and VGS_LS) shown in Figure 7-12 are internal signals.

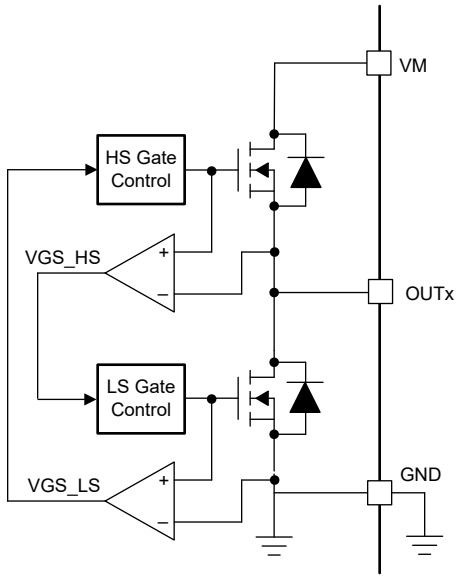


**Figure 7-11. Cross Conduction Protection**


Copyright © 2023 Texas Instruments Incorporated

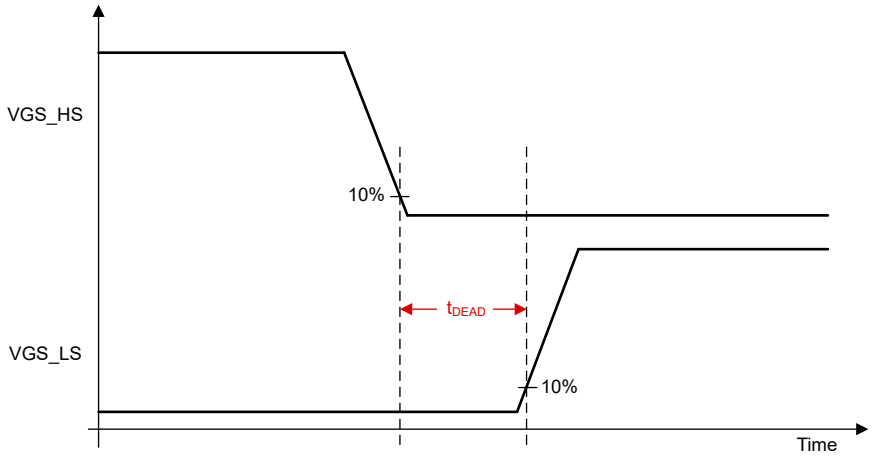


**Figure 7-12. Dead Time**

### 7.3.8 Speed Control

The MCT8315A offers four methods of directly controlling the speed of the motor. The speed control method is configured by SPD_CTRL_MODE. The speed command can be controlled in one of the following four ways.

- PWM input on SPEED pin by varying duty cycle of input signal
- Frequency input on SPEED pin by varying frequency of input signal
- Analog input on SPEED pin by varying amplitude of input signal
- Over $I^2C$ by configuring SPEED_CTRL

The speed can also be indirectly controlled by varying the supply voltage ($V_M$).

The signal path from SPEED pin input (or $I^2C$ based speed input) to output duty cycle (DUTY_OUT) applied to FETs is shown in Figure 7-13.

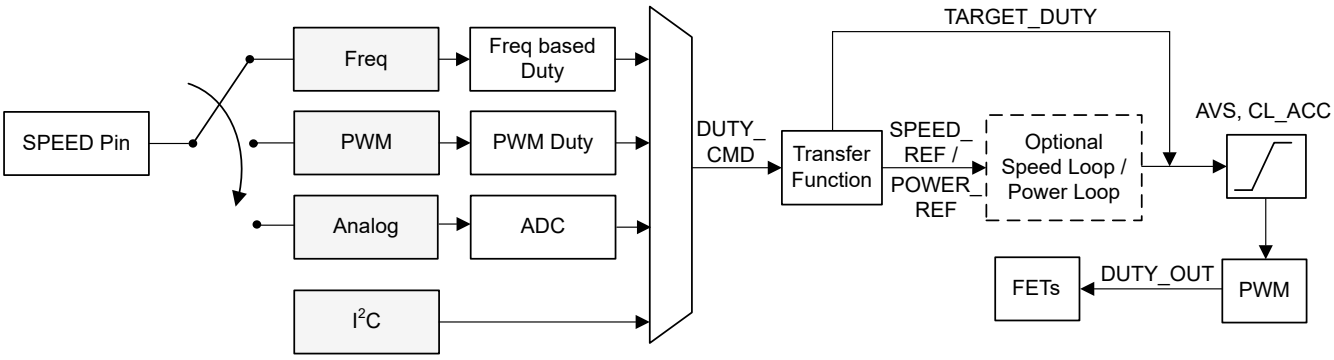


**Figure 7-13. Multiplexing the Speed Command**

Figure 7-14 shows the transfer function between DUTY_CMD and SPEED_REF / POWER_REF / TARGET_DUTY.

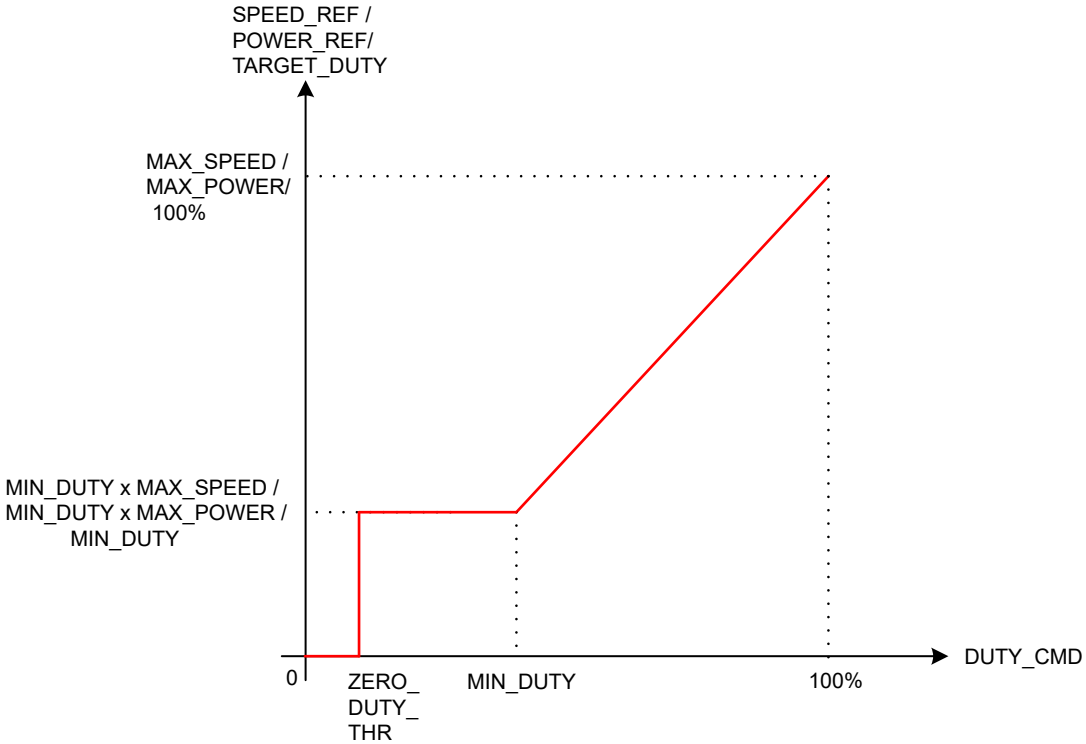


**Figure 7-14. Speed Input Transfer Function**


Copyright © 2023 Texas Instruments Incorporated

When speed/power loop is disabled (CLOSED_LOOP_MODE = 00b), DUTY_CMD sets the TARGET_DUTY in % - TARGET_DUTY is 100% when DUTY_CMD is 100% and TARGET_DUTY is equal to MIN_DUTY when DUTY_CMD is set to MIN_DUTY. TARGET_DUTY stays clamped at MIN DUTY for ZERO_DUTY_THR ≤ DUTY_CMD ≤ MIN_DUTY.

When speed loop is enabled (CLOSED_LOOP_MODE = 01b), DUTY_CMD sets the SPEED_REF in Hz. MAX_SPEED sets the SPEED_REF at DUTY_CMD of 100%. MIN_DUTY sets the minimum SPEED_REF (MIN_DUTY x MAX_SPEED). SPEED_REF stays clamped at (MIN_DUTY x MAX_SPEED) for ZERO_DUTY_THR ≤ DUTY_CMD ≤ MIN_DUTY.

When power loop is enabled (CLOSED_LOOP_MODE = 10b), DUTY_CMD sets the POWER_REF in W. MAX_POWER sets the POWER_REF at DUTY_CMD of 100%. MIN_DUTY sets the minimum POWER_REF (MIN_DUTY x MAX_POWER). POWER_REF stays clamped at (MIN_DUTY x POWER_REF) for ZERO_DUTY_THR ≤ DUTY_CMD ≤ MIN_DUTY.

ZERO_DUTY_THR sets the DUTY_CMD below which SPEED_REF / POWER_REF / TARGET_DUTY is set to zero and motor is in stopped state. AVS, CL_ACC configure the transient characteristics of DUTY_OUT; the steady state value of DUTY_OUT is directly configured in % through TARGET_DUTY (when speed/power loop is disabled) or through SPEED_REF/POWER_REF (when speed/power loop is enabled).

#### *7.3.8.1 Analog Mode Speed Control*

Analog input based speed control can be configured by setting SPD_CTRL_MODE to 00b. In this mode, the duty command (DUTY_CMD) varies with the analog voltage input on the SPEED pin ($V_{SPEED}$). When 0 ≤ $V_{SPEED}$ ≤ $V_{EN_SB}$, DUTY_CMD is set to zero and the motor is stopped. When $V_{EX_SB}$ ≤ $V_{SPEED}$ ≤ $V_{ANA_FS}$, DUTY_CMD varies linearly with $V_{SPEED}$ as shown in Figure 7-15. $V_{EX_SB}$ and $V_{EN_SB}$ are the standby entry and exit thresholds - refer Section 7.4.1.2 for more information on $V_{EX_SB}$ and $V_{EN_SB}$. When $V_{SPEED}$ > $V_{ANA_FS}$, DUTY_CMD is clamped to 100%.

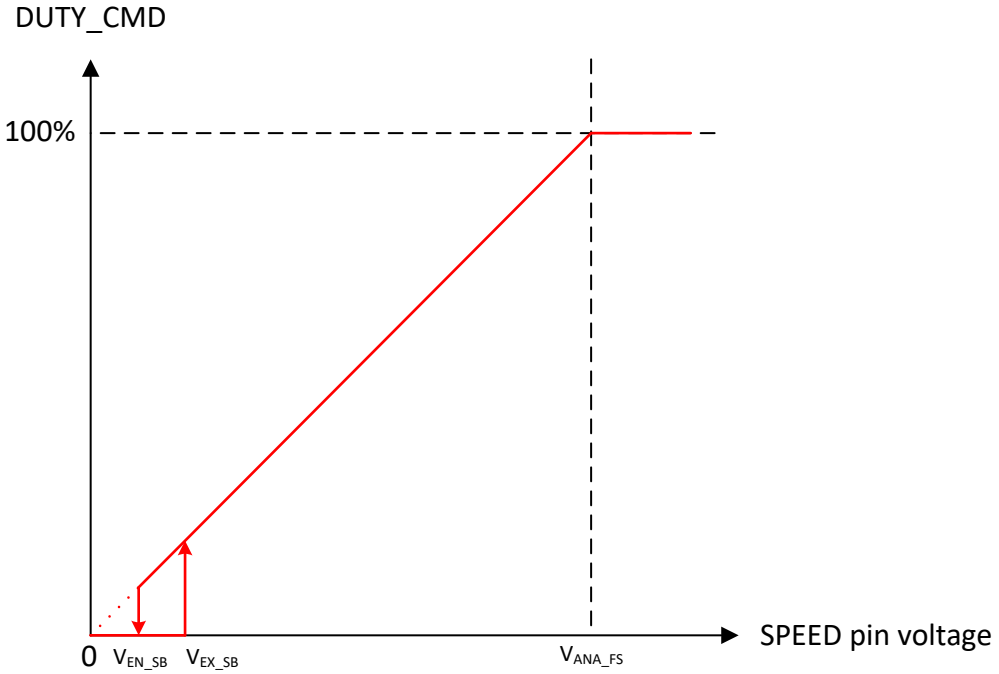


**Figure 7-15. Analog Mode Speed Control**

#### *7.3.8.2 PWM Mode Speed Control*

PWM based speed control can be configured by setting SPD_CTRL_MODE to 01b. In this mode, the PWM duty cycle applied to the SPEED pin can be varied from 0 to 100% and duty command (DUTY_CMD) varies linearly with the applied PWM duty cycle. When 0 ≤ $Duty_{SPEED}$ ≤ $Duty_{EN_SB}$, DUTY_CMD is set to zero and the motor is stopped. When $Duty_{EX_SB}$ ≤ $Duty_{SPEED}$ ≤ 100%, DUTY_CMD varies linearly with $Duty_{SPEED}$ as shown in

Figure 7-16. $Duty_{EX_SB}$ and $Duty_{EN_SB}$ are the standby entry and exit thresholds - refer Section 7.4.1.2 for more information on $Duty_{EX_SB}$ and $Duty_{EN_SB}$. The frequency of the PWM input signal applied to the SPEED pin is defined as $f_{PWM}$ and the range for this frequency can be configured through SPD_PWM_RANGE_SELECT.

**Note**

1. $f_{PWM}$ is the frequency of the PWM signal the device can accept at SPEED pin to control motor speed. It does not correspond to the PWM output frequency that is applied to the motor phases. The PWM output frequency can be configured through PWM_FREQ_OUT (see Section 7.3.15).
2. SLEEP_TIME should be set longer than the off time in PWM signal ($V_{SPEED} < V_{IL}$) at lowest duty input. For example, if $f_{PWM}$ is 10 kHz and lowest duty input is 2%, SLEEP_TIME should be more than 98 µs to ensure there is no unintended sleep entry.

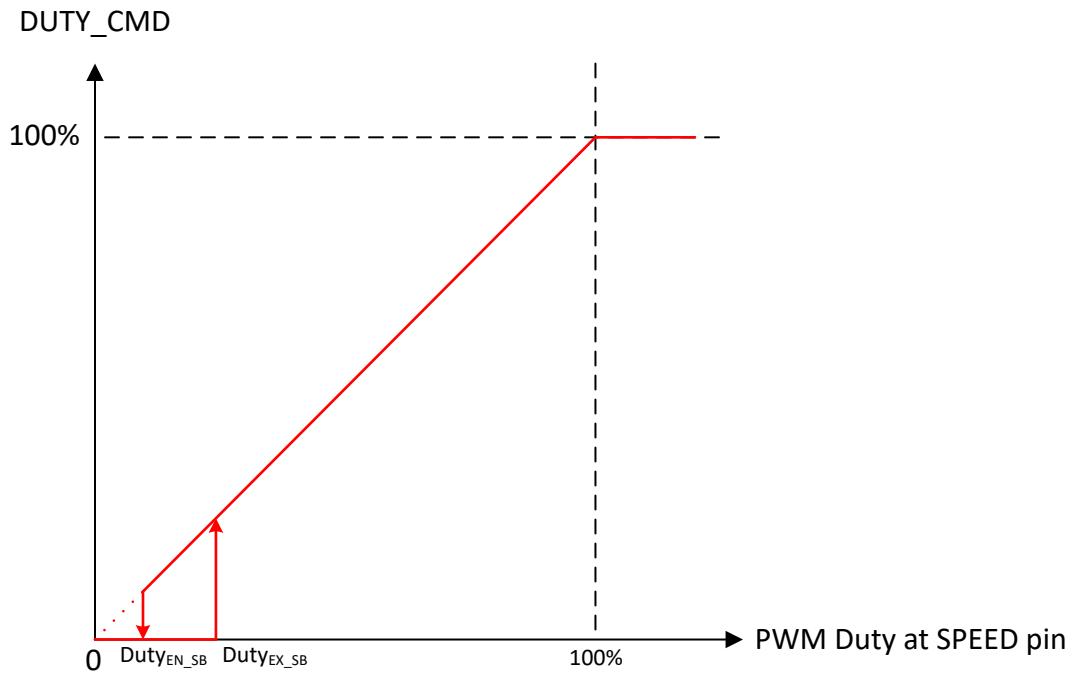


**Figure 7-16. PWM Mode Speed Control**

### *7.3.8.3 I²C based Speed Control*

I²C based serial interface can be used for speed control by setting SPD_CTRL_MODE to 10b. In this mode, the speed command can be written directly into SPEED_CTRL. The SPEED pin can be used to control the sleep entry and exit - if SPEED pin input is set to a value lower than $V_{EN_SL}$ after SPEED_CTRL has been set to 0b for a time longer than SLEEP_TIME, MCT8315A enters sleep state. When SPEED pin > $V_{EX_SL}$, MCT8315A exits sleep state and speed is controlled through SPEED_CTRL. If 0 ≤ SPEED_CTRL ≤ $SPEED_CTRL_{EN_SB}$ and SPEED pin > $V_{EX_SL}$, MCT8315A is in standby state. The relationship between DUTY_CMD and SPEED_CTRL is shown in Figure 7-17. Refer Section 7.4.1.2 for more information on $SPEED_CTRL_{EN_SB\ EX_SB}$ and $SPEED_CTRL_{EN_SB\ EN_SB}$.


Copyright © 2023 Texas Instruments Incorporated

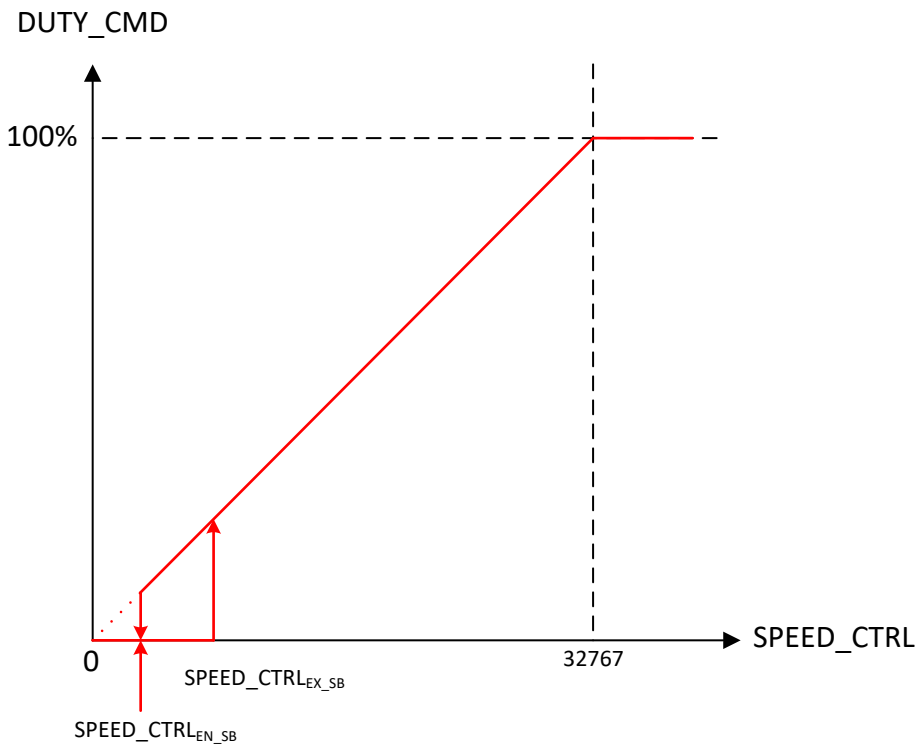


**Figure 7-17. I2C Mode Speed Control**

### *7.3.8.4 Frequency Mode Speed Control*

Frequency based speed control is configured by setting SPD_CTRL_MODE to 11b. In this mode, duty command varies linearly as a function of the frequency of the square wave input at SPEED pin. When 0 ≤ $Freq_{SPEED}$ ≤ $Freq_{EN_SB}$, DUTY_CMD is set to zero and the motor is stopped. When $Freq_{EX_SB}$ ≤ $Freq_{SPEED}$ ≤ INPUT_MAX_FREQUENCY, DUTY_CMD varies linearly with $Freq_{SPEED}$ as shown in Figure 7-18. $Freq_{EX_SB}$ and $Freq_{EN_SB}$ are the standby entry and exit thresholds - refer Section 7.4.1.2 for more information on $Freq_{EX_SB}$ and $Freq_{EN_SB}$. Input frequency greater than INPUT_MAX_FREQUENCY clamps the DUTY_CMD to 100%.

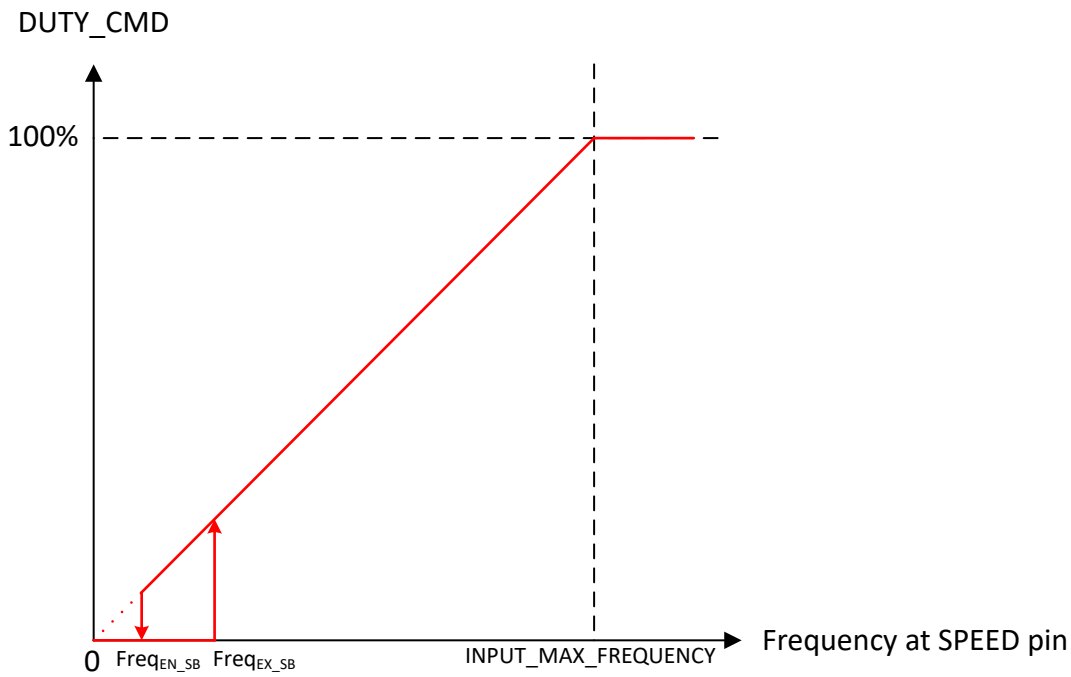


**Figure 7-18. Frequency Mode Speed Control**

### 7.3.9 Starting the Motor Under Different Initial Conditions

The motor can be in one of three states when MCT8315A begins the start-up process. The motor may be stationary, spinning in the forward direction, or spinning in the reverse direction. The MCT8315A includes a number of features to allow for reliable motor start-up under all of these conditions. Figure 7-19 shows the motor start-up flow for each of the three initial motor states.

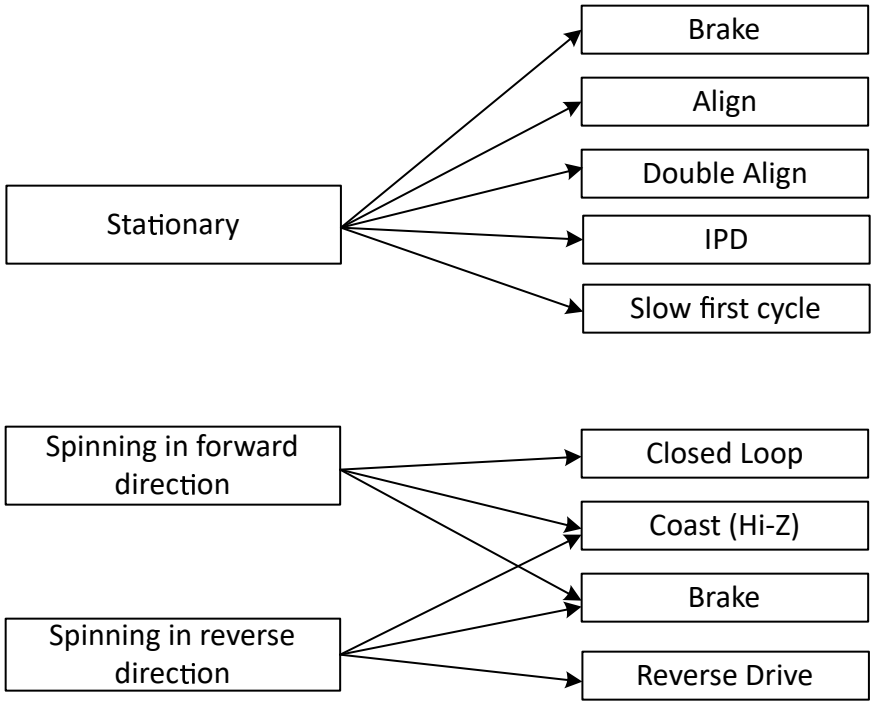


**Figure 7-19. Starting the motor under different initial conditions**


Copyright © 2023 Texas Instruments Incorporated

**Note**

"Forward" means "spinning in the same direction as the commanded direction", and "Reverse" means "spinning in the opposite direction as the commanded direction".

#### *7.3.9.1 Case 1 – Motor is Stationary*

If the motor is stationary, the commutation must be initialized to be in phase with the position of the motor. The MCT8315A provides various options to initialize the commutation logic to the motor position and reliably start the motor.

- The align and double align techniques force the motor into alignment by applying a voltage across particular motor phases to force the motor to rotate in alignment with this phase.
- Initial position detect (IPD) determines the position of the motor based on the deterministic inductance variation, which is often present in BLDC motors.
- The slow first cycle method starts the motor by applying a low frequency cycle to align the rotor position to the applied commutation by the end of one electrical rotation.

MCT8315A also provides a configurable brake option to ensure the motor is stationary before initiating one of the above start-up methods. Device enters open loop acceleration after going through the configured start-up method.

#### *7.3.9.2 Case 2 – Motor is Spinning in the Forward Direction*

If the motor is spinning forward (same direction as the commanded direction) with sufficient speed (BEMF), the MCT8315A resynchronizes with the spinning motor and continues commutation by going directly to closed loop operation. By resynchronizing to the spinning motor, the user achieves the fastest possible start-up time for this initial condition. This resynchronization feature can be enabled or disabled through RESYNC_EN. If resynchronization is disabled, the MCT8315A can be configured to wait for the motor to coast to a stop and/or apply a brake. After the motor has stopped spinning, the motor start-up sequence proceeds as in Case 1, considering the motor is stationary.

#### *7.3.9.3 Case 3 – Motor is Spinning in the Reverse Direction*

If the motor is spinning in the reverse direction (the opposite direction as the commanded direction), the MCT8315A provides several methods to change the direction and drive the motor to the target speed reference in the commanded direction.

The reverse drive method allows the motor to be driven so that it decelerates through zero speed. The motor achieves the shortest possible spin-up time when spinning in the reverse direction.

If reverse drive is not enabled, then the MCT8315A can be configured to wait for the motor to coast to a stop and/or apply a brake. After the motor has stopped spinning, the motor start-up sequence proceeds as in Case 1, considering the motor is stationary.

**Note**

Take care when using the reverse drive or brake feature to ensure that the current is limited to an acceptable level and that the supply voltage does not surge as a result of energy being returned to the power supply.

Copyright © 2023 Texas Instruments Incorporated

### 7.3.10 Motor Start Sequence (MSS)

Figure 7-20 shows the motor-start sequence implemented in the MCT8315A device.

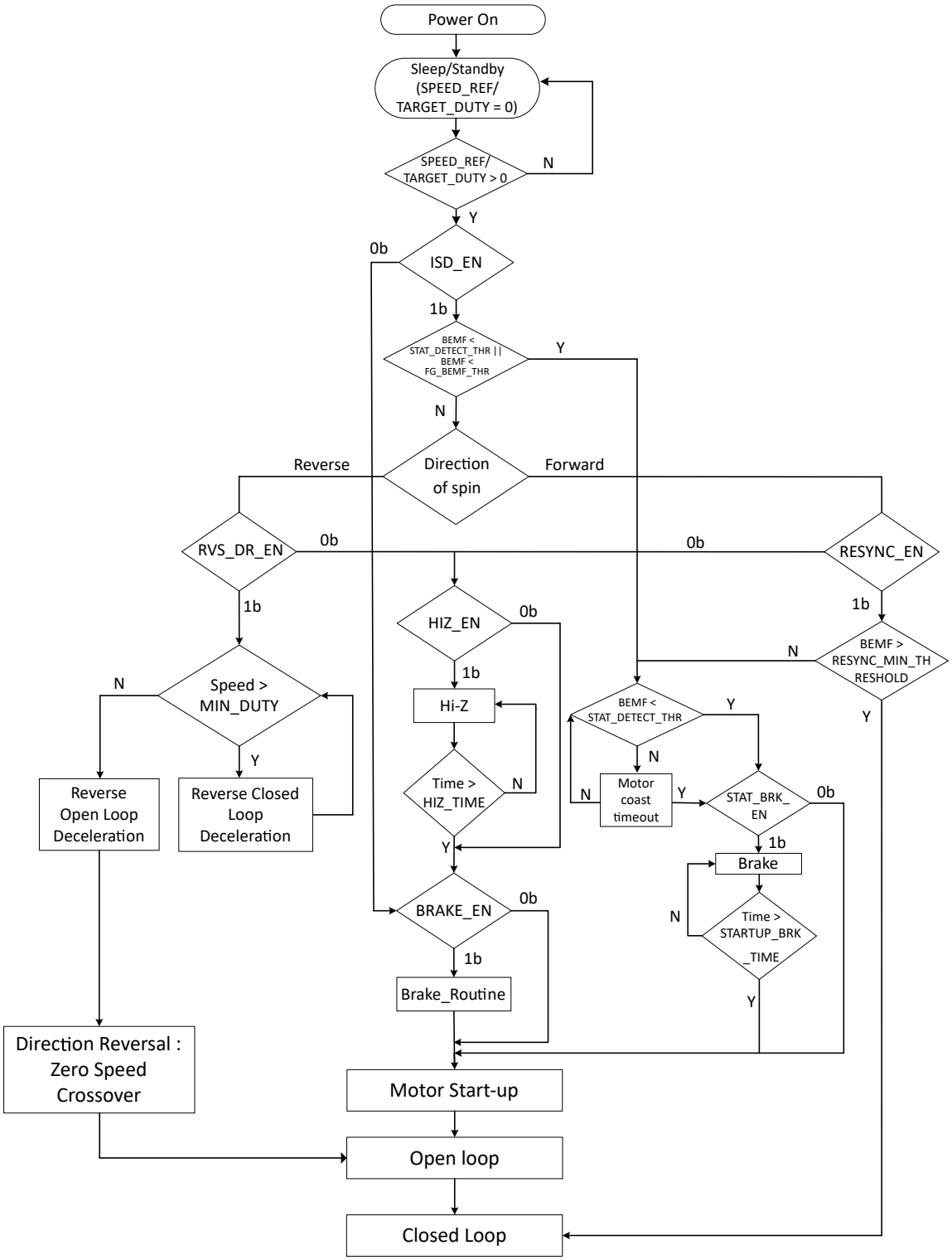


**Figure 7-20. Motor Start Sequence**


Copyright © 2023 Texas Instruments Incorporated

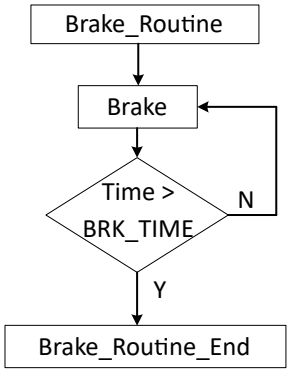


**Figure 7-21. Brake Routine**

**Power-On State**

This is the initial state of the Motor Start Sequence (MSS) when MCT8315A is powered on. In this state, MCT8315A configures the peripherals, initializes the algorithm parameters from EEPROM and prepares for driving the motor.

**Sleep/Standby**

In this state, SPEED_REF/POWER_REF/TARGET_DUTY is set to zero and MCT8315A is either in sleep or standby mode depending on DEV_MODE and SPEED/WAKE pin voltage.

**SPEED_REF/POWER_REF/ TARGET_DUTY > 0 Judgement**

When SPEED_REF/POWER_REF/TARGET_DUTY is set to greater than zero, MCT8315A exits the sleep/standby state and proceeds to ISD_EN judgement. As long as SPEED_REF is set to zero, MCT8315A stays in sleep/standby state.

**ISD_EN Judgement**

MCT8315A checks to see if the initial speed detect (ISD) function is enabled (ISD_EN = 1b). If ISD is enabled, MSS proceeds to the BEMF < STAT_DETECT_THR judgement. Instead, if ISD is disabled, the MSS proceeds directly to the BRAKE_EN judgement.

**BEMF < STAT_DETECT_THR or BEMF < FG_BEMF_THR Judgement**

ISD determines the initial condition (speed, angle, direction of spin) of the motor (see Section 7.3.10.1). If motor is deemed to be stationary (BEMF < STAT_DETECT_THR or BEMF < FG_BEMF_THR), the MSS proceeds to second BEMF < STAT_DETECT_THR judgement. If the motor is not stationary, MSS proceeds to verify the direction of spin.

**Direction of spin Judgement**

The MSS determines whether the motor is spinning in the forward or the reverse direction. If the motor is spinning in the forward direction, the MCT8315A proceeds to the RESYNC_EN judgement. If the motor is spinning in the reverse direction, the MSS proceeds to the RVS_DR_EN judgement.

**RESYNC_EN Judgement**

If RESYNC_EN is set to 1b, MCT8315A proceeds to BEMF > RESYNC_MIN_THRESHOLD judgement. If RESYNC_EN is set to 0b, MSS proceeds to HIZ_EN judgement.

**BEMF > RESYNC_MIN_THRESHOLD Judgement**

If motor speed is such that BEMF > RESYNC_MIN_THRESHOLD, MCT8315A uses the speed and position information from ISD to transition to the closed loop state (see Motor Resynchronization ) directly. If BEMF < RESYNC_MIN_THRESHOLD, MCT8315A proceeds to BEMF < STAT_DETECT_THR judgement.

**BEMF < STAT_DETECT_THR Judgement**

If motor speed is such that BEMF > STAT_DETECT_THR, MCT8315A proceeds to motor coast timeout. If BEMF < STAT_DETECT_THR, MCT8315A proceeds to STAT_BRK_EN judgement.

**Motor Coast Timeout**

MCT8315A waits for 200000 PWM cycles for the motor to coast down to a speed where BEMF < STAT_DETECT_THR; after 200000 PWM cycles

Copyright © 2023 Texas Instruments Incorporated

| | |
|---|---|
| | lapse in the motor coast state, MCT8315A proceeds to STAT_BRK_EN judgement irrespective of BEMF. If BEMF < STAT_DETECT_THR during motor coast before the 200000 cycle timeout, MCT8315A proceeds to STAT_BRK_EN judgement immediately. |
| **STAT_BRK_EN Judgement** | The MSS checks if the stationary brake function is enabled (STAT_BRK_EN =1b). If the stationary brake function is enabled, the MSS advances to the stationary brake routine. If the stationary brake function is disabled, the MSS advances to motor start-up state (see Section 7.3.10.4). |
| **Stationary Brake Routine** | The stationary brake routine can be used to ensure the motor is completely stationary before attempting to start the motor. The stationary brake is applied by turning on all three low-side driver MOSFETs for a time configured by STARTUP_BRK_TIME. |
| **RVS_DR_EN Judgement** | The MSS checks to see if the reverse drive function is enabled (RVS_DR_EN = 1b). If it is enabled, the MSS transitions to check speed of the motor in reverse direction. If the reverse drive function is not enabled (RVS_DR_EN = 0b), the MSS advances to the HIZ_EN judgement. |
| **Speed > MIN_DUTY Judgement** | The MSS checks if the speed (in reverse direction) is higher than the speed at MIN_DUTY - till the speed (in reverse direction) is higher than the speed at MIN_DUTY, MSS stays in reverse closed loop deceleration. When speed (in reverse direction) drops below the speed at MIN_DUTY, the MSS transitions to reverse open loop deceleration. |
| **Reverse Open Loop Deceleration and Zero Speed Crossover** | In reverse open loop deceleration, the MCT8315A decelerates the motor in open-loop till speed reaches zero. At zero speed, direction changes and MCT8315A begins open loop acceleration. |
| **HIZ_EN Judgement** | The MSS checks to determine whether the coast (Hi-Z) function is enabled (HIZ_EN = 1b). If the coast function is enabled (HIZ_EN = 1b), the MSS advances to the coast routine. If the coast function is disabled (HIZ_EN = 0b), the MSS advances to the BRAKE_EN judgement. |
| **Coast (Hi-Z) Routine** | The device coasts the motor by turning OFF all six MOSFETs for a certain time configured by HIZ_TIME. |
| **BRAKE_EN Judgement** | The MSS checks to determine whether the brake function is enabled (BRAKE_EN = 1b). If the brake function is enabled (BRAKE_EN = 1b), the MSS advances to the brake routine. If the brake function is disabled (BRAKE_EN = 0b), the MSS advances to the motor start-up state (see Section 7.3.10.4). |
| **Brake Routine** | MCT8315A implements a brake by turning on all three (high-side or low-side) MOSFETS for BRK_TIME. Brake is applied either using high-side or low-side MOSFETs based on BRK_MODE configuration. |
| **Closed Loop** | In this state, the MCT8315A drives the motor with sensorless trapezoidal commutation based on either zero cross detection or BEMF integration. |

#### *7.3.10.1 Initial Speed Detect (ISD)*

The ISD function is used to identify the initial condition of the motor and is enabled by setting ISD_EN to 1b. The initial speed, position and direction is determined by sensing the three phase voltages. ISD can be disabled by setting ISD_EN to 0b. If the function is disabled (ISD_EN set to 0b), the MCT8315A does not perform the initial speed detect function and proceeds to check if the brake routine (BRAKE_EN) is enabled.

#### *7.3.10.2 Motor Resynchronization*

The motor resynchronization function works when the ISD and resynchronization functions are both enabled and the device determines that the initial state of the motor is spinning in the forward direction (same direction as the commanded direction). The speed and position information measured during ISD are used to initialize the


Copyright © 2023 Texas Instruments Incorporated

drive state of the MCT8315A, which can transition directly into closed loop state without needing to stop the motor. In the MCT8315A, motor resynchronization can be enabled/disabled through RESYNC_EN bit. If motor resynchronization is disabled, the device proceeds to check if the motor coast (Hi-Z) routine is enabled.

#### *7.3.10.3 Reverse Drive*

The MCT8315A uses the reverse drive function to change the direction of the motor rotation when ISD_EN and RVS_DR_EN are both set to 1b and the ISD determines the motor spin direction to be opposite to that of the commanded direction. Reverse drive includes synchronizing with the motor speed in the reverse direction, reverse decelerating the motor through zero speed, changing direction, and accelerating in open loop in forward (or commanded) direction until the device transitions into closed loop in forward direction (see Figure 7-22). MCT8315A uses the same parameter values for open to closed loop handoff threshold (OPN_CL_HANDOFF_THR), open loop acceleration rates (OL_ACC_A1, OL_ACC_A2) and open loop current limit (OL_ILIMIT) in the reverse direction as in the forward direction..

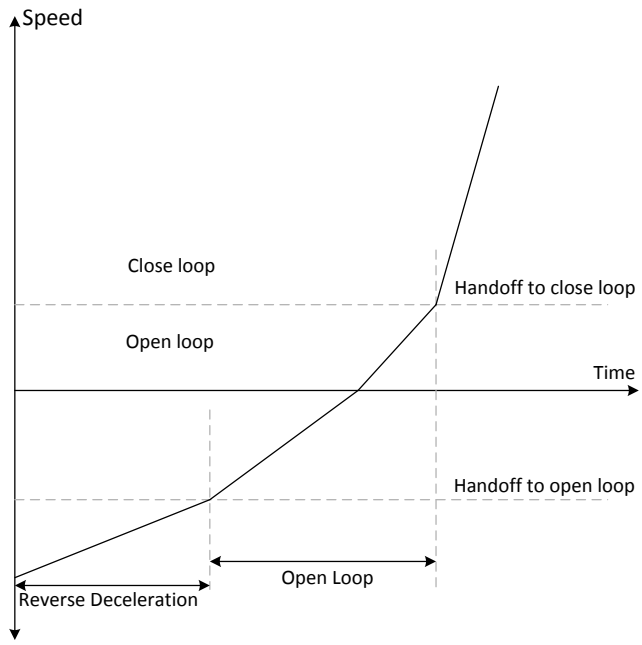


**Figure 7-22. Reverse Drive Function**

#### *7.3.10.4 Motor Start-up*

There are different options available for motor start-up from a stationary position and these options can be configured by MTR_STARTUP. In align and double align mode, the motor is aligned to a known position by injecting a DC current. In IPD mode, the rotor position is estimated by applying 6 different high-frequency pulses. In slow first cycle mode, the motor is started by applying a low frequency cycle.

##### 7.3.10.4.1 Align

Align is enabled by configuring MTR_STARTUP to 00b. The MCT8315A aligns the motor by injecting a DC current using a particular phase pattern (phase-C high-side FET and phase-B low-side FET are ON) - current flowing into phase-B and flowing out from phase-C for a certain time configured by ALIGN_TIME.

The duty cycle during align is defined by ALIGN_DUTY. In MCT8315A, current limit during align is configured by ALIGN_CURR_THR.

A fast change in the phase current during align may result in a sudden change in the driving torque and this could result in acoustic noise. To avoid this, the MCT8315A ramps up duty cycle from 0 to until it reaches ALIGN_DUTY at a configurable rate set by ALIGN_RAMP_RATE. At the end of align routine, the motor will be aligned at the known position.

Copyright © 2023 Texas Instruments Incorporated

#### 7.3.10.4.2 Double Align

Double align is enabled by configuring MTR_STARTUP to 01b. Single align is not reliable when the initial position of the rotor is 180º out of phase with the applied phase pattern. In this case, it is possible to have start-up failures using single align. In order to improve the reliabilty of align based start-up, the MCT8315A provides the option of double align start-up. In double align start-up, MCT8315A uses a phase pattern for the second align that is 60º out of phase with the first align phase pattern in the commanded direction. In double align, relevant parameters like align time, current limit, ramp rate are the same as in the case of single align - two different phase patterns are applied in succession with the same parameters to ensure that the motor will be aligned to a known position irrespective of initial rotor position.

#### 7.3.10.4.3 Initial Position Detection (IPD)

Initial Position Detection (IPD) can be enabled by configuring MTR_STARTUP to 10b. In IPD, inductive sense method is used to determine the initial position of the motor using the spatial variation in the motor inductance.

Align or double align may result in the motor spinning in the reverse direction before starting open loop acceleration. IPD can be used in such applications where reverse rotation of the motor is unacceptable. IPD does not wait for the motor to align with the commutation and therefore can allow for a faster motor start-up sequence. IPD works well when the inductance of the motor varies as a function of position. IPD works by pulsing current in to the motor and hence can generate acoustics which must be taken into account when determining the best start-up method for a particular application.

##### *7.3.10.4.3.1 IPD Operation*

IPD operates by sequentially applying six different phase patterns according to the following sequence: BC-> CB-> AB-> BA-> CA-> AC (see Figure 7-23). When the current reaches the threshold configured by IPD_CURR_THR, the MCT8315A stops driving the particular phase pattern and measures the time taken to reach the current threshold from when the particular phase pattern was applied. Thus, the time taken to reach IPD_CURR_THR is measured for all six phase patterns - this time varies as a function of the inductance in the motor windings. The state with the shortest time represents the state with the minimum inductance. The minimum inductance is because of the alignment of the north pole of the motor with this particular driving state.

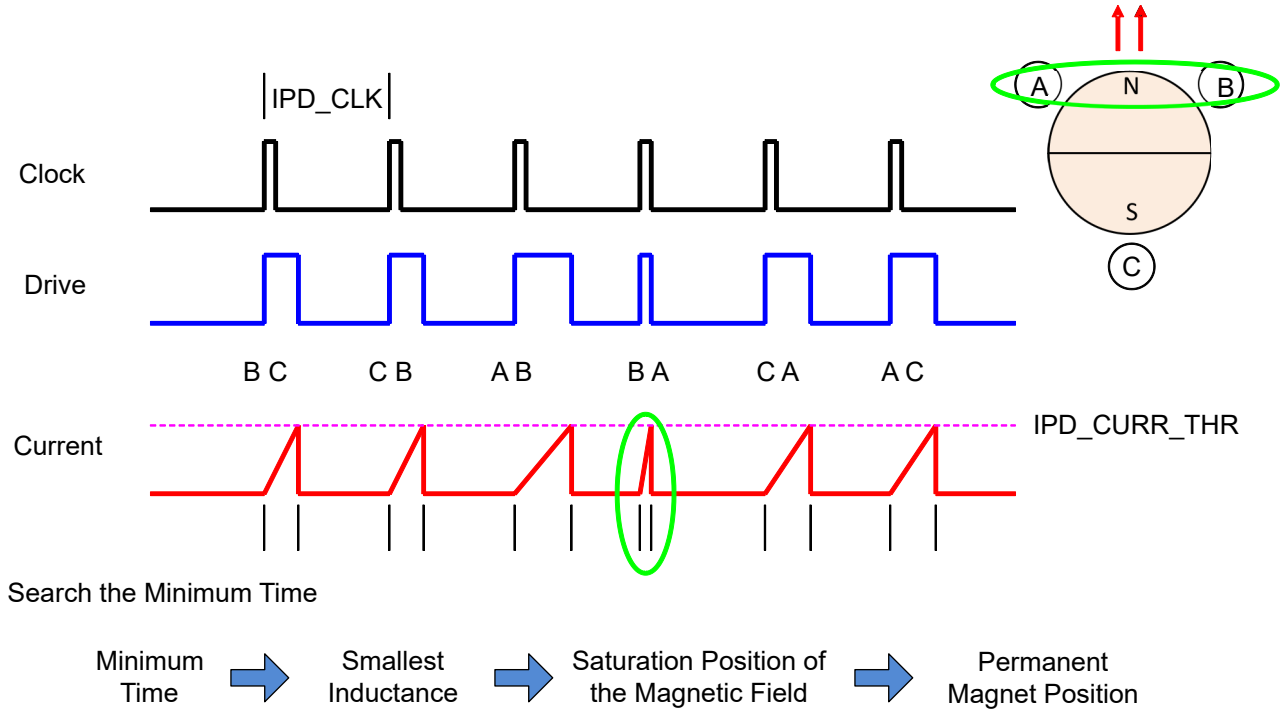


**Figure 7-23. IPD Function**


Copyright © 2023 Texas Instruments Incorporated

#### *7.3.10.4.3.2 IPD Release Mode*

Two modes are available for configuring the way the MCT8315A stops driving the motor when the current threshold is reached. The recirculate (or brake) mode is selected if IPD_RLS_MODE = 0b. In this configuration, the low-side (LSC) MOSFET remains ON to allow the current to recirculate between the MOSFET (LSC) and body diode (LSA) (see Figure 7-24). Hi-Z mode is selected if IPD_RLS_MODE = 1b. In Hi-Z mode, both the high-side (HSA) and low-side (LSC) MOSFETs are turned OFF and the current recirculates through the body diodes back to the power supply (see Figure 7-25).

In the Hi-Z mode, the phase current has a faster settle-down time, but that can result in a voltage increase on $V_M$. The user must manage this with an appropriate selection of either a clamp circuit or by providing sufficient capacitance between $V_M$ and PGND to absorb the energy. If the voltage surge cannot be contained or if it is unacceptable for the application, recirculate mode must be used. When using the recirculate mode, select the IPD_CLK_FREQ appropriately to give the current in the motor windings enough time to decay to 0-A before the next IPD phase pattern is applied.

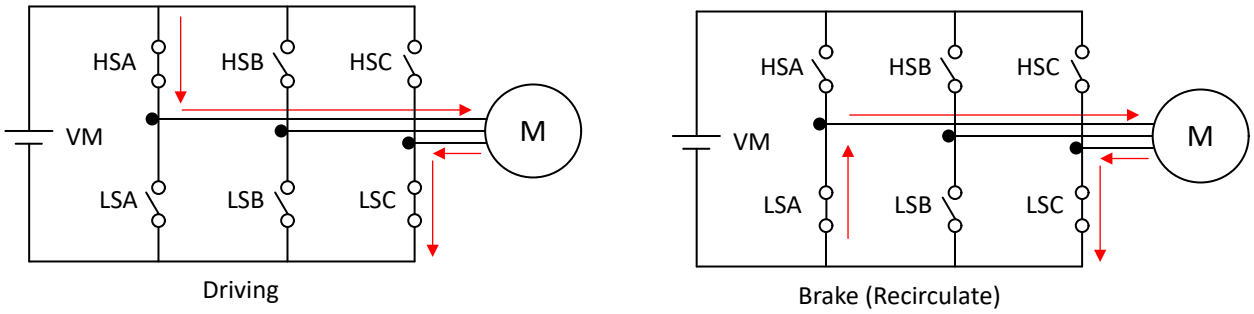


**Figure 7-24. IPD Release Mode - Brake (0b)**

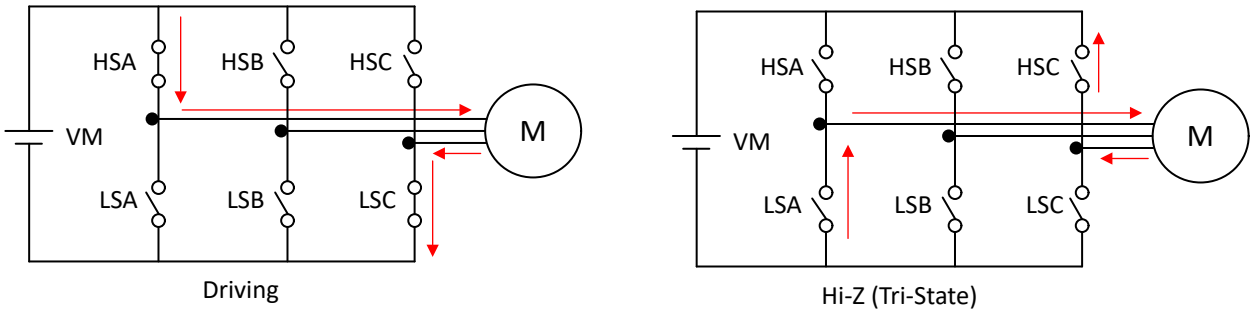


**Figure 7-25. IPD Release Mode - Tristate (1b)**

#### *7.3.10.4.3.3 IPD Advance Angle*

After the initial position is detected, the MCT8315A begins driving the motor in open loop at an angle specified by IPD_ADV_ANGLE.

Advancing the drive angle anywhere from 0° to 180° results in positive torque. Advancing the drive angle by 90° results in maximum initial torque. Applying maximum initial torque could result in uneven acceleration to the rotor. Select the IPD_ADV_ANGLE to allow for smooth acceleration in the application (see Figure 7-26).

Copyright © 2023 Texas Instruments Incorporated

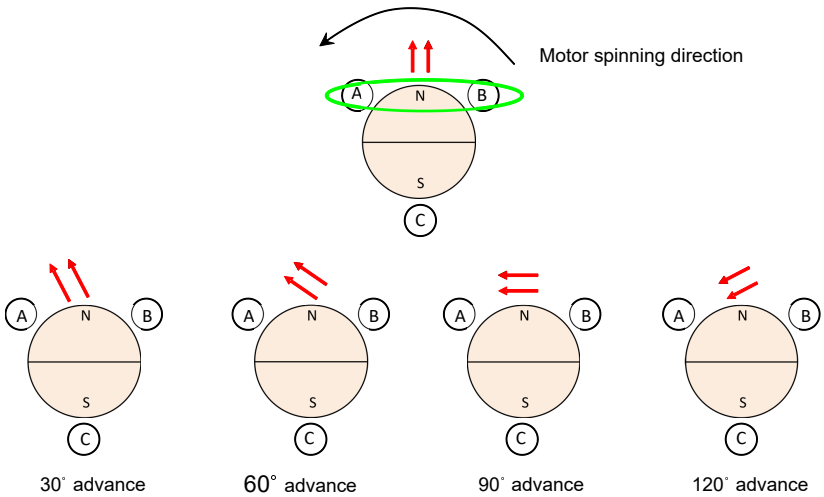


**Figure 7-26. IPD Advance Angle**

#### 7.3.10.4.4 Slow First Cycle Startup

Slow First Cycle start-up is enabled by configuring MTR_STARTUP to 11b. In slow first cycle start-up, the MCT8315A starts motor commutation at a frequency defined by SLOW_FIRST_CYCLE_FREQ. The frequency configured is used only for first cycle, and then the motor commutation follows acceleration profile configured by open loop acceleration coefficients A1 and A2. The slow first cycle frequency has to be configured to be slow enough to allow motor to synchronize with the commutation sequence. This mode is useful when fast startup is desired as it significantly reduces the align time.

#### 7.3.10.4.5 Open loop

Upon completing the motor position initialization with either align, double align, IPD or slow first cycle, the MCT8315A begins to accelerate the motor in open loop. During open loop, fixed duty cycle is applied and the cycle by cycle current limit functionality is used to regulate the current.

In MCT8315A, open loop current limit threshold is selected through OL_ILIMIT_CONFIG and is set either by CBC_ILIMIT or OL_ILIMIT based on the configuration of OL_ILIMIT_CONFIG. Open loop duty cycle is configured through OL_DUTY. While the motor is in open loop, speed (and commutation instants) is determined by Equation 4. In MCT8315A, open loop acceleration coefficients, A1 and A2 are configured through OL_ACC_A1 and OL_ACC_A2 respectively. The function of the open-loop operation is to drive the motor to a speed at which the motor generates sufficient BEMF to allow the BEMF zero-crossing based commutation control to accurately drive the motor.

$$\text{Speed}(t) = A1 * t + 0.5 * A2 * t^2 \quad (4)$$

#### 7.3.10.4.6 Transition from Open to Closed Loop

MCT8315A has an internal mechanism to determine the motor speed for transition from open loop commutation to BEMF zero crossing based closed loop commutation. This feature of automatically deciding the open to closed handoff speed can be enabled by configuring AUTO_HANDOFF to 1b. If AUTO_HANDOFF is set to 0b, the open to closed loop handoff speed needs to be configured by OPN_CL_HANDOFF_THR. The closed loop in this section does not refer to closed speed loop - it refers to the commutation control changing from open loop (equation based) to closed loop (BEMF zero crossing based).

### 7.3.11 Closed Loop Operation

In closed loop operation, the MCT8315A drives the motor using trapezoidal commutation. The commutation instant is determined by the BEMF zero crossing on the phase which is not driven (Hi-Z). The duty cycle of the applied motor voltage is determined by DUTY OUT (see Speed Control).


Copyright © 2023 Texas Instruments Incorporated

#### *7.3.11.1 120º Commutation*

In 120º commutation, each phase is driven for 120º and is Hi-Z for 60º within each half electrical cycle as shown in Figure 7-27. In 120º commutation there are six different commutation states. 120º commutation can be configured by setting COMM_CONTROL to 00b. MCT8315A supports different modulation modes with 120º commutation which can be configured through PWM_MODUL.

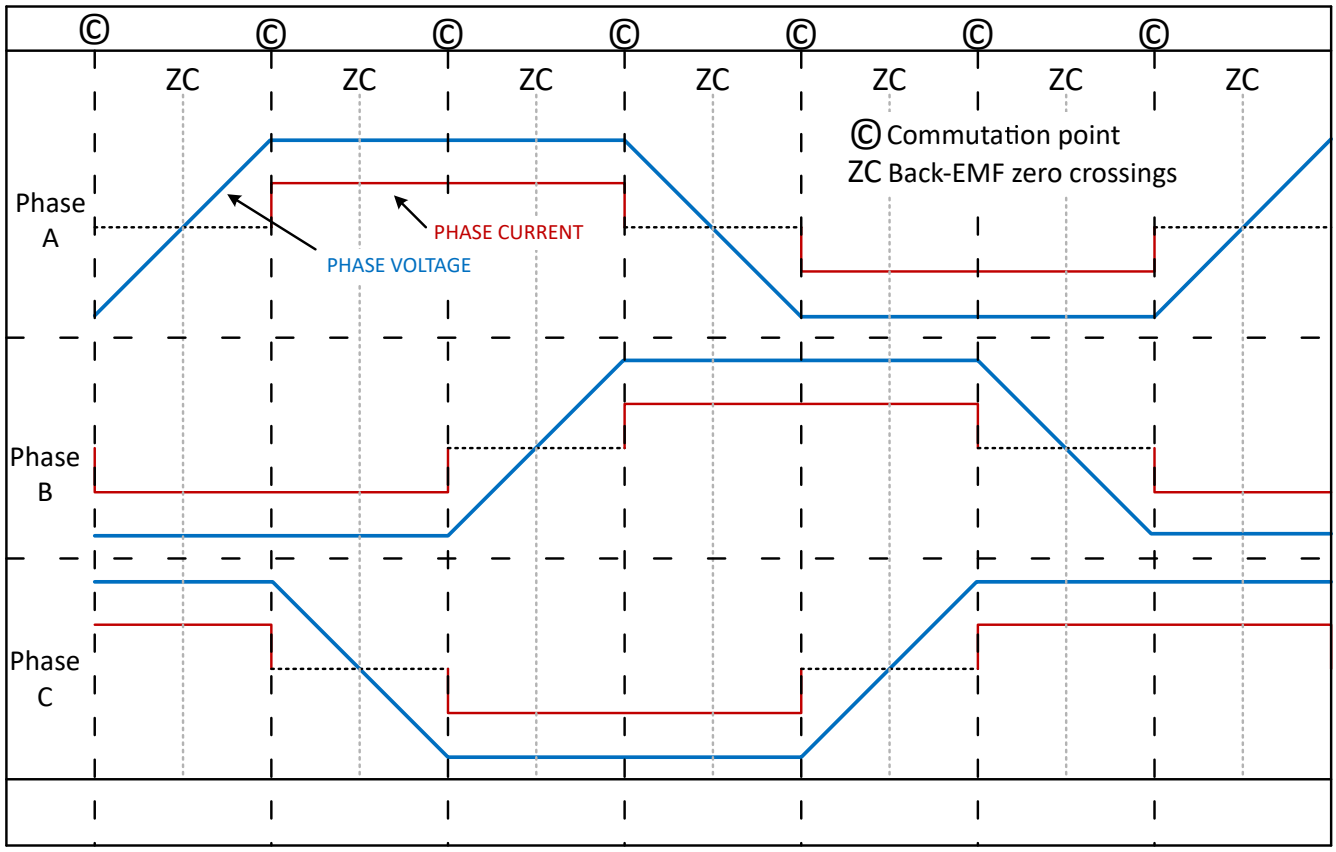


**Figure 7-27. 120º commutation**

##### 7.3.11.1.1 High-Side Modulation

High-side modulation can be configured by setting PWM_MODUL to 00b. In high-side modulation, for a given commutation state, one of the high-side FETs is switching with the commanded duty cycle DUTY_OUT, while the low-side FET is ON with 100% duty cycle (see Figure 7-28).

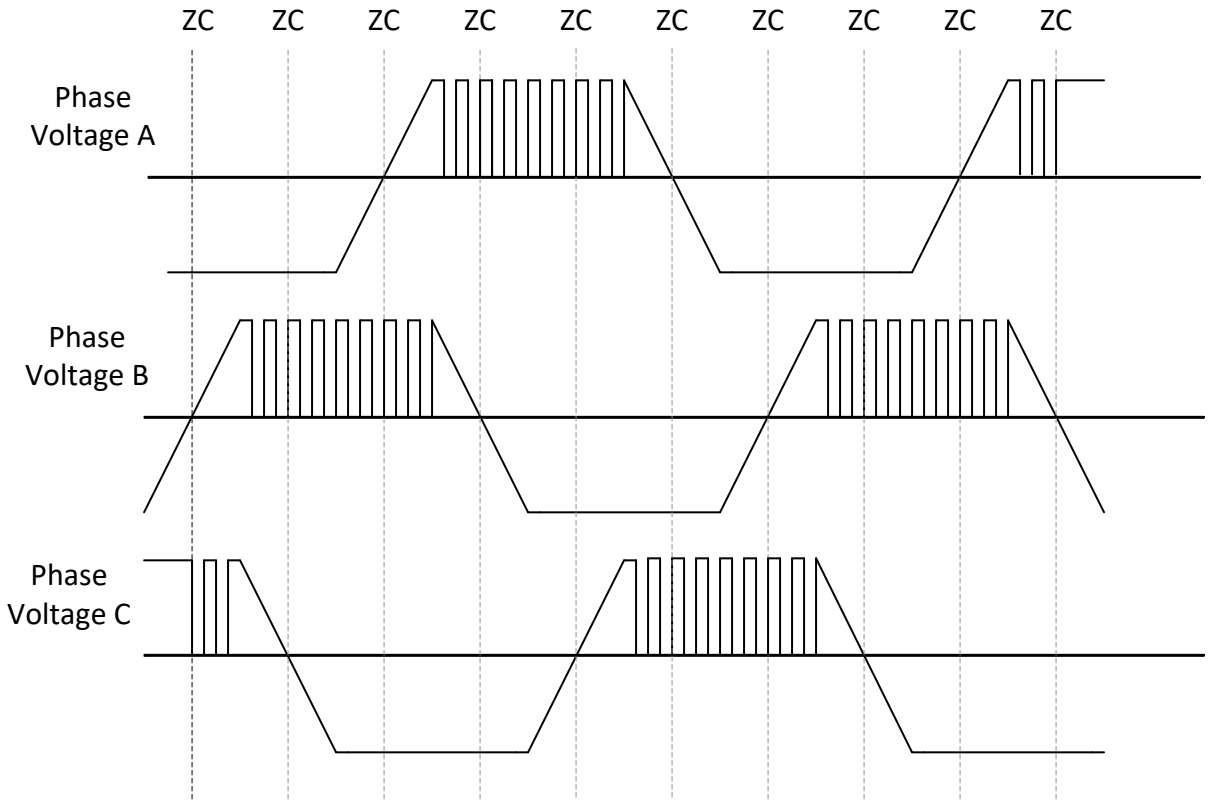


**Figure 7-28. 120° commutation in High Side Modulation Mode**

#### 7.3.11.1.2 Low-Side Modulation

Low-side modulation can be configured by setting PWM_MODUL to 01b. In low-side modulation, for a given commutation state, one of the low-side FETs is switching with the commanded duty cycle DUTY_OUT, while the high-side FET is ON with 100% duty cycle (see Figure 7-29).


Copyright © 2023 Texas Instruments Incorporated

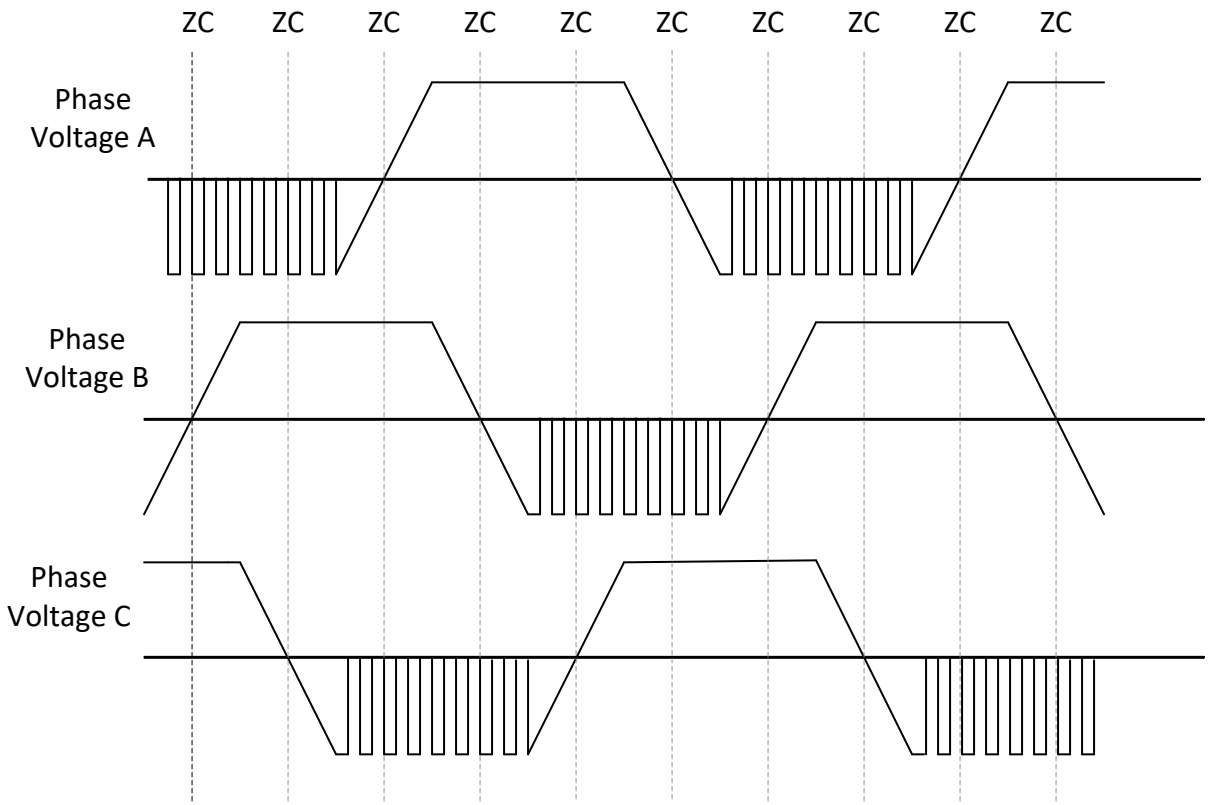


**Figure 7-29. 120 º commutation in Low Side Modulation Mode**

#### 7.3.11.1.3 Mixed Modulation

Mixed modulation can be configured by setting PWM_MODUL to 10b. In mixed modulation, MCT8315A dynamically switches between high and low-side modulation (see Figure 7-30). The switching losses are distributed evenly amongst the high and low-side MOSFETs in mixed modulation mode.

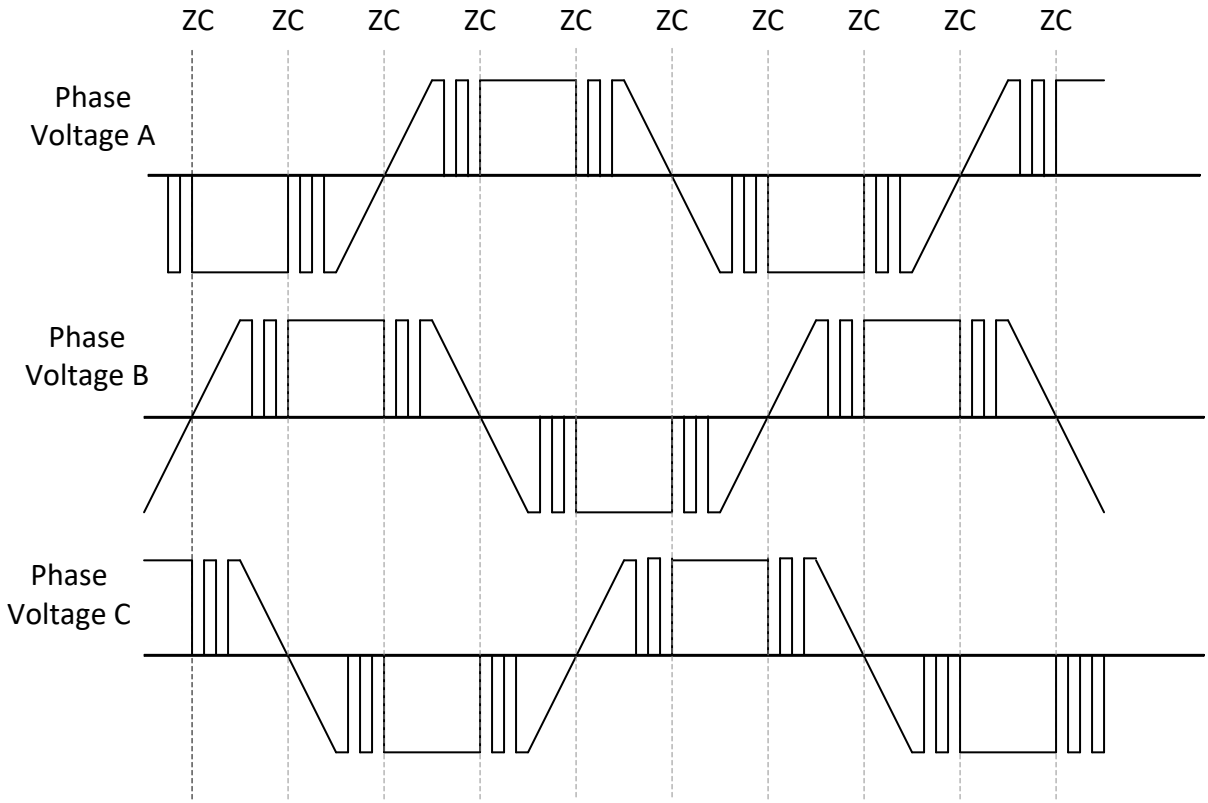


**Figure 7-30. 120° commutation in Mixed Modulation Mode**

### *7.3.11.2 Variable Commutation*

Variable commutation can be configured by setting COMM_CONTROL to 01b. 120° commutation may result in acoustic noise due to the long Hi-Z period causing some torque ripple in the motor. In order to reduce this torque ripple and acoustic noise, the MCT8315A uses variable commutation to reduce the phase current ripple at commutation by extending 120° driving time and gradually decreasing duty cycle prior to entering Hi-Z state. In this mode, the phase is Hi-Z between 30° and 60° and this window size is dynamically adjusted based on speed. A smaller window size will typically give better acoustic performance. Figure 7-31 shows 150° commutation with 30° window size.


Copyright © 2023 Texas Instruments Incorporated

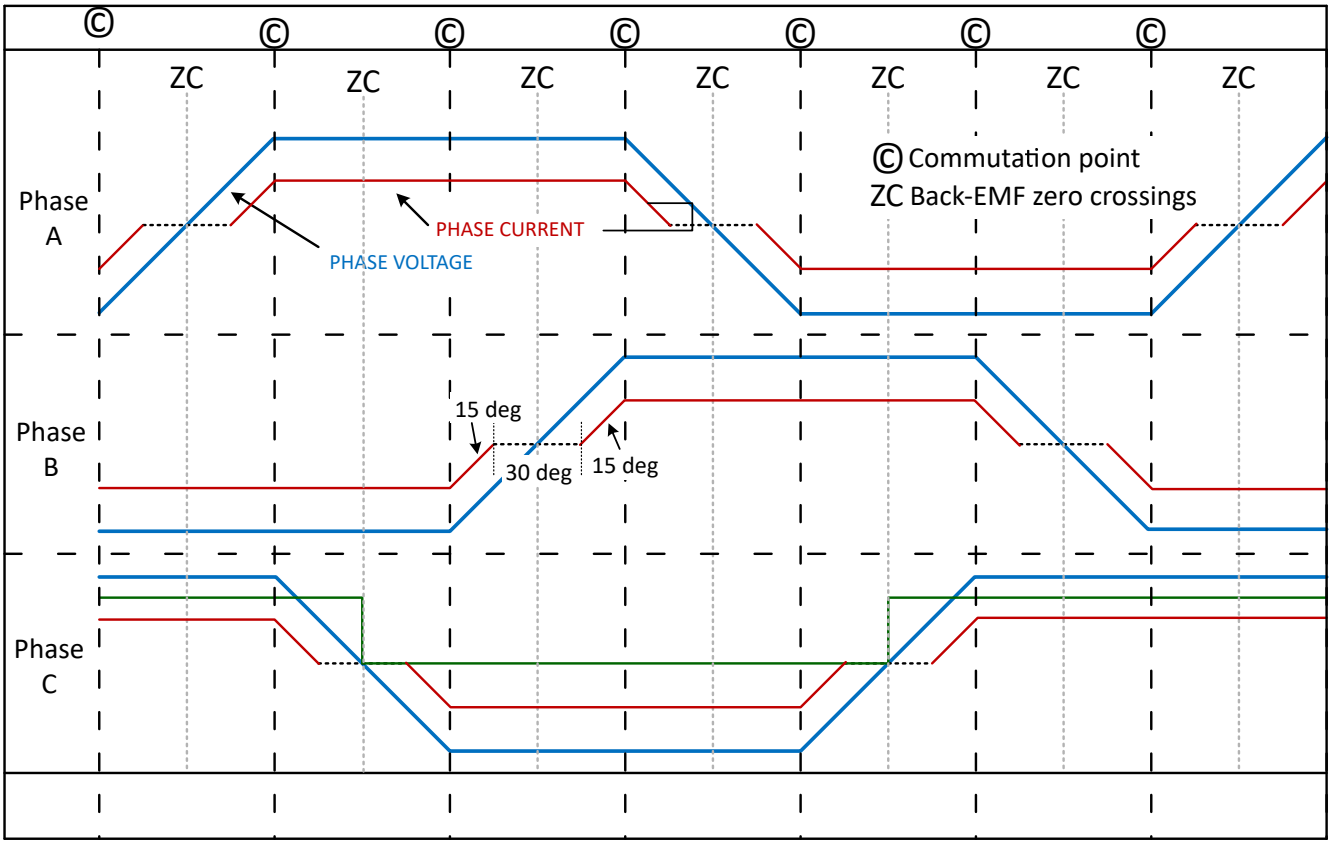


**Figure 7-31. 150° commutation**

**Note**

Different modulation modes are supported only with 120° commutation; variable commutation uses mixed modulation mode only.

### *7.3.11.3 Lead Angle Control*

To achieve the best efficiency, it is often desirable to control the drive state of the motor so that the motor phase current is aligned with the motor BEMF voltage. MCT8315A provides the option to advance or delay the phase voltage from the commutation point by adjusting the lead angle. The lead angle can be adjusted to obtain optimal efficiency. This can be accomplished by operating the motor at constant speed and load conditions and adjusting the lead angle (LD_ANGLE) until the minimum current is achieved. The MCT8315A has the capability to apply both positive and negative lead angle (by configuring LD_ANGLE_POLARITY) as shown in Figure 7-32

Lead angle can be calculated by {LD_ANGLE x 0.12}°; for example, if the LD_ANGLE is 0x1E and LD_ANGLE_POLARITY is 1b, then a lead angle of +3.6°(advance) is applied. If LD_ANGLE_POLARITY is 0b, then a lead angle of -3.6°(delay) is applied.

**Note**

For 120° commutation, the negative lead angle is limited to -20°; any lead angle lower than that will be clamped to -20°.

For variable commutation, negative lead angle is not supported and positive lead angle is limited to +15°. Anything configured higher than +15° or lower than $0^0$ will be clamped to 15° and 0° respectively.

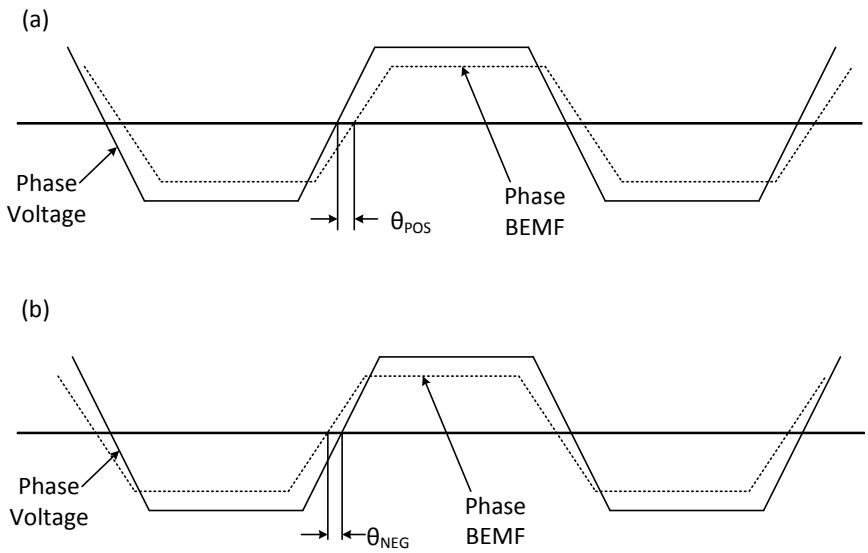


**Figure 7-32. Positive and Negative Lead Angle Definition**

#### *7.3.11.4 Closed loop accelerate*

To prevent sudden changes in the torque applied to the motor which could result in acoustic noise, the MCT8315A device provides the option of limiting the maximum rate at which the speed command can change. The closed loop acceleration rate parameter sets the maximum rate at which the speed command changes (shown in Figure 7-33). In the MCT8315A, closed loop acceleration rate is configured through CL_ACC.

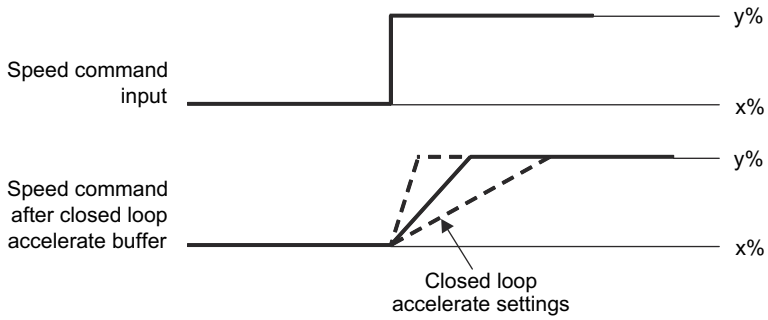


**Figure 7-33. Closed loop accelerate**

### 7.3.12 Speed Loop

MCT8315A has a speed loop option which can be used to maintain constant speed under varying operating conditions. Speed loop is enabled by setting CLOSED_LOOP_MODE to 01b. $K_p$ and $K_i$ coefficients are configured through SPD_POWER_KP and SPD_POWER_KI. The output of speed loop (SPEED_PI_OUT) is used to generate the DUTY_OUT (see Figure 7-13). The PI controller output upper ($V_{MAX}$) and lower bound ($V_{MIN}$) saturation limits are configured through SPD_POWER_V_MAX and SPD_POWER_V_MIN respectively. When output of the speed loop saturates, the integrator is disabled to prevent integral wind-up. The speed loop PI controller is as in Figure 7-34.

SPEED_REF is derived from duty command input and maximum motor speed (MAX_SPEED) configured by user (see Equation 5). In speed loop mode, minimum SPEED_REF is set by MIN_DUTY * MAX_SPEED.

$$\text{SPEED_REF} = \text{DUTY_CMD} * \text{MAX_SPEED} \quad (5)$$


Copyright © 2023 Texas Instruments Incorporated

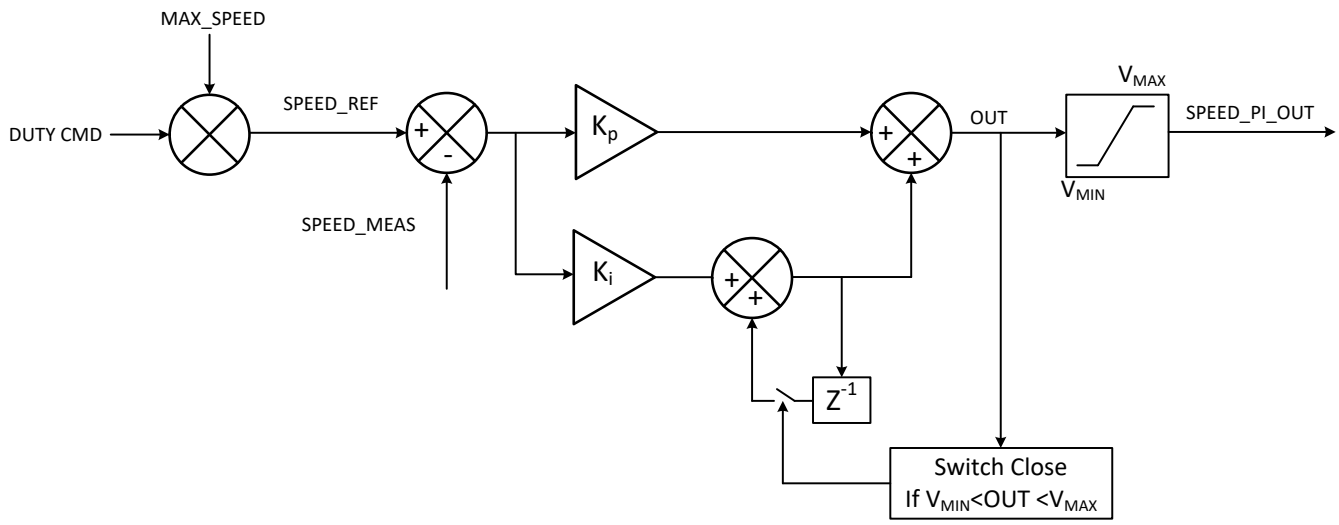


**Figure 7-34. Speed Loop**

### 7.3.13 Input Power Regulation

MCT8315A provides an option of regulating the (input) power instead of motor speed - this input power regulation can be done in two modes, namely, closed loop power control and power limit control. Input power regulation (instead of motor speed) mode is selected by setting CLOSED_LOOP_MODE to 10b. This should be accompanied by setting CONST_POWER_MODE to 01b for closed loop power control or to 10b for power limit control. In either of the power regulation modes, the maximum power that MCT8315A can draw from the DC input supply is set by MAX_POWER - the power reference (POWER_REF in Figure 7-35) varies as function of the duty command input (DUTY CMD) and MAX_POWER as given by Equation 6. The hysteresis band for the power reference is set by CONST_POWER_LIMIT_HYST. In both the power regulation modes, the minimum power reference is set by MIN_DUTY x MAX_POWER.

$$\text{POWER_REF} = \text{DUTY CMD} \times \text{MAX_POWER} \quad (6)$$

In both the power regulation modes, MCT8315A uses the same PI controller parameters as in the speed loop mode. $K_p$ and $K_i$ coefficients are configured through SPD_POWER_KP and SPD_POWER_KI. The PI controller output upper ($V_{MAX}$) and lower bound ($V_{MIN}$) saturation limits are configured through SPD_POWER_V_MAX and SPD_POWER_V_MIN respectively. The key difference between closed loop power control and power limit control is in when the PI controller decides the DUTY OUT (see Figure 7-13) applied to FETs. In closed loop power control, DUTY OUT is always equal to POWER_PI_OUT from the PI controller output in Figure 7-35. However, in power limit control, the PI controller decides the DUTY OUT only if POWER_MEAS > POWER_REF + CONST_POWER_LIMIT_HYST. If POWER_MEAS < POWER_REF + CONST_POWER_LIMIT_HYST, the PI controller is not used and DUTY OUT is equal to DUTY CMD. Essentially, in closed loop power control, input power is always actively regulated to POWER_REF whereas, in power limit control, input power is only limited to POWER_REF and not actively regulated to POWER_REF. When output of the power PI loop saturates, the integrator is disabled to prevent integral wind-up.

Copyright © 2023 Texas Instruments Incorporated

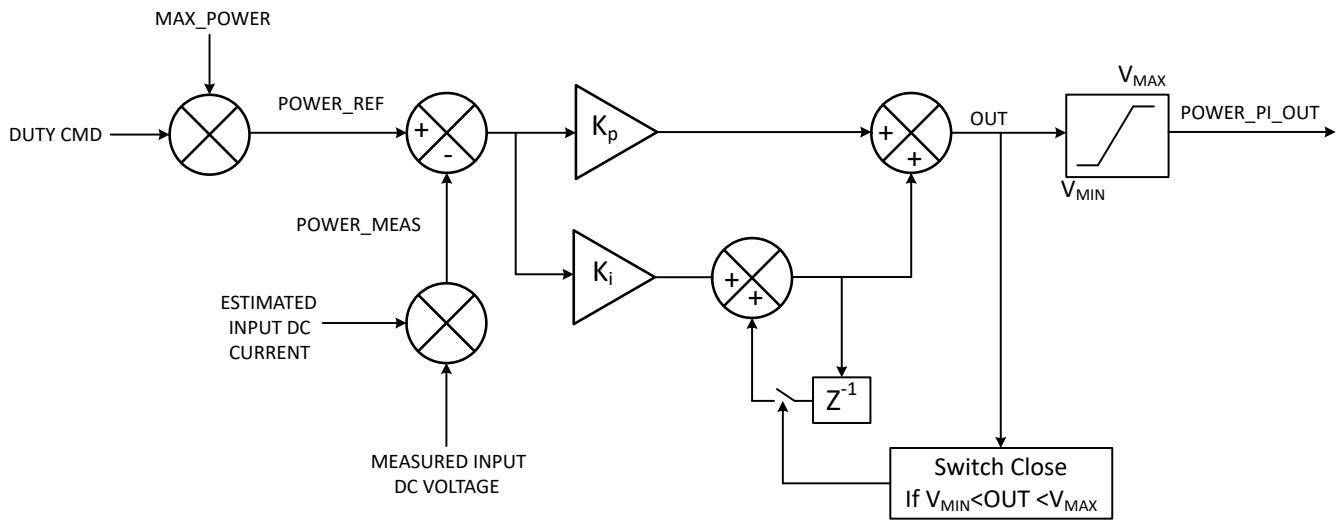


**Figure 7-35. Power Regulation**

### 7.3.14 Anti-Voltage Surge (AVS)

When a motor is driven, energy is transferred from the power supply into the motor. Some of this energy is stored in the form of inductive and mechanical energy. If the speed command suddenly drops such that the BEMF voltage generated by the motor is greater than the voltage that is applied to the motor, then the mechanical energy of the motor is returned to the power supply and the $V_M$ voltage surges. The AVS feature works to prevent this voltage surge on $V_M$ and can be enabled by setting AVS_EN to 1b. AVS can be disabled by setting AVS_EN to 0b. When AVS is disabled, the deceleration rate is configured through CL_DEC_CONFIG

### 7.3.15 Output PWM Switching Frequency

MCT8315A provides the option to configure the output PWM switching frequency of the MOSFETs through PWM_FREQ_OUT. PWM_FREQ_OUT has range of 5-100 kHz. In order to select optimal output PWM switching frequency, user has to make tradeoff between the current ripple and the switching losses. Generally, motors having lower L/R ratio require higher PWM switching frequency to reduce current ripple.

### 7.3.16 Fast Start-up (< 50 ms)

MCT8315A has the capability to accelerate a motor from 0 to 100% speed within 50ms. This will only work on low inertia motors which are capable of this level of acceleration. In order to achieve fast start-up, the commutation instant detection needs to be configured to hybrid mode by setting INTEG_ZC_METHOD to 1b. In the hybrid mode, the commutation instant is determined by using back-EMF integration at low-medium speeds and by using built-in comparators (BEMF zero crossing) at higher speeds. MCT8315A automatically transitions between back-EMF integration and comparator based commutation depending on the motor speed as shown in Figure 7-36. The duty cycles for commutation method transition at lower speeds are directly configured by INTEG_DUTY_THR_LOW and INTEG_DUTY_THR_HIGH and at higher speeds are indirectly configured by INTEG_CYC_THR_LOW and INTEG_CYC_THR_HIGH. These duty cycles should be configured to provide a sufficient hysteresis band to avoid repeated commutation method transitions near threshold duty cycles. The BEMF threshold values used to determine the commutation instant in the back-EMF integration method are configured by BEMF_THRESHOLD1 and BEMF_THRESHOLD2.


Copyright © 2023 Texas Instruments Incorporated

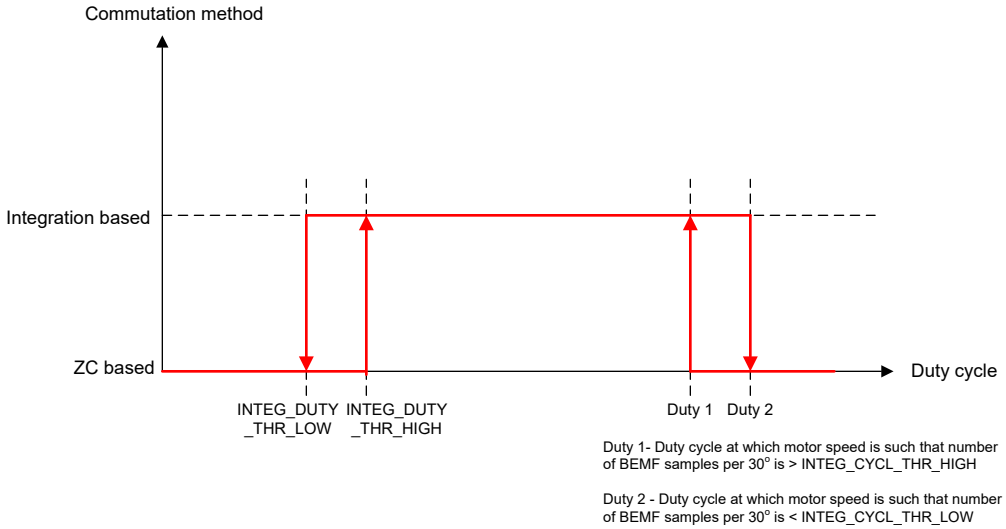


**Figure 7-36. Commutation Method Transition**

#### *7.3.16.1 BEMF Threshold*

Figure 7-37 shows the three-phase voltages during 120° trapezoidal operation. It is seen that one of the phases will always be floating within a 60° commutation interval and MCT8315A integrates this floating phase voltage (which denotes the motor back-EMF) in the back-EMF integration method to detect the next commutation instant. The floating phase voltage can either be increasing or decreasing and the algorithm starts the integration after the zero cross detection in order to eliminate integration errors due to variable degauss time. The floating phase voltage is periodically sampled (after zero cross) and added (discrete form of integration). BEMF threshold (BEMF_THRESHOLD1 and BEMF_THRESHOLD2) value is set such that the integral value of the floating phase voltage crosses the BEMF_THRESHOLD1 or BEMF_THRESHOLD2 value at (or very near) to the commutation instant. BEMF_THRESHOLD1 is the threshold for rising floating phase voltage and BEMF_THRESHOLD2 is the threshold for falling floating phase voltage. If BEMF_THRESHOLD2 is set to 0, then BEMF_THRESHOLD1 is used as the threshold for both rising and falling floating phase voltage.

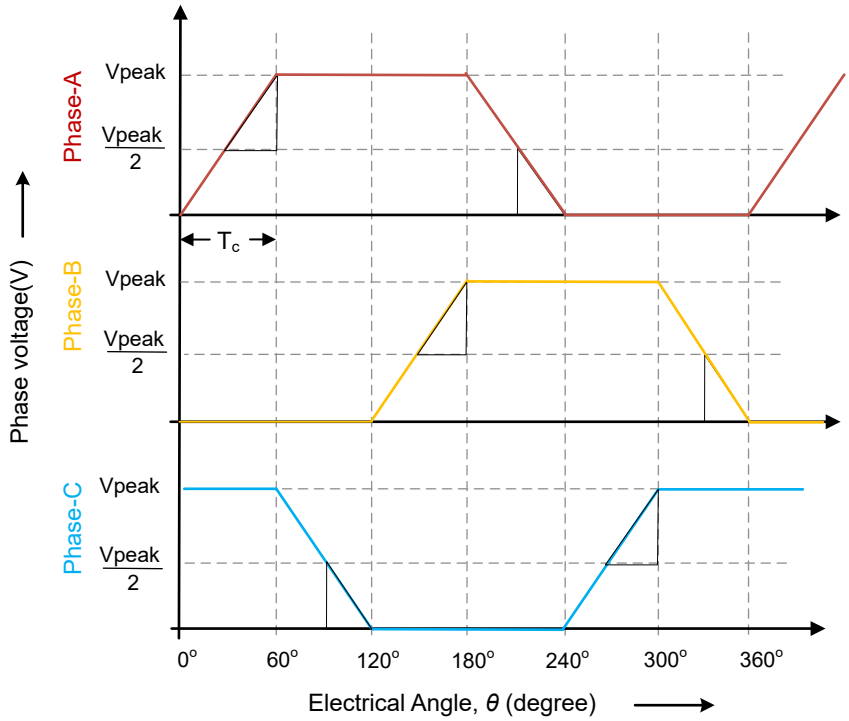


**Figure 7-37. Back-EMF integration using floating phase voltage**

In Figure 7-37 , Vpeak is the peak-peak value of the back-EMF , Vpeak/2 denotes the zero cross of the back-EMF and Tc is the commutation interval or time period of the 60° window. The highlighted triangle in each 60° window is the integral value of back-EMF used by the algorithm to determine the commutation instant. This integral value, which can be approximated as the area of the highlighted triangle, is given by Equation 7.

$$(½)^* (Vpeak/2) * Tc/2 \quad (7)$$

See for an example application on setting the BEMF threshold.

#### *7.3.16.2 Dynamic Degauss*

In MCT8315A, the degauss time can be dynamically computed after the commutation for a precise detection of the zero crossing instant. This is done by enabling the dynamic degauss feature (DYN_DEGAUSS_EN is set to 1b). This feature allows the motor control algorithm to capture the zero crossing instant after the outgoing (floating) phase voltage is completely settled; that is, when the outgoing phase current has decayed to zero and the outgoing (floating) phase voltage is not clamped (to either VM or PGND) and represents the true back-EMF. This accurate measurement of zero cross instant allows fast acceleration of the motors (< 50ms) using MCT8315A.


Copyright © 2023 Texas Instruments Incorporated

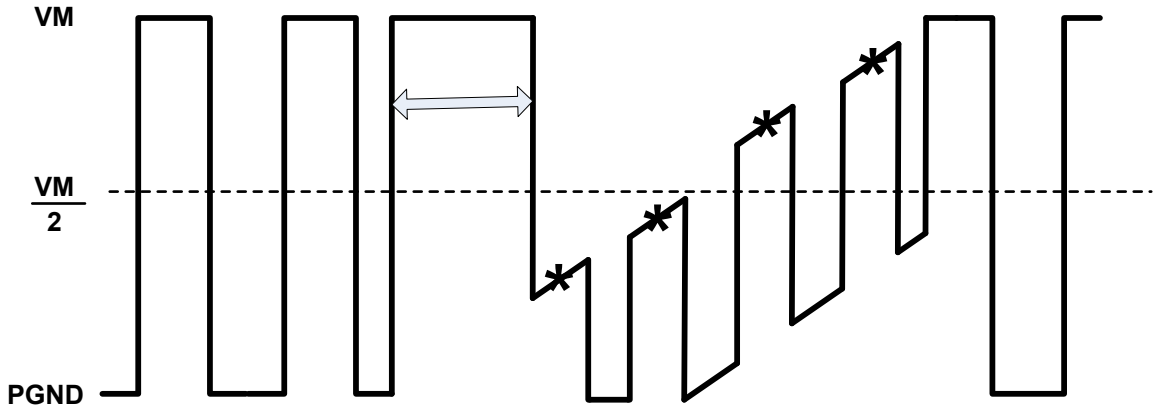


Degauss time(shown by double-sided arrow) after commutation during which the outgoing(floating) phase voltage is clamped to VM(by negative outgoing phase current) during increasing back-EMF; sampling of back-EMF(denoted by *) should start after degauss time is over for accurate zero cross instant detection

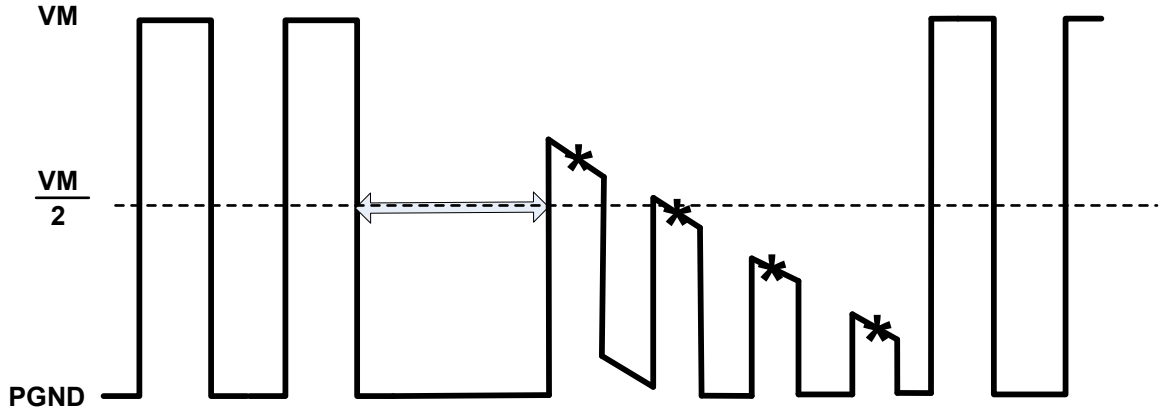


Degauss time(shown by double-sided arrow) after commutation during which the outgoing(floating) phase voltage is clamped to PGND(by positive outgoing phase current) during decreasing back-EMF; sampling of back-EMF(denoted by *) should start after degauss time is over for accurate zero cross instant detection

**Figure 7-38. Degauss Time**

### 7.3.17 Fast Deceleration

MCT8315A has the capability to decelerate a motor quickly (100% to 10% speed reduction within tens of ms) without pumping energy back into the input DC supply using the fast deceleration feature in conjunction with the AVS feature. The fast deceleration feature can be enabled by setting FAST_DECEL_EN to 1b; AVS_EN should be set to 1b to prevent energy pump-back into the input DC supply. This combination enables a linear braking effect resulting in a fast and smooth speed reduction without energy pump-back into the DC input supply. This feature combination can also be used during reverse drive (see Reverse Drive) or motor stop (see Active Spin-Down) to reduce the motor speed quickly without energy pump-back into the DC input supply.

The deceleration time can be controlled by appropriately configuring the current limit during deceleration, FAST_DECEL_CURR_LIM. A higher current limit results in a lower deceleration time and vice-versa. A higher than necessary current limit setting may result in motor stall faults, at low target speeds, due to excessive braking torque. This can also lead to higher losses in MCT8315A, especially in repeated acceleration-deceleration cycles. Therefore, the FAST_DECEL_CURR_LIM should be chosen appropriately, so as to decelerate within the required time without resulting in stall faults or overheating.

FAST_BRK_DELTA is used to configure the target speed hysteresis band to exit the fast deceleration mode and re-enter motoring mode when motor reaches the target speed. For example, if FAST_BRK_DELTA is set to 1%, the fast deceleration is deemed complete when motor speed reaches within 1% of target speed. Setting a higher

Copyright © 2023 Texas Instruments Incorporated

value for FAST_BRK_DELTA may eliminate motor stall faults, especially when high FAST_DECEL_CURR_LIM values are used. Setting a higher value for FAST_BRK_DETLA will also result in higher speed error between target speed and motor speed at the end of deceleration mode - motor will eventually reach the target speed once motoring mode is resumed. FAST_DECEL_CURR_LIM and FAST_BRK_DELTA should be configured in tandem to optimize between lower deceleration time and reliable (no stall faults) deceleration profile.

FAST_DEC_DUTY_THR configures the speed below which fast deceleration will be implemented. For example, if FAST_DEC_DUTY_THR is set to 70%, any deceleration from speeds above 70% will not use fast deceleration until the speed goes below 70%. FAST_DEC_DUTY_WIN is used to set the minimum deceleration window (initial speed - target speed) below which fast deceleration will not be implemented. For example, if FAST_DEC_DUTY_WIN is set to 15% and 50%->40% deceleration command is received, fast deceleration is not used to reduce the speed from 50% to 40% since the deceleration window (10%) is smaller than FAST_DEC_DUTY_WIN.

MCT8315A provides a dynamic current limit option during fast deceleration to improve the stability of fast deceleration when braking to very low speeds; using this feature the current limit during fast deceleration can be reduced as the motor speed decreases. This feature can be enabled by setting DYNAMIC_BRK_CURR to 1b. The current limit at the start of fast deceleration (at FAST_DEC_DUTY_THR) is configured by FAST_DECEL_CURR_LIM and the current limit at zero speed is configured by DYN_BRK_CURR_LOW_LIM; the current limit during fast deceleration varies linearly with speed between these two operating points when dynamic current limit is enabled. If dynamic current limit is disabled, current limit during fast deceleration stays constant and is configured by FAST_DECEL_CURR_LIM.

### 7.3.18 Active Demagnetization

MCT8315A has smart rectification features (active demagnetization) which decreases power losses in the device by reducing diode conduction losses. When this feature is enabled, the device automatically turns ON the corresponding MOSFET whenever it detects diode conduction. This feature can be enabled by configuring EN_ASR.

**Note**

EN_ASR needs to be set to 1b to enable active demagnetization.

The MCT8315A device includes a high-side (AD_HS) and low-side (AD_LS) comparator which detects the negative flow of current in the device on each half-bridge. The AD_HS comparator compares the sense-FET output with the supply voltage (VM) threshold, whereas the AD_LS compatator compares with the ground (0-V) threshold. Depending upon the flow of current from OUTx to VM or PGND to OUTx, the AD_HS or the AD_LS comparator trips. These comparator outputs provide a reference point for the operation of active demagnetization feature.


Copyright © 2023 Texas Instruments Incorporated

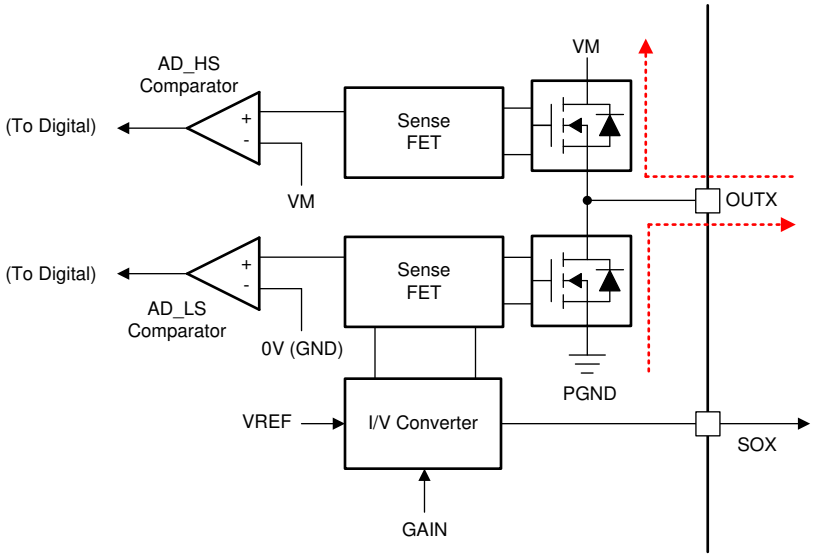


**Figure 7-39. Active Demagnetization Operation**

### *7.3.18.1 Active Demagnetization in action*

Figure 7-40 shows the operation of active demagnetization during the BLDC motor commutation. As shown in Figure 7-40 (a), the current is flowing from HA to LC in one commutation state. During the commutation change over as shown in Figure 7-40 (b), the HB FET is turned ON (and HA FET is turned OFF), and the commutation current (due to motor inductance) in OUTA flows through the body diode of LA. This results in a higher diode loss depending on the commutation current. This commutation loss is reduced by turning on the LA FET for the commutation time as shown in Figure 7-40 (c).

Similarly, the active demagnetization operation of a high-side FET is realized in Figure 7-40 (d), (e) and (f).

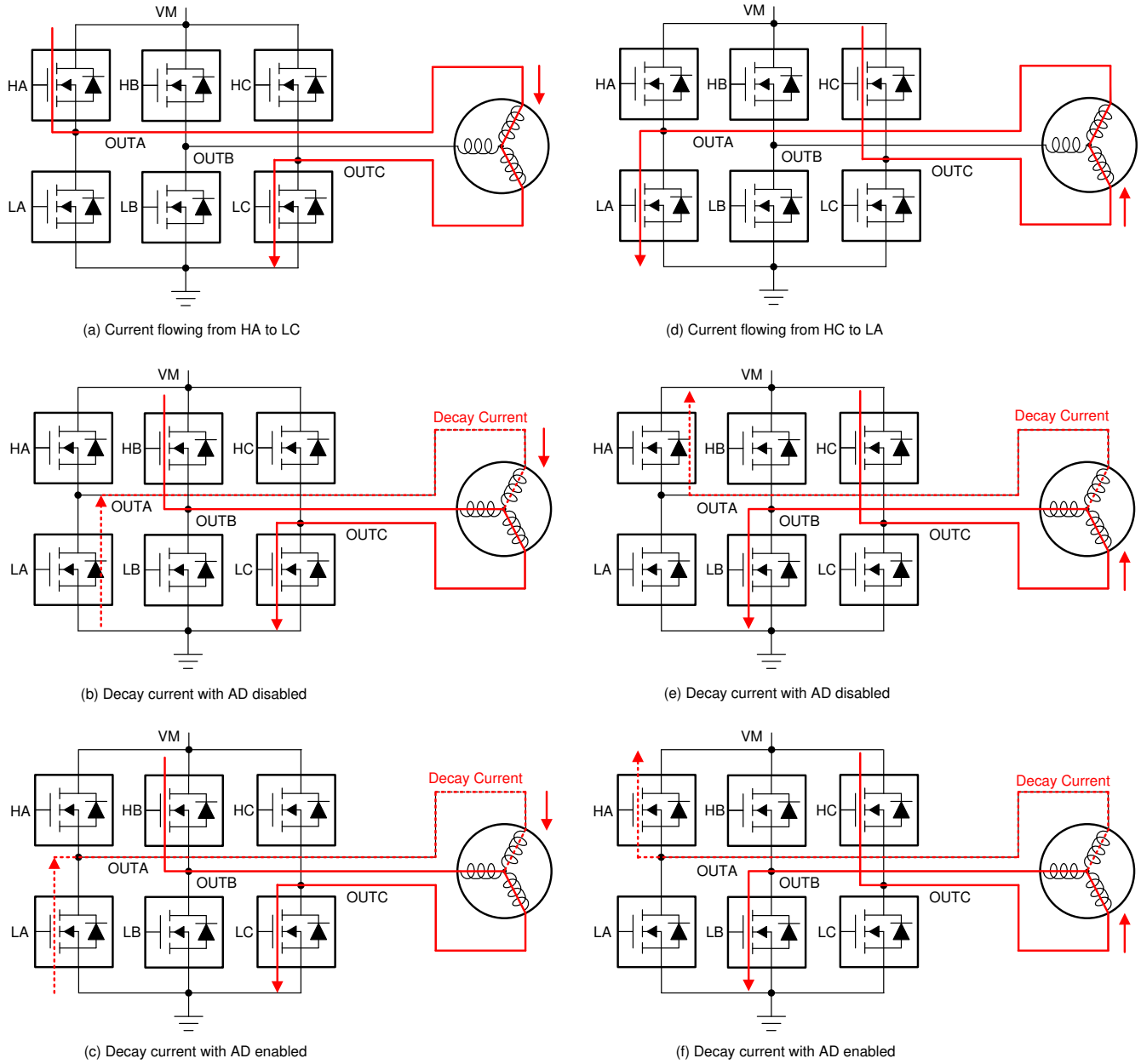


(a) Current flowing from HA to LC

(b) Decay current with AD disabled

(c) Decay current with AD enabled

(d) Current flowing from HC to LA

(e) Decay current with AD disabled

(f) Decay current with AD enabled

**Figure 7-40. Active Demagnetization in BLDC Motor Commutation**


Copyright © 2023 Texas Instruments Incorporated

Figure 7-41 (a) shows the BLDC motor phase current waveforms with Active Demagnetization with trapezoidal commutation. This figure shows the operation of various switches in a single commutation cycle.

Figure 7-41 (b) shows the zoomed waveform of commutation cycle.

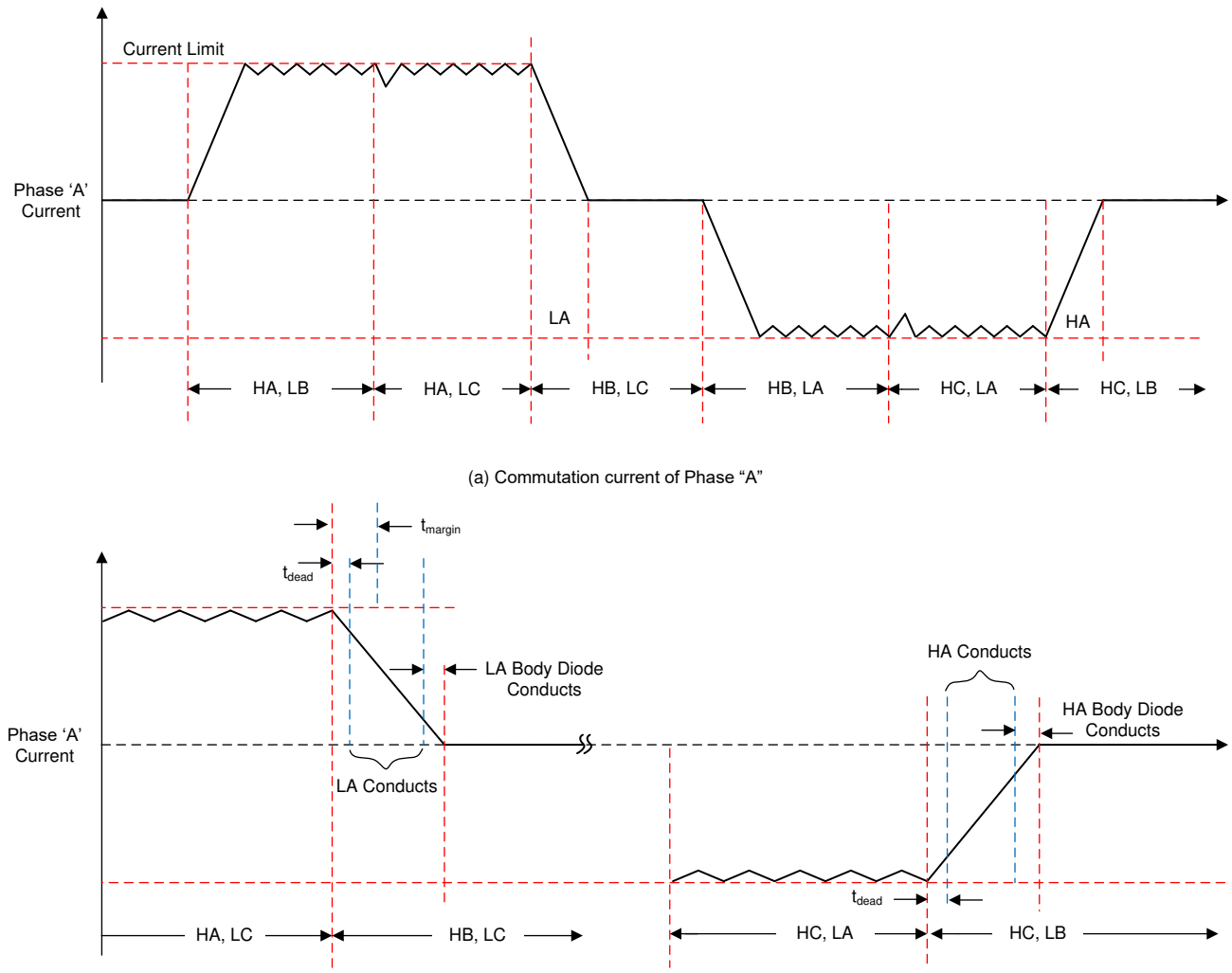


**Figure 7-41. Current Waveforms with Active Demagnetization**

### 7.3.19 Motor Stop Options

The MCT8315A provides different options for stopping the motor which can be configured by MTR_STOP.

#### *7.3.19.1 Coast (Hi-Z) Mode*

Coast (Hi-Z) mode is configured by setting MTR_STOP to 000b. When motor stop command is received, the MCT8315A will transition into a high impedance (Hi-Z) state by turning off all MOSFETs. When the MCT8315A transitions from driving the motor into a Hi-Z state, the inductive current in the motor windings continues to flow and the energy returns to the power supply through the body diodes in the MOSFET output stage (see example Figure 7-42).

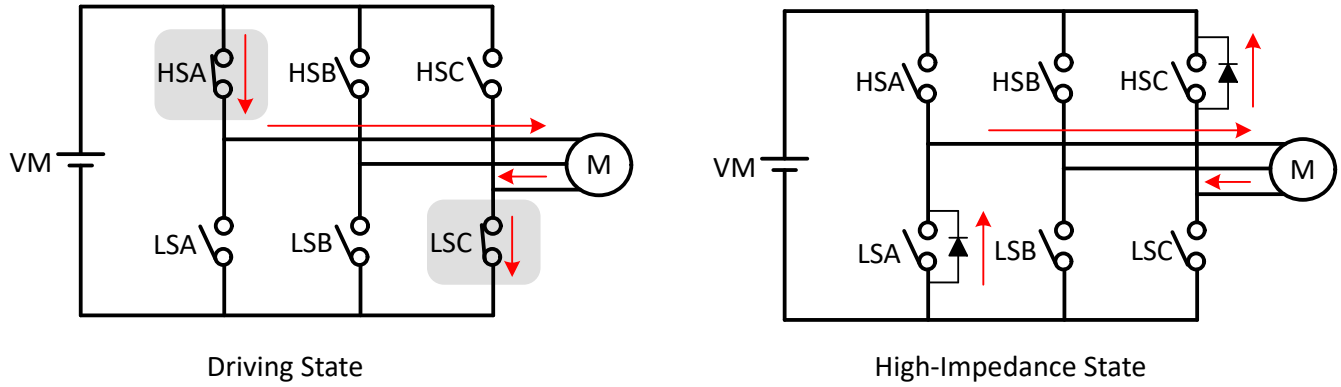


**Figure 7-42. Coast (Hi-Z) Mode**

In this example, current is applied to the motor through the high-side phase-A MOSFET (HSA) and returned through the low-side phase-C MOSFET (LSC). When motor stop command is received all 6 MOSFETs transition to Hi-Z state and the inductive energy returns to supply through body diodes of MOSFETs LSA and HSC.

#### *7.3.19.2 Recirculation Mode*

Recirculation mode is configured by setting MTR_STOP to 001b. In order to prevent the inductive energy from returning to DC input supply during motor stop, the MCT8315A allows current to circulate within the MOSFETs by selectively turning OFF some of the active (ON) MOSFETs for a certain time (auto calculated recirculation time to allow the inductive current to decay to zero) before transitioning into Hi-Z by turning OFF the remaining MOSFETs.

If high-side modulation was active, prior to motor stop command, then the high-side MOSFET is turned OFF on receiving motor stop command and the current recirculation takes place through low-side MOSFET (see example Figure 7-43). Once the recirculation time lapses, the low-side MOSFET also turns OFF and all MOSFETs are in Hi-Z state.

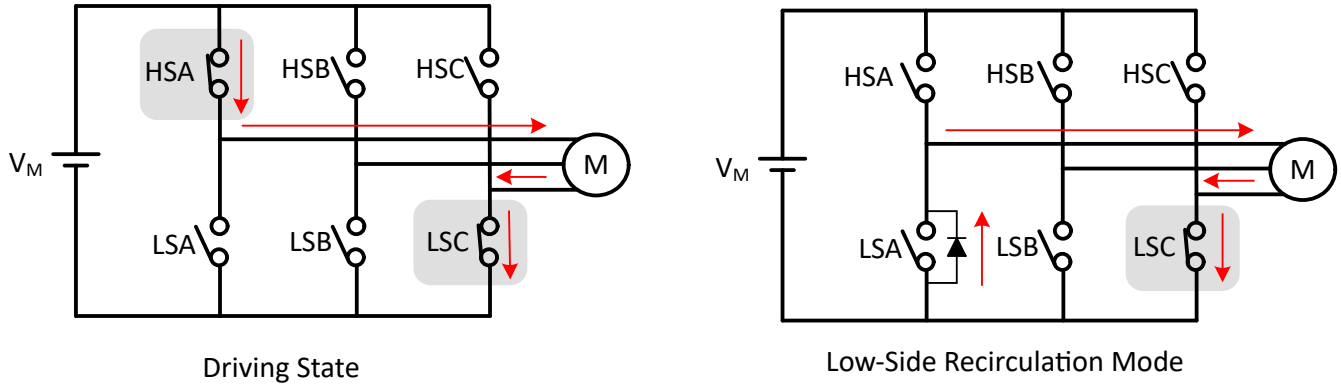


**Figure 7-43. Low-Side Recirculation**

If low-side modulation was active, prior to motor stop command, then the low-side MOSFET is turned OFF on receiving motor stop command and the current recirculation takes place through high-side MOSFET (see example Figure 7-44). Once the recirculation time lapses, the high-side MOSFET also turns OFF and all MOSFETs are in Hi-Z state


Copyright © 2023 Texas Instruments Incorporated

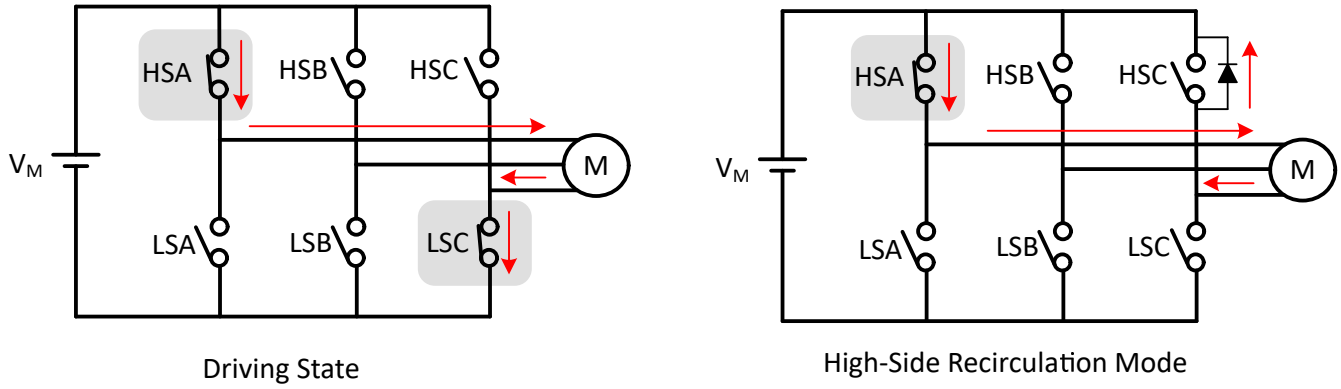


**Figure 7-44. High-Side Recirculation**

### *7.3.19.3 Low-Side Braking*

Low-side braking mode is configured by setting MTR_STOP to 010b. When a motor stop command is received, the output speed is reduced to a value defined by ACT_SPIN_BRK_THR prior to turning all low-side MOSFETs ON (see example Figure 7-45) for a time configured by MTR_STOP_BRK_TIME. If the motor speed is below ACT_SPIN_BRK_THR prior to receiving stop command, then the MCT8315A transitions directly into the brake state. After applying the brake for MTR_STOP_BRK_TIME, the MCT8315A transitions into the Hi-Z state by turning OFF all MOSFETs.

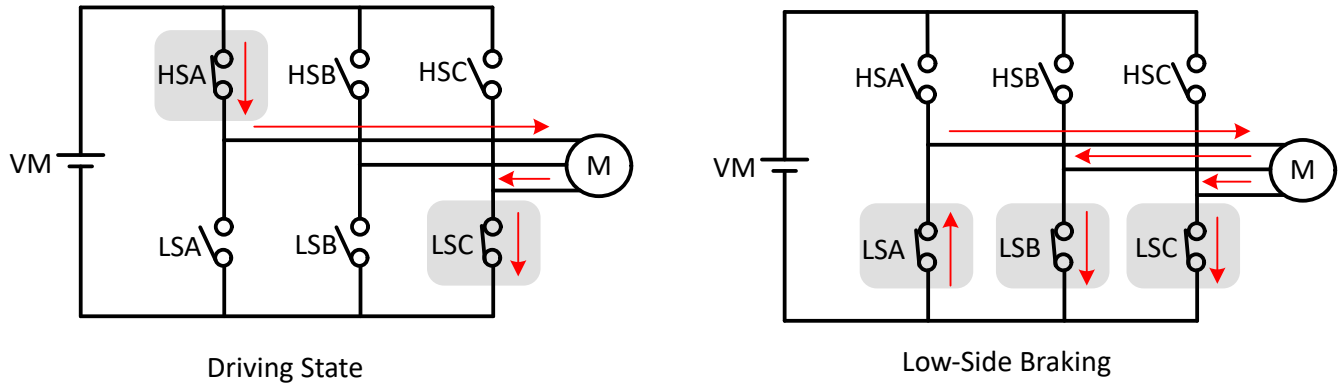


**Figure 7-45. Low-Side Braking**

The MCT8315A can also enter low-side braking through BRAKE pin input. When BRAKE pin is pulled to HIGH state, the output speed is reduced to a value defined by BRAKE_DUTY_THRESHOLD prior to turning all low-side MOSFETs ON. In this case, MCT8315A stays in low-side brake state till BRAKE pin changes to LOW state.

### *7.3.19.4 High-Side Braking*

High-side braking mode is configured by setting MTR_STOP to 011b. When a motor stop command is received, the output speed is reduced to a value defined by ACT_SPIN_BRK_THR prior to turning all high-side MOSFETs ON (see example Figure 7-46) for a time configured by MTR_STOP_BRK_TIME. If the motor speed is below ACT_SPIN_BRK_THR prior to receiving stop command, then the MCT8315A transitions directly into the brake state. After applying the brake for MTR_STOP_BRK_TIME, the MCT8315A transitions into Hi-Z state by turning OFF all MOSFETs.

Copyright © 2023 Texas Instruments Incorporated

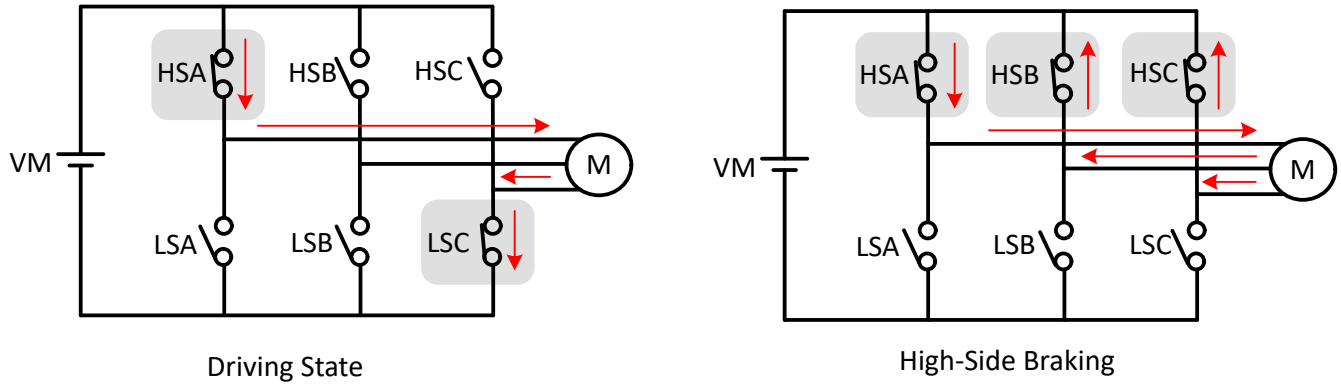


**Figure 7-46. High-Side Braking**

#### *7.3.19.5 Active Spin-Down*

Active spin down mode is configured by setting MTR_STOP to 100b. When motor stop command is received, MCT8315A reduces duty cycle to ACT_SPIN_BRK_THR and then transitions to Hi-Z state by turning all MOSFETs OFF. The advantage of this mode is that by reducing duty cycle, the motor is decelerated to a lower speed thereby reducing the phase currents before entering Hi-Z. Now, when motor transitions into Hi-Z state, the energy transfer to power supply is reduced. The threshold ACT_SPIN_BRK_THR needs to configured high enough for MCT8315A to not lose synchronization with the motor.

### 7.3.20 FG Configuration

The MCT8315A provides information about the motor speed through the Frequency Generate (FG) pin and provides an FG output until the motor back-EMF falls below FG_BEMF_THR.

#### *7.3.20.1 FG Output Frequency*

The FG output frequency can be configured by FG_DIV_FACTOR. In MCT8315, FG toggles once every commutation cycle if FG_DIV_FACTOR is set to 0000b. Many applications require the FG output to provide a pulse for every mechanical rotation of the motor. Different FG_DIV_FACTOR configurations can accomplish this for 2-pole up to 30-pole motors.

Figure 7-47 shows the FG output when MCT8315A has been configured to provide FG pulses once every commutation cycle (electrical cycle/3), once every electrical cycle (2 poles), once every two electrical cycle (4 poles), once every three electrical cycles (6 poles), once every four electrical cycles (8 poles), and so on.


Copyright © 2023 Texas Instruments Incorporated

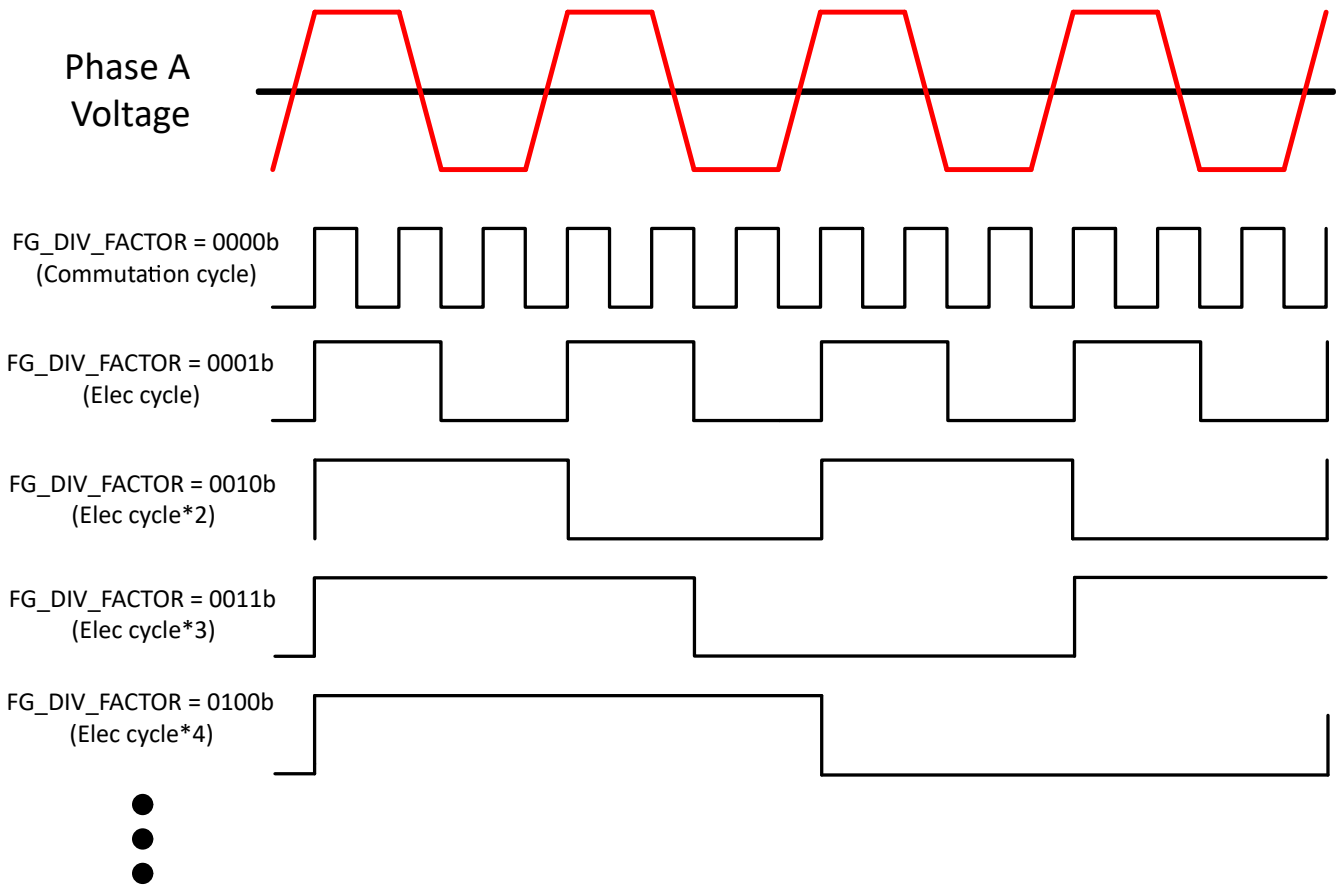


**Figure 7-47. FG Frequency Divider**

#### *7.3.20.2 FG Open-Loop and Lock Behavior*

During closed loop operation, the driving speed (FG output frequency) and the actual motor speed are synchronized. During open-loop operation, however, FG may not reflect the actual motor speed. During motor-lock condition, the FG output is driven high.

The MCT8315A provides three options for controlling the FG output during open loop, as shown in Figure 7-48. The selection of these options is configured through FG_SEL.

If FG_SEL is set to,

- 00b: When in open loop, the FG output is based on the driving frequency.
- 01b: When in open loop, the FG output will be driven high.
- 10b: The FG output will reflect the driving frequency during open loop operation in the first motor start-up cycle after power-on, sleep/standby; FG will be held high during open loop operation in subsequent start-up cycles.

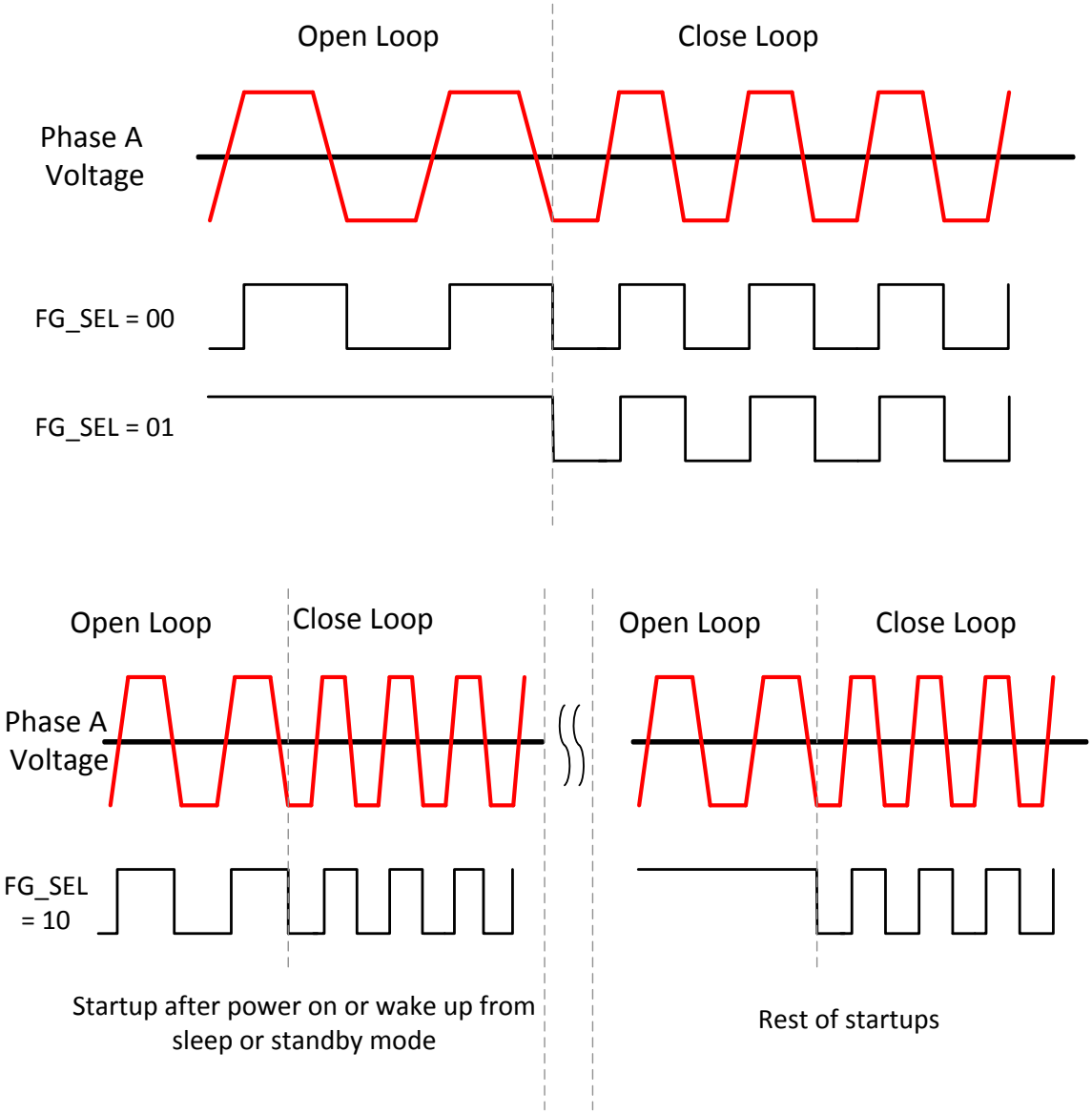


**Figure 7-48. FG Behavior During Open Loop**

### 7.3.21 Protections

The MCT8315A is protected from a host of fault events including motor lock, VM undervoltage, AVDD undervoltage, buck undervoltage, charge pump undervoltage, overtemperature and overcurrent events. Table 7-2 summarizes the response, recovery modes, power stage status, reporting mechanism for different faults.


Copyright © 2023 Texas Instruments Incorporated

**Note**

1. Actionable faults (latched or retry) are always reported on nFAULT pin (as logic low).
2. Actionable faults (latched or retry) are reported on ALARM pin (as logic high) when ALARM_PIN_EN is set to 1b.
3. Report only faults are reported on nFAULT (as logic low) only when ALARM_PIN_EN is set to 0b. When ALARM_PIN_EN is set to 1b, report only faults are reported only on ALARM pin (as logic high) while nFAULT stays high (external pull-up).
4. Priority order for multi-fault scenarios is latched > slower retry time fault > faster retry time fault > report only fault. For example, if a latched and retry fault happen simultaneously, the device stays latched in fault mode until user issues clear fault command by writing 1b to CLR_FLT. If two retry faults with different retry times happen simultaneously, the device retries only after the longer (slower) retry time lapses.
5. Recovery refers only to state of FETs (Hi-Z or active) after the fault condition is removed. Automatic indicates that the device automatically recovers (and FETs are active) when retry time lapses after the fault condition is removed. Latched indicates that the device waits for clearing of fault condition (by writing 1b to CLR_FLT bit) to make the FETs active again.
6. Actionable (latched or retry) faults can take up to 200-ms after fault response (FETs in Hi-Z) to be reported on nFAULT pin (as logic low), ALARM pin (as logic high) and fault status registers.
7. Latched faults can take up to 200-ms after CLR_FLT command is issued (over $I^2C$) to be cleared.

**Table 7-2. Fault Action and Response**

| FAULT | CONDITION | CONFIGURATION | REPORT | FETs | DIGITAL | RECOVERY |
|---|---|---|---|---|---|---|
| VM undervoltage | $V_{VM} < V_{UVLO}$ | — | — | Hi-Z | Disabled | Automatic: $V_{VM} > V_{UVLO}$ |
| AVDD undervoltage | $V_{AVDD} < V_{AVDD_UV}$ | — | — | Hi-Z | Disabled | Automatic: $V_{AVDD} > V_{AVDD_UV}$ |
| Buck undervoltage (BUCK_UV) | $V_{FB_BK} < V_{BK_UV}$ | — | — | Active/Hi-Z | Active/Disabled | Automatic: $V_{FB_BK} > V_{BK_UV}$ |
| Charge pump undervoltage (VCP_UV) | $V_{CP} < V_{CPUV}$ | — | nFAULT and GATE_DRIVER_FAULT_STATUS register | Hi-Z | Active | Automatic: $V_{VCP} > V_{CPUV}$ |
| Over Voltage Protection (OVP) | $V_{VM} > V_{OVP}$ | OVP_EN = 0b | None | Active | Active | No action |
| | | OVP_EN = 1b | nFAULT and GATE_DRIVER_FAULT_STATUS register | Hi-Z | Active | Automatic: $V_{VM} < V_{OVP}$ |
| Over Current Protection (OCP) | $I_{PHASE} > I_{OCP}$ | OCP_MODE = 00b | nFAULT and GATE_DRIVER_FAULT_STATUS register | Hi-Z | Active | Latched: CLR_FLT |
| | | OCP_MODE = 01b | nFAULT and GATE_DRIVER_FAULT_STATUS register | Hi-Z | Active | Retry: $t_{RETRY}$ |
| | | OCP_MODE = 10b | nFAULT and GATE_DRIVER_FAULT_STATUS register | Active | Active | No action |
| | | OCP_MODE = 11b | None | Active | Active | No action |
| Buck Overcurrent Protection (BUCK_OCP) | $I_{BK} > I_{BK_OCP}$ | — | — | Hi-Z | Disabled | Automatic |

**Table 7-2. Fault Action and Response (continued)**

| FAULT | CONDITION | CONFIGURATION | REPORT | FETs | DIGITAL | RECOVERY |
|---|---|---|---|---|---|---|
| Motor Lock (MTR_LCK ) | Motor lock: Abnormal Speed; No Motor Lock; Loss of Sync | MTR_LCK_MODE = 0000b or 0001b | nFAULT and CONTROLLER_FAULT_STATUS register | Hi-Z | Active | Latched: CLR_FLT |
| | | MTR_LCK_MODE = 0010b | nFAULT and CONTROLLER_FAULT_STATUS register | High side brake | Active | Latched: CLR_FLT |
| | | MTR_LCK_MODE = 0011b | nFAULT and CONTROLLER_FAULT_STATUS register | Low side brake | Active | Latched: CLR_FLT |
| | | MTR_LCK_MODE = 0100b or 0101b | nFAULT and CONTROLLER_FAULT_STATUS register | Hi-Z | Active | Retry: $t_{LCK_RETRY}$ |
| | | MTR_LCK_MODE = 0110b | nFAULT and CONTROLLER_FAULT_STATUS register | High side brake | Active | Retry: $t_{LCK_RETRY}$ |
| | | MTR_LCK_MODE = 0111b | nFAULT and CONTROLLER_FAULT_STATUS register | Low side brake | Active | Retry: $t_{LCK_RETRY}$ |
| | | MTR_LCK_MODE = 1000b | nFAULT and CONTROLLER_FAULT_STATUS register | Active | Active | No action |
| | | MTR_LCK_MODE = 1xx1b | None | Active | Active | No action |
| Cycle by Cycle Current Limit (CBC_ILIMIT) | $V_{SOX}$ > CBC_ILIMIT | CBC_ILIMIT_MODE = 0000b | nFAULT and CONTROLLER_FAULT_STATUS register | Recirculation | Active | Automatic: Next PWM cycle |
| | | CBC_ILIMIT_MODE = 0001b | None | Recirculation | Active | Automatic: Next PWM cycle |
| | | CBC_ILIMIT_MODE = 0010b | nFAULT and CONTROLLER_FAULT_STATUS register | Recirculation | Active | Automatic: $V_{SOX}$ < CBC_ILIMIT |
| | | CBC_ILIMIT_MODE = 0011b | None | Recirculation | Active | Automatic: $V_{SOX}$ < CBC_ILIMIT |
| | | CBC_ILIMIT_MODE = 0100b | nFAULT and CONTROLLER_FAULT_STATUS register | Recirculation | Active | Automatic: PWM cycle > CBC_RETRY_PWM_CYC |
| | | CBC_ILIMIT_MODE = 0101b | None | Recirculation | Active | Automatic: PWM cycle > CBC_RETRY_PWM_CYC |
| | | CBC_ILIMIT_MODE= 0110b | nFAULT and CONTROLLER_FAULT_STATUS register | Active | Active | No action |
| | | CBC_ILIMIT_MODE = 0111b, 1xxxb | None | Active | Active | No action |


Copyright © 2023 Texas Instruments Incorporated

## Table 7-2. Fault Action and Response (continued)

| FAULT | CONDITION | CONFIGURATION | REPORT | FETs | DIGITAL | RECOVERY |
|---|---|---|---|---|---|---|
| Lock-Detection Current Limit (LOCK_ILIMIT) | $V_{SOX}$ > LOCK_ILIMIT | LOCK_ILIMIT_MODE = 0000b | nFAULT and CONTROLLER_FAULT_STATUS register | Hi-Z | Active | Latched: CLR_FLT |
| | | LOCK_ILIMIT_MODE = 0001b | nFAULT and CONTROLLER_FAULT_STATUS register | Recirculation | Active | Latched: CLR_FLT |
| | | LOCK_ILIMIT_MODE = 0010b | nFAULT and CONTROLLER_FAULT_STATUS register | High-side brake | Active | Latched: CLR_FLT |
| | | LOCK_ILIMIT_MODE = 0011b | nFAULT and CONTROLLER_FAULT_STATUS register | Low-side brake | Active | Latched: CLR_FLT |
| | | LOCK_ILIMIT_MODE = 0100b | nFAULT and CONTROLLER_FAULT_STATUS register | Hi-Z | Active | Retry: $t_{LCK_RETRY}$ |
| | | LOCK_ILIMIT_MODE = 0101b | nFAULT and CONTROLLER_FAULT_STATUS register | Recirculation | Active | Retry: $t_{LCK_RETRY}$ |
| | | LOCK_ILIMIT_MODE = 0110b | nFAULT and CONTROLLER_FAULT_STATUS register | High-side brake | Active | Retry: $t_{LCK_RETRY}$ |
| | | LOCK_ILIMIT_MODE = 0111b | nFAULT and CONTROLLER_FAULT_STATUS register | Low-side brake | Active | Retry: $t_{LCK_RETRY}$ |
| | | LOCK_ILIMIT_MODE= 1000b | nFAULT and CONTROLLER_FAULT_STATUS register | Active | Active | No action |
| | | LOCK_ILIMIT_MODE = 1xx1b | None | Active | Active | No action |
| IPD Timeout Fault (IPD_T1_FAULT and IPD_T2_FAULT) | IPD TIME > 500ms (approx.), during IPD current ramp up or ramp down | IPD_TIMEOUT_FAULT_EN = 0b | — | Active | Active | No action |
| | | IPD_TIMEOUT_FAULT_EN = 1b | nFAULT and CONTROLLER_FAULT_STATUS register | Hi-Z | Active | Retry: $t_{LCK_RETRY}$ |
| IPD Timeout Fault (IPD_T1_FAULT and IPD_T2_FAULT) | IPD TIME > 500ms (approx.), during IPD current ramp up or ramp down | — | nFAULT and CONTROLLER_FAULT_STATUS register | Hi-Z | Active | Latched: CLR_FLT |
| IPD Frequency Fault (IPD_FREQ_FAULT) | IPD pulse before the current decay in previous IPD pulse | IPD_FREQ_FAULT_EN = 0b | — | Active | Active | No action |
| | | IPD_FREQ_FAULT_EN = 1b | nFAULT and CONTROLLER_FAULT_STATUS register | Hi-Z | Active | Retry: $t_{LCK_RETRY}$ |
| IPD Frequency Fault (IPD_FREQ_FAULT) | IPD pulse before the current decay in previous IPD pulse | — | nFAULT and CONTROLLER_FAULT_STATUS register | Hi-Z | Active | Latched: CLR_FLT |
| Maximum VM (overvoltage) fault | $V_{VM}$ > MAX_VM_MOTOR, if MAX_VM_MOTOR ≠ 000b | MAX_VM_MODE = 0b | nFAULT and CONTROLLER_FAULT_STATUS register | Hi-Z | Active | Latched: CLR_FLT |
| | | MAX_VM_MODE = 1b | nFAULT and CONTROLLER_FAULT_STATUS register | Hi-Z | Active | Automatic: ($V_{VM}$ < MAX_VM_MOTOR - 1)-V |
| Minimum VM (undervoltage) fault | $V_{VM}$ < MIN_VM_MOTOR, if MIN_VM_MOTOR ≠ 000b | MIN_VM_MODE = 0b | nFAULT and CONTROLLER_FAULT_STATUS register | Hi-Z | Active | Latched: CLR_FLT |
| | | MIN_VM_MODE = 1b | nFAULT and CONTROLLER_FAULT_STATUS register | Hi-Z | Active | Automatic: ($V_{VM}$ > MIN_VM_MOTOR + 0.5)-V |

Copyright © 2023 Texas Instruments Incorporated

**Table 7-2. Fault Action and Response (continued)**

| FAULT | CONDITION | CONFIGURATION | REPORT | FETs | DIGITAL | RECOVERY |
|---|---|---|---|---|---|---|
| External Watchdog | Watchdog tickle does not arrive before configured time interval when EXT_WDT_EN =1b. Refer Section 7.5.5 | EXT_WDT_FAULT_MODE = 0b | nFAULT and CONTROLLER_FAULT_STATUS register | Active | Active | No action |
| | | EXT_WDT_FAULT_MODE = 1b | nFAULT and CONTROLLER_FAULT_STATUS register | Hi-Z | Active | Latched: CLR_FLT |
| Bus Current Limit | $I_{VM}$ > BUS_CURRENT_LIMIT. Refer | BUS_CURRENT_LIMIT_ENABLE = 1b | nFAULT and CONTROLLER_FAULT_STATUS register | Active; motor speed will be restricted to limit DC bus current | Active | Automatic: Speed restriction is removed when $I_{VM}$ < BUS_CURRENT_LIMIT |
| Current Loop Saturation | Indication of current loop saturation due to lower $V_{VM}$ | SATURATION_FLAGS_EN = 1b | nFAULT and CONTROLLER_FAULT_STATUS register | Active; motor speed may not reach speed reference | Active | Automatic: motor will reach reference operating point upon exiting saturation |
| Speed Loop Saturation | Indication of speed loop saturation due to lower $V_{VM}$, lower ILIMIT setting etc., | SATURATION_FLAGS_EN = 1b | nFAULT and CONTROLLER_FAULT_STATUS register | Active; motor speed may not reach speed reference | Active | Automatic: motor will reach reference operating point upon exiting saturation |
| Thermal warning (OTW) | $T_J > T_{OTW}$ | OTW_REP = 0b | — | Active | Active | No action |
| | | OTW_REP = 1b | nFAULT and GATE_DRIVER_FAULT_STATUS register | Active | Active | Automatic: $T_J < T_{OTW} – T_{OTW_HYS}$ |
| Thermal shutdown (TSD) | $T_J > T_{TSD}$ | — | nFAULT and GATE_DRIVER_FAULT_STATUS register | Hi-Z | Active | Automatic: $T_J < T_{TSD} – T_{TSD_HYS}$ |


Copyright © 2023 Texas Instruments Incorporated

#### 7.3.21.1 VM Supply Undervoltage Lockout

If at any time the input supply voltage on the VM pin falls lower than the $V_{UVLO}$ threshold (VM UVLO falling threshold), all the integrated FETs, driver charge-pump and digital logic are disabled as shown in Figure 7-49. MCT8315A goes into reset state whenever VM UVLO event occurs.

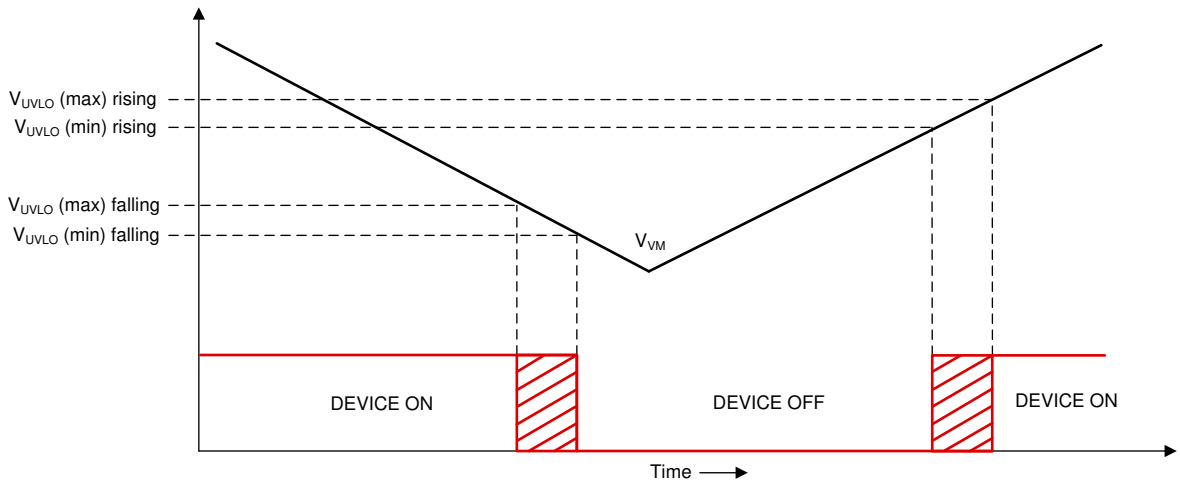


**Figure 7-49. VM Supply Undervoltage Lockout**

#### 7.3.21.2 AVDD Undervoltage Lockout (AVDD_UV)

If at any time the voltage on the AVDD pin falls lower than the $V_{AVDD_UV}$ threshold, all the integrated FETs, driver charge-pump and digital logic controller are disabled. Since internal circuitry in MCT8315A is powered through the AVDD regulator, MCT8315A goes into reset state whenever AVDD UV event occurs.

#### 7.3.21.3 BUCK Undervoltage Lockout (BUCK_UV)

If at any time the input supply voltage on the FB_BK pin falls lower than the $V_{BK_UVLO}$ threshold, both the high-side and low-side MOSFETs of the buck regulator are disabled . Since internal circuitry in MCT8315A is powered through the buck regulator, MCT8315A goes into reset state whenever buck UV event occurs.

#### 7.3.21.4 VCP Charge Pump Undervoltage Lockout (CPUV)

If at any time the voltage on the VCP pin (charge pump) falls lower than the $V_{CPUV}$ threshold, all the integrated FETs are disabled and the nFAULT pin is driven low. The DRIVER_FAULT and VCP_UV bits are set to 1b in the status registers. Normal operation resumes (driver operation and the nFAULT pin is released) when the VCP undervoltage condition clears. The VCP_UV bit stays set until cleared through the CLR_FLT bit.

#### 7.3.21.5 Overvoltage Protection (OVP)

If at any time input supply voltage on the VM pins rises higher than $V_{OVP}$, all the integrated FETs are disabled and the nFAULT pin is driven low. The DRIVER_FAULT and OVP bits are set to 1b in the status registers. Normal operation resumes (driver operation and the nFAULT pin is released) when the OVP condition clears. The OVP bit stays set until cleared through the CLR_FLT bit. Setting the OVP_EN to 0b disables this protection feature.

The OVP threshold can be set to 22-V or 34-V based on the OVP_SEL bit.

Copyright © 2023 Texas Instruments Incorporated

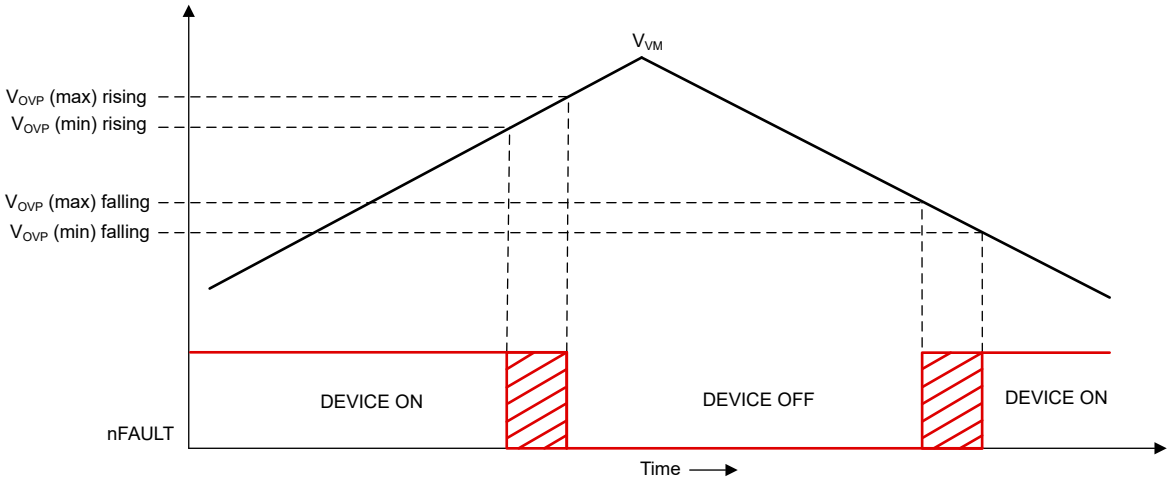


**Figure 7-50. Over Voltage Protection**

### *7.3.21.6 Overcurrent Protection (OCP)*

MOSFET overcurrent event is sensed by monitoring the current flowing through the FETs. If the current across a FET exceeds the $I_{OCP}$ threshold for longer than the deglitch time $t_{OCP}$, an OCP event is recognized and action is taken according to OCP_MODE. The $I_{OCP}$ threshold is set through the OCP_LVL, $t_{OCP}$ is set through OCP_DEG and the OCP_MODE can be configured in four different modes: latched shutdown, automatic retry, report only and disabled.

#### 7.3.21.6.1 OCP Latched Shutdown (OCP_MODE = 00b)

When an OCP event happens in this mode, all MOSFETs are disabled and the nFAULT pin is driven low. The DRIVER_FAULT, OCP and corresponding FET's OCP bits are set to 1b in the status registers. Normal operation resumes (driver operation and the nFAULT pin is released) when the OCP condition clears and a clear fault command is issued through the CLR_FLT bit.

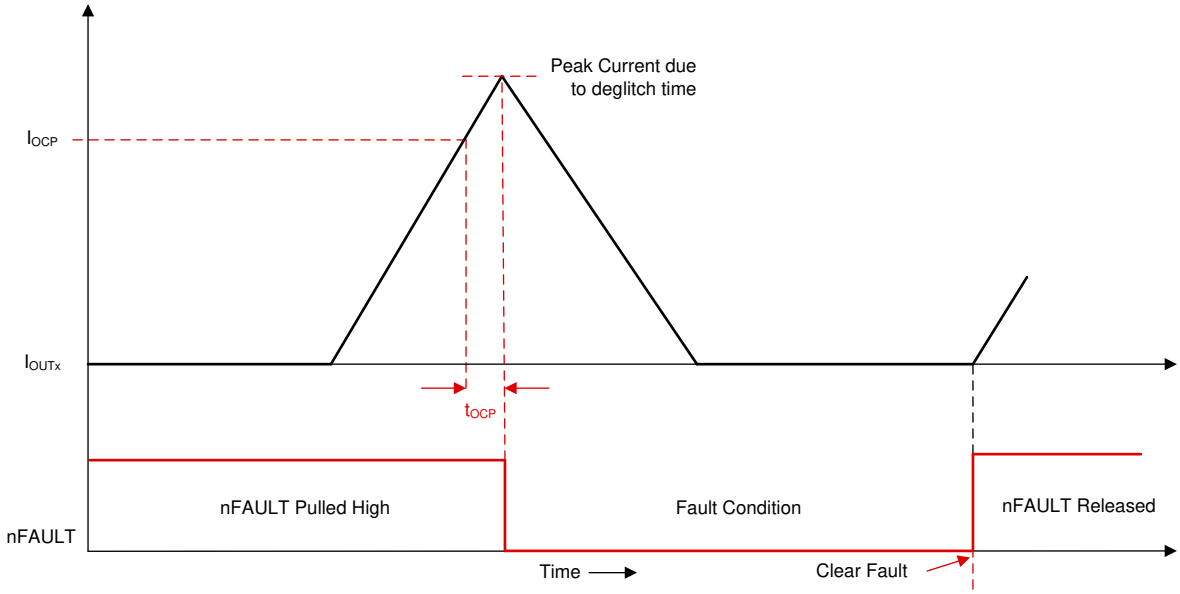


**Figure 7-51. Overcurrent Protection - Latched Shutdown Mode**

#### 7.3.21.6.2 OCP Automatic Retry (OCP_MODE = 01b)

When an OCP event happens in this mode, all the FETs are disabled and the nFAULT pin is driven low. The DRIVER_FAULT, OCP and corresponding FET's OCP bits are set to 1b in the fault status registers.


Copyright © 2023 Texas Instruments Incorporated

Normal operation resumes automatically (gate driver operation and the nFAULT pin is released) after the $t_{RETRY}$ (OCP_RETRY) time elapses. The DRIVER_FAULT bit is reset to 0b after the $t_{RETRY}$ period expires. The OCP and corresponding FET's OCP bits are set to 1b until cleared through the CLR_FLT bit.

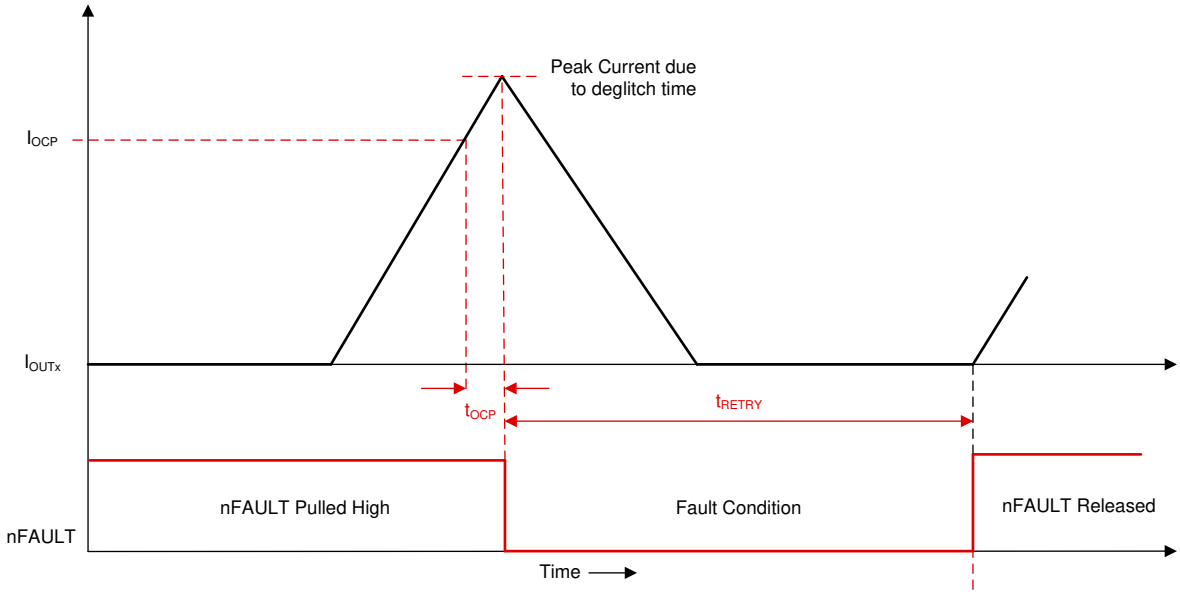


**Figure 7-52. Overcurrent Protection - Automatic Retry Mode**

#### 7.3.21.6.3 OCP Report Only (OCP_MODE = 10b)

No protective action is taken when an OCP event happens in this mode. The overcurrent event is reported by setting the DRIVER_FAULT, OCP, and corresponding FET's OCP bits to 1b in the fault status registers. The device continues to operate as usual. The external controller manages the overcurrent condition by acting appropriately. The reporting clears when the OCP condition clears and a clear fault command is issued through the CLR_FLT bit.

#### 7.3.21.6.4 OCP Disabled (OCP_MODE = 11b)

No action is taken when an OCP event happens in this mode.

### *7.3.21.7 Buck Overcurrent Protection*

The buck overcurrent event is sensed by monitoring the current flowing through high-side MOSFET of the buck regulator. If the current through the high-side MOSFET exceeds the $I_{BK_OCP}$ threshold for a time longer than the deglitch time ($t_{OCP}$), a buck OCP event is recognized and the buck regulator MOSFETs are disabled (Hi-Z). MCT8315A goes into reset state whenever buck OCP event occurs, since the internal circuitry in MCT8315A is powered from the buck regulator output.

### *7.3.21.8 Cycle-by-Cycle (CBC) Current Limit (CBC_ILIMIT)*

Cycle-by-cycle (CBC) current limit provides a means of controlling the amount of current delivered to the motor. This is useful when the system must limit the amount of current pulled from the power supply during motor operation. The CBC current limit limits the current applied to the motor from exceeding the configured threshold. CBC current limit functionality is achieved by connecting the output of current sense amplifier $V_{SOX}$ to a hardware comparator. If the voltage at output of current sense amplifier exceeds the CBC_ILIMIT threshold, a CBC_ILIMIT event is recognized and action is taken according to CBC_ILIMIT_MODE. Total delay in reaction to this event is dependent on the current sense amplifier gain and the comparator delay. CBC current limit in closed loop is set through CBC_ILIMIT while configuration of OL_ILIMIT_CONFIG sets the CBC current limit in open loop operation. Different modes can be configured through CBC_ILIMIT_MODE: CBC_ILIMIT automatic recovery next PWM cycle, CBC_ILIMIT automatic recovery threshold based, CBC_ILIMIT automatic recovery number of PWM cycles based, CBC_ILIMIT report only, CBC_ILIMIT disabled.

Copyright © 2023 Texas Instruments Incorporated

#### 7.3.21.8.1 CBC_ILIMIT Automatic Recovery next PWM Cycle (CBC_ILIMIT_MODE = 000xb)

When a CBC_ILIMIT event happens in this mode, MCT8315A stops driving the FETs using recirculation mode to prevent the inductive energy from entering the DC input supply. The CBC_ILIMIT bit is set to 1b in the fault status registers. Normal operation resumes at the start of next PWM cycle and CBC_ILIMIT bit is reset to 0b. The status of CONTROLLER_FAULT bit and nFAULT pin will be determined by CBC_ILIMIT_MODE. When CBC_ILIMIT_MODE is 0000b, CONTROLLER_FAULT bit is set to 1b and nFAULT pin driven low until next PWM cycle. When CBC_ILIMIT_MODE is 0001b, CONTROLLER_FAULT bit is not set to 1b and nFAULT is not driven low.

#### 7.3.21.8.2 CBC_ILIMIT Automatic Recovery Threshold Based (CBC_ILIMIT_MODE = 001xb)

When a CBC_ILIMIT event happens in this mode, MCT8315A stops driving the FETs using recirculation mode to prevent the inductive energy from entering the DC input supply. The CBC_ILIMIT bit is set to 1b in the status registers. Normal operation resumes after $V_{SOX}$ falls below CBC_ILIMIT threshold and CBC_ILIMIT bit is set to 0b. The status of CONTROLLER_FAULT bit and nFAULT pin will be determined by CBC_ILIMIT_MODE. When CBC_ILIMIT_MODE is 0010b, CONTROLLER_FAULT bit is set to 1b and nFAULT pin driven low until $V_{SOX}$ falls below CBC_ILIMIT threshold. When CBC_ILIMIT_MODE is 0011b, CONTROLLER_FAULT bit is not set to 1b and nFAULT is not driven low.

#### 7.3.21.8.3 CBC_ILIMIT Automatic Recovery after 'n' PWM Cycles (CBC_ILIMIT_MODE = 010xb)

When a CBC_ILIMIT event happens in this mode, MCT8315A stops driving the FETs using recirculation mode to prevent the inductive energy from entering the DC input supply. The CBC_ILIMIT bit is set to 1b in the fault status registers. Normal operation resumes after (CBC_RETRY_PWM_CYC +1) PWM cycles and CBC_ILIMIT bit is set to 0b. The status of CONTROLLER_FAULT bit and nFAULT pin will be determined by CBC_ILIMIT_MODE. When CBC_ILIMIT_MODE is 0100b, CONTROLLER_FAULT bit is set to1b and nFAULT pin driven low until (CBC_RETRY_PWM_CYC +1) PWM cycles lapse. When CBC_ILIMIT_MODE is 0101b, CONTROLLER_FAULT bit is not set to 1b and nFAULT is not driven low.

#### 7.3.21.8.4 CBC_ILIMIT Report Only (CBC_ILIMIT_MODE = 0110b)

No protective action is taken when a CBC_ILIMIT event happens in this mode. The CBC current limit event is reported by setting the CONTROLLER_FAULT and CBC_ILIMIT bits to 1b in the fault status registers. The gate drivers continue to operate. The external controller manages the overcurrent condition by acting appropriately. The reporting clears when the CBC_ILIMIT condition clears and a clear fault command is issued through the CLR_FLT bit.

#### 7.3.21.8.5 CBC_ILIMIT Disabled (CBC_ILIMIT_MODE = 0111b or 1xxxb)

No action is taken when a CBC_ILIMIT event happens in this mode.

### *7.3.21.9 Lock Detection Current Limit (LOCK_ILIMIT)*

The lock detection current limit function provides a configurable threshold for limiting the current to prevent damage to the system. The MCT8315A continuously monitors the output of the current sense amplifier (CSA) through the ADC. If at any time, the voltage on the output of CSA exceeds LOCK_ILIMIT for a time longer than $t_{LCK_ILIMIT}$, a LOCK_ILIMIT event is recognized and action is taken according to LOCK_ILIMIT_MODE. The threshold is set through LOCK_ILIMIT, the $t_{LCK_ILIMIT}$ is set through LOCK_ILIMIT_DEG. LOCK_ILIMIT_MODE can be set to four different modes: LOCK_ILIMIT latched shutdown, LOCK_ILIMIT automatic retry, LOCK_ILIMIT report only and LOCK_ILIMIT disabled.

#### 7.3.21.9.1 LOCK_ILIMIT Latched Shutdown (LOCK_ILIMIT_MODE = 00xxb)

When a LOCK_ILIMIT event happens in this mode, the status of MOSFETs will be configured by LOCK_ILIMIT_MODE and nFAULT is driven low. Status of MOSFETs during LOCK_ILIMIT:

- LOCK_ILIMIT_MODE = 0000b: All MOSFETs are turned OFF.
- LOCK_ILIMIT_MODE = 0001b: MOSFET which was switching is turned OFF while the one which was conducting stays ON till inductive energy is completely recirculated.
- LOCK_ILIMIT_MODE = 0010b: All high-side MOSFETs are turned ON.
- LOCK_ILIMIT_MODE = 0011b: All low-side MOSFETs are turned ON.


Copyright © 2023 Texas Instruments Incorporated

The CONTROLLER_FAULT and LOCK_ILIMIT bits are set to 1b in the fault status registers. Normal operation resumes (gate driver operation and the nFAULT pin is released) when the LOCK_ILIMIT condition clears and a clear fault command is issued through the CLR_FLT bit.

#### 7.3.21.9.2 LOCK_ILIMIT Automatic Recovery (LOCK_ILIMIT_MODE = 01xxb)

When a LOCK_ILIMIT event happens in this mode, the status of MOSFETs will be configured by LOCK_ILIMIT_MODE and nFAULT is driven low. Status of MOSFETs during LOCK_ILIMIT:

- LOCK_ILIMIT_MODE = 0100b: All MOSFETs are turned OFF.
- LOCK_ILIMIT_MODE = 0101b: MOSFET which was switching is turned OFF while the one which was conducting stays ON till inductive energy is completely recirculated.
- LOCK_ILIMIT_MODE = 0110b: All high-side MOSFETs are turned ON
- LOCK_ILIMIT_MODE = 0111b: All low-side MOSFETs are turned ON

The CONTROLLER_FAULT and LOCK_ILIMIT bits are set to 1b in the fault status registers. Normal operation resumes automatically (gate driver operation and the nFAULT pin is released) after the $t_{LCK_RETRY}$ (configured by LCK_RETRY) time lapses. The CONTROLLER_FAULT and LOCK_ILIMIT bits are reset to 0b after the $t_{LCK_RETRY}$ period expires.

#### 7.3.21.9.3 LOCK_ILIMIT Report Only (LOCK_ILIMIT_MODE = 1000b)

No protective action is taken when a LOCK_ILIMIT event happens in this mode. The lock detection current limit event is reported by setting the CONTROLLER_FAULT and LOCK_ILIMIT bits to 1b in the fault status registers. The gate drivers continue to operate. The external controller manages this condition by acting appropriately. The reporting clears when the LOCK_ILIMIT condition clears and a clear fault command is issued through the CLR_FLT bit.

#### 7.3.21.9.4 LOCK_ILIMIT Disabled (LOCK_ILIMIT_MODE = 1xx1b)

No action is taken when a LOCK_ILIMIT event happens in this mode.

### *7.3.21.10 Thermal Warning (OTW)*

If the die temperature exceeds the thermal warning limit ($T_{OTW}$), nFAULT is pulled low and the OT and OTW bits in the gate driver status register are set to 1b. The reporting of OTW (on nFAULT and status bits) can be enabled by setting OTW_REP to 1b. The device performs no additional action and continues to function. In this case, the nFAULT pin is released when the die temperature decreases below the hysteresis point of the thermal warning limit ($T_{OTW}$ - $T_{OTW_HYS}$). The OTW bit remains set until cleared through the CLR_FLT bit and the die temperature is lower than thermal warning limit. ($T_{OTW}$ - $T_{OTW_HYS}$).

### *7.3.21.11 Thermal Shutdown (TSD)*

If the die temperature exceeds the thermal shutdown limit ($T_{TSD}$), all the FETs are disabled, the charge pump is shut down, and the nFAULT pin is driven low. In addition, the DRIVER_FAULT, OT and TSD bit in the status register are set to 1b. Normal operation resumes (driver operation and the nFAULT pin is released) when the die temperature decreases below the hysteresis point of the thermal shutdown limit ($T_{TSD}$ - $T_{TSD_HYS}$). The TSD bit stays latched high indicating that a thermal event occurred until a clear fault command is issued through the CLR_FLT bit. This protection feature cannot be disabled.

### *7.3.21.12 Motor Lock (MTR_LCK)*

The MCT8315A continuously checks for different motor lock conditions (see Motor Lock Detection) during motor operation. When one of the enabled lock condition happens, a MTR_LCK event is recognized and action is taken according to the MTR_LCK_MODE.

In MCT8315A, all locks can be enabled or disabled individually and retry times can be configured through LCK_RETRY. MTR_LCK_MODE bit can operate in four different modes: MTR_LCK latched shutdown, MTR_LCK automatic retry, MTR_LCK report only and MTR_LCK disabled.

#### 7.3.21.12.1 MTR_LCK Latched Shutdown (MTR_LCK_MODE = 00xxb)

When a MTR_LCK event happens in this mode, the status of MOSFETs will be configured by MTR_LCK_MODE and nFAULT is driven low. Status of MOSFETs during MTR_LCK:

Copyright © 2023 Texas Instruments Incorporated

- MTR_LCK_MODE = 0000b: All MOSFETs are turned OFF.
- MTR_LCK_MODE = 0001b: MOSFET which was switching is turned OFF while the one which was conducting stays ON till inductive energy is completely recirculated.
- MTR_LCK_MODE = 0010b: All high-side MOSFETs are turned ON.
- MTR_LCK_MODE = 0011b: All low-side MOSFETs are turned ON.

The CONTROLLER_FAULT, MTR_LCK and respective motor lock condition bits are set to 1b in the fault status registers. Normal operation resumes (gate driver operation and the nFAULT pin is released) when the MTR_LCK condition clears and a clear fault command is issued through the CLR_FLT bit.

#### 7.3.21.12.2 MTR_LCK Automatic Recovery (MTR_LCK_MODE= 01xxb)

When a MTR_LCK event happens in this mode, the status of MOSFETs will be configured by MTR_LCK_MODE and nFAULT is driven low. Status of MOSFETs during MTR_LCK:

- MTR_LCK_MODE = 0100b: All MOSFETs are turned OFF.
- MTR_LCK_MODE = 0101b: MOSFET which was switching is turned OFF while the one which was conducting stays ON till inductive energy is completely recirculated.
- MTR_LCK_MODE = 0110b: All high-side MOSFETs are turned ON.
- MTR_LCK_MODE = 0111b: All low-side MOSFETs are turned ON.

The CONTROLLER_FAULT, MTR_LCK and respective motor lock condition bits are set to 1b in the fault status registers. Normal operation resumes automatically (gate driver operation and the nFAULT pin is released) after the $t_{LCK_RETRY}$ (configured by LCK_RETRY) time lapses. The CONTROLLER_FAULT, MTR_LCK and respective motor lock condition bits are reset to 0b after the $t_{LCK_RETRY}$ period expires.

#### 7.3.21.12.3 MTR_LCK Report Only (MTR_LCK_MODE = 1000b)

No protective action is taken when a MTR_LCK event happens in this mode. The motor lock event is reported by setting the CONTROLLER_FAULT, MTR_LCK and respective motor lock condition bits to 1b in the fault status registers. The gate drivers continue to operate. The external controller manages this condition by acting appropriately. The reporting clears when the MTR_LCK condition clears and a clear fault command is issued through the CLR_FLT bit.

#### 7.3.21.12.4 MTR_LCK Disabled (MTR_LCK_MODE = 1xx1b)

No action is taken when a MTR_LCK event happens in this mode.

### *7.3.21.13 Motor Lock Detection*

The MCT8315A provides different lock detect mechanisms to determine if the motor is in a locked state. Multiple detection mechanisms work together to ensure the lock condition is detected quickly and reliably. In addition to detecting if there is a locked motor condition, the MCT8315A can also identify and take action if there is no motor connected to the system. Each of the lock detect mechanisms and the no-motor detection can be disabled by their respective register bits (LOCK1/2/3_EN).

#### 7.3.21.13.1 Lock 1: Abnormal Speed (ABN_SPEED)

MCT8315A monitors the speed continuously and at any time the speed exceeds LOCK_ABN_SPEED, an ABN_SPEED lock event is recognized and action is taken according to the MTR_LCK_MODE. In MCT8315A, the threshold is set through the LOCK_ABN_SPEED register. ABN_SPEED lock can be enabled/disabled by LOCK1_EN.

#### 7.3.21.13.2 Lock 2: Loss of Sync (LOSS_OF_SYNC)

The motor is commutated by detecting the zero crossing on the phase which is in Hi-Z state. If the motor is locked, the back-EMF will disappear and MCT8315A will be not able to detect the zero crossing. If MCT8315A is not able to detect zero crossing for LOSS_SYNC_TIMES number of times, LOSS_OF_SYNC event is recognized and action is taken according to the MTR_LCK_MODE. LOSS_OF_SYNC lock can be enabled/disabled by LOCK2_EN.


Copyright © 2023 Texas Instruments Incorporated

#### 7.3.21.13.3 Lock3: No-Motor Fault (NO_MTR)

The MCT8315A continuously monitors the relevant phase current (low-side phase in the present phase pattern); if the relevant phase current stays below NO_MTR_THR for a time longer than NO_MTR_DEG_TIME, a NO_MTR event is recognized. The response to the NO_MTR event is configured through MTR_LCK_MODE . NO_MTR lock can be enabled/disabled by LOCK3_EN.

#### *7.3.21.14 SW VM Undervoltage Protection*

MCT8315A provides the option of a software based VM undervoltage protection. The VM level at which the software triggers the undervoltage fault is set by MIN_VM_MOTOR and the fault response to VM undervoltage is set by MIN_VM_MODE. If MIN_VM_MODE is set to 0b, VM undervoltage fault (at MIN_VM_MOTOR) is latched and the FETs are in Hi-Z until the fault condition is cleared by writing 1b to CLR_FIT bit. If MIN_VM_MODE is set to 1b, VM undervoltage fault (at MIN_VM_MOTOR) automatically clears and the device starts motor operation once VM > MIN_VM_MODE.

#### *7.3.21.15 SW VM Overvoltage Protection*

MCT8315A provides the option of a software based VM overvoltage protection. The VM level at which the software triggers the overvoltage fault is set by MAX_VM_MOTOR and the fault response to VM overvoltage is set by MAX_VM_MODE. If MAX_VM_MODE is set to 0b, VM overvoltage fault (at MAX_VM_MOTOR) is latched and the FETs are in Hi-Z until the fault condition is cleared by writing 1b to CLR_FIT bit. If MAX_VM_MODE is set to 1b, VM overvoltage fault (at MAX_VM_MOTOR) automatically clears and the device starts motor operation once VM < MAX_VM_MODE.

#### *7.3.21.16 IPD Faults*

The MCT8315A uses 12-bit timers to estimate the time during the current ramp up and ramp down during IPD, when the motor start-up is configured as IPD (MTR_STARTUP is set to 10b). During IPD, the algorithm checks for a successful current ramp-up to IPD_CURR_THR, starting with an IPD clock of 10MHz; if unsuccessful (timer overflow before current reaches IPD_CURR_THR), IPD is repeated with lower frequency clocks of 1MHz, 100kHz, and 10kHz sequentially. If the IPD timer overflows (current does not reach IPD_CURR_THR) with all the four clock frequencies, then the IPD_T1_FAULT gets triggered. Similarly the algorithm checks for a successful current decay to zero during IPD current ramp down using all the mentioned IPD clock frequencies. If the IPD timer overflows (current does not ramp down to zero) in all the four attempts, then the IPD_T2_FAULT gets triggered.

IPD gives incorrect results if the next IPD pulse is commanded before the complete decay of current due to present IPD pulse. The MCT8315A can generate a fault called IPD_FREQ_FAULT during such a scenario . The IPD_FREQ_FAULT maybe triggered if the IPD frequency is too high for the IPD current limit and the IPD release mode or if the motor inductance is too high for the IPD frequency, IPD current limit and IPD release mode.

Copyright © 2023 Texas Instruments Incorporated

## 7.4 Device Functional Modes

### 7.4.1 Functional Modes

#### *7.4.1.1 Sleep Mode*

In sleep mode, the MOSFETs, sense amplifiers, buck regulator, charge pump, AVDD LDO regulator and the $I^2C$ bus are disabled. The device can be configured to enter sleep (instead of standby) mode by configuring DEV_MODE to 1b. SPEED pin and $I^2C$ speed command determine entry and exit from sleep state as described in Table 7-3.

#### *7.4.1.2 Standby Mode*

The device can be configured to operate as a standby device by setting DEV_MODE to 0b. In standby mode, the charge pump, AVDD LDO, buck regulator and $I^2C$ bus are active while the motor is in stopped state waiting for a suitable non-zero speed command. SPEED pin (analog, PWM or frequency based speed input) or $I^2C$ speed command ($I^2C$ based speed input) determines entry and exit from standby state as described in Table 7-3.

The thresholds for entering and exiting standby mode in different speed input modes are as follows,

1. Analog : $V_{EN_SB}$ = (ZERO_DUTY_THR x $V_{ANA_FS}$), $V_{EX_SB}$ = ((ZERO_DUTY_THR + ZERO_DUTY_HYST) x $V_{ANA_FS}$)
2. PWM : $Duty_{EN_SB}$ = ZERO_DUTY_THR, $Duty_{EX_SB}$ = (ZERO_DUTY_THR + ZERO_DUTY_HYST)
3. $I^2C$ : $SPEED_CTRL_{EN_SB}$ = ZERO_DUTY_THR x 32767, $SPEED_CTRL_{EX_SB}$ = (ZERO_DUTY_THR + ZERO_DUTY_HYST) x 32767
4. Frequency : $Freq_{EN_SB}$ = ZERO_DUTY_THR x INPUT_MAX_FREQUENCY, $Freq_{EX_SB}$ = (ZERO_DUTY_THR + ZERO_DUTY_HYST) x INPUT_MAX_FREQUENCY

**Table 7-3. Conditions to Enter or Exit Sleep or Standby Modes**

| SPEED COMMAND MODE | ENTER STANDBY CONDITION | EXIT FROM STANDBY CONDITION | ENTER SLEEP CONDITION | EXIT FROM SLEEP CONDITION |
|---|---|---|---|---|
| Analog | $V_{SPEED} < V_{EN_SB}$ | $V_{SPEED} > V_{EX_SB}$ | $V_{SPEED} < V_{EN_SL}$ for $t_{DET_SL_ANA}$ | $V_{SPEED} > V_{EX_SL}$ for $t_{DET_ANA}$ |
| PWM | $Duty_{SPEED} < Duty_{EN_SB}$ | $Duty_{SPEED} > Duty_{EX_SB}$ | $V_{SPEED} < V_{IL}$ for $t_{DET_SL_PWM}$ | $V_{SPEED} > V_{IH}$ for $t_{DET_PWM}$ |
| $I^2C$ | SPEED_CTRL < $SPEED_CTRL_{EN_SB}$ | SPEED_CTRL > $SPEED_CTRL_{EX_SB}$ | SPEED_CTRL is set to 0b for SLEEP_TIME and $V_{SPEED} < V_{IL}$ | $V_{SPEED} > V_{IH}$ for $t_{DET_PWM}$ |
| Frequency | $Freq_{SPEED} < Freq_{EN_SB}$ | $Freq_{SPEED} > Freq_{EX_SB}$ | $V_{SPEED} < V_{IL}$ for $t_{DET_SL_PWM}$ | $V_{SPEED} > V_{IH}$ for $t_{DET_PWM}$ |

**Note**

$V_{SPEED}$ : SPEED pin input voltage, $Duty_{SPEED}$ : SPEED pin input PWM duty, $Freq_{SPEED}$ : SPEED pin input frequency

#### *7.4.1.3 Fault Reset (CLR_FLT)*

In the case of latched faults, the device goes into a partial shutdown state to help protect the power MOSFETs and system. When the fault condition clears, the device can go to the operating state again by setting the CLR_FLT to 1b.

## 7.5 External Interface

### 7.5.1 DRVOFF Functionality

When DRVOFF pin is driven high, all six MOSFETs are put in Hi-Z state, irrespective of speed command. If motor speed command is non-zero when DRVOFF is driven high, device may encounter a fault like no motor or abnormal BEMF.

### 7.5.2 DAC outputs

MCT8315A has two 12-bit DACs which output analog voltage equivalent of digital variables on the DACOUT1 and DACOUT2 pins. The maximum DAC output voltage is 3-V. Signals available on DACOUT pins are


Copyright © 2023 Texas Instruments Incorporated

useful in tracking internal variables in real-time and can be used for tuning speed controller or motor acceleration time. The address for variables to be tracked on DACOUT1 and DACOUT2 are configured using DACOUT1_VAR_ADDR and DACOUT2_VAR_ADDR respectively. DACOUT1 is available on pin 38 and DACOUT2 can be configured on pin 36 by setting DAC_SOX_CONFIG to 00b. DACOUT2 is also available on pin 37. DAC_CONFIG should be configured to 1b for pins 37, 38 to function as DAC outputs.

### 7.5.3 Current Sense Output

MCT8315A can provide the built-in current sense amplifiers' output on the SOX pin. SOX output is available on pin 36 and can be configured by DAC_SOX_CONFIG.

### 7.5.4 Oscillator Source

MCT8315A has a built-in oscillator that is used as the clock source for all digital peripherals and timing measurements. Default configuration for MCT8315A is to use the internal oscillator and it is sufficient to drive the motor without need for any external crystal or clock sources.

In case MCT8315A does not meet accuracy requirements of timing measurement or speed loop, then MCT8315A has an option to support an external clock reference.

In order to improve EMI performance, MCT8315A provides the option of modulating the clock frequency by enabling Spread Spectrum Modulation (SSM) through SSM_CONFIG.

#### *7.5.4.1 External Clock Source*

Speed loop accuracy of MCT8315A over the operating temperature range can be improved by providing a more accurate clock reference on EXT_CLK pin as shown in Figure 7-53. EXT_CLK will be used to calibrate the internal clock oscillator - this will help match the accuracy of the internal clock oscillator to that of the external clock. External clock source can be selected by configuring CLK_SEL to 11b and setting EXT_CLK_EN to 1b. The external clock source frequency can be configured through EXT_CLK_CONFIG.

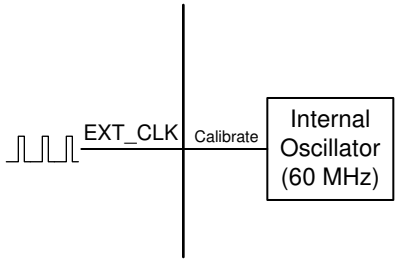


**Figure 7-53. External Clock Reference**

**Note**

External clock is optional and can be used when higher clock accuracy is needed. MCT8315A will always power up using the internal oscillator in all modes.

### 7.5.5 External Watchdog

MCT8315A provides an external watchdog feature - EXT_WD_EN bit should be set to 1b to enable the external watchdog. When this feature is enabled, the device waits for a tickle (low to high transition in EXT_WD pin, EXT_WD_STATUS_SET set to 1b in $I^2C$ mode) from the external watchdog input for a configured time interval; if the time interval between two consecutive tickles is higher than the configured time, a watchdog fault is triggered. This fault can be configured using EXT_WD_FAULT either as a report only fault or as a latched fault with outputs in Hi-Z state. The latched fault can be cleared by writing 1b to CLR_FLT. When a watchdog timeout occurs, EXT_WD_TIMEOUT bit is set to 1b. In case, the next tickle arrives before the configured time interval elapses, the watchdog timer is reset and it begins to wait for the next tickle. This can be used to continuously monitor the health of an external MCU (which is the external watchdog input) and put the MCT8315A outputs in Hi-Z in case the external MCU is in an erroneous state.

Copyright © 2023 Texas Instruments Incorporated

The external watchdog input is selected using EXT_WD_INPUT and can either be the EXT_WD pin or the $I^2C$ interface. The time interval between two tickles to trigger a watchdog fault is configured by EXT_WD_FREQ; there are 4 time (frequency) settings - 100ms (10Hz), 200ms (5Hz), 500ms (2Hz) and 1000ms (1Hz).

**Note**

Watchdog should be disabled by setting EXT_WD_EN to 0b before changing EXT_WD_FREQ configuration.


Copyright © 2023 Texas Instruments Incorporated

## 7.6 EEPROM access and I²C interface

### 7.6.1 EEPROM Access

MCT8315A has 1024 bits (16 rows of 64 bits each) of EEPROM, which are used to store the motor configuration parameters. Erase operations are row-wise (all 64 bits are erased in a single erase operation), but 32-bit write and read operations are supported. EEPROM can be written and read using the I²C serial interface but erase cannot be performed using I²C serial interface. The shadow registers corresponding to the EEPROM are located at addresses 0x000080-0x0000AE.

**Note**

MCT8315A allows EEPROM write and read operations only when the motor is not spinning.

#### *7.6.1.1 EEPROM Write*

In MCT8315A, EEPROM write procedure is as follows,

1. Write register 0x000080 (ISD_CONFIG) with ISD configuration like resync enable, reverse drive enable, stationary detect threshold etc.,
2. Write register 0x000082 (MOTOR_STARTUP1) with motor start-up configuration like start-up method, first cycle frequency, IPD parameters, align parameters etc.,
3. Write register 0x000084 (MOTOR_STARTUP2) with motor start-up configuration like open loop acceleration, minimum duty cycle etc.,
4. Write register 0x000086 (CLOSED_LOOP1) with motor control configuration like closed loop acceleration, PWM frequency, PWM modulation etc.,
5. Write register 0x000088 (CLOSED_LOOP2) with motor control configuration like FG signal parameters, motor stop options etc.,
6. Write register 0x00008A (CLOSED_LOOP3) with motor control configuration like fast start-up and dynamic degauss parameters including BEMF thresholds, duty cycle thresholds etc.,
7. Write register 0x00008C (CLOSED_LOOP4) with motor control configuration like fast deceleration parameters including fast deceleration duty threshold, window, current limits etc.,
8. Write register 0x00008E (CONST_SPEED) with motor control configuration like speed loop parameters including closed loop mode, saturation limits, $K_p$, $K_i$ etc.,
9. Write register 0x000090 (CONST_PWR) with motor control configuration like input power regulation parameters including maximum power, constant power mode, power level hysteresis, maximum speed etc.,
10. Write register 0x000092 (FAULT_CONFIG1) with fault control configuration like CBC, lock current limits and actions, retry times etc.,
11. Write register 0x000094 (FAULT_CONFIG2) with fault control configuration like OV, UV limits and actions, abnormal speed level, motor lock setting etc.,
12. Write registers 0x000096 and 0x000098 (150_DEG_TWO_PH_PROFILE, 150_DEG_THREE_PH_PROFILE) with PWM duty cycle configurations for 150° modulation.
13. Write registers 0x00009A and 0x00009C (TRAP_CONFIG1 and TRAP_CONFIG2) with algorithm parameters like ISD BEMF threshold, blanking time, AVS current limits etc.,
14. Write registers 0x0000A4 and 0x0000A6 (PIN_CONFIG1 and PIN_CONFIG2) with pin configuration for DIR, BRAKE, DACOUT1 and DACOUT2, SOX, external watchdog etc.,
15. Write register 0x0000A8 (DEVICE_CONFIG) with device configuration like device mode, external clock enable, clock source, speed input PWM frequency range etc.,
16. Write registers 0x0000AC and 0x0000AE (GD_CONFIG1 and GD_CONFIG2) with gate driver configuration like slew rate, CSA gain, OCP level, mode, OVP enable etc.,
17. Write 0x8A500000 into register 0x0000E6 to write the shadow register (0x000080-0x0000AE) values into the EEPROM.
18. Wait for 300ms for the EEPROM write operation to complete.

Steps 1-16 can be selectively executed based on registers/parameters that need to be modified. After all shadow registers have been updated with the required values, step 17 should be executed to copy the contents of the shadow registers into the EEPROM.

Copyright © 2023 Texas Instruments Incorporated

#### 7.6.1.2 EEPROM Read

In MCT8315A, EEPROM read procedure is as follows,

1. Write 0x40000000 into register 0x0000E6 to read the EEPROM data into the shadow registers (0x000080-0x0000AE).
2. Wait for 100ms for the EEPROM read operation to complete.
3. Read the shadow register values, 1 or 2 registers at a time, using the I$^2$C read command as explained in Section 7.6.2. Shadow register addresses are in the range of 0x000080-0x0000AE. Register address increases in steps of 2 for 32-bit read operation (since each address is a 16-bit location).

### 7.6.2 I$^2$C Serial Interface

MCT8315A interfaces with an external MCU over an I$^2$C serial interface. MCT8315A is an I$^2$C target to be interfaced with a controller. External MCU can use this interface to read/write from/to any non-reserved register in MCT8315A

**Note**

For reliable communication, a 100-µs delay should be used between every byte transferred over the I$^2$C bus.

#### 7.6.2.1 I$^2$C Data Word

The I$^2$C data word format is shown in Table 7-4.

**Table 7-4. I$^2$C Data Word Format**

| TARGET_ID | R/W | CONTROL WORD | DATA | CRC-8 |
|---|---|---|---|---|
| A6 - A0 | W0 | CW23 - CW0 | D15 / D31/ D63 - D0 | C7 - C0 |

**Target ID and R/W Bit**: The first byte includes the 7-bit I$^2$C target ID (default 0x00, but can be modified by setting I2C_TARGET_ADDR), followed by the read/write command bit. Every packet in MCT8315A the communication protocol starts with writing a 24-bit control word and hence the R/W bit is always 0.

**24-bit Control Word**: The Target Address is followed by a 24-bit control bit. The control word format is shown in Table 7-5.

**Table 7-5. 24-bit Control Word Format**

| OP_R/W | CRC_EN | DLEN | MEM_SEC | MEM_PAGE | MEM_ADDR |
|---|---|---|---|---|---|
| CW23 | CW22 | CW21- CW20 | CW19 - CW16 | CW15 - CW12 | CW11 - CW0 |

Each field in the control word is explained in detail below.

**OP_R/W – Read/Write**: R/W bit gives information on whether this is a read (1b) operation or write (0b) operation. For write operation, MCT8315A will expect data bytes to be sent after the 24-bit control word. For read operation, MCT8315A will expect an I$^2$C read request with repeated start or normal start after the 24-bit control word.

**CRC_EN – Cyclic Redundancy Check(CRC) Enable**: MCT8315A supports CRC to verify the data integrity. This bit controls whether the CRC feature is enabled or not.

**DLEN – Data Length**: DLEN field determines the length of the data that will be sent by external MCU to MCT8315A. MCT8315A protocol supports three data lengths: 16-bit, 32-bit and 64-bit.

**Table 7-6. Data Length Configuration**

| DLEN Value | Data Length |
|---|---|
| 00b | 16-bit |
| 01b | 32-bit |
| 10b | 64-bit |
| 11b | Reserved |


Copyright © 2023 Texas Instruments Incorporated

**MEM_SEC – Memory Section**: Each memory location in MCT8315A is addressed using three separate entities in the control word – Memory Section, Memory Page, Memory Address. Memory Section is a 4-bit field which denotes the memory section to which the memory location belongs like RAM, ROM etc.

**MEM_PAGE – Memory Page**: Memory page is a 4-bit field which denotes the memory page to which the memory location belongs.

**MEM_ADDR – Memory Address**: Memory address is the last 12-bits of the address. The complete 22-bit address is constructed internally by MCT8315A using all three fields – Memory Section, Memory Page, Memory Address. For memory locations 0x000000-0x000800, memory section is 0x0, memory page is 0x0 and memory address is the lowest 12 bits(0x000 for 0x000000, 0x080 for 0x000080 and 0x800 for 0x000800). All relevant memory locations (EEPROM and RAM variables) have MEM_SEC and MEM_PAGE values both corresponding to 0x0. All other MEM_SEC, MEM_PAGE values are reserved and not for external use.

**Data Bytes**: For a write operation to MCT8315A, the 24-bit control word is followed by data bytes. The DLEN field in the control word should correspond with the number of bytes sent in this section. In case of mismatch between number of data bytes and DLEN, the write operation is discarded.

**CRC Byte**: If the CRC feature is enabled in the control word, CRC byte has to be sent at the end of a write transaction. Refer to Section 7.6.2.6 for detailed information on CRC byte calculation.

#### *7.6.2.2 I²C Write Transaction*

MCT8315A write transaction over I²C involves the following sequence (see Figure 7-54).

1. I²C start condition.
2. Start is followed by the I²C target ID byte, made up of 7-bit target ID along with the R/W bit set to 0b. ACK in yellow box indicates that MCT8315A has processed the received target ID which has matched with it's I²C target ID and therefore will proceed with this transaction. If target ID received does not match with the I²C ID of MCT8315A, then the transaction is ignored. and no ACK is sent by MCT8315A.
3. The target ID byte is followed by the 24-bit control word sent one byte at a time. Bit 23 in the control word is 0b as it is a write transaction. ACK in blue boxes correspond to acknowledgements sent by MCT8315A to the controller that the previous byte (of control word) has been received and next byte can be sent.
4. The 24-bit control word is then followed by the data bytes. The number of data bytes sent by the controller depends on the DLEN field in the control word.
   a. While sending data bytes, the LSB byte is sent first. Refer to Section 7.6.2.4 for more details.
   b. 16-bit/32-bit write – The data sent is written to the address mentioned in control word.
   c. 64-bit Write – 64-bit is treated as two successive 32-bit writes. The address mentioned in control word is taken as Addr_1. Addr_2 is internally calculated by MCT8315A by incrementing Addr_1 by 0x2. A total of 8 data bytes are sent. The first 4 bytes (sent in LSB first) are written to Addr_1 and the next 4 bytes are written to Addr_2.
   d. ACK in blue boxes (after every data byte) correspond to the acknowledgement sent by MCT8315A to the controller that the previous data byte has been received and next data byte can be sent.
5. If CRC is enabled, the packet ends with a CRC byte. CRC is calculated for the entire packet (Target ID + W bit, Control Word, Data Bytes). MCT8315A will send an ACK on receiving the CRC byte.
6. I²C Stop condition from the controller to terminate the transaction.

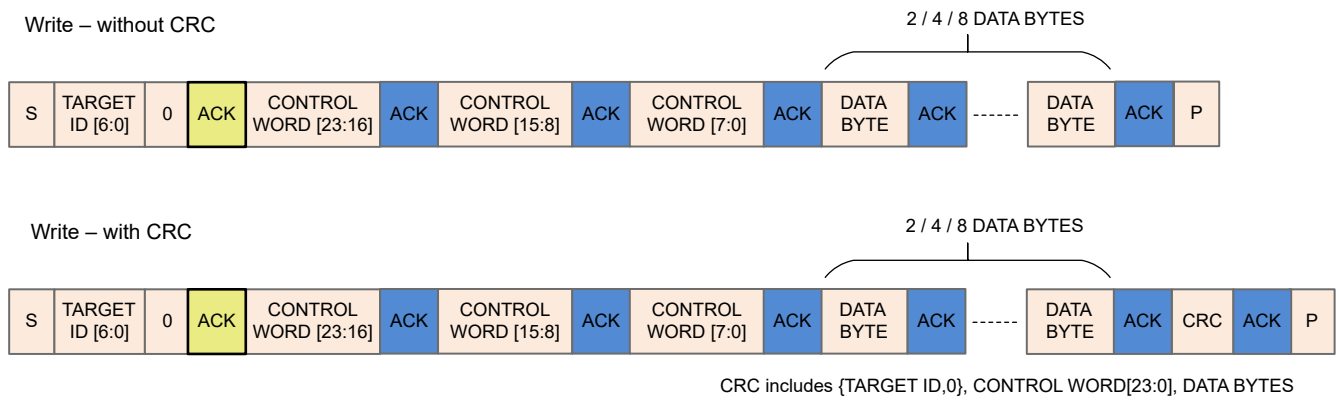


**Figure 7-54. I²C Write Transaction Sequence**

### *7.6.2.3 I²C Read Transaction*

MCT8315A read transaction over I²C involves the following sequence (see Figure 7-55).

1. I²C Start condition from the controller to initiate the transaction.
2. Start is followed by the I²C target ID byte, made up of 7-bit target ID along with the R/W bit set to 0b. ACK (in yellow box) indicates that MCT8315A has processed the received target ID which has matched with it's I²C target ID and therefore will proceed with this transaction. If target ID received does not match with the I²C ID of MCT8315A, then the transaction is ignored and no ACK is sent by MCT8315A.
3. The target ID byte is followed by the 24-bit control word sent one byte at a time. Bit 23 in the control word is set to 1b as it is a read transaction. ACK (in blue boxes) correspond to acknowledgements sent by MCT8315A to the controller that the previous byte (of control word) has been received and next byte can be sent.
4. The control word is followed by a Repeated Start (RS, start without a preceding stop) or normal Start (P followed by S) to initiate the data (to be read back) transfer from MCT8315A to I²C controller. RS or S is followed by the 7-bit target ID along with R/W bit set to 1b to initiate the read transaction. MCT8315A sends an ACK (in grey box after RS) to the controller to acknowledge the receipt of read transaction request.
5. Post acknowledgement of read transaction request, MCT8315A sends the data bytes on SDA one byte at a time. The number of data bytes sent by MCT8315A depends on the DLEN field in the control word.
   a. While sending data bytes, the LSB byte is sent first. Refer the examples in Section 7.6.2.4 for more details.
   b. 16-bit/32-bit Read – The data from the address mentioned in control word is sent back to the controller.
   c. 64-bit Read – 64-bit is treated as two successive 32-bit reads. The address mentioned in control word is taken as Addr_1. Addr_2 is internally calculated by MCT8315A by incrementing Addr_1 by 0x2. A total of 8 data bytes are sent by MCT8315A. The first 4 bytes (sent in LSB first) are read from Addr_1 and the next 4 bytes are read from Addr_2.
   d. ACK in orange boxes correspond to acknowledgements sent by the controller to MCT8315A that the previous byte has been received and next byte can be sent.
6. If CRC is enabled in the control word, then MCT8315A sends an additional CRC byte at the end. Controller has to read the CRC byte and then send the last ACK (in orange). CRC is calculated for the entire packet (Target ID + W bit, Control Word, Target ID + R bit, Data Bytes).
7. I²C Stop condition from the controller to terminate the transaction.


Copyright © 2023 Texas Instruments Incorporated

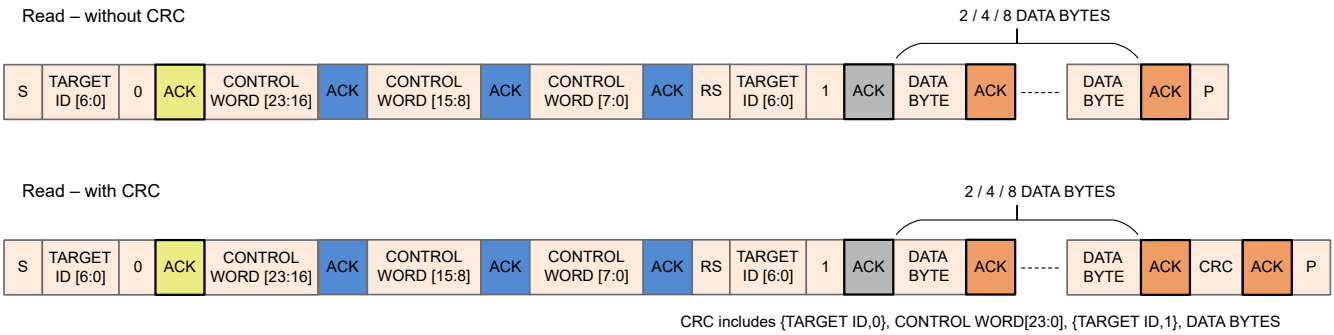


**Figure 7-55. I²C Read Transaction Sequence**

### *7.6.2.4 I²C Communication Protocol Packet Examples*

All values used in this example section are in hex format. I²C target ID used in the examples is 0x60.

**Example for 32-bit Write Operation**: Address – 0x00000080, Data – 0x1234ABCD, CRC Byte – 0x45 (Sample value; does not match with the actual CRC calculation)

**Table 7-7. Example for 32-bit Write Operation Packet**

| Start Byte | | Control Word 0 | | | | Control Word 1 | | Control Word 2 | Data Bytes | | | | CRC |
|---|---|---|---|---|---|---|---|---|---|---|---|---|---|
| Target ID | I²C Write | OP_R/W | CRC_EN | DLEN | MEM_SEC | MEM_PAGE | MEM_ADDR | MEM_ADDR | DB0 | DB1 | DB2 | DB3 | CRC Byte |
| A6-A0 | W0 | CW23 | CW22 | CW21-CW20 | CW19-CW16 | CW15-CW12 | CW11-CW8 | CW7-CW0 | D7-D0 | D7-D0 | D7-D0 | D7-D0 | C7-C0 |
| 0x60 | 0x0 | 0x0 | 0x1 | 0x1 | 0x0 | 0x0 | 0x0 | 0x80 | 0xCD | 0xAB | 0x34 | 0x12 | 0x45 |
| 0xC0 | | 0x50 | | | | 0x00 | | 0x80 | 0xCD | 0xAB | 0x34 | 0x12 | 0x45 |

**Example for 64-bit Write Operation**: Address - 0x00000080, Data Address 0x00000080 - Data 0x01234567, Data Address 0x00000082 – Data 0x89ABCDEF, CRC Byte – 0x45 (Sample value; does not match with the actual CRC calculation)

**Table 7-8. Example for 64-bit Write Operation Packet**

| Start Byte | | Control Word 0 | | | | Control Word 1 | | Control Word 2 | Data Bytes | CRC |
|---|---|---|---|---|---|---|---|---|---|---|
| Target ID | I²C Write | OP_R/W | CRC_EN | DLEN | MEM_SEC | MEM_PAGE | MEM_ADDR | MEM_ADDR | DB0 - DB7 | CRC Byte |
| A6-A0 | W0 | CW23 | CW22 | CW21-CW20 | CW19-CW16 | CW15-CW12 | CW11-CW8 | CW7-CW0 | [D7-D0] x 8 | C7-C0 |
| 0x60 | 0x0 | 0x0 | 0x1 | 0x2 | 0x0 | 0x0 | 0x0 | 0x80 | 0x67452301EFCDAB89 | 0x45 |
| 0xC0 | | 0x60 | | | | 0x00 | | 0x80 | 0x67452301EFCDAB89 | 0x45 |

**Example for 32-bit Read Operation**: Address – 0x00000080, Data – 0x1234ABCD, CRC Byte – 0x56 (Sample value; does not match with the actual CRC calculation)

**Table 7-9. Example for 32-bit Read Operation Packet**

| Start Byte | | Control Word 0 | | | | Control Word 1 | | Control Word 2 | Start Byte | | Byte 0 | Byte 1 | Byte 2 | Byte 3 | Byte 4 |
|---|---|---|---|---|---|---|---|---|---|---|---|---|---|---|---|
| Target ID | I²C Write | R/W | CRC_EN | DLEN | MEM_SEC | MEM_PAGE | MEM_ADDR | MEM_ADDR | Target ID | I²C Read | DB0 | DB1 | DB2 | DB3 | CRC Byte |
| A6-A0 | W0 | CW23 | CW22 | CW21-CW20 | CW19-CW16 | CW15-CW12 | CW11-CW8 | CW7-CW0 | A6-A0 | W0 | D7-D0 | D7-D0 | D7-D0 | D7-D0 | C7-C0 |
| 0x60 | 0x0 | 0x1 | 0x1 | 0x1 | 0x0 | 0x0 | 0x0 | 0x80 | 0x60 | 0x1 | 0xCD | 0xAB | 0x34 | 0x12 | 0x56 |
| 0xC0 | | 0xD0 | | | | 0x00 | | 0x80 | 0xC1 | | 0xCD | 0xAB | 0x34 | 0x12 | 0x56 |

Copyright © 2023 Texas Instruments Incorporated

#### *7.6.2.5 I²C Clock Stretching*

The I²C peripheral in MCT8315A implements clock stretching under certain conditions when there are pending I²C interrupts waiting to be processed. During clock stretching, MCT8315A pulls SCL low and the I²C bus is unavailable for use by other devices. The following is a list of conditions under which clock stretching can occur:

1. **Start interrupt pending**: There are two scenarios when a start interrupt can result in clock stretching,
   a. When target ID is a match, I²C peripheral in MCT8315A raises a start interrupt request. Until this start interrupt request is processed, clock is stretched. Upon processing this request, clock is released and an ACK (marked in yellow or grey in Figure 7-54 and Figure 7-55) is sent to the controller for continuing with the transaction.
   b. If Start (followed by target ID match) for a new transaction is received when a receive interrupt from previous transaction is yet to be processed, clock is stretched until both the receive interrupt and start interrupt are processed in chronological order. This process ensures that previous transaction is executed correctly before initiating the next transaction.
2. **Receive interrupt pending**: When a receive interrupt is waiting to be processed and the receive register is full which occurs when two successive bytes (data or control) have been received by MCT8315A (separated by one ACK shown as blue boxes in Figure 7-54 and Figure 7-55) without the receive interrupt generated by the first byte being processed. Upon receive of second byte, clock is stretched until receive interrupt generated by the first byte is processed.
3. **Transmit buffer is empty**: In case of a transmit interrupt pending (to send data back to controller), if the transmit buffer is waiting to be populated with data to be read back to the controller, clock stretching is done until the transmit buffer is populated with requested data. After the buffer is populated, clock is released and data is sent to controller.

**Note**

I²C clock stretching is timed out after 5 ms by MCT8315A to allow I²C bus access for other devices on the same bus.

#### *7.6.2.6 CRC Byte Calculation*

An 8-bit CCIT polynomial ($x^8 + x^2 + x + 1$) and CRC initial value 0xFF is used for CRC computation.

**CRC Calculation in Write Operation**: When the external MCU writes to MCT8315A, if the CRC is enabled, the external MCU has to compute an 8-bit CRC byte and add the CRC byte at the end of the data. MCT8315A will compute CRC using the same polynomial internally and if there is a mismatch, the write request is discarded. Input data for CRC calculation by external MCU for write operation are listed below:

1. Target ID + write bit.
2. Control word – 3 bytes
3. Data bytes – 2/4/8 bytes

**CRC Calculation in Read Operation**: When the external MCU reads from MCT8315A, if the CRC is enabled, MCT8315A sends the CRC byte at the end of the data. The CRC computation in read operation involves the start byte, control words sent by external MCU along with data bytes sent by MCT8315A. Input data for CRC calculation by external MCU to verify the data sent by MCT8315A are listed below :

1. Target ID + write bit
2. Control word – 3 bytes
3. Target ID + read bit
4. Data bytes – 2/4/8 bytes


Copyright © 2023 Texas Instruments Incorporated

## 7.7 EEPROM (Non-Volatile) Register Map

### 7.7.1 Algorithm_Configuration Registers

Table 7-10 lists the memory-mapped registers for the Algorithm_Configuration registers. All register offset addresses not listed in Table 7-10 should be considered as reserved locations and the register contents should not be modified.

**Table 7-10. ALGORITHM_CONFIGURATION Registers**

| Offset | Acronym | Register Name | Section |
|---|---|---|---|
| 80h | ISD_CONFIG | ISD configuration | ISD_CONFIG Register (Offset = 80h) [Reset = 00000000h] |
| 82h | MOTOR_STARTUP1 | Motor start-up configuration 1 | MOTOR_STARTUP1 Register (Offset = 82h) [Reset = 00000000h] |
| 84h | MOTOR_STARTUP2 | Motor start-up configuration 2 | MOTOR_STARTUP2 Register (Offset = 84h) [Reset = X] |
| 86h | CLOSED_LOOP1 | Closed loop configuration 1 | CLOSED_LOOP1 Register (Offset = 86h) [Reset = 00000000h] |
| 88h | CLOSED_LOOP2 | Closed loop configuration 2 | CLOSED_LOOP2 Register (Offset = 88h) [Reset = 00000000h] |
| 8Ah | CLOSED_LOOP3 | Closed loop configuration 3 | CLOSED_LOOP3 Register (Offset = 8Ah) [Reset = 14000000h] |
| 8Ch | CLOSED_LOOP4 | Closed loop configuration 4 | CLOSED_LOOP4 Register (Offset = 8Ch) [Reset = 00000000h] |
| 8Eh | CONST_SPEED | Constant speed configuration | CONST_SPEED Register (Offset = 8Eh) [Reset = 00000000h] |
| 90h | CONST_PWR | Constant power configuration | CONST_PWR Register (Offset = 90h) [Reset = 00000000h] |
| 96h | 150_DEG_TWO_PH_PROFILE | 150° Two-ph profile | 150_DEG_TWO_PH_PROFILE Register (Offset = 96h) [Reset = 00000000h] |
| 98h | 150_DEG_THREE_PH_PROFIL E | 150° Three-ph profile | 150_DEG_THREE_PH_PROFILE Register (Offset = 98h) [Reset = 00000000h] |
| 9Ah | TRAP_CONFIG1 | Trap configuration 1 | TRAP_CONFIG1 Register (Offset = 9Ah) [Reset = 00000000h] |
| 9Ch | TRAP_CONFIG2 | Trap configuration 2 | TRAP_CONFIG2 Register (Offset = 9Ch) [Reset = 00200000h] |

Complex bit access types are encoded to fit into small table cells. Table 7-11 shows the codes that are used for access types in this section.

**Table 7-11. Algorithm_Configuration Access Type Codes**

| Access Type | Code | Description |
|---|---|---|
| **Read Type** | | |
| R | R | Read |
| **Write Type** | | |
| W | W | Write |
| **Reset or Default Value** | | |
| *-n* | | Value after reset or the default value |

#### 7.7.1.1 ISD_CONFIG Register (Offset = 80h) [Reset = 00000000h]

ISD_CONFIG is shown in Figure 7-56 and described in Table 7-12.

Return to the Summary Table.

Register to configure initial speed detect settings

**Figure 7-56. ISD_CONFIG Register**

| 31 | 30 | 29 | 28 | 27 | 26 | 25 | 24 |
|---|---|---|---|---|---|---|---|
| PARITY | ISD_EN | BRAKE_EN | HIZ_EN | RVS_DR_EN | RESYNC_EN | STAT_BRK_EN | STAT_DETECT_THR |
| R/W-0h | R/W-0h | R/W-0h | R/W-0h | R/W-0h | R/W-0h | R/W-0h | R/W-0h |
| **23** | **22** | **21** | **20** | **19** | **18** | **17** | **16** |
| STAT_DETECT_THR | | BRK_MODE | RESERVED | RESERVED | | | BRK_TIME |
| R/W-0h | | R/W-0h | R/W-0h | R/W-0h | | | R/W-0h |
| **15** | **14** | **13** | **12** | **11** | **10** | **9** | **8** |
| BRK_TIME | | | HIZ_TIME | | | | STARTUP_BRK_TIME |
| R/W-0h | | | R/W-0h | | | | R/W-0h |
| **7** | **6** | **5** | **4** | **3** | **2** | **1** | **0** |
| STARTUP_BRK_TIME | | RESYNC_MIN_THRESHOLD | | | RESERVED | | |
| R/W-0h | | R/W-0h | | | R/W-0h | | |

**Table 7-12. ISD_CONFIG Register Field Descriptions**

| Bit | Field | Type | Reset | Description |
|---|---|---|---|---|
| 31 | PARITY | R/W | 0h | Parity bit |
| 30 | ISD_EN | R/W | 0h | ISD enable<br>0h = Disable<br>1h = Enable |
| 29 | BRAKE_EN | R/W | 0h | Brake enable<br>0h = Disable<br>1h = Enable |
| 28 | HIZ_EN | R/W | 0h | Hi-Z enable<br>0h = Disable<br>1h = Enable |
| 27 | RVS_DR_EN | R/W | 0h | Reverse drive enable<br>0h = Disable<br>1h = Enable |
| 26 | RESYNC_EN | R/W | 0h | Resynchronization enable<br>0h = Disable<br>1h = Enable |
| 25 | STAT_BRK_EN | R/W | 0h | Enable or disable brake during stationary<br>0h = Disable<br>1h = Enable |
| 24-22 | STAT_DETECT_THR | R/W | 0h | Stationary BEMF detect threshold<br>0h = 5 mV<br>1h = 10 mV<br>2h = 15 mV<br>3h = 20 mV<br>4h = 25 mV<br>5h = 30 mV<br>6h = 50 mV<br>7h = 100 mV |
| 21 | BRK_MODE | R/W | 0h | Brake mode<br>0h = All three low-side FETs turned ON<br>1h = All three high-side FETs turned ON |


Copyright © 2023 Texas Instruments Incorporated

**Table 7-12. ISD_CONFIG Register Field Descriptions (continued)**

| Bit | Field | Type | Reset | Description |
|---|---|---|---|---|
| 20 | RESERVED | R/W | 0h | Reserved |
| 19-17 | RESERVED | R/W | 0h | Reserved |
| 16-13 | BRK_TIME | R/W | 0h | Brake time<br>0h = 10 ms<br>1h = 50 ms<br>2h = 100 ms<br>3h = 200 ms<br>4h = 300 ms<br>5h = 400 ms<br>6h = 500 ms<br>7h = 750 ms<br>8h = 1 s<br>9h = 2 s<br>Ah = 3 s<br>Bh = 4 s<br>Ch = 5 s<br>Dh = 7.5 s<br>Eh = 10 s<br>Fh = 15 s |
| 12-9 | HIZ_TIME | R/W | 0h | Hi-Z time<br>0h = 10 ms<br>1h = 50 ms<br>2h = 100 ms<br>3h = 200 ms<br>4h = 300 ms<br>5h = 400 ms<br>6h = 500 ms<br>7h = 750 ms<br>8h = 1 s<br>9h = 2 s<br>Ah = 3 s<br>Bh = 4 s<br>Ch = 5 s<br>Dh = 7.5 s<br>Eh = 10 s<br>Fh = 15 s |
| 8-6 | STARTUP_BRK_TIME | R/W | 0h | Brake time when motor is stationary<br>0h = 1 ms<br>1h = 10 ms<br>2h = 25 ms<br>3h = 50 ms<br>4h = 100 ms<br>5h = 250 ms<br>6h = 500 ms<br>7h = 1000 ms |
| 5-3 | RESYNC_MIN_THRESHOLD | R/W | 0h | Minimum phase BEMF below which the motor is coasted instead of resync<br>0h = computed based on MIN_DUTY<br>1h = 300 mV<br>2h = 400 mV<br>3h = 500 mV<br>4h = 600 mV<br>5h = 800 mV<br>6h = 1000 mV<br>7h = 1250 mV |
| 2-0 | RESERVED | R/W | 0h | Reserved |

Copyright © 2023 Texas Instruments Incorporated

#### 7.7.1.2 MOTOR_STARTUP1 Register (Offset = 82h) [Reset = 00000000h]

MOTOR_STARTUP1 is shown in Figure 7-57 and described in Table 7-13.

Return to the Summary Table.

Register to configure motor startup settings1

**Figure 7-57. MOTOR_STARTUP1 Register**

| 31 | 30 | 29 | 28 | 27 | 26 | 25 | 24 |
|---|---|---|---|---|---|---|---|
| PARITY | MTR_STARTUP | | ALIGN_RAMP_RATE | | | | ALIGN_TIME |
| R/W-0h | R/W-0h | | R/W-0h | | | | R/W-0h |
| **23** | **22** | **21** | **20** | **19** | **18** | **17** | **16** |
| ALIGN_TIME | | | ALIGN_CURR_THR | | | | IPD_CLK_FREQ |
| R/W-0h | | | R/W-0h | | | | R/W-0h |
| **15** | **14** | **13** | **12** | **11** | **10** | **9** | **8** |
| IPD_CLK_FREQ | | IPD_CURR_THR | | | | IPD_RLS_MODE | |
| R/W-0h | | R/W-0h | | | | R/W-0h | |
| **7** | **6** | **5** | **4** | **3** | **2** | **1** | **0** |
| IPD_ADV_ANGLE | | IPD_REPEAT | | SLOW_FIRST_CYC_FREQ | | | |
| R/W-0h | | R/W-0h | | R/W-0h | | | |

**Table 7-13. MOTOR_STARTUP1 Register Field Descriptions**

| Bit | Field | Type | Reset | Description |
|---|---|---|---|---|
| 31 | PARITY | R/W | 0h | Parity bit |
| 30-29 | MTR_STARTUP | R/W | 0h | Motor start-up method<br>0h = Align<br>1h = Double Align<br>2h = IPD<br>3h = Slow first cycle |
| 28-25 | ALIGN_RAMP_RATE | R/W | 0h | Align voltage ramp rate<br>0h = 0.1 V/s<br>1h = 0.2 V/s<br>2h = 0.5 V/s<br>3h = 1 V/s<br>4h = 2.5 V/s<br>5h = 5 V/s<br>6h = 7.5 V/s<br>7h = 10 V/s<br>8h = 25 V/s<br>9h = 50 V/s<br>Ah = 75 V/s<br>Bh = 100 V/s<br>Ch = 250 V/s<br>Dh = 500 V/s<br>Eh = 750 V/s<br>Fh = 1000 V/s |


Copyright © 2023 Texas Instruments Incorporated

**Table 7-13. MOTOR_STARTUP1 Register Field Descriptions (continued)**

| Bit | Field | Type | Reset | Description |
|---|---|---|---|---|
| 24-21 | ALIGN_TIME | R/W | 0h | Align time<br>0h = 5 ms<br>1h = 10 ms<br>2h = 25 ms<br>3h = 50 ms<br>4h = 75 ms<br>5h = 100 ms<br>6h = 200 ms<br>7h = 400 ms<br>8h = 600 ms<br>9h = 800 ms<br>Ah = 1 s<br>Bh = 2 s<br>Ch = 4 s<br>Dh = 6 s<br>Eh = 8 s<br>Fh = 10 s |
| 20-17 | ALIGN_CURR_THR | R/W | 0h | Align current threshold (Align current threshold (A) = ALIGN_CURR_THR / CSA_GAIN)<br>0h = Reserved<br>1h = 0.1V<br>2h = 0.2 V<br>3h = 0.3 V<br>4h = 0.4 V<br>5h = 0.5 V<br>6h = 0.6 V<br>7h = 0.7 V<br>8h = 0.8 V<br>9h = 0.9 V<br>Ah = 1 V<br>Bh = 1.1 V<br>Ch = 1.2 V<br>Dh = 1.3 V<br>Eh = 1.4 V<br>Fh = 1.5 V |
| 16-14 | IPD_CLK_FREQ | R/W | 0h | IPD clock frequency<br>0h = 50 Hz<br>1h = 100 Hz<br>2h = 250 Hz<br>3h = 500 Hz<br>4h = 1000 Hz<br>5h = 2000 Hz<br>6h = 5000 Hz<br>7h = 10000 Hz |
| 13-10 | IPD_CURR_THR | R/W | 0h | IPD current threshold (IPD current threshold (A) = IPD_CURR_THR / CSA_GAIN)<br>0h = Reserved<br>1h = Reserved<br>2h = 0.2 V<br>3h = 0.3 V<br>4h = 0.4 V<br>5h = 0.5 V<br>6h = 0.6 V<br>7h = 0.7 V<br>8h = 0.8 V<br>9h = 0.9 V<br>Ah = 1 V<br>Bh = 1.1 V<br>Ch = 1.2 V<br>Dh = 1.3 V<br>Eh = 1.4 V<br>Fh = 1.5 V |

Copyright © 2023 Texas Instruments Incorporated

**Table 7-13. MOTOR_STARTUP1 Register Field Descriptions (continued)**

| Bit | Field | Type | Reset | Description |
|---|---|---|---|---|
| 9-8 | IPD_RLS_MODE | R/W | 0h | IPD release mode<br>0h = Brake<br>1h = Tristate<br>2h = Reserved<br>3h = Reserved |
| 7-6 | IPD_ADV_ANGLE | R/W | 0h | IPD advance angle<br>0h = 0°<br>1h = 30°<br>2h = 60°<br>3h = 90° |
| 5-4 | IPD_REPEAT | R/W | 0h | Number of times IPD is executed<br>0h = one<br>1h = average of 2 times<br>2h = average of 3 times<br>3h = average of 4 times |
| 3-0 | SLOW_FIRST_CYC_FREQ | R/W | 0h | Frequency of first cycle<br>0h = 0.05 Hz<br>1h = 0.1 Hz<br>2h = 0.25 Hz<br>3h = 0.5 Hz<br>4h = 1 Hz<br>5h = 2 Hz<br>6h = 3 Hz<br>7h = 5 Hz<br>8h = 10 Hz<br>9h = 15 Hz<br>Bh = 25 Hz<br>Ch = 50 Hz<br>Dh = 100 Hz<br>Eh = 150 Hz<br>Fh = 200 Hz |


Copyright © 2023 Texas Instruments Incorporated

### 7.7.1.3 MOTOR_STARTUP2 Register (Offset = 84h) [Reset = X]

MOTOR_STARTUP2 is shown in Figure 7-58 and described in Table 7-14.

Return to the Summary Table.

Register to configure motor startup settings2

**Figure 7-58. MOTOR_STARTUP2 Register**

| 31 | 30 | 29 | 28 | 27 | 26 | 25 | 24 |
|---|---|---|---|---|---|---|---|
| PARITY | OL_ILIMIT_CONFIG | OL_DUTY | | | OL_ILIMIT | | |
| R/W-0h | R/W-0h | R/W-0h | | | R/W-0h | | |
| **23** | **22** | **21** | **20** | **19** | **18** | **17** | **16** |
| OL_ILIMIT | OL_ACC_A1 | | | | | OL_ACC_A2 | |
| R/W-0h | R/W-0h | | | | | R/W-0h | |
| **15** | **14** | **13** | **12** | **11** | **10** | **9** | **8** |
| OL_ACC_A2 | | | OPN_CL_HANDOFF_THR | | | | |
| R/W-0h | | | R/W-0h | | | | |
| **7** | **6** | **5** | **4** | **3** | **2** | **1** | **0** |
| AUTO_HANDOFF | FIRST_CYCLE_FREQ_SEL | MIN_DUTY | | | | RESERVED | |
| R/W-0h | R/W-0h | R/W-0h | | | | R-X | |

**Table 7-14. MOTOR_STARTUP2 Register Field Descriptions**

| Bit | Field | Type | Reset | Description |
|---|---|---|---|---|
| 31 | PARITY | R/W | 0h | Parity bit |
| 30 | OL_ILIMIT_CONFIG | R/W | 0h | Open loop current limit configuration<br>0h = Open loop current limit defined by OL_ILIMIT<br>1h = Open loop current limit defined by ILIMIT |
| 29-27 | OL_DUTY | R/W | 0h | Duty cycle limit during open loop<br>0h = 10%<br>1h = 15%<br>2h = 20%<br>3h = 25%<br>4h = 30%<br>5h = 40%<br>6h = 50%<br>7h = 100% |
| 26-23 | OL_ILIMIT | R/W | 0h | Open loop current limit (OL current threshold (A) = OL_CURR_THR / CSA_GAIN)<br>0h = Reserved<br>1h = 0.1V<br>2h = 0.2 V<br>3h = 0.3 V<br>4h = 0.4 V<br>5h = 0.5 V<br>6h = 0.6 V<br>7h = 0.7 V<br>8h = 0.8 V<br>9h = 0.9 V<br>Ah = 1 V<br>Bh = 1.1 V<br>Ch = 1.2 V<br>Dh = 1.3 V<br>Eh = 1.4 V<br>Fh = 1.5 V |

Copyright © 2023 Texas Instruments Incorporated

**Table 7-14. MOTOR_STARTUP2 Register Field Descriptions (continued)**

| Bit | Field | Type | Reset | Description |
|---|---|---|---|---|
| 22-18 | OL_ACC_A1 | R/W | 0h | Open loop acceleration A1<br>0h = 0.005 Hz/s<br>1h = 0.01 Hz/s<br>2h = 0.025 Hz/s<br>3h = 0.05 Hz/s<br>4h = 0.1 Hz/s<br>5h = 0.25 Hz/s<br>6h = 0.5 Hz/s<br>7h = 1 Hz/s<br>8h = 2.5 Hz/s<br>9h = 5 Hz/s<br>Ah = 7.5 Hz/s<br>Bh = 10 Hz/s<br>Ch = 12.5 Hz/s<br>Dh = 15 Hz/s<br>Eh = 20 Hz/s<br>Fh = 30 Hz/s<br>10h = 40 Hz/s<br>11h = 50 Hz/s<br>12h = 60 Hz/s<br>13h = 75 Hz/s<br>14h = 100 Hz/s<br>15h = 125 Hz/s<br>16h = 150 Hz/s<br>17h = 175 Hz/s<br>18h = 200 Hz/s<br>19h = 250 Hz/s<br>1Ah = 300 Hz/s<br>1Bh = 400 Hz/s<br>1Ch = 500 Hz/s<br>1Dh = 750 Hz/s<br>1Eh = 1000 Hz/s<br>1Fh = No Limit (32767) Hz/s |


Copyright © 2023 Texas Instruments Incorporated

**Table 7-14. MOTOR_STARTUP2 Register Field Descriptions (continued)**

| Bit | Field | Type | Reset | Description |
|---|---|---|---|---|
| 17-13 | OL_ACC_A2 | R/W | 0h | Open loop acceleration A2<br>0h = 0.005 Hz/s2<br>1h = 0.01 Hz/s2<br>2h = 0.025 Hz/s2<br>3h = 0.05 Hz/s2<br>4h = 0.1 Hz/s2<br>5h = 0.25 Hz/s2<br>6h = 0.5 Hz/s2<br>7h = 1 Hz/s2<br>8h = 2.5 Hz/s2<br>9h = 5 Hz/s2<br>Ah = 7.5 Hz/s2<br>Bh = 10 Hz/s2<br>Ch = 12.5 Hz/s2<br>Dh = 15 Hz/s2<br>Eh = 20 Hz/s2<br>Fh = 30 Hz/s2<br>10h = 40 Hz/s2<br>11h = 50 Hz/s2<br>12h = 60 Hz/s2<br>13h = 75 Hz/s2<br>14h = 100 Hz/s2<br>15h = 125 Hz/s2<br>16h = 150 Hz/s2<br>17h = 175 Hz/s2<br>18h = 200 Hz/s2<br>19h = 250 Hz/s2<br>1Ah = 300 Hz/s2<br>1Bh = 400 Hz/s2<br>1Ch = 500 Hz/s2<br>1Dh = 750 Hz/s2<br>1Eh = 1000 Hz/s2<br>1Fh = No Limit (32767) Hz/s2 |

Copyright © 2023 Texas Instruments Incorporated

**Table 7-14. MOTOR_STARTUP2 Register Field Descriptions (continued)**

| Bit | Field | Type | Reset | Description |
|---|---|---|---|---|
| 12-8 | OPN_CL_HANDOFF_THR | R/W | 0h | Open to closed loop handoff threshold<br>0h = 1 Hz<br>1h = 4 Hz<br>2h = 8 Hz<br>3h = 12 Hz<br>4h = 16 Hz<br>5h = 20 Hz<br>6h = 24 Hz<br>7h = 28 Hz<br>8h = 32 Hz<br>9h = 36 Hz<br>Ah = 40 Hz<br>Bh = 45 Hz<br>Ch = 50 Hz<br>Dh = 55 Hz<br>Eh = 60 Hz<br>Fh = 65 Hz<br>10h = 70 Hz<br>11h = 75 Hz<br>12h = 80 Hz<br>13h = 85 Hz<br>14h = 90 Hz<br>15h = 100 Hz<br>16h = 150 Hz<br>17h = 200 Hz<br>18h = 250 Hz<br>19h = 300 Hz<br>1Ah = 350 Hz<br>1Bh = 400 Hz<br>1Ch = 450 Hz<br>1Dh = 500 Hz<br>1Eh = 550 Hz<br>1Fh = 600 Hz |
| 7 | AUTO_HANDOFF | R/W | 0h | Auto handoff enable<br>0h = Disable Auto Handoff (and use OPN_CL_HANDOFF_THR)<br>1h = Enable Auto Handoff |
| 6 | FIRST_CYCLE_FREQ_SEL | R/W | 0h | First cycle frequency select<br>0h = Defined by SLOW_FIRST_CYC_FREQ<br>1h = 0 Hz |
| 5-2 | MIN_DUTY | R/W | 0h | Min operational duty cycle<br>0h = 1.5 %<br>1h = 2 %<br>2h = 3 %<br>3h = 4 %<br>4h = 5 %<br>5h = 6 %<br>6h = 7 %<br>7h = 8 %<br>8h = 9 %<br>9h = 10 %<br>Ah = 12 %<br>Bh = 15 %<br>Ch = 17.5 %<br>Dh = 20 %<br>Eh = 25 %<br>Fh = 30 % |
| 1-0 | RESERVED | R | X | Reserved |


Copyright © 2023 Texas Instruments Incorporated

#### 7.7.1.4 CLOSED_LOOP1 Register (Offset = 86h) [Reset = 00000000h]

CLOSED_LOOP1 is shown in Figure 7-59 and described in Table 7-15.

Return to the Summary Table.

Register to configure close loop settings1

**Figure 7-59. CLOSED_LOOP1 Register**

| 31 | 30 | 29 | 28 | 27 | 26 | 25 | 24 |
|---|---|---|---|---|---|---|---|
| PARITY | COMM_CONTROL | | CL_ACC | | | | |
| R/W-0h | R/W-0h | | R/W-0h | | | | |
| **23** | **22** | **21** | **20** | **19** | **18** | **17** | **16** |
| CL_DEC_CONFIG | CL_DEC | | | | | PWM_FREQ_OUT | |
| R/W-0h | R/W-0h | | | | | R/W-0h | |
| **15** | **14** | **13** | **12** | **11** | **10** | **9** | **8** |
| PWM_FREQ_OUT | | | PWM_MODUL | | PWM_MODE | LD_ANGLE_POLARITY | LD_ANGLE |
| R/W-0h | | | R/W-0h | | R/W-0h | R/W-0h | R/W-0h |
| **7** | **6** | **5** | **4** | **3** | **2** | **1** | **0** |
| LD_ANGLE | | | | | | | RESERVED |
| R/W-0h | | | | | | | R/W-0h |

**Table 7-15. CLOSED_LOOP1 Register Field Descriptions**

| Bit | Field | Type | Reset | Description |
|---|---|---|---|---|
| 31 | PARITY | R/W | 0h | Parity bit |
| 30-29 | COMM_CONTROL | R/W | 0h | Trapezoidal commutation mode<br>0h = 120° Commutation<br>1h = Variable commutation between 120° and 150°<br>2h = Reserved<br>3h = Reserved |

Copyright © 2023 Texas Instruments Incorporated

**Table 7-15. CLOSED_LOOP1 Register Field Descriptions (continued)**

| Bit | Field | Type | Reset | Description |
|---|---|---|---|---|
| 28-24 | CL_ACC | R/W | 0h | Closed loop acceleration rate<br>0h = 0.005 V/s<br>1h = 0.01 V/s<br>2h = 0.025 V/s<br>3h = 0.05 V/s<br>4h = 0.1 V/s<br>5h = 0.25 V/s<br>6h = 0.5 V/s<br>7h = 1 V/s<br>8h = 2.5 V/s<br>9h = 5 V/s<br>Ah = 7.5 V/s<br>Bh = 10 V/s<br>Ch = 12.5 V/s<br>Dh = 15 V/s<br>Eh = 20 V/s<br>Fh = 30 V/s<br>10h = 40 V/s<br>11h = 50 V/s<br>12h = 60 V/s<br>13h = 75 V/s<br>14h = 100 V/s<br>15h = 125 V/s<br>16h = 150 V/s<br>17h = 175 V/s<br>18h = 200 V/s<br>19h = 250 V/s<br>1Ah = 300 V/s<br>1Bh = 400 V/s<br>1Ch = 500 V/s<br>1Dh = 750 V/s<br>1Eh = 1000 V/s<br>1Fh = 32767 V/s |
| 23 | CL_DEC_CONFIG | R/W | 0h | Closed loop decel configuration<br>0h = Close loop deceleration defined by CL_DEC<br>1h = Close loop deceleration defined by CL_ACC |


Copyright © 2023 Texas Instruments Incorporated

**Table 7-15. CLOSED_LOOP1 Register Field Descriptions (continued)**

| Bit | Field | Type | Reset | Description |
|---|---|---|---|---|
| 22-18 | CL_DEC | R/W | 0h | Closed loop deceleration rate<br>0h = 0.005 V/s<br>1h = 0.01 V/s<br>2h = 0.025 V/s<br>3h = 0.05 V/s<br>4h = 0.1 V/s<br>5h = 0.25 V/s<br>6h = 0.5 V/s<br>7h = 1 V/s<br>8h = 2.5 V/s<br>9h = 5 V/s<br>Ah = 7.5 V/s<br>Bh = 10 V/s<br>Ch = 12.5 V/s<br>Dh = 15 V/s<br>Eh = 20 V/s<br>Fh = 30 V/s<br>10h = 40 V/s<br>11h = 50 V/s<br>12h = 60 V/s<br>13h = 75 V/s<br>14h = 100 V/s<br>15h = 125 V/s<br>16h = 150 V/s<br>17h = 175 V/s<br>18h = 200 V/s<br>19h = 250 V/s<br>1Ah = 300 V/s<br>1Bh = 400 V/s<br>1Ch = 500 V/s<br>1Dh = 750 V/s<br>1Eh = 1000 V/s<br>1Fh = 32767 V/s |

Copyright © 2023 Texas Instruments Incorporated

**Table 7-15. CLOSED_LOOP1 Register Field Descriptions (continued)**

| Bit | Field | Type | Reset | Description |
|---|---|---|---|---|
| 17-13 | PWM_FREQ_OUT | R/W | 0h | Output PWM switching frequency<br>0h = 5 kHz<br>1h = 6 kHz<br>2h = 7 kHz<br>3h = 8 kHz<br>4h = 9 kHz<br>5h = 10 kHz<br>6h = 11 kHz<br>7h = 12 kHz<br>8h = 13 kHz<br>9h = 14 kHz<br>Ah = 15 kHz<br>Bh = 16 kHz<br>Ch = 17 kHz<br>Dh = 18 kHz<br>Eh = 19 kHz<br>Fh = 20 kHz<br>10h = 25 kHz<br>11h = 30 kHz<br>12h = 35 kHz<br>13h = 40 kHz<br>14h = 45 kHz<br>15h = 50 kHz<br>16h = 55 kHz<br>17h = 60 kHz<br>18h = 65 kHz<br>19h = 70 kHz<br>1Ah = 75 kHz<br>1Bh = 80 kHz<br>1Ch = 85 kHz<br>1Dh = 90 kHz<br>1Eh = 95 kHz<br>1Fh = 100 kHz |
| 12-11 | PWM_MODUL | R/W | 0h | PWM modulation.<br>0h = High-Side Modulation<br>1h = Low-Side Modulation<br>2h = Mixed Modulation<br>3h = Reserved |
| 10 | PWM_MODE | R/W | 0h | PWM mode<br>0h = Single Ended Mode<br>1h = Complementary Mode |
| 9 | LD_ANGLE_POLARITY | R/W | 0h | Polarity of applied lead angle<br>0h = Negative<br>1h = Positive |
| 8-1 | LD_ANGLE | R/W | 0h | Lead Angle {Lead Angle (deg) = LD_ANGLE * 0.12} |
| 0 | RESERVED | R/W | 0h | Reserved |


Copyright © 2023 Texas Instruments Incorporated

#### 7.7.1.5 CLOSED_LOOP2 Register (Offset = 88h) [Reset = 00000000h]

CLOSED_LOOP2 is shown in Figure 7-60 and described in Table 7-16.

Return to the Summary Table.

Register to configure close loop settings2

**Figure 7-60. CLOSED_LOOP2 Register**

| 31 | 30 | 29 | 28 | 27 | 26 | 25 | 24 |
|---|---|---|---|---|---|---|---|
| PARITY | FG_SEL | | FG_DIV_FACTOR | | | | RESERVED |
| R/W-0h | R/W-0h | | R/W-0h | | | | R/W-0h |
| **23** | **22** | **21** | **20** | **19** | **18** | **17** | **16** |
| FG_BEMF_THR | | | MTR_STOP | | | MTR_STOP_BRK_TIME | |
| R/W-0h | | | R/W-0h | | | R/W-0h | |
| **15** | **14** | **13** | **12** | **11** | **10** | **9** | **8** |
| MTR_STOP_BRK_TIME | | ACT_SPIN_BRK_THR | | | BRAKE_DUTY_THRESHOLD | | |
| R/W-0h | | R/W-0h | | | R/W-0h | | |
| **7** | **6** | **5** | **4** | **3** | **2** | **1** | **0** |
| AVS_EN | CBC_ILIMIT | | | | RESERVED | | |
| R/W-0h | R/W-0h | | | | R/W-0h | | |

**Table 7-16. CLOSED_LOOP2 Register Field Descriptions**

| Bit | Field | Type | Reset | Description |
|---|---|---|---|---|
| 31 | PARITY | R/W | 0h | Parity bit |
| 30-29 | FG_SEL | R/W | 0h | FG mode select<br>0h = Output FG in open loop and closed loop<br>1h = Output FG in only closed loop<br>2h = Output FG in open loop for the first try.<br>3h = Reserved |
| 28-25 | FG_DIV_FACTOR | R/W | 0h | FG division factor<br>0h = Divide by 3 (2-pole motor mechanical speed/3)<br>1h = Divide by 1 (2-pole motor mechanical speed)<br>2h = Divide by 2 (4-pole motor mechanical speed)<br>3h = Divide by 3 (6-pole motor mechanical speed)<br>4h = Divide by 4 (8-pole motor mechanical speed)<br>5h = Divide by 5 (10-pole motor mechanical speed)<br>6h = Divide by 6 (12-pole motor mechanical speed)<br>7h = Divide by 7 (14-pole motor mechanical speed)<br>8h = Divide by 8 (16-pole motor mechanical speed)<br>9h = Divide by 9 (18-pole motor mechanical speed)<br>Ah = Divide by 10 (20-pole motor mechanical speed)<br>Bh = Divide by 11 (22-pole motor mechanical speed)<br>Ch = Divide by 12 (24-pole motor mechanical speed)<br>Dh = Divide by 13 (26-pole motor mechanical speed)<br>Eh = Divide by 14 (28-pole motor mechanical speed)<br>Fh = Divide by 15 (30-pole motor mechanical speed) |
| 24 | RESERVED | R/W | 0h | Reserved |
| 23-21 | FG_BEMF_THR | R/W | 0h | FG output BEMF threshold<br>0h = +/- 1mV<br>1h = +/- 2mV<br>2h = +/- 5mV<br>3h = +/- 10mV<br>4h = +/- 20mV<br>5h = +/- 30mV<br>6h = Reserved<br>7h = Reserved |

Copyright © 2023 Texas Instruments Incorporated

**Table 7-16. CLOSED_LOOP2 Register Field Descriptions (continued)**

| Bit | Field | Type | Reset | Description |
|---|---|---|---|---|
| 20-18 | MTR_STOP | R/W | 0h | Motor stop method<br>0h = Hi-z<br>1h = Recirculation<br>2h = Low-side braking<br>3h = High-side braking<br>4h = Active spin down<br>5h = Reserved<br>6h = Reserved<br>7h = Reserved |
| 17-14 | MTR_STOP_BRK_TIME | R/W | 0h | Brake time during motor stop<br>0h = 1 ms<br>1h = 2 ms<br>2h = 5 ms<br>3h = 10 ms<br>4h = 15 ms<br>5h = 25 ms<br>6h = 50 ms<br>7h = 75 ms<br>8h = 100 ms<br>9h = 250 ms<br>Ah = 500 ms<br>Bh = 1000 ms<br>Ch = 2500 ms<br>Dh = 5000 ms<br>Eh = 10000 ms<br>Fh = 15000 ms |
| 13-11 | ACT_SPIN_BRK_THR | R/W | 0h | Duty cycle threshold for motor stop using active spin down, low- and high-side braking<br>0h = Immediate<br>1h = 50 %<br>2h = 25 %<br>3h = 15 %<br>4h = 10 %<br>5h = 7.5 %<br>6h = 5 %<br>7h = 2.5 % |
| 10-8 | BRAKE_DUTY_THRESHOLD | R/W | 0h | Duty cycle threshold for BRAKE pin based low-side braking<br>0h = Immediate<br>1h = 50 %<br>2h = 25 %<br>3h = 15 %<br>4h = 10 %<br>5h = 7.5 %<br>6h = 5 %<br>7h = 2.5 % |
| 7 | AVS_EN | R/W | 0h | AVS enable<br>0h = Disable<br>1h = Enable |


Copyright © 2023 Texas Instruments Incorporated

**Table 7-16. CLOSED_LOOP2 Register Field Descriptions (continued)**

| Bit | Field | Type | Reset | Description |
|---|---|---|---|---|
| 6-3 | CBC_ILIMIT | R/W | 0h | Cycle by Cycle (CBC) current limit (CBC current limit (A) = CBC_ILIMIT / CSA_GAIN)<br>0h = Reserved<br>1h = 0.1 V<br>2h = 0.2 V<br>3h = 0.3 V<br>4h = 0.4 V<br>5h = 0.5 V<br>6h = 0.6 V<br>7h = 0.7 V<br>8h = 0.8 V<br>9h = 0.9 V<br>Ah = 1 V<br>Bh = 1.1 V<br>Ch = 1.2 V<br>Dh = 1.3 V<br>Eh = 1.4 V<br>Fh = 1.5 V |
| 2-0 | RESERVED | R/W | 0h | Reserved |

Copyright © 2023 Texas Instruments Incorporated

### 7.7.1.6 CLOSED_LOOP3 Register (Offset = 8Ah) [Reset = 14000000h]

CLOSED_LOOP3 is shown in Figure 7-61 and described in Table 7-17.

Return to the Summary Table.

Register to configure close loop settings3

**Figure 7-61. CLOSED_LOOP3 Register**

| 31 | 30 | 29 | 28 | 27 | 26 | 25 | 24 |
|---|---|---|---|---|---|---|---|
| PARITY | DYN_DGS_FILT_COUNT | | DYN_DGS_UPPER_LIM | | DYN_DGS_LOWER_LIM | | INTEG_CYCL_THR_LOW |
| R/W-0h | R/W-0h | | R/W-2h | | R/W-2h | | R/W-0h |
| **23** | **22** | **21** | **20** | **19** | **18** | **17** | **16** |
| INTEG_CYCL_THR_LOW | INTEG_CYCL_THR_HIGH | | INTEG_DUTY_THR_LOW | | INTEG_DUTY_THR_HIGH | | BEMF_THRESHOLD2 |
| R/W-0h | R/W-0h | | R/W-0h | | R/W-0h | | R/W-0h |
| **15** | **14** | **13** | **12** | **11** | **10** | **9** | **8** |
| BEMF_THRESHOLD2 | | | | | BEMF_THRESHOLD1 | | |
| R/W-0h | | | | | R/W-0h | | |
| **7** | **6** | **5** | **4** | **3** | **2** | **1** | **0** |
| BEMF_THRESHOLD1 | | | INTEG_ZC_METHOD | DEGAUSS_MAX_WIN | | | DYN_DEGAUSS_EN |
| R/W-0h | | | R/W-0h | R/W-0h | | | R/W-0h |

**Table 7-17. CLOSED_LOOP3 Register Field Descriptions**

| Bit | Field | Type | Reset | Description |
|---|---|---|---|---|
| 31 | PARITY | R/W | 0h | Parity bit |
| 30-29 | DYN_DGS_FILT_COUNT | R/W | 0h | Number of samples needed for dynamic degauss check<br>0h = 15<br>1h = 20<br>2h = 30<br>3h = 12 |
| 28-27 | DYN_DGS_UPPER_LIM | R/W | 2h | Dynamic degauss voltage upper bound<br>0h = (VM - 0.09) V<br>1h = (VM - 0.12) V<br>2h = (VM - 0.15) V<br>3h = (VM - 0.18) V |
| 26-25 | DYN_DGS_LOWER_LIM | R/W | 2h | Dynamic degauss voltage lower bound<br>0h = 0.03 V<br>1h = 0.06 V<br>2h = 0.09 V<br>3h = 0.12 V |
| 24-23 | INTEG_CYCL_THR_LOW | R/W | 0h | Number of BEMF samples per 30° below which commutation method switches from integration to ZC<br>0h = 3<br>1h = 4<br>2h = 6<br>3h = 8 |
| 22-21 | INTEG_CYCL_THR_HIGH | R/W | 0h | Number of BEMF samples per 30° above which commutation method switches from ZC to integration<br>0h = 4<br>1h = 6<br>2h = 8<br>3h = 10 |


Copyright © 2023 Texas Instruments Incorporated

**Table 7-17. CLOSED_LOOP3 Register Field Descriptions (continued)**

| Bit | Field | Type | Reset | Description |
|---|---|---|---|---|
| 20-19 | INTEG_DUTY_THR_LOW | R/W | 0h | Duty cycle below which commutation method switches from integration to ZC<br>0h = 12 %<br>1h = 15 %<br>2h = 18 %<br>3h = 20 % |
| 18-17 | INTEG_DUTY_THR_HIGH | R/W | 0h | Duty cycle above which commutation method switches from ZC to integration<br>0h = 12 %<br>1h = 15 %<br>2h = 18 %<br>3h = 20 % |

**Table 7-17. CLOSED_LOOP3 Register Field Descriptions (continued)**

| Bit | Field | Type | Reset | Description |
|---|---|---|---|---|
| 16-11 | BEMF_THRESHOLD2 | R/W | 0h | BEMF threshold for integration based commutation during falling floating phase voltage<br>0h = 0<br>1h = 25<br>2h = 50<br>3h = 75<br>4h = 100<br>5h = 125<br>6h = 150<br>7h = 175<br>8h = 200<br>9h = 225<br>Ah = 250<br>Bh = 275<br>Ch = 300<br>Dh = 325<br>Eh = 350<br>Fh = 375<br>10h = 400<br>11h = 425<br>12h = 450<br>13h = 475<br>14h = 500<br>15h = 525<br>16h = 550<br>17h = 575<br>18h = 600<br>19h = 625<br>1Ah = 650<br>1Bh = 675<br>1Ch = 700<br>1Dh = 725<br>1Eh = 750<br>1Fh = 775<br>20h = 800<br>21h = 850<br>22h = 900<br>23h = 950<br>24h = 1000<br>25h = 1050<br>26h = 1100<br>27h = 1150<br>28h = 1200<br>29h = 1250<br>2Ah = 1300<br>2Bh = 1350<br>2Ch = 1400<br>2Dh = 1450<br>2Eh = 1500<br>2Fh = 1550<br>30h = 1600<br>31h = 1700<br>32h = 1800<br>33h = 1900<br>34h = 2000<br>35h = 2100<br>36h = 2200<br>37h = 2300<br>38h = 2400<br>39h = 2600<br>3Ah = 2800<br>3Bh = 3000<br>3Ch = 3200<br>3Dh = 3400<br>3Eh = 3600<br>3Fh = 3800 |


Copyright © 2023 Texas Instruments Incorporated

**Table 7-17. CLOSED_LOOP3 Register Field Descriptions (continued)**

| Bit | Field | Type | Reset | Description |
|---|---|---|---|---|
| 10-5 | BEMF_THRESHOLD1 | R/W | 0h | BEMF threshold for integration based commutation during rising floating phase voltage<br>0h = 0<br>1h = 25<br>2h = 50<br>3h = 75<br>4h = 100<br>5h = 125<br>6h = 150<br>7h = 175<br>8h = 200<br>9h = 225<br>Ah = 250<br>Bh = 275<br>Ch = 300<br>Dh = 325<br>Eh = 350<br>Fh = 375<br>10h = 400<br>11h = 425<br>12h = 450<br>13h = 475<br>14h = 500<br>15h = 525<br>16h = 550<br>17h = 575<br>18h = 600<br>19h = 625<br>1Ah = 650<br>1Bh = 675<br>1Ch = 700<br>1Dh = 725<br>1Eh = 750<br>1Fh = 775<br>20h = 800<br>21h = 850<br>22h = 900<br>23h = 950<br>24h = 1000<br>25h = 1050<br>26h = 1100<br>27h = 1150<br>28h = 1200<br>29h = 1250<br>2Ah = 1300<br>2Bh = 1350<br>2Ch = 1400<br>2Dh = 1450<br>2Eh = 1500<br>2Fh = 1550<br>30h = 1600<br>31h = 1700<br>32h = 1800<br>33h = 1900<br>34h = 2000<br>35h = 2100<br>36h = 2200<br>37h = 2300<br>38h = 2400<br>39h = 2600<br>3Ah = 2800<br>3Bh = 3000<br>3Ch = 3200<br>3Dh = 3400<br>3Eh = 3600<br>3Fh = 3800 |

Copyright © 2023 Texas Instruments Incorporated

**Table 7-17. CLOSED_LOOP3 Register Field Descriptions (continued)**

| Bit | Field | Type | Reset | Description |
|---|---|---|---|---|
| 4 | INTEG_ZC_METHOD | R/W | 0h | Commutation method select<br>0h = ZC based<br>1h = Integration based |
| 3-1 | DEGAUSS_MAX_WIN | R/W | 0h | Maximum degauss window<br>0h = 22.5°<br>1h = 10°<br>2h = 15°<br>3h = 18°<br>4h = 30°<br>5h = 37.5°<br>6h = 45°<br>7h = 60° |
| 0 | DYN_DEGAUSS_EN | R/W | 0h | Dynamic degauss detection<br>0h = Disable<br>1h = Enable |


Copyright © 2023 Texas Instruments Incorporated

#### 7.7.1.7 CLOSED_LOOP4 Register (Offset = 8Ch) [Reset = 00000000h]

CLOSED_LOOP4 is shown in Figure 7-62 and described in Table 7-18.

Return to the Summary Table.

Register to configure close loop settings4

**Figure 7-62. CLOSED_LOOP4 Register**

| 31 | 30 | 29 | 28 | 27 | 26 | 25 | 24 |
|---|---|---|---|---|---|---|---|
| PARITY | RESERVED | | | | | | |
| R/W-0h | R/W-0h | | | | | | |
| **23** | **22** | **21** | **20** | **19** | **18** | **17** | **16** |
| RESERVED | | | | WCOMP_BLANK_EN | FAST_DEC_DUTY_WIN | | |
| R/W-0h | | | | R/W-0h | R/W-0h | | |
| **15** | **14** | **13** | **12** | **11** | **10** | **9** | **8** |
| FAST_DEC_DUTY_THR | | | DYN_BRK_CURR_LOW_LIM | | | | DYNAMIC_BRK_CURR |
| R/W-0h | | | R/W-0h | | | | R/W-0h |
| **7** | **6** | **5** | **4** | **3** | **2** | **1** | **0** |
| FAST_DECEL_EN | FAST_DECEL_CURR_LIM | | | | FAST_BRK_DELTA | | |
| R/W-0h | R/W-0h | | | | R/W-0h | | |

**Table 7-18. CLOSED_LOOP4 Register Field Descriptions**

| Bit | Field | Type | Reset | Description |
|---|---|---|---|---|
| 31 | PARITY | R/W | 0h | Parity bit |
| 30-20 | RESERVED | R/W | 0h | Reserved |
| 19 | WCOMP_BLANK_EN | R/W | 0h | Enable WCOMP blanking during fast deceleration<br>0h = Disable<br>1h = Enable |
| 18-16 | FAST_DEC_DUTY_WIN | R/W | 0h | Fast deceleration duty window<br>0h = 0 %<br>1h = 2.5 %<br>2h = 5 %<br>3h = 7.5 %<br>4h = 10 %<br>5h = 15 %<br>6h = 20 %<br>7h = 25 % |
| 15-13 | FAST_DEC_DUTY_THR | R/W | 0h | Fast deceleration duty threshold<br>0h = 100 %<br>1h = 95 %<br>2h = 90 %<br>3h = 85 %<br>4h = 80 %<br>5h = 75 %<br>6h = 70%<br>7h = 65 % |

Copyright © 2023 Texas Instruments Incorporated

**Table 7-18. CLOSED_LOOP4 Register Field Descriptions (continued)**

| Bit | Field | Type | Reset | Description |
|---|---|---|---|---|
| 12-9 | DYN_BRK_CURR_LOW_LIM | R/W | 0h | Fast deceleration dynamic current limit lower threshold (Deceleration current lower threshold (A) = DYN_BRK_CURR_LOW_LIM / CSA_GAIN)<br>0h = Reserved<br>1h = 0.1V<br>2h = 0.2 V<br>3h = 0.3 V<br>4h = 0.4 V<br>5h = 0.5 V<br>6h = 0.6 V<br>7h = 0.7 V<br>8h = 0.8 V<br>9h = 0.9 V<br>Ah = 1 V<br>Bh = 1.1 V<br>Ch = 1.2 V<br>Dh = 1.3 V<br>Eh = 1.4 V<br>Fh = 1.5 V |
| 8 | DYNAMIC_BRK_CURR | R/W | 0h | Enable dynamic decrease in current limit during fast deceleration<br>0h = Disable<br>1h = Enable |
| 7 | FAST_DECEL_EN | R/W | 0h | Fast deceleration enable<br>0h = Disable<br>1h = Enable |
| 6-3 | FAST_DECEL_CURR_LIM | R/W | 0h | Deceleration current threshold (Fast Deceleration current limit upper threshold (A) = FAST_DECEL_CURR_LIM / CSA_GAIN)<br>0h = Reserved<br>1h = 0.1V<br>2h = 0.2 V<br>3h = 0.3 V<br>4h = 0.4 V<br>5h = 0.5 V<br>6h = 0.6 V<br>7h = 0.7 V<br>8h = 0.8 V<br>9h = 0.9 V<br>Ah = 1 V<br>Bh = 1.1 V<br>Ch = 1.2 V<br>Dh = 1.3 V<br>Eh = 1.4 V<br>Fh = 1.5 V |
| 2-0 | FAST_BRK_DELTA | R/W | 0h | Fast deceleration exit speed delta<br>0h = 0.5 %<br>1h = 1 %<br>2h = 1.5 %<br>3h = 2 %<br>4h = 2.5 %<br>5h = 3 %<br>6h = 4 %<br>7h = 5 % |


Copyright © 2023 Texas Instruments Incorporated

#### 7.7.1.8 CONST_SPEED Register (Offset = 8Eh) [Reset = 00000000h]

CONST_SPEED is shown in Figure 7-63 and described in Table 7-19.

Return to the Summary Table.

Register to configure Constant speed mode settings

**Figure 7-63. CONST_SPEED Register**

| 31 | 30 | 29 | 28 | 27 | 26 | 25 | 24 |
|---|---|---|---|---|---|---|---|
| PARITY | RESERVED | SPD_POWER_KP | | | | | |
| R/W-0h | R/W-0h | R/W-0h | | | | | |
| **23** | **22** | **21** | **20** | **19** | **18** | **17** | **16** |
| SPD_POWER_KP | | | | SPD_POWER_KI | | | |
| R/W-0h | | | | R/W-0h | | | |
| **15** | **14** | **13** | **12** | **11** | **10** | **9** | **8** |
| SPD_POWER_KI | | | | | | | |
| R/W-0h | | | | | | | |
| **7** | **6** | **5** | **4** | **3** | **2** | **1** | **0** |
| SPD_POWER_V_MAX | | | SPD_POWER_V_MIN | | | CLOSED_LOOP_MODE | |
| R/W-0h | | | R/W-0h | | | R/W-0h | |

**Table 7-19. CONST_SPEED Register Field Descriptions**

| Bit | Field | Type | Reset | Description |
|---|---|---|---|---|
| 31 | PARITY | R/W | 0h | Parity bit |
| 30 | RESERVED | R/W | 0h | Reserved |
| 29-20 | SPD_POWER_KP | R/W | 0h | Speed/ Power loop Kp (Kp = SPD_LOOP_KP / 10000) |
| 19-8 | SPD_POWER_KI | R/W | 0h | Speed/ Power loop Ki (Ki = SPD_LOOP_KI / 1000000) |
| 7-5 | SPD_POWER_V_MAX | R/W | 0h | Upper saturation limit for speed/ power loop<br>0h = 100 %<br>1h = 95 %<br>2h = 90 %<br>3h = 85 %<br>4h = 80 %<br>5h = 75 %<br>6h = 70%<br>7h = 65 % |
| 4-2 | SPD_POWER_V_MIN | R/W | 0h | Lower saturation limit for speed/power loop<br>0h = 0 %<br>1h = 2.5 %<br>2h = 5 %<br>3h = 7.5 %<br>4h = 10 %<br>5h = 15 %<br>6h = 20 %<br>7h = 25 % |
| 1-0 | CLOSED_LOOP_MODE | R/W | 0h | Closed loop mode<br>0h = Disabled<br>1h = Speed Loop<br>2h = Power Loop<br>3h = Reserved |

Copyright © 2023 Texas Instruments Incorporated

#### 7.7.1.9 CONST_PWR Register (Offset = 90h) [Reset = 00000000h]

CONST_PWR is shown in Figure 7-64 and described in Table 7-20.

Return to the Summary Table.

Register to configure Constant power mode settings

**Figure 7-64. CONST_PWR Register**

| 31 | 30 | 29 | 28 | 27 | 26 | 25 | 24 |
|---|---|---|---|---|---|---|---|
| PARITY | MAX_SPEED | | | | | | |
| R/W-0h | R/W-0h | | | | | | |
| 23 | 22 | 21 | 20 | 19 | 18 | 17 | 16 |
| MAX_SPEED | | | | | | | |
| R/W-0h | | | | | | | |
| 15 | 14 | 13 | 12 | 11 | 10 | 9 | 8 |
| MAX_SPEED | DEADTIME_COMP_EN | MAX_POWER | | | | | |
| R/W-0h | R/W-0h | R/W-0h | | | | | |
| 7 | 6 | 5 | 4 | 3 | 2 | 1 | 0 |
| MAX_POWER | | | | CONST_POWER_LIMIT_HYST | | CONST_POWER_MODE | |
| R/W-0h | | | | R/W-0h | | R/W-0h | |

**Table 7-20. CONST_PWR Register Field Descriptions**

| Bit | Field | Type | Reset | Description |
|---|---|---|---|---|
| 31 | PARITY | R/W | 0h | Parity bit |
| 30-15 | MAX_SPEED | R/W | 0h | Maximum Speed (Maximum Speed (Hz) = MAX_SPEED / 16) |
| 14 | DEADTIME_COMP_EN | R/W | 0h | Enable dead time compensation<br>0h = Disable<br>1h = Enable |
| 13-4 | MAX_POWER | R/W | 0h | Maximum power (Maximum power (W) = MAX_POWER / 4) |
| 3-2 | CONST_POWER_LIMIT_HYST | R/W | 0h | Hysteresis for input power regulation<br>0h = 5 %<br>1h = 7.5 %<br>2h = 10 %<br>3h = 12.5 % |
| 1-0 | CONST_POWER_MODE | R/W | 0h | Input power regulation mode<br>0h = Disabled<br>1h = Closed Loop Power Control<br>2h = Power Limit Control<br>3h = Reserved |


Copyright © 2023 Texas Instruments Incorporated

#### 7.7.1.10 150_DEG_TWO_PH_PROFILE Register (Offset = 96h) [Reset = 00000000h]

150_DEG_TWO_PH_PROFILE is shown in Figure 7-65 and described in Table 7-21.

Return to the Summary Table.

Register to configure 150 degree modulation TWO phase duty

**Figure 7-65. 150_DEG_TWO_PH_PROFILE Register**

| 31 | 30 | 29 | 28 | 27 | 26 | 25 | 24 |
|---|---|---|---|---|---|---|---|
| PARITY | TWOPH_STEP0 | | | TWOPH_STEP1 | | | TWOPH_STEP 2 |
| R/W-0h | R/W-0h | | | R/W-0h | | | R/W-0h |
| **23** | **22** | **21** | **20** | **19** | **18** | **17** | **16** |
| TWOPH_STEP2 | | TWOPH_STEP3 | | | TWOPH_STEP4 | | |
| R/W-0h | | R/W-0h | | | R/W-0h | | |
| **15** | **14** | **13** | **12** | **11** | **10** | **9** | **8** |
| TWOPH_STEP5 | | | TWOPH_STEP6 | | | TWOPH_STEP7 | |
| R/W-0h | | | R/W-0h | | | R/W-0h | |
| **7** | **6** | **5** | **4** | **3** | **2** | **1** | **0** |
| TWOPH_STEP 7 | RESERVED | | | | | | |
| R/W-0h | R/W-0h | | | | | | |

**Table 7-21. 150_DEG_TWO_PH_PROFILE Register Field Descriptions**

| Bit | Field | Type | Reset | Description |
|---|---|---|---|---|
| 31 | PARITY | R/W | 0h | Parity bit |
| 30-28 | TWOPH_STEP0 | R/W | 0h | 150° modulation , Two ph - step duty - 0<br>0h = 0%<br>1h = 50 %<br>2h = 75 %<br>3h = 83.75 %<br>4h = 87.5 %<br>5h = 93.75 %<br>6h = 97.5 %<br>7h = 99 % |
| 27-25 | TWOPH_STEP1 | R/W | 0h | 150° modulation , Two ph - step duty - 1<br>0h = 0%<br>1h = 50 %<br>2h = 75 %<br>3h = 83.75 %<br>4h = 87.5 %<br>5h = 93.75 %<br>6h = 97.5 %<br>7h = 99 % |
| 24-22 | TWOPH_STEP2 | R/W | 0h | 150° modulation, Two ph - step duty - 2<br>0h = 0%<br>1h = 50 %<br>2h = 75 %<br>3h = 83.75 %<br>4h = 87.5 %<br>5h = 93.75 %<br>6h = 97.5 %<br>7h = 99 % |

Copyright © 2023 Texas Instruments Incorporated

**Table 7-21. 150_DEG_TWO_PH_PROFILE Register Field Descriptions (continued)**

| Bit | Field | Type | Reset | Description |
|---|---|---|---|---|
| 21-19 | TWOPH_STEP3 | R/W | 0h | 150° modulation, Two ph - step duty - 3<br>0h = 0%<br>1h = 50 %<br>2h = 75 %<br>3h = 83.75 %<br>4h = 87.5 %<br>5h = 93.75 %<br>6h = 97.5 %<br>7h = 99 % |
| 18-16 | TWOPH_STEP4 | R/W | 0h | 150° modulation, Two ph - step duty - 4<br>0h = 0%<br>1h = 50 %<br>2h = 75 %<br>3h = 83.75 %<br>4h = 87.5 %<br>5h = 93.75 %<br>6h = 97.5 %<br>7h = 99 % |
| 15-13 | TWOPH_STEP5 | R/W | 0h | 150° modulation, Two ph - step duty - 5<br>0h = 0%<br>1h = 50 %<br>2h = 75 %<br>3h = 83.75 %<br>4h = 87.5 %<br>5h = 93.75 %<br>6h = 97.5 %<br>7h = 99 % |
| 12-10 | TWOPH_STEP6 | R/W | 0h | 150° modulation, Two ph - step duty - 6<br>0h = 0%<br>1h = 50 %<br>2h = 75 %<br>3h = 83.75 %<br>4h = 87.5 %<br>5h = 93.75 %<br>6h = 97.5 %<br>7h = 99 % |
| 9-7 | TWOPH_STEP7 | R/W | 0h | 150° modulation, Two ph - step duty - 7<br>0h = 0%<br>1h = 50 %<br>2h = 75 %<br>3h = 83.75 %<br>4h = 87.5 %<br>5h = 93.75 %<br>6h = 97.5 %<br>7h = 99 % |
| 6-0 | RESERVED | R/W | 0h | reserved bits for algo parameter update |


Copyright © 2023 Texas Instruments Incorporated

#### 7.7.1.11 150_DEG_THREE_PH_PROFILE Register (Offset = 98h) [Reset = 00000000h]

150_DEG_THREE_PH_PROFILE is shown in Figure 7-66 and described in Table 7-22.

Return to the Summary Table.

Register to configure 150 degree modulation Three phase duty

**Figure 7-66. 150_DEG_THREE_PH_PROFILE Register**

| 31 | 30 | 29 | 28 | 27 | 26 | 25 | 24 |
|---|---|---|---|---|---|---|---|
| PARITY | THREEPH_STEP0 | | | THREEPH_STEP1 | | | THREEPH_STEP2 |
| R/W-0h | R/W-0h | | | R/W-0h | | | R/W-0h |
| **23** | **22** | **21** | **20** | **19** | **18** | **17** | **16** |
| THREEPH_STEP2 | | THREEPH_STEP3 | | | THREEPH_STEP4 | | |
| R/W-0h | | R/W-0h | | | R/W-0h | | |
| **15** | **14** | **13** | **12** | **11** | **10** | **9** | **8** |
| THREEPH_STEP5 | | | THREEPH_STEP6 | | | THREEPH_STEP7 | |
| R/W-0h | | | R/W-0h | | | R/W-0h | |
| **7** | **6** | **5** | **4** | **3** | **2** | **1** | **0** |
| THREEPH_STEP7 | LEAD_ANGLE_150DEG_ADV | | RESERVED | | | | |
| R/W-0h | R/W-0h | | R/W-0h | | | | |

**Table 7-22. 150_DEG_THREE_PH_PROFILE Register Field Descriptions**

| Bit | Field | Type | Reset | Description |
|---|---|---|---|---|
| 31 | PARITY | R/W | 0h | Parity bit |
| 30-28 | THREEPH_STEP0 | R/W | 0h | 150° modulation, Three ph - step duty - 0<br>0h = 0%<br>1h = 50 %<br>2h = 75 %<br>3h = 83.75 %<br>4h = 87.5 %<br>5h = 93.75 %<br>6h = 97.5 %<br>7h = 99 % |
| 27-25 | THREEPH_STEP1 | R/W | 0h | 150° modulation, Three ph - step duty - 1<br>0h = 0%<br>1h = 50 %<br>2h = 75 %<br>3h = 83.75 %<br>4h = 87.5 %<br>5h = 93.75 %<br>6h = 97.5 %<br>7h = 99 % |
| 24-22 | THREEPH_STEP2 | R/W | 0h | 150° modulation, Three ph - step duty - 2<br>0h = 0%<br>1h = 50 %<br>2h = 75 %<br>3h = 83.75 %<br>4h = 87.5 %<br>5h = 93.75 %<br>6h = 97.5 %<br>7h = 99 % |

Copyright © 2023 Texas Instruments Incorporated

**Table 7-22. 150_DEG_THREE_PH_PROFILE Register Field Descriptions (continued)**

| Bit | Field | Type | Reset | Description |
|---|---|---|---|---|
| 21-19 | THREEPH_STEP3 | R/W | 0h | 150° modulation, Three ph - step duty - 3<br>0h = 0%<br>1h = 50 %<br>2h = 75 %<br>3h = 83.75 %<br>4h = 87.5 %<br>5h = 93.75 %<br>6h = 97.5 %<br>7h = 99 % |
| 18-16 | THREEPH_STEP4 | R/W | 0h | 150° modulation, Three ph - step duty - 4<br>0h = 0.0 %<br>1h = 0.5 %<br>2h = 0.75 %<br>3h = 0.8375 %<br>4h = 0.875 %<br>5h = 0.9375 %<br>6h = 0.975 %<br>7h = 0.99 % |
| 15-13 | THREEPH_STEP5 | R/W | 0h | 150° modulation, Three ph - step duty - 5<br>0h = 0%<br>1h = 50 %<br>2h = 75 %<br>3h = 83.75 %<br>4h = 87.5 %<br>5h = 93.75 %<br>6h = 97.5 %<br>7h = 99 % |
| 12-10 | THREEPH_STEP6 | R/W | 0h | 150° modulation, Three ph - step duty - 6<br>0h = 0%<br>1h = 50 %<br>2h = 75 %<br>3h = 83.75 %<br>4h = 87.5 %<br>5h = 93.75 %<br>6h = 97.5 %<br>7h = 99 % |
| 9-7 | THREEPH_STEP7 | R/W | 0h | 150° modulation, Three ph - step duty - 7<br>0h = 0%<br>1h = 50 %<br>2h = 75 %<br>3h = 83.75 %<br>4h = 87.5 %<br>5h = 93.75 %<br>6h = 97.5 %<br>7h = 99 % |
| 6-5 | LEAD_ANGLE_150DEG_ADV | R/W | 0h | Angle advance for 150° modulation<br>0h = 0°<br>1h = 5°<br>2h = 10°<br>3h = 15° |
| 4-0 | RESERVED | R/W | 0h | Reserved |


Copyright © 2023 Texas Instruments Incorporated

### 7.7.1.12 TRAP_CONFIG1 Register (Offset = 9Ah) [Reset = 00000000h]

TRAP_CONFIG1 is shown in Figure 7-67 and described in Table 7-23.

Return to the Summary Table.

Register to configure internal Algorithm Variables

**Figure 7-67. TRAP_CONFIG1 Register**

| 31 | 30 | 29 | 28 | 27 | 26 | 25 | 24 |
|---|---|---|---|---|---|---|---|
| PARITY | RESERVED | | | RESERVED | | RESERVED | |
| R/W-0h | R/W-0h | | | R/W-0h | | R/W-0h | |
| **23** | **22** | **21** | **20** | **19** | **18** | **17** | **16** |
| OL_HANDOFF_CYCLES | | RESERVED | | | AVS_NEG_CURR_LIMIT | | |
| R/W-0h | | R/W-0h | | | R/W-0h | | |
| **15** | **14** | **13** | **12** | **11** | **10** | **9** | **8** |
| AVS_LIMIT_HYST | ISD_BEMF_THR | | | | | ISD_CYCLE_THR | |
| R/W-0h | R/W-0h | | | | | R/W-0h | |
| **7** | **6** | **5** | **4** | **3** | **2** | **1** | **0** |
| ISD_CYCLE_THR | RESERVED | RESERVED | | ZC_ANGLE_OL_THR | | FAST_STARTUP_DIV_FACTOR | |
| R/W-0h | R/W-0h | R/W-0h | | R/W-0h | | R/W-0h | |

**Table 7-23. TRAP_CONFIG1 Register Field Descriptions**

| Bit | Field | Type | Reset | Description |
|---|---|---|---|---|
| 31 | PARITY | R/W | 0h | Parity bit |
| 30-29 | RESERVED | R/W | 0h | Reserved |
| 28-26 | RESERVED | R/W | 0h | Reserved |
| 25-24 | RESERVED | R/W | 0h | Reserved |
| 23-22 | OL_HANDOFF_CYCLES | R/W | 0h | Open loop handoff cycles<br>0h = 3<br>1h = 6<br>2h = 12<br>3h = 24 |
| 21-19 | RESERVED | R/W | 0h | Reserved |
| 18-16 | AVS_NEG_CURR_LIMIT | R/W | 0h | AVS negative current limit (AVS negative current limit (A) = (AVS_NEG_CURRENT_LIMIT * 3 /4095) / CSA_GAIN)<br>0h = 0<br>1h = -40<br>2h = -30<br>3h = -20<br>4h = -10<br>5h = 10<br>6h = 20<br>7h = 30 |
| 15 | AVS_LIMIT_HYST | R/W | 0h | AVS current hysteresis (AVS positive current limit (A) = ((AVS_LIMIT_HYST + AVS_NEG_CURR_LIMIT) * 3 /4095) / CSA_GAIN)<br>0h = 20<br>1h = 10 |

Copyright © 2023 Texas Instruments Incorporated

**Table 7-23. TRAP_CONFIG1 Register Field Descriptions (continued)**

| Bit | Field | Type | Reset | Description |
|---|---|---|---|---|
| 14-10 | ISD_BEMF_THR | R/W | 0h | ISD BEMF threshold (ISD BEMF threshold = 200 * ISD_BEMF_THR)<br>0h = 0<br>1h = 200<br>2h = 400<br>3h = 600<br>4h = 800<br>5h = 1000<br>6h = 1200<br>7h = 1400<br>8h = 1600<br>9h = 1800<br>Ah = 2000<br>Bh = 2200<br>Ch = 2400<br>Dh = 2600<br>Eh = 2800<br>Fh = 3000<br>10h = 3200<br>11h = 3400<br>12h = 3600<br>13h = 3800<br>14h = 4000<br>15h = 4200<br>16h = 4400<br>17h = 4600<br>18h = 4800<br>19h = 5000<br>1Ah = 5200<br>1Bh = 5400<br>1Ch = 5600<br>1Dh = 5800<br>1Eh = 6000<br>1Fh = 6200 |
| 9-7 | ISD_CYCLE_THR | R/W | 0h | ISD cycle threshold<br>0h = 2,<br>1h = 5,<br>2h = 8,<br>3h = 11,<br>4h = 14,<br>5h = 17,<br>6h = 20,<br>7h = 23 |
| 6 | RESERVED | R/W | 0h | Reserved |
| 5-4 | RESERVED | R/W | 0h | Reserved |
| 3-2 | ZC_ANGLE_OL_THR | R/W | 0h | Angle above which the ZC detection is done during OL<br>0h = 5°<br>1h = 8°<br>2h = 12°<br>3h = 15° |
| 1-0 | FAST_STARTUP_DIV_FACTOR | R/W | 0h | Dynamic A1, A2 change rate<br>0h = 1<br>1h = 2<br>2h = 4<br>3h = 8 |


Copyright © 2023 Texas Instruments Incorporated

#### 7.7.1.13 TRAP_CONFIG2 Register (Offset = 9Ch) [Reset = 00200000h]

TRAP_CONFIG2 is shown in Figure 7-68 and described in Table 7-24.

Return to the Summary Table.

Register to configure internal Algorithm Variables

**Figure 7-68. TRAP_CONFIG2 Register**

| 31 | 30 | 29 | 28 | 27 | 26 | 25 | 24 |
|---|---|---|---|---|---|---|---|
| PARITY | TBLANK | | | | TPWDTH | | |
| R/W-0h | R/W-0h | | | | R/W-0h | | |
| **23** | **22** | **21** | **20** | **19** | **18** | **17** | **16** |
| RESERVED | DGS_HIGH_IND_EN | RESERVED | ALIGN_DUTY | | | ZERO_DUTY_HYST | |
| R/W-0h | R/W-0h | R/W-1h | R/W-0h | | | R/W-0h | |
| **15** | **14** | **13** | **12** | **11** | **10** | **9** | **8** |
| RESERVED | | | | | | | |
| R/W-0h | | | | | | | |
| **7** | **6** | **5** | **4** | **3** | **2** | **1** | **0** |
| RESERVED | | | | | | | |
| R/W-0h | | | | | | | |

**Table 7-24. TRAP_CONFIG2 Register Field Descriptions**

| Bit | Field | Type | Reset | Description |
|---|---|---|---|---|
| 31 | PARITY | R/W | 0h | Parity bit |
| 30-27 | TBLANK | R/W | 0h | Blanking time after PWM edge<br>0h = 0 µs<br>1h = 1 µs<br>2h = 2 µs<br>3h = 3 µs<br>4h = 4 µs<br>5h = 5 µs<br>6h = 6 µs<br>7h = 7 µs<br>8h = 8 µs<br>9h = 9 µs<br>Ah = 10 µs<br>Bh = 11 µs<br>Ch = 12 µs<br>Dh = 13 µs<br>Eh = 14 µs<br>Fh = 15 µs |
| 26-24 | TPWDTH | R/W | 0h | Comparator deglitch time<br>0h = 0 µs<br>1h = 1 µs<br>2h = 2 µs<br>3h = 3 µs<br>4h = 4 µs<br>5h = 5 µs<br>6h = 6 µs<br>7h = 7 µs |
| 23 | RESERVED | R/W | 0h | Reserved |
| 22 | DGS_HIGH_IND_EN | R/W | 0h | Degauss Filter for High Inductance Enable<br>0h = Disable<br>1h = Enable |
| 21 | RESERVED | R/W | 1h | Reserved |

Copyright © 2023 Texas Instruments Incorporated

**Table 7-24. TRAP_CONFIG2 Register Field Descriptions (continued)**

| Bit | Field | Type | Reset | Description |
|---|---|---|---|---|
| 20-18 | ALIGN_DUTY | R/W | 0h | Duty cycle limit during align<br>0h = 10 %<br>1h = 15 %<br>2h = 20 %<br>3h = 25 %<br>4h = 30 %<br>5h = 40 %<br>6h = 50 %<br>7h = 100 % |
| 17-16 | ZERO_DUTY_HYST | R/W | 0h | Duty cycle hysteresis to exit standby<br>0h = 0 %<br>1h = 1 %<br>2h = 2 %<br>3h = 3 % |
| 15-0 | RESERVED | R/W | 0h | Reserved |

### 7.7.2 Fault_Configuration Registers

Table 7-25 lists the memory-mapped registers for the Fault_Configuration registers. All register offset addresses not listed in Table 7-25 should be considered as reserved locations and the register contents should not be modified.

**Table 7-25. FAULT_CONFIGURATION Registers**

| Offset | Acronym | Register Name | Section |
|---|---|---|---|
| 92h | FAULT_CONFIG1 | Fault configuration 1 | FAULT_CONFIG1 Register (Offset = 92h) [Reset = 00000000h] |
| 94h | FAULT_CONFIG2 | Fault configuration 2 | FAULT_CONFIG2 Register (Offset = 94h) [Reset = 00000000h] |

Complex bit access types are encoded to fit into small table cells. Table 7-26 shows the codes that are used for access types in this section.

**Table 7-26. Fault_Configuration Access Type Codes**

| Access Type | Code | Description |
|---|---|---|
| **Read Type** | | |
| R | R | Read |
| **Write Type** | | |
| W | W | Write |
| **Reset or Default Value** | | |
| *-n* | | Value after reset or the default value |


Copyright © 2023 Texas Instruments Incorporated

#### 7.7.2.1 FAULT_CONFIG1 Register (Offset = 92h) [Reset = 00000000h]

FAULT_CONFIG1 is shown in Figure 7-69 and described in Table 7-27.

Return to the Summary Table.

Register to configure fault settings1

**Figure 7-69. FAULT_CONFIG1 Register**

| 31 | 30 | 29 | 28 | 27 | 26 | 25 | 24 |
|---|---|---|---|---|---|---|---|
| PARITY | RESERVED | NO_MTR_DEG_TIME | | | CBC_ILIMIT_MODE | | |
| R/W-0h | R/W-0h | R/W-0h | | | R/W-0h | | |
| **23** | **22** | **21** | **20** | **19** | **18** | **17** | **16** |
| CBC_ILIMIT_MODE | LOCK_ILIMIT | | | | LOCK_ILIMIT_MODE | | |
| R/W-0h | R/W-0h | | | | R/W-0h | | |
| **15** | **14** | **13** | **12** | **11** | **10** | **9** | **8** |
| LOCK_ILIMIT_MODE | LOCK_ILIMIT_DEG | | | | CBC_RETRY_PWM_CYC | | |
| R/W-0h | R/W-0h | | | | R/W-0h | | |
| **7** | **6** | **5** | **4** | **3** | **2** | **1** | **0** |
| RESERVED | MTR_LCK_MODE | | | | LCK_RETRY | | |
| R/W-0h | R/W-0h | | | | R/W-0h | | |

**Table 7-27. FAULT_CONFIG1 Register Field Descriptions**

| Bit | Field | Type | Reset | Description |
|---|---|---|---|---|
| 31 | PARITY | R/W | 0h | Parity bit |
| 30 | RESERVED | R/W | 0h | Reserved |
| 29-27 | NO_MTR_DEG_TIME | R/W | 0h | No motor detect deglitch time<br>0h = 1 ms<br>1h = 10 ms<br>2h = 25 ms<br>3h = 50 ms<br>4h = 100 ms<br>5h = 250 ms<br>6h = 500 ms<br>7h = 1000 ms |

Copyright © 2023 Texas Instruments Incorporated

**Table 7-27. FAULT_CONFIG1 Register Field Descriptions (continued)**

| Bit | Field | Type | Reset | Description |
|---|---|---|---|---|
| 26-23 | CBC_ILIMIT_MODE | R/W | 0h | Cycle by cycle current limit<br>0h = Automatic recovery next PWM cycle; nFAULT active; driver is in recirculation mode<br>1h = Automatic recovery next PWM cycle; nFAULT inactive; driver is in recirculation mode<br>2h = Automatic recovery if VSOX < CBC_ILIMIT; nFAULT active; driver is in recirculation mode (Only available with high-side modulation)<br>3h = Automatic recovery if VSOX < CBC_ILIMIT; nFAULT inactive; driver is in recirculation mode (Only available with high-side modulation)<br>4h = Automatic recovery after CBC_RETRY_PWM_CYC; nFAULT active; driver is in recirculation mode<br>5h = Automatic recovery after CBC_RETRY_PWM_CYC; nFAULT inactive; driver is in recirculation mode<br>6h = VSOX > CBC_ILIMIT is report only but no action is taken<br>7h = Cycle by Cycle limit is disabled<br>8h = Cycle by Cycle limit is disabled<br>9h = Cycle by Cycle limit is disabled<br>Ah = Cycle by Cycle limit is disabled<br>Bh = Cycle by Cycle limit is disabled<br>Ch = Cycle by Cycle limit is disabled<br>Dh = Cycle by Cycle limit is disabled<br>Eh = Cycle by Cycle limit is disabled<br>Fh = Cycle by Cycle limit is disabled |
| 22-19 | LOCK_ILIMIT | R/W | 0h | Lock detection current limit (Lock detection current limit (A) = LOCK_ILIMIT / CSA_GAIN)<br>0h = Reserved<br>1h = 0.1 V<br>2h = 0.2 V<br>3h = 0.3 V<br>4h = 0.4 V<br>5h = 0.5 V<br>6h = 0.6 V<br>7h = 0.7 V<br>8h = 0.8 V<br>9h = 0.9 V<br>Ah = 1 V<br>Bh = 1.1 V<br>Ch = 1.2 V<br>Dh = 1.3 V<br>Eh = 1.4 V<br>Fh = 1.5 V |


Copyright © 2023 Texas Instruments Incorporated

**Table 7-27. FAULT_CONFIG1 Register Field Descriptions (continued)**

| Bit | Field | Type | Reset | Description |
|---|---|---|---|---|
| 18-15 | LOCK_ILIMIT_MODE | R/W | 0h | Lock detection current limit mode<br>0h = Ilimit lock detection causes latched fault; nFAULT active; Gate driver is tristated<br>1h = Ilimit lock detection causes latched fault; nFAULT active; Gate driver is in recirculation mode<br>2h = Ilimit lock detection causes latched fault; nFAULT active; Gate driver is in high-side brake mode (All high-side FETs are turned ON)<br>3h = Ilimit lock detection causes latched fault; nFAULT active; Gate driver is in low-side brake mode (All low-side FETs are turned ON)<br>4h = Automatic recovery after tLCK_RETRY; Gate driver is tristated<br>5h = Automatic recovery after tLCK_RETRY; Gate driver is in recirculation mode<br>6h = Automatic recovery after tLCK_RETRY; Gate driver is in high-side brake mode (All high-side FETs are turned ON)<br>7h = Automatic recovery after tLCK_RETRY; Gate driver is in low-side brake mode (All low-side FETs are turned ON)<br>8h = Ilimit lock detection is in report only but no action is taken<br>9h = Ilimit lock detection is disabled<br>Ah = Ilimit lock detection is disabled<br>Bh = Ilimit lock detection is disabled<br>Ch = Ilimit lock detection is disabled<br>Dh = Ilimit lock detection is disabled<br>Eh = Ilimit lock detection is disabled<br>Fh = Ilimit lock detection is disabled |
| 14-11 | LOCK_ILIMIT_DEG | R/W | 0h | Lock detection current limit deglitch time<br>0h = 1 ms<br>1h = 2 ms<br>2h = 5 ms<br>3h = 10 ms<br>4h = 25 ms<br>5h = 50 ms<br>6h = 75 ms<br>7h = 100 ms<br>8h = 250 ms<br>9h = 500 ms<br>Ah = 1 s<br>Bh = 2.5 s<br>Ch = 5 s<br>Dh = 10 s<br>Eh = 25 s<br>Fh = 50 s |
| 10-8 | CBC_RETRY_PWM_CYC | R/W | 0h | Number of PWM cycles for CBC current limit to retry<br>0h = 0<br>1h = 1<br>2h = 2<br>3h = 3<br>4h = 4<br>5h = 5<br>6h = 6<br>7h = 7 |
| 7 | RESERVED | R/W | 0h | Reserved |

**Table 7-27. FAULT_CONFIG1 Register Field Descriptions (continued)**

| Bit | Field | Type | Reset | Description |
|---|---|---|---|---|
| 6-3 | MTR_LCK_MODE | R/W | 0h | Motor lock mode<br>0h = Motor lock detection causes latched fault; nFAULT active; Gate driver is tristated<br>1h = Motor lock detection causes latched fault; nFAULT active; Gate driver is in recirculation mode<br>2h = Motor lock detection causes latched fault; nFAULT active; Gate driver is in high-side brake mode (All high-side FETs are turned ON)<br>3h = Motor lock detection causes latched fault; nFAULT active; Gate driver is in low-side brake mode (All low-side FETs are turned ON)<br>4h = Automatic recovery after tLCK_RETRY; Gate driver is tristated<br>5h = Automatic recovery after tLCK_RETRY; Gate driver is in recirculation mode<br>6h = Automatic recovery after tLCK_RETRY; Gate driver is in high-side brake mode (All high-side FETs are turned ON)<br>7h = Automatic recovery after tLCK_RETRY; Gate driver is in low-side brake mode (All low-side FETs are turned ON)<br>8h = Motor lock detection is in report only but no action is taken<br>9h = Motor lock detection is disabled<br>Bh = Motor lock detection is disabled<br>Ch = Motor lock detection is disabled<br>Dh = Motor lock detection is disabled<br>Eh = Motor lock detection is disabled<br>Fh = Motor lock detection is disabled |
| 2-0 | LCK_RETRY | R/W | 0h | Lock retry time<br>0h = 100 ms<br>1h = 500 ms<br>2h = 1000 ms<br>3h = 2000 ms<br>4h = 3000 ms<br>5h = 5000 ms<br>6h = 7500 ms<br>7h = 10000 ms |


Copyright © 2023 Texas Instruments Incorporated

### 7.7.2.2 FAULT_CONFIG2 Register (Offset = 94h) [Reset = 00000000h]

FAULT_CONFIG2 is shown in Figure 7-70 and described in Table 7-28.

Return to the Summary Table.

Register to configure fault settings2

**Figure 7-70. FAULT_CONFIG2 Register**

| 31 | 30 | 29 | 28 | 27 | 26 | 25 | 24 |
|---|---|---|---|---|---|---|---|
| PARITY | LOCK1_EN | LOCK2_EN | LOCK3_EN | LOCK_ABN_SPEED | | | |
| R/W-0h | R/W-0h | R/W-0h | R/W-0h | R/W-0h | | | |
| **23** | **22** | **21** | **20** | **19** | **18** | **17** | **16** |
| LOSS_SYNC_TIMES | | | NO_MTR_THR | | | MAX_VM_MODE | MAX_VM_MOTOR |
| R/W-0h | | | R/W-0h | | | R/W-0h | R/W-0h |
| **15** | **14** | **13** | **12** | **11** | **10** | **9** | **8** |
| MAX_VM_MOTOR | | MIN_VM_MODE | MIN_VM_MOTOR | | | AUTO_RETRY_TIMES | |
| R/W-0h | | R/W-0h | R/W-0h | | | R/W-0h | |
| **7** | **6** | **5** | **4** | **3** | **2** | **1** | **0** |
| AUTO_RETRY_TIMES | LOCK_MIN_SPEED | | | ABN_LOCK_SPD_RATIO | | ZERO_DUTY_THR | |
| R/W-0h | R/W-0h | | | R/W-0h | | R/W-0h | |

**Table 7-28. FAULT_CONFIG2 Register Field Descriptions**

| Bit | Field | Type | Reset | Description |
|---|---|---|---|---|
| 31 | PARITY | R/W | 0h | Parity bit |
| 30 | LOCK1_EN | R/W | 0h | Lock 1 (Abnormal Speed) Enable<br>0h = Disable<br>1h = Enable |
| 29 | LOCK2_EN | R/W | 0h | Lock 2 (Loss of Sync) Enable<br>0h = Disable<br>1h = Enable |
| 28 | LOCK3_EN | R/W | 0h | Lock 3 (No Motor) Enable<br>0h = Disable<br>1h = Enable |
| 27-24 | LOCK_ABN_SPEED | R/W | 0h | Abnormal speed lock threshold<br>0h = 250 Hz<br>1h = 500 Hz<br>2h = 750 Hz<br>3h = 1000 Hz<br>4h = 1250 Hz<br>5h = 1500 Hz<br>6h = 1750 Hz<br>7h = 2000 Hz<br>8h = 2250 Hz<br>9h = 2500 Hz<br>Ah = 2750 Hz<br>Bh = 3000 Hz<br>Ch = 3250 Hz<br>Dh = 3500 Hz<br>Eh = 3750 Hz<br>Fh = 4000 Hz |

Copyright © 2023 Texas Instruments Incorporated

**Table 7-28. FAULT_CONFIG2 Register Field Descriptions (continued)**

| Bit | Field | Type | Reset | Description |
|---|---|---|---|---|
| 23-21 | LOSS_SYNC_TIMES | R/W | 0h | Number of times sync lost for loss of sync lock fault<br>0h = Trigger after losing sync 2 times<br>1h = Trigger after losing sync 3 times<br>2h = Trigger after losing sync 4 times<br>3h = Trigger after losing sync 5 times<br>4h = Trigger after losing sync 6 times<br>5h = Trigger after losing sync 7 times<br>6h = Trigger after losing sync 8 times<br>7h = Trigger after losing sync 9 times |
| 20-18 | NO_MTR_THR | R/W | 0h | No motor lock current threshold (No motor lock current threshold (A) = NO_MTR_THR / CSA_GAIN)<br>0h = 0.005 V<br>1h = 0.0075 V<br>2h = 0.010 V<br>3h = 0.0125 V<br>4h = 0.020 V<br>5h = 0.025 V<br>6h = 0.030 V<br>7h = 0.04 V |
| 17 | MAX_VM_MODE | R/W | 0h | 0h = Latch on Overvoltage<br>1h = Automatic clear if voltage in bounds |
| 16-14 | MAX_VM_MOTOR | R/W | 0h | Maximum voltage for running motor<br>0h = No Limit<br>1h = 20.0 V<br>2h = 25.0 V<br>3h = 30.0 V<br>4h = 35.0 V<br>5h = 40.0 V<br>6h = Unused<br>7h = Unused |
| 13 | MIN_VM_MODE | R/W | 0h | 0h = Latch on Undervoltage<br>1h = Automatic clear if voltage in bounds |
| 12-10 | MIN_VM_MOTOR | R/W | 0h | Minimum voltage for running motor<br>0h = No Limit<br>1h = 6.0 V<br>2h = 7.0 V<br>3h = 8.0 V<br>4h = 9.0 V<br>5h = 10.0 V<br>6h = 12.0 V<br>7h = 15.0 V |
| 9-7 | AUTO_RETRY_TIMES | R/W | 0h | Number of automatic retry attempts<br>0h = No Limit<br>1h = 2<br>2h = 3<br>3h = 5<br>4h = 7<br>5h = 10<br>6h = 15<br>7h = 20 |
| 6-4 | LOCK_MIN_SPEED | R/W | 0h | Speed below which lock fault is triggered<br>0h = 0.5 Hz<br>1h = 1 Hz<br>2h = 2 Hz<br>3h = 3 Hz<br>4h = 5 Hz<br>5h = 10 Hz<br>6h = 15 Hz<br>7h = 25 Hz |


Copyright © 2023 Texas Instruments Incorporated

**Table 7-28. FAULT_CONFIG2 Register Field Descriptions (continued)**

| Bit | Field | Type | Reset | Description |
|---|---|---|---|---|
| 3-2 | ABN_LOCK_SPD_RATIO | R/W | 0h | Ratio of electrical speed between two consecutive cycles above which abnormal speed lock fault is triggered<br>0h = 2<br>1h = 4<br>2h = 6<br>3h = 8 |
| 1-0 | ZERO_DUTY_THR | R/W | 0h | Duty cycle below which target speed is zero<br>0h = 1%<br>1h = 1.5%<br>2h = 2.0%<br>3h = 2.5% |

### 7.7.3 Hardware_Configuration Registers

Table 7-29 lists the memory-mapped registers for the Hardware_Configuration registers. All register offset addresses not listed in Table 7-29 should be considered as reserved locations and the register contents should not be modified.

**Table 7-29. HARDWARE_CONFIGURATION Registers**

| Offset | Acronym | Register Name | Section |
|---|---|---|---|
| A4h | PIN_CONFIG1 | Hardware pin configuration | PIN_CONFIG1 Register (Offset = A4h) [Reset = 00000000h] |
| A6h | PIN_CONFIG2 | Hardware pin configuration | PIN_CONFIG2 Register (Offset = A6h) [Reset = 00000000h] |
| A8h | DEVICE_CONFIG | Device configuration | DEVICE_CONFIG Register (Offset = A8h) [Reset = 00000000h] |

Complex bit access types are encoded to fit into small table cells. Table 7-30 shows the codes that are used for access types in this section.

**Table 7-30. Hardware_Configuration Access Type Codes**

| Access Type | Code | Description |
|---|---|---|
| **Read Type** | | |
| R | R | Read |
| **Write Type** | | |
| W | W | Write |
| **Reset or Default Value** | | |
| *-n* | | Value after reset or the default value |

#### 7.7.3.1 PIN_CONFIG1 Register (Offset = A4h) [Reset = 00000000h]

PIN_CONFIG1 is shown in Figure 7-71 and described in Table 7-31.

Return to the Summary Table.

Register to configure hardware pins

**Figure 7-71. PIN_CONFIG1 Register**

| 31 | 30 | 29 | 28 | 27 | 26 | 25 | 24 |
|---|---|---|---|---|---|---|---|
| PARITY | DACOUT1_VAR_ADDR | | | | | | |
| R/W-0h | R/W-0h | | | | | | |
| 23 | 22 | 21 | 20 | 19 | 18 | 17 | 16 |
| DACOUT1_VAR_ADDR | | | | | DACOUT2_VAR_ADDR | | |
| R/W-0h | | | | | R/W-0h | | |
| 15 | 14 | 13 | 12 | 11 | 10 | 9 | 8 |
| DACOUT2_VAR_ADDR | | | | | | | |
| R/W-0h | | | | | | | |
| 7 | 6 | 5 | 4 | 3 | 2 | 1 | 0 |
| DACOUT2_VAR_ADDR | BRAKE_INPUT | | DIR_INPUT | | SPD_CTRL_MODE | | ALARM_PIN_EN |
| R/W-0h | R/W-0h | | R/W-0h | | R/W-0h | | R/W-0h |

**Table 7-31. PIN_CONFIG1 Register Field Descriptions**

| Bit | Field | Type | Reset | Description |
|---|---|---|---|---|
| 31 | PARITY | R/W | 0h | Parity bit |
| 30-19 | DACOUT1_VAR_ADDR | R/W | 0h | 12-bit address of variable to be monitored |
| 18-7 | DACOUT2_VAR_ADDR | R/W | 0h | 12-bit address of variable to be monitored |
| 6-5 | BRAKE_INPUT | R/W | 0h | Brake input configuration<br>0h = Hardware Pin BRAKE<br>1h = Overwrite Hardware pin with Active Brake<br>2h = Overwrite Hardware pin with brake functionality disabled<br>3h = Reserved |
| 4-3 | DIR_INPUT | R/W | 0h | Direction input configuration<br>0h = Hardware Pin DIR<br>1h = Overwrite Hardware pin with clockwise rotation OUTA-OUTB-OUTC<br>3h = Reserved |
| 2-1 | SPD_CTRL_MODE | R/W | 0h | Speed input configuration<br>0h = Analog mode<br>1h = PWM mode<br>2h = 0x2<br>3h = Frequency mode |
| 0 | ALARM_PIN_EN | R/W | 0h | Alarm Pin GPIO configuration<br>0h = Disabled (Hi-Z)<br>1h = Enabled |


Copyright © 2023 Texas Instruments Incorporated

### 7.7.3.2 PIN_CONFIG2 Register (Offset = A6h) [Reset = 00000000h]

PIN_CONFIG2 is shown in Figure 7-72 and described in Table 7-32.

Return to the Summary Table.

Register to configure hardware pins

**Figure 7-72. PIN_CONFIG2 Register**

| 31 | 30 | 29 | 28 | 27 | 26 | 25 | 24 |
|---|---|---|---|---|---|---|---|
| PARITY | DAC_SOX_CONFIG | | RESERVED | DAC_CONFIG | I2C_TARGET_ADDR | | |
| R/W-0h | R/W-0h | | R/W-0h | R/W-0h | R/W-0h | | |
| **23** | **22** | **21** | **20** | **19** | **18** | **17** | **16** |
| I2C_TARGET_ADDR | | | | SLEEP_TIME | | EXT_WD_EN | EXT_WD_INPUT |
| R/W-0h | | | | R/W-0h | | R/W-0h | R/W-0h |
| **15** | **14** | **13** | **12** | **11** | **10** | **9** | **8** |
| EXT_WD_FAULT | EXT_WD_FREQ | | FG_PIN_FAULT_CONFIG | | RESERVED | | |
| R/W-0h | R/W-0h | | R/W-0h | | R/W-0h | | |
| **7** | **6** | **5** | **4** | **3** | **2** | **1** | **0** |
| RESERVED | | | | | | | |
| R/W-0h | | | | | | | |

**Table 7-32. PIN_CONFIG2 Register Field Descriptions**

| Bit | Field | Type | Reset | Description |
|---|---|---|---|---|
| 31 | PARITY | R/W | 0h | Parity bit |
| 30-29 | DAC_SOX_CONFIG | R/W | 0h | Pin 36 configuration<br>0h = DACOUT2<br>1h = SOA<br>2h = SOB<br>3h = SOC |
| 28 | RESERVED | R/W | 0h | Reserved |
| 27 | DAC_CONFIG | R/W | 0h | Pin 37 and pin 38 configuration<br>0h = Reserved<br>1h = Pin 37 as DACOUT2 and pin 38 as DACOUT1 |
| 26-20 | I2C_TARGET_ADDR | R/W | 0h | I2C target address |
| 19-18 | SLEEP_TIME | R/W | 0h | Sleep Time<br>0h = Check low for 50 µs<br>1h = Check low for 200 µs<br>2h = Check low for 20 ms<br>3h = Check low for 200 ms |
| 17 | EXT_WD_EN | R/W | 0h | Enable external watchdog<br>0h = Disable<br>1h = Enable |
| 16 | EXT_WD_INPUT | R/W | 0h | External watchdog source<br>0h = I2C<br>1h = GPIO |
| 15 | EXT_WD_FAULT | R/W | 0h | External watchdog fault mode<br>0h = Report only<br>1h = Latched fault with Hi-Z outputs |
| 14-13 | EXT_WD_FREQ | R/W | 0h | External watchdog frequency<br>0h = 10Hz<br>1h = 5Hz<br>2h = 2Hz<br>3h = 1Hz |

Copyright © 2023 Texas Instruments Incorporated

**Table 7-32. PIN_CONFIG2 Register Field Descriptions (continued)**

| Bit | Field | Type | Reset | Description |
|---|---|---|---|---|
| 12-11 | FG_PIN_FAULT_CONFIG | R/W | 0h | Fault on FG Pin Configuration<br>0h = FG continues to toggle till motor stops<br>1h = FG in Hi-Z state, pulled up externally<br>2h = FG pulled Low<br>3h = Reserved |
| 10-0 | RESERVED | R/W | 0h | Reserved |


Copyright © 2023 Texas Instruments Incorporated

### 7.7.3.3 DEVICE_CONFIG Register (Offset = A8h) [Reset = 00000000h]

DEVICE_CONFIG is shown in Figure 7-73 and described in Table 7-33.

Return to the Summary Table.

Register to configure device

**Figure 7-73. DEVICE_CONFIG Register**

| 31 | 30 | 29 | 28 | 27 | 26 | 25 | 24 |
|---|---|---|---|---|---|---|---|
| PARITY | INPUT_MAX_FREQUENCY | | | | | | |
| R/W-0h | R/W-0h | | | | | | |
| 23 | 22 | 21 | 20 | 19 | 18 | 17 | 16 |
| INPUT_MAX_FREQUENCY | | | | | | | |
| R/W-0h | | | | | | | |
| 15 | 14 | 13 | 12 | 11 | 10 | 9 | 8 |
| RESERVED | SSM_CONFIG | RESERVED | | DEV_MODE | SPD_PWM_RANGE_SELECT | CLK_SEL | |
| R/W-0h | R/W-0h | R/W-0h | | R/W-0h | R/W-0h | R/W-0h | |
| 7 | 6 | 5 | 4 | 3 | 2 | 1 | 0 |
| RESERVED | EXT_CLK_EN | EXT_CLK_CONFIG | | | RESERVED | | |
| R/W-0h | R/W-0h | R/W-0h | | | R/W-0h | | |

**Table 7-33. DEVICE_CONFIG Register Field Descriptions**

| Bit | Field | Type | Reset | Description |
|---|---|---|---|---|
| 31 | PARITY | R/W | 0h | Parity bit |
| 30-16 | INPUT_MAX_FREQUENCY | R/W | 0h | Maximum frequency (in Hz) for frequency based speed input |
| 15 | RESERVED | R/W | 0h | Reserved |
| 14 | SSM_CONFIG | R/W | 0h | SSM enable<br>0h = Enable<br>1h = Disable |
| 13-12 | RESERVED | R/W | 0h | Reserved |
| 11 | DEV_MODE | R/W | 0h | Device mode select<br>0h = Standby mode<br>1h = Sleep mode |
| 10 | SPD_PWM_RANGE_SELECT | R/W | 0h | PWM frequency range select<br>0h = 325 Hz to 100 kHz speed PWM input<br>1h = 10 Hz to 325 Hz speed PWM input |
| 9-8 | CLK_SEL | R/W | 0h | Clock source<br>0h = Internal Oscillator<br>1h = Reserved<br>2h = Reserved<br>3h = External Clock input |
| 7 | RESERVED | R/W | 0h | Reserved |
| 6 | EXT_CLK_EN | R/W | 0h | External clock enable<br>0h = Disable<br>1h = Enable |

Copyright © 2023 Texas Instruments Incorporated

**Table 7-33. DEVICE_CONFIG Register Field Descriptions (continued)**

| Bit | Field | Type | Reset | Description |
|---|---|---|---|---|
| 5-3 | EXT_CLK_CONFIG | R/W | 0h | External clock frequency<br>0h = 8 kHz<br>1h = 16 kHz<br>2h = 32 kHz<br>3h = 64 kHz<br>4h = 128 kHz<br>5h = 256 kHz<br>6h = 512 kHz<br>7h = 1024 kHz |
| 2-0 | RESERVED | R/W | 0h | Reserved |

### 7.7.4 Gate_Driver_Configuration Registers

Table 7-34 lists the memory-mapped registers for the Gate_Driver_Configuration registers. All register offset addresses not listed in Table 7-34 should be considered as reserved locations and the register contents should not be modified.

**Table 7-34. GATE_DRIVER_CONFIGURATION Registers**

| Offset | Acronym | Register Name | Section |
|---|---|---|---|
| ACh | GD_CONFIG1 | Gate driver configuration 1 | GD_CONFIG1 Register (Offset = ACh) [Reset = 00228000h] |
| AEh | GD_CONFIG2 | Gate driver configuration 2 | GD_CONFIG2 Register (Offset = AEh) [Reset = 01200000h] |

Complex bit access types are encoded to fit into small table cells. Table 7-35 shows the codes that are used for access types in this section.

**Table 7-35. Gate_Driver_Configuration Access Type Codes**

| Access Type | Code | Description |
|---|---|---|
| **Read Type** | | |
| R | R | Read |
| **Write Type** | | |
| W | W | Write |
| **Reset or Default Value** | | |
| *-n* | | Value after reset or the default value |


Copyright © 2023 Texas Instruments Incorporated

### 7.7.4.1 GD_CONFIG1 Register (Offset = ACh) [Reset = 00228000h]

GD_CONFIG1 is shown in Figure 7-74 and described in Table 7-36.

Return to the Summary Table.

Register to configure gated driver settings1

**Figure 7-74. GD_CONFIG1 Register**

| 31 | 30 | 29 | 28 | 27 | 26 | 25 | 24 |
|---|---|---|---|---|---|---|---|
| PARITY | RESERVED | | RESERVED | SLEW_RATE | | RESERVED | |
| R/W-0h | R/W-0h | | R/W-0h | R/W-0h | | R/W-0h | |
| **23** | **22** | **21** | **20** | **19** | **18** | **17** | **16** |
| CLR_FLT | RESERVED | RESERVED | RESERVED | OVP_SEL | OVP_EN | RESERVED | OTW_REP |
| R/W-0h | R/W-0h | R/W-1h | R/W-0h | R/W-0h | R/W-0h | R/W-1h | R/W-0h |
| **15** | **14** | **13** | **12** | **11** | **10** | **9** | **8** |
| RESERVED | RESERVED | OCP_DEG | | OCP_RETRY | OCP_LVL | OCP_MODE | |
| R/W-1h | R/W-0h | R/W-0h | | R/W-0h | R/W-0h | R/W-0h | |
| **7** | **6** | **5** | **4** | **3** | **2** | **1** | **0** |
| BEMF_THR | RESERVED | ADCOMP_TH_LS | ADCOMP_TH_HS | EN_ASR | EN_AAR | CSA_GAIN | |
| R/W-0h | R/W-0h | R/W-0h | R/W-0h | R/W-0h | R/W-0h | R/W-0h | |

**Table 7-36. GD_CONFIG1 Register Field Descriptions**

| Bit | Field | Type | Reset | Description |
|---|---|---|---|---|
| 31 | PARITY | R/W | 0h | Parity bit |
| 30-29 | RESERVED | R/W | 0h | Reserved |
| 28 | RESERVED | R/W | 0h | Reserved |
| 27-26 | SLEW_RATE | R/W | 0h | Slew rate<br>0h = 25 V/µs<br>1h = 50 V/µs<br>2h = 125 V/µs<br>3h = 200 V/µs |
| 25-24 | RESERVED | R/W | 0h | Reserved |
| 23 | CLR_FLT | R/W | 0h | Clear fault<br>0h = No clear fault command is issued<br>1h = To clear the latched fault bits. This bit automatically resets after being written. |
| 22 | RESERVED | R/W | 0h | Reserved |
| 21 | RESERVED | R/W | 1h | Reserved |
| 20 | RESERVED | R/W | 0h | Reserved |
| 19 | OVP_SEL | R/W | 0h | Overvoltage protection level<br>0h = VM overvoltage level is 34-V<br>1h = VM overvoltage level is 22-V |
| 18 | OVP_EN | R/W | 0h | Overvoltage protection enable<br>0h = Disable<br>1h = Enable |
| 17 | RESERVED | R/W | 1h | Reserved |
| 16 | OTW_REP | R/W | 0h | Overtemperature warning reporting on nFAULT<br>0h = Over temperature reporting on nFAULT is disabled<br>1h = Over temperature reporting on nFAULT is enabled |
| 15 | RESERVED | R/W | 1h | Reserved |
| 14 | RESERVED | R/W | 0h | Reserved |

Copyright © 2023 Texas Instruments Incorporated

**Table 7-36. GD_CONFIG1 Register Field Descriptions (continued)**

| Bit | Field | Type | Reset | Description |
|---|---|---|---|---|
| 13-12 | OCP_DEG | R/W | 0h | OCP deglitch time<br>0h = 0.2 µs<br>1h = 0.6 µs<br>2h = 1.2 µs<br>3h = 1.6 µs |
| 11 | OCP_RETRY | R/W | 0h | OCP retry time<br>0h = 5 ms<br>1h = 500 ms |
| 10 | OCP_LVL | R/W | 0h | OCP level<br>0h = 9 A (Typical)<br>1h = 13 A (Typical) |
| 9-8 | OCP_MODE | R/W | 0h | OCP fault mode<br>0h = Overcurrent causes a latched fault<br>1h = Overcurrent causes an automatic retrying fault<br>2h = Overcurrent is report only but no action is taken<br>3h = Overcurrent is not reported and no action is taken |
| 7 | BEMF_THR | R/W | 0h | BEMF comparator threshold<br>0h = BEMF comparator threshold is 20 mV<br>1h = BEMF comparator threshold is 100 mV |
| 6 | RESERVED | R/W | 0h | Reserved |
| 5 | ADCOMP_TH_LS | R/W | 0h | Active demag comparator threshold for low-side<br>0h = 100 mA<br>1h = 150 mA |
| 4 | ADCOMP_TH_HS | R/W | 0h | Active demag comparator threshold for high-side<br>0h = 100 mA<br>1h = 150 mA |
| 3 | EN_ASR | R/W | 0h | Active synchronous rectification enable<br>0h = Disable<br>1h = Enable |
| 2 | EN_AAR | R/W | 0h | Active asynchronous rectification enable<br>0h = Disable<br>1h = Enable |
| 1-0 | CSA_GAIN | R/W | 0h | Current Sense Amplifier (CSA) Gain<br>0h = 0.24 V/A<br>1h = 0.48 V/A<br>2h = 0.96 V/A<br>3h = 1.92 V/A |


Copyright © 2023 Texas Instruments Incorporated

### 7.7.4.2 GD_CONFIG2 Register (Offset = AEh) [Reset = 01200000h]

GD_CONFIG2 is shown in Figure 7-75 and described in Table 7-37.

Return to the Summary Table.

Register to configure gated driver settings2

**Figure 7-75. GD_CONFIG2 Register**

| 31 | 30 | 29 | 28 | 27 | 26 | 25 | 24 |
|---|---|---|---|---|---|---|---|
| PARITY | DELAY_COMP_EN | TARGET_DELAY | | | | RESERVED | BUCK_PS_DIS |
| R/W-0h | R/W-0h | R/W-0h | | | | R/W-0h | R/W-1h |
| **23** | **22** | **21** | **20** | **19** | **18** | **17** | **16** |
| BUCK_CL | BUCK_SEL | | RESERVED | RESERVED | | | |
| R/W-0h | R/W-1h | | R/W-0h | R/W-0h | | | |
| **15** | **14** | **13** | **12** | **11** | **10** | **9** | **8** |
| RESERVED | | | | | | | |
| R/W-0h | | | | | | | |
| **7** | **6** | **5** | **4** | **3** | **2** | **1** | **0** |
| RESERVED | | | | | | | |
| R/W-0h | | | | | | | |

**Table 7-37. GD_CONFIG2 Register Field Descriptions**

| Bit | Field | Type | Reset | Description |
|---|---|---|---|---|
| 31 | PARITY | R/W | 0h | Parity bit |
| 30 | DELAY_COMP_EN | R/W | 0h | Driver delay compensation enable<br>0h = Disable<br>1h = Enable |
| 29-26 | TARGET_DELAY | R/W | 0h | Target delay<br>0h = Automatic based on slew rate<br>1h = 0.4 µs<br>2h = 0.6 µs<br>3h = 0.8 µs<br>4h = 1 µs<br>5h = 1.2 µs<br>6h = 1.4 µs<br>7h = 1.6 µs<br>8h = 1.8 µs<br>9h = 2 µs<br>Ah = 2.2 µs<br>Bh = 2.4 µs<br>Ch = 2.6 µs<br>Dh = 2.8 µs<br>Eh = 3 µs<br>Fh = 3.2 µs |
| 25 | RESERVED | R/W | 0h | Reserved |
| 24 | BUCK_PS_DIS | R/W | 1h | Buck power sequencing disable<br>0h = Buck power sequencing is enabled<br>1h = Buck power sequencing is disabled |
| 23 | BUCK_CL | R/W | 0h | Buck current limit<br>0h = 600 mA<br>1h = 150 mA |
| 22-21 | BUCK_SEL | R/W | 1h | Buck voltage selection<br>0h = Buck voltage is 3.3 V<br>1h = Buck voltage is 5.0 V<br>2h = Buck voltage is 4.0 V<br>3h = Buck voltage is 5.7 V |

Copyright © 2023 Texas Instruments Incorporated

**Table 7-37. GD_CONFIG2 Register Field Descriptions (continued)**

| Bit | Field | Type | Reset | Description |
|---|---|---|---|---|
| 20 | RESERVED | R/W | 0h | Reserved |
| 19-0 | RESERVED | R/W | 0h | Reserved |


Copyright © 2023 Texas Instruments Incorporated

## 7.8 RAM (Volatile) Register Map

### 7.8.1 Fault_Status Registers

Table 7-38 lists the memory-mapped registers for the Fault_Status registers. All register offset addresses not listed in Table 7-38 should be considered as reserved locations and the register contents should not be modified.

**Table 7-38. FAULT_STATUS Registers**

| Offset | Acronym | Register Name | Section |
|---|---|---|---|
| E0h | GATE_DRIVER_FAULT_STATUS | Fault Status Register | GATE_DRIVER_FAULT_STATUS Register (Offset = E0h) [Reset = 00000000h] |
| E2h | CONTROLLER_FAULT_STATUS | Fault Status Register | CONTROLLER_FAULT_STATUS Register (Offset = E2h) [Reset = 00000000h] |

Complex bit access types are encoded to fit into small table cells. Table 7-39 shows the codes that are used for access types in this section.

**Table 7-39. Fault_Status Access Type Codes**

| Access Type | Code | Description |
|---|---|---|
| **Read Type** | | |
| R | R | Read |
| **Reset or Default Value** | | |
| *-n* | | Value after reset or the default value |

#### 7.8.1.1 GATE_DRIVER_FAULT_STATUS Register (Offset = E0h) [Reset = 00000000h]

GATE_DRIVER_FAULT_STATUS is shown in Figure 7-76 and described in Table 7-40.

Return to the Summary Table.

Status of various faults

**Figure 7-76. GATE_DRIVER_FAULT_STATUS Register**

| 31 | 30 | 29 | 28 | 27 | 26 | 25 | 24 |
|---|---|---|---|---|---|---|---|
| DRIVER_FAULT | BK_FLT | RESERVED | OCP | NPOR | OVP | OT | RESERVED |
| R-0h | R-0h | R-0h | R-0h | R-0h | R-0h | R-0h | R-0h |
| 23 | 22 | 21 | 20 | 19 | 18 | 17 | 16 |
| OTW | TSD | OCP_HC | OCP_LC | OCP_HB | OCP_LB | OCP_HA | OCP_LA |
| R-0h | R-0h | R-0h | R-0h | R-0h | R-0h | R-0h | R-0h |
| 15 | 14 | 13 | 12 | 11 | 10 | 9 | 8 |
| RESERVED | OTP_ERR | BUCK_OCP | BUCK_UV | VCP_UV | RESERVED | | |
| R-0h | R-0h | R-0h | R-0h | R-0h | R-0h | | |
| 7 | 6 | 5 | 4 | 3 | 2 | 1 | 0 |
| RESERVED | | | | | | | |
| R-0h | | | | | | | |

**Table 7-40. GATE_DRIVER_FAULT_STATUS Register Field Descriptions**

| Bit | Field | Type | Reset | Description |
|---|---|---|---|---|
| 31 | DRIVER_FAULT | R | 0h | Logic OR of driver fault registers<br>0h = No Gate Driver fault condition is detected<br>1h = Gate Driver fault condition is detected |
| 30 | BK_FLT | R | 0h | Buck fault<br>0h = No buck regulator fault condition is detected<br>1h = Buck regulator fault condition is detected |
| 29 | RESERVED | R | 0h | Reserved |
| 28 | OCP | R | 0h | Overcurrent protection status<br>0h = No overcurrent condition is detected<br>1h = Overcurrent condition is detected |
| 27 | NPOR | R | 0h | Supply power on reset<br>0h = Power on reset condition is detected on VM<br>1h = No power-on-reset condition is detected on VM |
| 26 | OVP | R | 0h | Supply overvoltage protection status<br>0h = No overvoltage condition is detected on VM<br>1h = Overvoltage condition is detected on VM |
| 25 | OT | R | 0h | Overtemperature fault status<br>0h = No overtemperature warning / shutdown is detected<br>1h = Overtemperature warning / shutdown is detected |
| 24 | RESERVED | R | 0h | Reserved |
| 23 | OTW | R | 0h | Overtemperature warning status<br>0h = No overtemperature warning is detected<br>1h = Overtemperature warning is detected |
| 22 | TSD | R | 0h | Overtemperature shutdown status<br>0h = No overtemperature shutdown is detected<br>1h = Overtemperature shutdown is detected |
| 21 | OCP_HC | R | 0h | Overcurrent status on high-side switch of OUTC<br>0h = No overcurrent detected on high-side switch of OUTC<br>1h = Overcurrent detected on high-side switch of OUTC |


Copyright © 2023 Texas Instruments Incorporated

**Table 7-40. GATE_DRIVER_FAULT_STATUS Register Field Descriptions (continued)**

| Bit | Field | Type | Reset | Description |
|---|---|---|---|---|
| 20 | OCP_LC | R | 0h | Overcurrent status on low-side switch of OUTC<br>0h = No overcurrent detected on low-side switch of OUTC<br>1h = Overcurrent detected on low-side switch of OUTC |
| 19 | OCP_HB | R | 0h | Overcurrent status on high-side switch of OUTB<br>0h = No overcurrent detected on high-side switch of OUTB<br>1h = Overcurrent detected on high-side switch of OUTB |
| 18 | OCP_LB | R | 0h | Overcurrent status on low-side switch of OUTB<br>0h = No overcurrent detected on low-side switch of OUTB<br>1h = Overcurrent detected on low-side switch of OUTB |
| 17 | OCP_HA | R | 0h | Overcurrent status on high-side switch of OUTA<br>0h = No overcurrent detected on high-side switch of OUTA<br>1h = Overcurrent detected on high-side switch of OUTA |
| 16 | OCP_LA | R | 0h | Overcurrent status on low-side switch of OUTA<br>0h = No overcurrent detected on low-side switch of OUTA<br>1h = Overcurrent detected on low-side switch of OUTA |
| 15 | RESERVED | R | 0h | Reserved |
| 14 | OTP_ERR | R | 0h | One-time programmable (OTP) error<br>0h = No OTP error is detected<br>1h = OTP Error is detected |
| 13 | BUCK_OCP | R | 0h | Buck regulator overcurrent status<br>0h = No buck regulator overcurrent is detected<br>1h = Buck regulator overcurrent is detected |
| 12 | BUCK_UV | R | 0h | Buck regulator undervoltage status<br>0h = No buck regulator undervoltage is detected<br>1h = Buck regulator undervoltage is detected |
| 11 | VCP_UV | R | 0h | Charge pump undervoltage status<br>0h = No charge pump undervoltage is detected<br>1h = Charge pump undervoltage is detected |
| 10-0 | RESERVED | R | 0h | Reserved |

Copyright © 2023 Texas Instruments Incorporated

### 7.8.1.2 CONTROLLER_FAULT_STATUS Register (Offset = E2h) [Reset = 00000000h]

CONTROLLER_FAULT_STATUS is shown in Figure 7-77 and described in Table 7-41.

Return to the Summary Table.

Status of various faults

**Figure 7-77. CONTROLLER_FAULT_STATUS Register**

| 31 | 30 | 29 | 28 | 27 | 26 | 25 | 24 |
|---|---|---|---|---|---|---|---|
| CONTROLLER_FAULT | RESERVED | IPD_FREQ_FAULT | IPD_T1_FAULT | IPD_T2_FAULT | RESERVED | | |
| R-0h | R-0h | R-0h | R-0h | R-0h | R-0h | | |
| **23** | **22** | **21** | **20** | **19** | **18** | **17** | **16** |
| ABN_SPEED | LOSS_OF_SYNC | NO_MTR | MTR_LCK | CBC_ILIMIT | LOCK_ILIMIT | MTR_UNDER_VOLTAGE | MTR_OVER_VOLTAGE |
| R-0h | R-0h | R-0h | R-0h | R-0h | R-0h | R-0h | R-0h |
| **15** | **14** | **13** | **12** | **11** | **10** | **9** | **8** |
| EXT_WD_TIMEOUT | RESERVED | | | | | | |
| R-0h | R-0h | | | | | | |
| **7** | **6** | **5** | **4** | **3** | **2** | **1** | **0** |
| RESERVED | | | | | STL_EN | STL_STATUS | APP_RESET |
| R-0h | | | | | R-0h | R-0h | R-0h |

**Table 7-41. CONTROLLER_FAULT_STATUS Register Field Descriptions**

| Bit | Field | Type | Reset | Description |
|---|---|---|---|---|
| 31 | CONTROLLER_FAULT | R | 0h | Logic OR of controller fault registers<br>0h = No controller fault condition is detected<br>1h = Controller fault condition is detected |
| 30 | RESERVED | R | 0h | Reserved |
| 29 | IPD_FREQ_FAULT | R | 0h | Indicates IPD frequency fault<br>0h = No IPD frequency fault detected<br>1h = IPD frequency fault detected |
| 28 | IPD_T1_FAULT | R | 0h | Indicates IPD T1 fault<br>0h = No IPD T1 fault detected<br>1h = IPD T1 fault detected |
| 27 | IPD_T2_FAULT | R | 0h | Indicates IPD T2 fault<br>0h = No IPD T2 fault detected<br>1h = IPD T2 fault detected |
| 26-24 | RESERVED | R | 0h | Reserved |
| 23 | ABN_SPEED | R | 0h | Indicates abnormal speed motor lock condition<br>0h = No abnormal speed fault detected<br>1h = Abnormal Speed fault detected |
| 22 | LOSS_OF_SYNC | R | 0h | Indicates sync lost motor lock condition<br>0h = No sync lost fault detected<br>1h = Sync lost fault detected |
| 21 | NO_MTR | R | 0h | Indicates no motor fault<br>0h = No motor fault not detected<br>1h = No motor fault detected |
| 20 | MTR_LCK | R | 0h | Indicates when one of the motor lock is triggered<br>0h = Motor lock fault not detected<br>1h = Motor lock fault detected |
| 19 | CBC_ILIMIT | R | 0h | Indicates CBC current limit fault<br>0h = No CBC fault detected<br>1h = CBC fault detected |


Copyright © 2023 Texas Instruments Incorporated

**Table 7-41. CONTROLLER_FAULT_STATUS Register Field Descriptions (continued)**

| Bit | Field | Type | Reset | Description |
|---|---|---|---|---|
| 18 | LOCK_ILIMIT | R | 0h | Indicates lock detection current limit fault<br>0h = No lock current limit fault detected<br>1h = Lock current limit fault detected |
| 17 | MTR_UNDER_VOLTAGE | R | 0h | Indicates motor undervoltage fault<br>0h = No motor undervoltage detected<br>1h = Motor undervoltage detected |
| 16 | MTR_OVER_VOLTAGE | R | 0h | Indicates motor overvoltage fault<br>0h = No motor overvoltage detected<br>1h = Motor overvoltage detected |
| 15 | EXT_WD_TIMEOUT | R | 0h | Indicates external watchdog timeout fault<br>0h = No external watchdog timeout fault detected<br>1h = External watchdog timeout fault detected |
| 14-3 | RESERVED | R | 0h | Reserved |
| 2 | STL_EN | R | 0h | Indicates STL is enabled in EEPROM<br>0h = STL Disable<br>1h = STL Enable |
| 1 | STL_STATUS | R | 0h | Indicates STL success criteria Pass = 1b; Fail = 0b<br>0h = STL Fail<br>1h = STL Pass |
| 0 | APP_RESET | R | 0h | App reset<br>0h = App Reset Fail<br>1h = App Reset Successful |

### 7.8.2 System_Status Registers

Table 7-42 lists the memory-mapped registers for the System_Status registers. All register offset addresses not listed in Table 7-42 should be considered as reserved locations and the register contents should not be modified.

**Table 7-42. SYSTEM_STATUS Registers**

| Offset | Acronym | Register Name | Section |
|---|---|---|---|
| E4h | SYS_STATUS1 | System Status Register1 | SYS_STATUS1 Register (Offset = E4h) [Reset = 00000000h] |
| EAh | SYS_STATUS2 | System Status Register2 | SYS_STATUS2 Register (Offset = EAh) [Reset = 00000000h] |
| ECh | SYS_STATUS3 | System Status Register3 | SYS_STATUS3 Register (Offset = ECh) [Reset = 00000000h] |

Complex bit access types are encoded to fit into small table cells. Table 7-43 shows the codes that are used for access types in this section.

**Table 7-43. System_Status Access Type Codes**

| Access Type | Code | Description |
|---|---|---|
| **Read Type** | | |
| R | R | Read |
| **Reset or Default Value** | | |
| *-n* | | Value after reset or the default value |

#### 7.8.2.1 SYS_STATUS1 Register (Offset = E4h) [Reset = 00000000h]

SYS_STATUS1 is shown in Figure 7-78 and described in Table 7-44.

Return to the Summary Table.

Status of various system and motor parameters

**Figure 7-78. SYS_STATUS1 Register**

| 31 | 30 | 29 | 28 | 27 | 26 | 25 | 24 |
|---|---|---|---|---|---|---|---|
| VOLT_MAG | | | | | | | |
| R-0h | | | | | | | |
| 23 | 22 | 21 | 20 | 19 | 18 | 17 | 16 |
| VOLT_MAG | | | | | | | |
| R-0h | | | | | | | |
| 15 | 14 | 13 | 12 | 11 | 10 | 9 | 8 |
| SPEED_CMD | | | | | | | |
| R-0h | | | | | | | |
| 7 | 6 | 5 | 4 | 3 | 2 | 1 | 0 |
| SPEED_CMD | | | | | | | I2C_ENTRY_STATUS |
| R-0h | | | | | | | R-0h |

**Table 7-44. SYS_STATUS1 Register Field Descriptions**

| Bit | Field | Type | Reset | Description |
|---|---|---|---|---|
| 31-16 | VOLT_MAG | R | 0h | Applied DC input voltage (/10 to get DC input voltage in V) |
| 15-1 | SPEED_CMD | R | 0h | Decoded speed command in PWM/Analog/Freq. mode<br>(SPEED_CMD (%) = SPEED_CMD/32767 * 100%) |
| 0 | I2C_ENTRY_STATUS | R | 0h | Indicates if I2C entry has happened<br>0h = I2C mode not entered through pin sequence<br>1h = I2C mode entered through pin sequence |


Copyright © 2023 Texas Instruments Incorporated

### 7.8.2.2 SYS_STATUS2 Register (Offset = EAh) [Reset = 00000000h]

SYS_STATUS2 is shown in Figure 7-79 and described in Table 7-45.

Return to the Summary Table.

Status of various system and motor parameters

**Figure 7-79. SYS_STATUS2 Register**

| 31 | 30 | 29 | 28 | 27 | 26 | 25 | 24 |
|---|---|---|---|---|---|---|---|
| STATE | | | | RESERVED | | | |
| R-0h | | | | R-0h | | | |
| 23 | 22 | 21 | 20 | 19 | 18 | 17 | 16 |
| RESERVED | | | | | | STL_FAULT | RESERVED |
| R-0h | | | | | | R-0h | R-0h |
| 15 | 14 | 13 | 12 | 11 | 10 | 9 | 8 |
| MOTOR_SPEED | | | | | | | |
| R-0h | | | | | | | |
| 7 | 6 | 5 | 4 | 3 | 2 | 1 | 0 |
| MOTOR_SPEED | | | | | | | |
| R-0h | | | | | | | |

**Table 7-45. SYS_STATUS2 Register Field Descriptions**

| Bit | Field | Type | Reset | Description |
|---|---|---|---|---|
| 31-28 | STATE | R | 0h | Current status of state machine; 4-bit value indicating status of state machine<br>0h = SYSTEM_IDLE<br>1h = MOTOR_START<br>2h = MOTOR_RUN<br>3h = SYSTEM_INIT<br>4h = MOTOR_IPD<br>5h = MOTOR_ALIGN<br>6h = MOTOR_IDLE<br>7h = MOTOR_STOP<br>8h = FAULT<br>9h = MOTOR_DIRECTION<br>Ah = HALL_ALIGN<br>Ch = MOTOR_FREEWHEEL<br>Dh = MOTOR_DESCEL<br>Eh = MOTOR_BRAKE<br>Fh = N/A |
| 27-18 | RESERVED | R | 0h | Reserved |
| 17 | STL_FAULT | R | 0h | STL fault status<br>0h = Pass<br>1h = Fail |
| 16 | RESERVED | R | 0h | Reserved |
| 15-0 | MOTOR_SPEED | R | 0h | Speed output (/10 to get motor electrical speed in Hz) |

Copyright © 2023 Texas Instruments Incorporated

#### 7.8.2.3 SYS_STATUS3 Register (Offset = ECh) [Reset = 00000000h]

SYS_STATUS3 is shown in Figure 7-80 and described in Table 7-46.

Return to the Summary Table.

Status of various system and motor parameters

**Figure 7-80. SYS_STATUS3 Register**

| 31 | 30 | 29 | 28 | 27 | 26 | 25 | 24 | 23 | 22 | 21 | 20 | 19 | 18 | 17 | 16 | 15 | 14 | 13 | 12 | 11 | 10 | 9 | 8 | 7 | 6 | 5 | 4 | 3 | 2 | 1 | 0 |
|---|---|---|---|---|---|---|---|---|---|---|---|---|---|---|---|---|---|---|---|---|---|---|---|---|---|---|---|---|---|---|---|
| DC_BUS_CURR | | | | | | | | | | | | | | | | DC_BATT_POW | | | | | | | | | | | | | | | |
| R-0h | | | | | | | | | | | | | | | | R-0h | | | | | | | | | | | | | | | |

**Table 7-46. SYS_STATUS3 Register Field Descriptions**

| Bit | Field | Type | Reset | Description |
|---|---|---|---|---|
| 31-16 | DC_BUS_CURR | R | 0h | DC bus current (/256 to get DC bus current in A) |
| 15-0 | DC_BATT_POW | R | 0h | Battery (input) power (/64 to get battery power in W) |

### 7.8.3 Algo_Control Registers

Table 7-47 lists the memory-mapped registers for the Algo_Control registers. All register offset addresses not listed in Table 7-47 should be considered as reserved locations and the register contents should not be modified.

**Table 7-47. ALGO_CONTROL Registers**

| Offset | Acronym | Register Name | Section |
|---|---|---|---|
| E6h | ALGO_CTRL1 | Algorithm Control Parameters | ALGO_CTRL1 Register (Offset = E6h) [Reset = 00000000h] |

Complex bit access types are encoded to fit into small table cells. Table 7-48 shows the codes that are used for access types in this section.

**Table 7-48. Algo_Control Access Type Codes**

| Access Type | Code | Description |
|---|---|---|
| **Write Type** | | |
| W | W | Write |
| **Reset or Default Value** | | |
| *-n* | | Value after reset or the default value |


Copyright © 2023 Texas Instruments Incorporated

#### 7.8.3.1 ALGO_CTRL1 Register (Offset = E6h) [Reset = 00000000h]

ALGO_CTRL1 is shown in Figure 7-81 and described in Table 7-49.

Return to the Summary Table.

Algorithm Control Parameters

**Figure 7-81. ALGO_CTRL1 Register**

| 31 | 30 | 29 | 28 | 27 | 26 | 25 | 24 |
|---|---|---|---|---|---|---|---|
| EEPROM_WRT | EEPROM_READ | CLR_FLT | CLR_FLT_RETRY_COUNT | EEPROM_WRITE_ACCESS_KEY | | | |
| W-0h | W-0h | W-0h | W-0h | W-0h | | | |
| **23** | **22** | **21** | **20** | **19** | **18** | **17** | **16** |
| EEPROM_WRITE_ACCESS_KEY | | | | RESERVED | | | |
| W-0h | | | | W-0h | | | |
| **15** | **14** | **13** | **12** | **11** | **10** | **9** | **8** |
| RESERVED | | | | | | | |
| W-0h | | | | | | | |
| **7** | **6** | **5** | **4** | **3** | **2** | **1** | **0** |
| RESERVED | | | | | | | EXT_WD_STATUS_SET |
| W-0h | | | | | | | W-0h |

**Table 7-49. ALGO_CTRL1 Register Field Descriptions**

| Bit | Field | Type | Reset | Description |
|---|---|---|---|---|
| 31 | EEPROM_WRT | W | 0h | Write the configuration to EEPROM<br>1h = Write to the EEPROM registers from shadow registers |
| 30 | EEPROM_READ | W | 0h | Read the default configuration from EEPROM<br>1h = Read the EEPROM registers to shadow registers |
| 29 | CLR_FLT | W | 0h | Clears all faults<br>1h = Clear all the driver and controller faults |
| 28 | CLR_FLT_RETRY_COUNT | W | 0h | Clears fault retry count<br>1h = clear the lock fault retry counts |
| 27-20 | EEPROM_WRITE_ACCESS_KEY | W | 0h | EEPROM write access key; 8-bit key to unlock the EEPROM write command |
| 19-1 | RESERVED | W | 0h | Reserved |
| 0 | EXT_WD_STATUS_SET | W | 0h | Watchdog status to be set by external MCU in I2C watchdog mode<br>0h = Reset automatically by the MCC<br>1h = To set the EXT_WD_STATUS_SET |

### 7.8.4 Device_Control Registers

Table 7-50 lists the memory-mapped registers for the Device_Control registers. All register offset addresses not listed in Table 7-50 should be considered as reserved locations and the register contents should not be modified.

**Table 7-50. DEVICE_CONTROL Registers**

| Offset | Acronym | Register Name | Section |
|---|---|---|---|
| E8h | DEVICE_CTRL | Device Control Parameters | DEVICE_CTRL Register (Offset = E8h) [Reset = 00000000h] |

Complex bit access types are encoded to fit into small table cells. Table 7-51 shows the codes that are used for access types in this section.

**Table 7-51. Device_Control Access Type Codes**

| Access Type | Code | Description |
|---|---|---|
| **Read Type** | | |
| R | R | Read |
| **Write Type** | | |
| W | W | Write |
| **Reset or Default Value** | | |
| *-n* | | Value after reset or the default value |


Copyright © 2023 Texas Instruments Incorporated

#### 7.8.4.1 DEVICE_CTRL Register (Offset = E8h) [Reset = 00000000h]

DEVICE_CTRL is shown in Figure 7-82 and described in Table 7-52.

Return to the Summary Table.

Device Control Parameters

**Figure 7-82. DEVICE_CTRL Register**

| 31 | 30 | 29 | 28 | 27 | 26 | 25 | 24 |
|---|---|---|---|---|---|---|---|
| RESERVED | SPEED_CTRL | | | | | | |
| W-0h | W-0h | | | | | | |
| 23 | 22 | 21 | 20 | 19 | 18 | 17 | 16 |
| SPEED_CTRL | | | | | | | |
| W-0h | | | | | | | |
| 15 | 14 | 13 | 12 | 11 | 10 | 9 | 8 |
| OVERRIDE | RESERVED | | | | | | |
| W-0h | R-0h | | | | | | |
| 7 | 6 | 5 | 4 | 3 | 2 | 1 | 0 |
| RESERVED | | | | | | | |
| R-0h | | | | | | | |

**Table 7-52. DEVICE_CTRL Register Field Descriptions**

| Bit | Field | Type | Reset | Description |
|---|---|---|---|---|
| 31 | RESERVED | W | 0h | Reserved |
| 30-16 | SPEED_CTRL | W | 0h | Digital speed command (SPEED_CTRL (%) = SPEED_CTRL/32767 * 100%) |
| 15 | OVERRIDE | W | 0h | Speed input select for I2C vs speed pin<br>0h = SPEED_CMD using Analog/Freq/PWM mode<br>1h = SPEED_CMD using SPD_CTRL[14:0] |
| 14-0 | RESERVED | R | 0h | Reserved |

### 7.8.5 Algorithm_Variables Registers

Table 7-53 lists the memory-mapped registers for the Algorithm_Variables registers. All register offset addresses not listed in Table 7-53 should be considered as reserved locations and the register contents should not be modified.

**Table 7-53. ALGORITHM_VARIABLES Registers**

| Offset | Acronym | Register Name | Section |
|---|---|---|---|
| 40Ch | INPUT_DUTY | Input Duty Cycle | INPUT_DUTY Register (Offset = 40Ch) [Reset = 00000000h] |
| 4F6h | CURRENT_DUTY | Current Duty Cycle | CURRENT_DUTY Register (Offset = 4F6h) [Reset = 00000000h] |
| 506h | SET_DUTY | Set Duty Cycle | SET_DUTY Register (Offset = 506h) [Reset = 00000000h] |
| 5B2h | MOTOR_SPEED_PU | Motor Speed in PU | MOTOR_SPEED_PU Register (Offset = 5B2h) [Reset = 00000000h] |
| 6F4h | DC_BUS_POWER_PU | DC Bus Power in PU | DC_BUS_POWER_PU Register (Offset = 6F4h) [Reset = 00000000h] |

Complex bit access types are encoded to fit into small table cells. Table 7-54 shows the codes that are used for access types in this section.

Copyright © 2023 Texas Instruments Incorporated

**Table 7-54. Algorithm_Variables Access Type Codes**

| Access Type | Code | Description |
|---|---|---|
| **Read Type** | | |
| R | R | Read |
| **Reset or Default Value** | | |
| *-n* | | Value after reset or the default value |


Copyright © 2023 Texas Instruments Incorporated

#### 7.8.5.1 INPUT_DUTY Register (Offset = 40Ch) [Reset = 00000000h]

INPUT_DUTY is shown in Figure 7-83 and described in Table 7-55.

Return to the Summary Table.

Input duty cycle from SPEED pin or SPEED_CMD (Input duty cycle( in %) = (Measured voltage on DAC pin) / 3V *100 )

**Figure 7-83. INPUT_DUTY Register**

| 31 | 30 | 29 | 28 | 27 | 26 | 25 | 24 | 23 | 22 | 21 | 20 | 19 | 18 | 17 | 16 | 15 | 14 | 13 | 12 | 11 | 10 | 9 | 8 | 7 | 6 | 5 | 4 | 3 | 2 | 1 | 0 |
|---|---|---|---|---|---|---|---|---|---|---|---|---|---|---|---|---|---|---|---|---|---|---|---|---|---|---|---|---|---|---|---|
| INPUT_DUTY | | | | | | | | | | | | | | | | | | | | | | | | | | | | | | | |
| R-0h | | | | | | | | | | | | | | | | | | | | | | | | | | | | | | | |

**Table 7-55. INPUT_DUTY Register Field Descriptions**

| Bit | Field | Type | Reset | Description |
|---|---|---|---|---|
| 31-0 | INPUT_DUTY | R | 0h | 32-bit value indicating the duty cycle that the user commands Input duty cycle (in %) = (Input Duty Cycle / $2^{30}$) * 100 |

### 7.8.5.2 CURRENT_DUTY Register (Offset = 4F6h) [Reset = 00000000h]

CURRENT_DUTY is shown in Figure 7-84 and described in Table 7-56.

Return to the Summary Table.

Current duty cycle (Current duty cycle( in %) = (Measured voltage on DAC pin) / 3V *100 )

**Figure 7-84. CURRENT_DUTY Register**

| 31 | 30 | 29 | 28 | 27 | 26 | 25 | 24 | 23 | 22 | 21 | 20 | 19 | 18 | 17 | 16 | 15 | 14 | 13 | 12 | 11 | 10 | 9 | 8 | 7 | 6 | 5 | 4 | 3 | 2 | 1 | 0 |
|---|---|---|---|---|---|---|---|---|---|---|---|---|---|---|---|---|---|---|---|---|---|---|---|---|---|---|---|---|---|---|---|
| CURRENT_DUTY | | | | | | | | | | | | | | | | | | | | | | | | | | | | | | | |
| R-0h | | | | | | | | | | | | | | | | | | | | | | | | | | | | | | | |

**Table 7-56. CURRENT_DUTY Register Field Descriptions**

| Bit | Field | Type | Reset | Description |
|---|---|---|---|---|
| 31-0 | CURRENT_DUTY | R | 0h | 32-bit value indicating the duty cycle that is currently being applied. Current duty cycle (in %) = (Current Duty Cycle / $2^{30}$) * 100 |


Copyright © 2023 Texas Instruments Incorporated

#### 7.8.5.3 SET_DUTY Register (Offset = 506h) [Reset = 00000000h]

SET_DUTY is shown in Figure 7-85 and described in Table 7-57.

Return to the Summary Table.

Target duty cycle (Set duty cycle( in %) = (Measured voltage on DAC pin) / 3V *100 )

**Figure 7-85. SET_DUTY Register**

| 31 | 30 | 29 | 28 | 27 | 26 | 25 | 24 | 23 | 22 | 21 | 20 | 19 | 18 | 17 | 16 | 15 | 14 | 13 | 12 | 11 | 10 | 9 | 8 | 7 | 6 | 5 | 4 | 3 | 2 | 1 | 0 |
|---|---|---|---|---|---|---|---|---|---|---|---|---|---|---|---|---|---|---|---|---|---|---|---|---|---|---|---|---|---|---|---|
| SET_DUTY | | | | | | | | | | | | | | | | | | | | | | | | | | | | | | | |
| R-0h | | | | | | | | | | | | | | | | | | | | | | | | | | | | | | | |

**Table 7-57. SET_DUTY Register Field Descriptions**

| Bit | Field | Type | Reset | Description |
|---|---|---|---|---|
| 31-0 | SET_DUTY | R | 0h | 32-bit value indicating the duty cycle that the FW wants. Set duty cycle (in %) = (Set Duty Cycle / $2^{30}$) * 100 |

### 7.8.5.4 MOTOR_SPEED_PU Register (Offset = 5B2h) [Reset = 00000000h]

MOTOR_SPEED_PU is shown in Figure 7-86 and described in Table 7-58.

Return to the Summary Table.

Motor speed in PU (Motor speed (in Hz) = (Measured voltage on DAC pin) / 3V * Maximum speed (in Hz)) Maximum speed (in Hz) = MAX_SPEED/16

**Figure 7-86. MOTOR_SPEED_PU Register**

| 31 | 30 | 29 | 28 | 27 | 26 | 25 | 24 | 23 | 22 | 21 | 20 | 19 | 18 | 17 | 16 | 15 | 14 | 13 | 12 | 11 | 10 | 9 | 8 | 7 | 6 | 5 | 4 | 3 | 2 | 1 | 0 |
|---|---|---|---|---|---|---|---|---|---|---|---|---|---|---|---|---|---|---|---|---|---|---|---|---|---|---|---|---|---|---|---|
| MOTOR_SPEED_PU | | | | | | | | | | | | | | | | | | | | | | | | | | | | | | | |
| R-0h | | | | | | | | | | | | | | | | | | | | | | | | | | | | | | | |

**Table 7-58. MOTOR_SPEED_PU Register Field Descriptions**

| Bit | Field | Type | Reset | Description |
|---|---|---|---|---|
| 31-0 | MOTOR_SPEED_PU | R | 0h | 32-bit value indicating the speed of the motor. Motor speed (in Hz) = (Motor Speed in PU / $2^{30}$) * (MAX_SPEED / 16) |


Copyright © 2023 Texas Instruments Incorporated

### 7.8.5.5 DC_BUS_POWER_PU Register (Offset = 6F4h) [Reset = 00000000h]

DC_BUS_POWER_PU is shown in Figure 7-87 and described in Table 7-59.

Return to the Summary Table.

DC bus power in PU (DC bus power( in W) = (Measured voltage on DAC pin) / 3V * Maximum power(in W)) Maximum power (in W) = MAX_POWER/4

**Figure 7-87. DC_BUS_POWER_PU Register**

| 31 | 30 | 29 | 28 | 27 | 26 | 25 | 24 | 23 | 22 | 21 | 20 | 19 | 18 | 17 | 16 | 15 | 14 | 13 | 12 | 11 | 10 | 9 | 8 | 7 | 6 | 5 | 4 | 3 | 2 | 1 | 0 |
|---|---|---|---|---|---|---|---|---|---|---|---|---|---|---|---|---|---|---|---|---|---|---|---|---|---|---|---|---|---|---|---|
| DC_BUS_POWER_PU | | | | | | | | | | | | | | | | | | | | | | | | | | | | | | | |
| R-0h | | | | | | | | | | | | | | | | | | | | | | | | | | | | | | | |

**Table 7-59. DC_BUS_POWER_PU Register Field Descriptions**

| Bit | Field | Type | Reset | Description |
|---|---|---|---|---|
| 31-0 | DC_BUS_POWER_PU | R | 0h | 32-bit value indicating the power drawn by the motor. DC Bus Power (in W) = (DC Bus Power in PU / $2^{30}$) * (MAX_POWER / 4) |

# 8 Application and Implementation

**Note**

Information in the following applications sections is not part of the TI component specification, and TI does not warrant its accuracy or completeness. TI's customers are responsible for determining suitability of components for their purposes. Customers should validate and test their design implementation to confirm system functionality.

## 8.1 Application Information

The MCT8315A device is used in sensorless 3-phase BLDC motor control. The driver provides a high performance, high-reliability, flexible solution for robotic vacuum, fuel pumps, automotive fans and blowers, medical CPAP blowers etc., The following section shows a common application of the MCT8315A device.

## 8.2 Typical Applications

Figure 8-1 shows the typical schematic of MCT8315A.

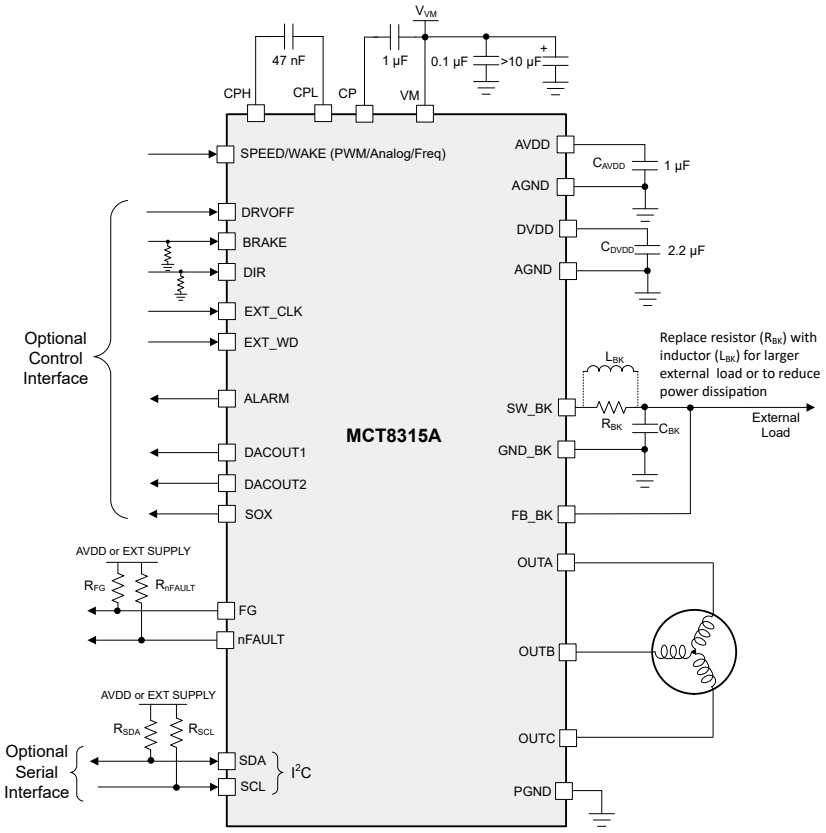


**Figure 8-1. Primary Application Schematic**

Table 8-1 lists the recommended values of the external components for MCT8315A.

**Table 8-1. MCT8315A External Components**

| COMPONENTS | PIN 1 | PIN 2 | RECOMMENDED |
|---|---|---|---|
| $C_{VM1}$ | VM | PGND | X5R or X7R, 0.1-µF, TI recommends a capacitor voltage rating at least twice the normal operating voltage of the device |
| $C_{VM2}$ | VM | PGND | ≥ 10-µF, TI recommends a capacitor voltage rating at least twice the normal operating voltage of the device |
| $C_{CP}$ | CP | VM | X5R or X7R, 16-V, 1-µF capacitor |


Copyright © 2023 Texas Instruments Incorporated

**Table 8-1. MCT8315A External Components (continued)**

| COMPONENTS | PIN 1 | PIN 2 | RECOMMENDED |
|---|---|---|---|
| $C_{FLY}$ | CPH | CPL | X5R or X7R, 47-nF, TI recommends a capacitor voltage rating at least twice the normal operating voltage of the pin |
| $C_{AVDD}$ | AVDD | AGND | X5R or X7R, 1-µF, ≥ 6.3-V. In order for AVDD to accurately regulate output voltage, capacitor should have effective capacitance between 0.7-µF to 1.3-µF at 3.3-V across operating temperature. |
| $C_{DVDD}$ | DVDD | DGND | X5R or X7R, 2.2-µF, ≥ 6.3-V. In order for DVDD to accurately regulate output voltage, capacitor should have effective capacitance between 1.1-µF to 2.5-µF at 1.5-V across operating temperature. |
| $C_{BK}$ | FB_BK | GND_BK | X5R or X7R, buck-output rated capacitor |
| $L_{BK}$ | SW_BK | FB_BK | Buck-output inductor |
| $R_{FG}$ | 1.8 to 5-V Supply | FG | 5.1-kΩ, Pull-up resistor |
| $R_{nFAULT}$ | 1.8 to 5-V Supply | nFAULT | 5.1-kΩ, Pull-up resistor |
| $R_{SDA}$ | 1.8 to 3.3-V Supply | SDA | 5.1-kΩ, Pull-up resistor |
| $R_{SCL}$ | 1.8 to 3.3-V Supply | SCL | 5.1-kΩ, Pull-up resistor |

Recommended application range for MCT8315A is shown in Table 8-2.

**Table 8-2. Recommended Application Range**

| Parameter | Min | Max | Unit |
|---|---|---|---|
| Motor voltage | 4.5 | 35 | V |
| Motor electrical speed | - | 3000 | Hz |
| Peak motor phase current | - | 4 | A |

Default EEPROM configuration for MCT8315A is listed in Table 8-3. Default values are chosen for reliable motor start-up and closed loop operation. Refer to MCT8315A tuning guide which provides step by step procedure to tune a 3-phase BLDC motor in closed loop, conform to use-case and explore features in the device.

**Table 8-3. Recommended Default Values**

| Address Name | Address | Recommended Value |
|---|---|---|
| ISD_CONFIG | 0x00000080 | 0x6EC4C100 |
| MOTOR_STARTUP1 | 0x00000082 | 0x2EA610E4 |
| MOTOR_STARTUP2 | 0x00000084 | 0x1221109C |
| CLOSED_LOOP1 | 0x00000086 | 0x0C321200 |
| CLOSED_LOOP2 | 0x00000088 | 0x024224B0 |
| CLOSED_LOOP3 | 0x0000008A | 0x4CCC03E0 |
| CLOSED_LOOP4 | 0x0000008C | 0x000CE944 |
| CONST_SPEED | 0x0000008E | 0x00A00510 |
| CONST_PWR | 0x00000090 | 0x5DC04C84 |
| FAULT_CONFIG1 | 0x00000092 | 0x60F43025 |
| FAULT_CONFIG2 | 0x00000094 | 0x7F87A009 |
| TRAP_CONFIG1 | 0x0000009A | 0x0548A186 |
| TRAP_CONFIG2 | 0x0000009C | 0x3A840000 |
| 150_DEG_TWO_PH_PROFILE | 0x00000096 | 0x6ADB44A6 |
| 150_DEG_THREE_PH_PROFILE | 0x00000098 | 0x392DFF80 |
| PIN_CONFIG1 | 0x000000A4 | 0x2D720600 |
| PIN_CONFIG2 | 0x000000A6 | 0x08000000 |
| DEVICE_CONFIG | 0x000000A8 | 0x7FFF0000 |
| PERIPH_CONFIG | 0x000000AA | 0x00000000 |

Copyright © 2023 Texas Instruments Incorporated

**Table 8-3. Recommended Default Values (continued)**

| | | |
|---|---|---|
| GD_CONFIG1 | 0x000000AC | 0x1C440000 |
| GD_CONFIG2 | 0x000000AE | 0x00000000 |

Once the device EEPROM is programmed with the desired configuration, device can be operated stand-alone and I$^2$C serial interface is not required anymore. Speed can be commanded using SPEED pin.

Below are the two essential parameters that are required to spin the motor in closed loop.

1. Maximum motor speed.
2. Cycle by cycle (CBC) current limit.

### 8.2.1 Application curves

#### *8.2.1.1 Motor startup*

Figure 8-2 shows the phase current waveforms of various startup methods in MCT8315A such as align, double align, IPD and slow first cycle.

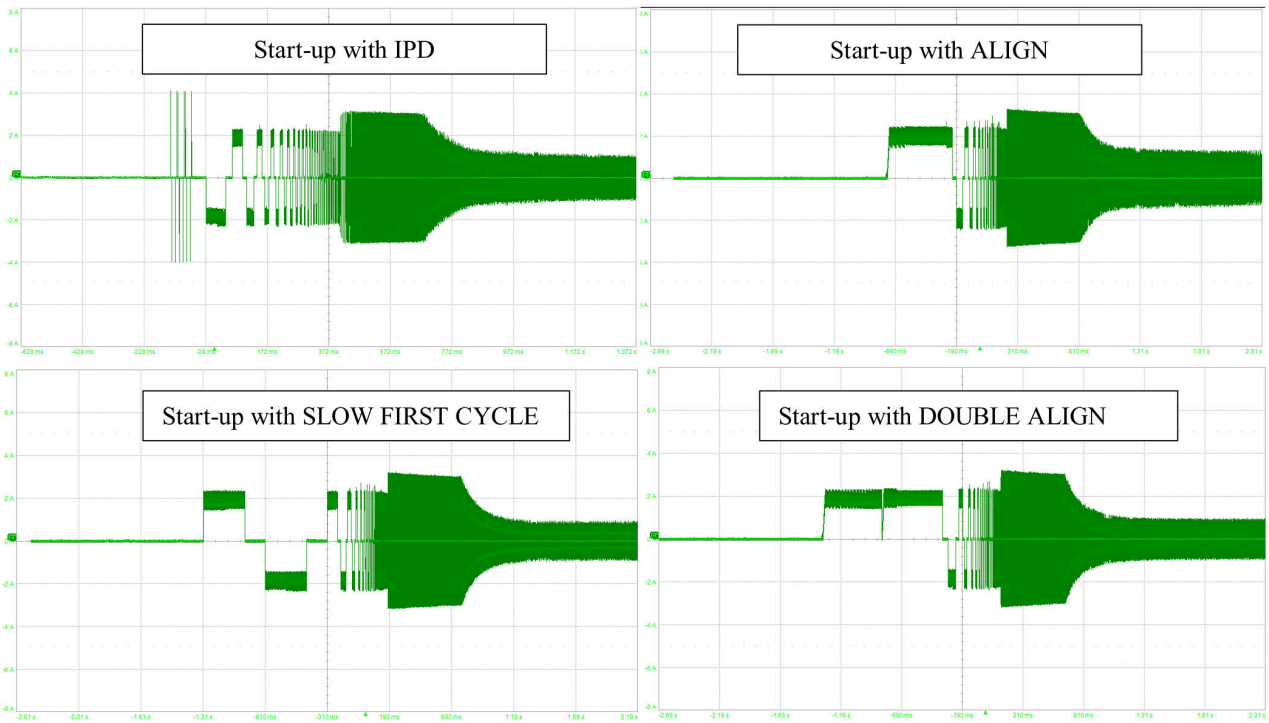


**Figure 8-2. Motor phase current waveforms of all startup methods**

#### *8.2.1.2 120º and variable commutation*

In 120° commutation scheme, each motor phase is driven for 120° and Hi-Z for 60° within each half electrical cycle, resulting in six different commutation states for a motor. Figure 8-3 shows the phase current and current waveform FFT in 120° commutation mode. In variable commutation scheme, MCT8315A device switches dynamically between 120° and 150° trapezoidal commutation depending on motor speed. The device operates


Copyright © 2023 Texas Instruments Incorporated

in 150° mode at lower speeds and moves to 120° mode at higher speeds. Figure 8-4 shows the phase current and current waveform FFT in 150° commutation.

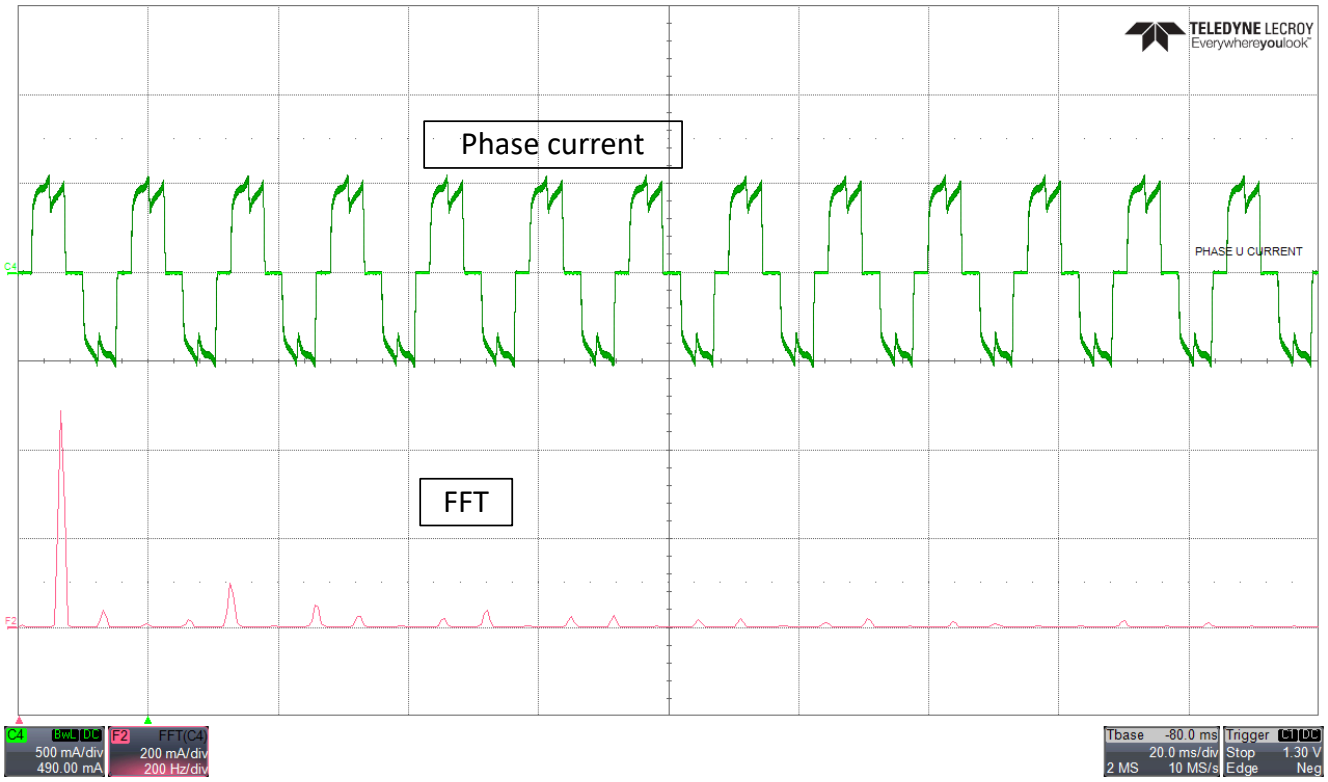


**Figure 8-3. Phase current and FFT - 120 °commutation**

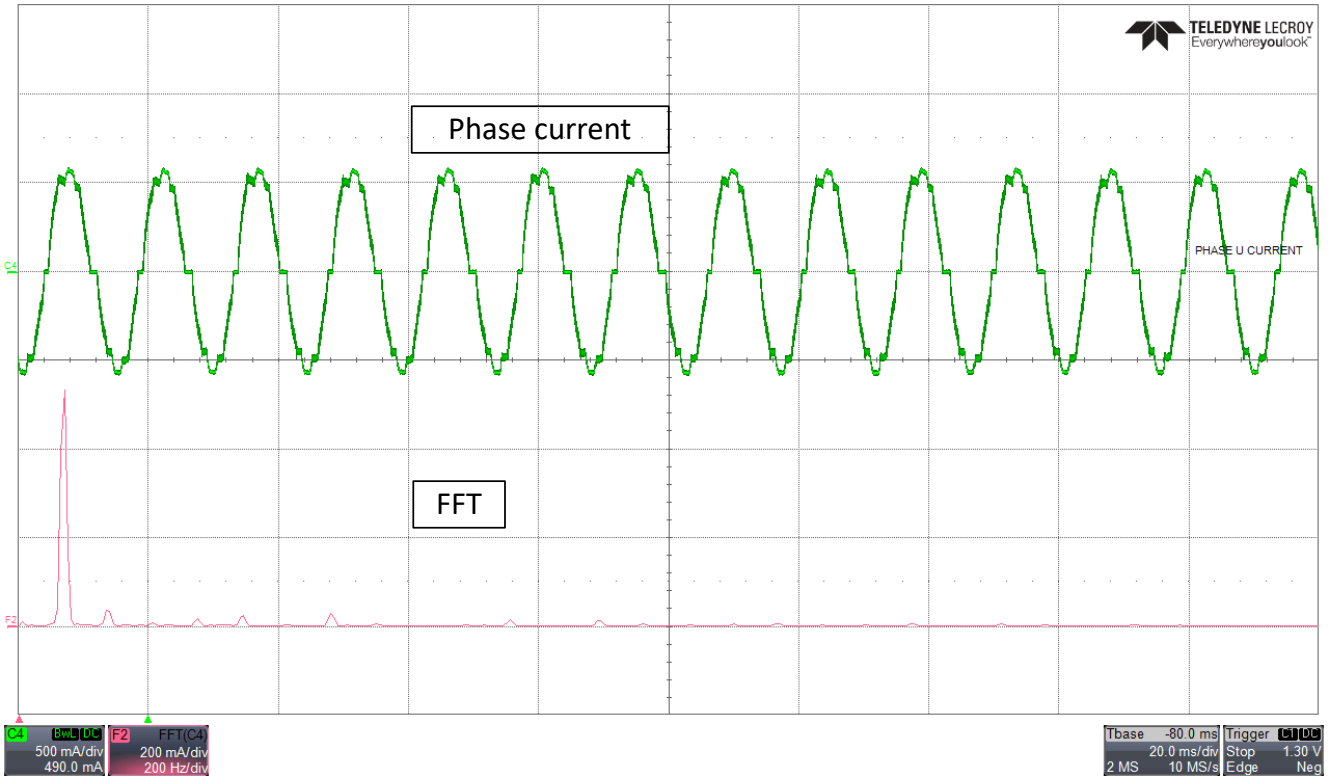


**Figure 8-4. Phase current and FFT - 150°commutation**

### 8.2.1.3 Faster startup time

Startup time is the time taken for the motor to reach the target speed from zero speed. Faster startup time can be achieved in MCT8315A by tuning motor startup, open loop and closed loop settings. Figure 8-5 shows FG, phase current and motor electrical speed waveform. Motor takes 50 ms to reach target speed from zero speed.

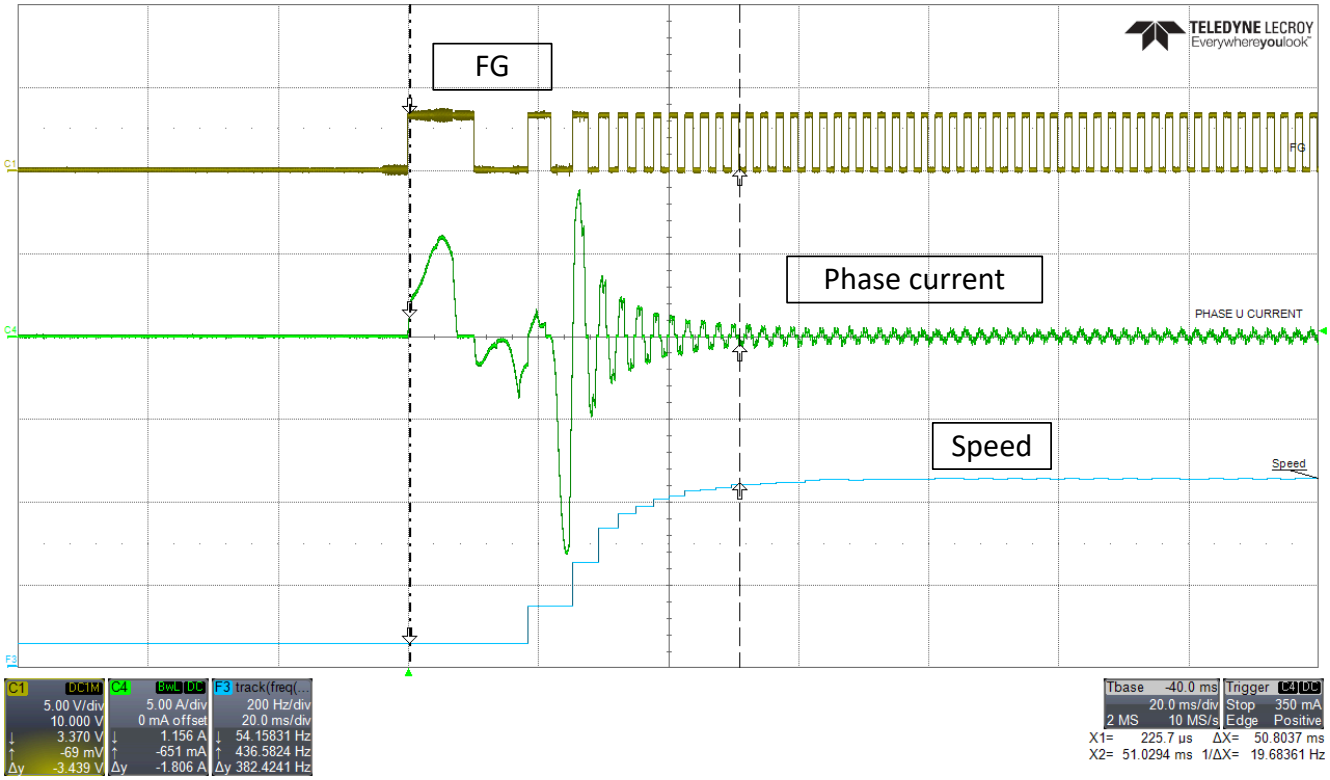


**Figure 8-5. Phase current, FG and motor speed - Faster startup time**

### 8.2.1.4 Setting the BEMF threshold

The BEMF_THRESHOLD1 and BEMF_THRESHOLD2 values used for commutation instant detection in MCT8315A can be computed from the motor phase voltage waveforms during coasting. For example, consider the three-phase voltage waveforms of a BLDC motor while coasting as in Figure 8-6. The motor phase voltage during coasting is the motor back-EMF.

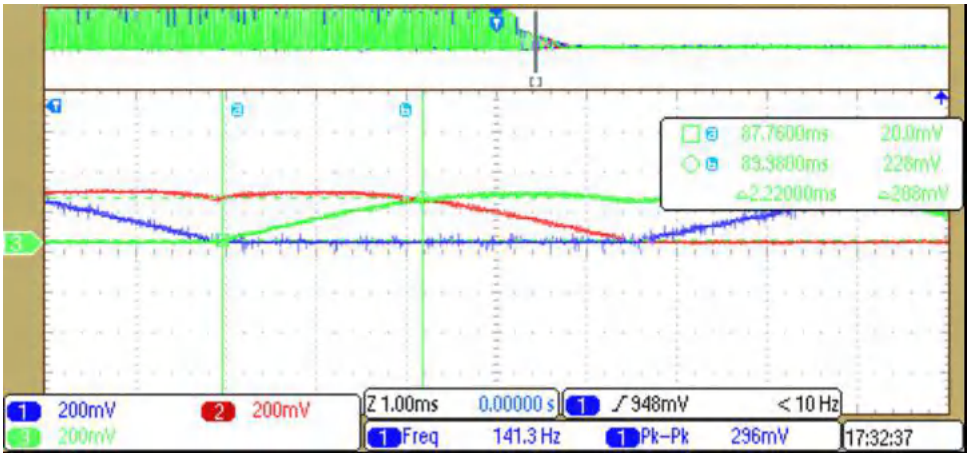


**Figure 8-6. Motor phase voltage during coasting**


Copyright © 2023 Texas Instruments Incorporated

In Figure 8-6, one floating phase voltage interval is denoted by the vertical markers on channel 3. The Vpeak (peak-peak back-EMF) on channel 3 is 208-mV and Tc (commutation interval) is 2.22-ms as denoted by the horizontal and vertical markers on channel 3. The digital equivalent counts for Vpeak and Tc are calculated as follows.

In MCT8315A, a 3-V analog input corresponds to 4095 counts(12-bit) and phase voltage is scaled down by 10x factor before ADC input; therfore, Vpeak of 208-mV corresponds to an ADC input of 20.8mV, which in turn equals 29 ADC counts. Assuming the PWM switching frequency is 25-kHz, one back-EMF sample is available every 40-µs. So, in a time interval of 2.22-ms, a total of 55 back-EMF samples are integrated. Therefore, the BEMF_THRESHOLD1 or BEMF_THRESHOLD2 value calculated as per Equation 7 is (½) * (29/2) * (55/2) = 199. Hence, in this example, BEMF_THRESHOLD1 and BEMF_THRESHOLD2 are set to 8h (corresponding to 200 which is the closest value to 199) for commutation instant detection using back-EMF integration method during fast start-up. The exact speed at which the Vpeak and Tc values are measured to calculate the BEMF_THRESHOLD1 and BEMF_THRESHOLD2 values is not critical (as long as there is sufficient resolution in digital counts) since the product (Vpeak * Tc) is, largely, a constant for a given BLDC motor.

#### *8.2.1.5 Maximum speed*

Figure 8-7 shows phase current, phase voltage and FG of a motor that spins at maximum electrical speed of 3 kHz.

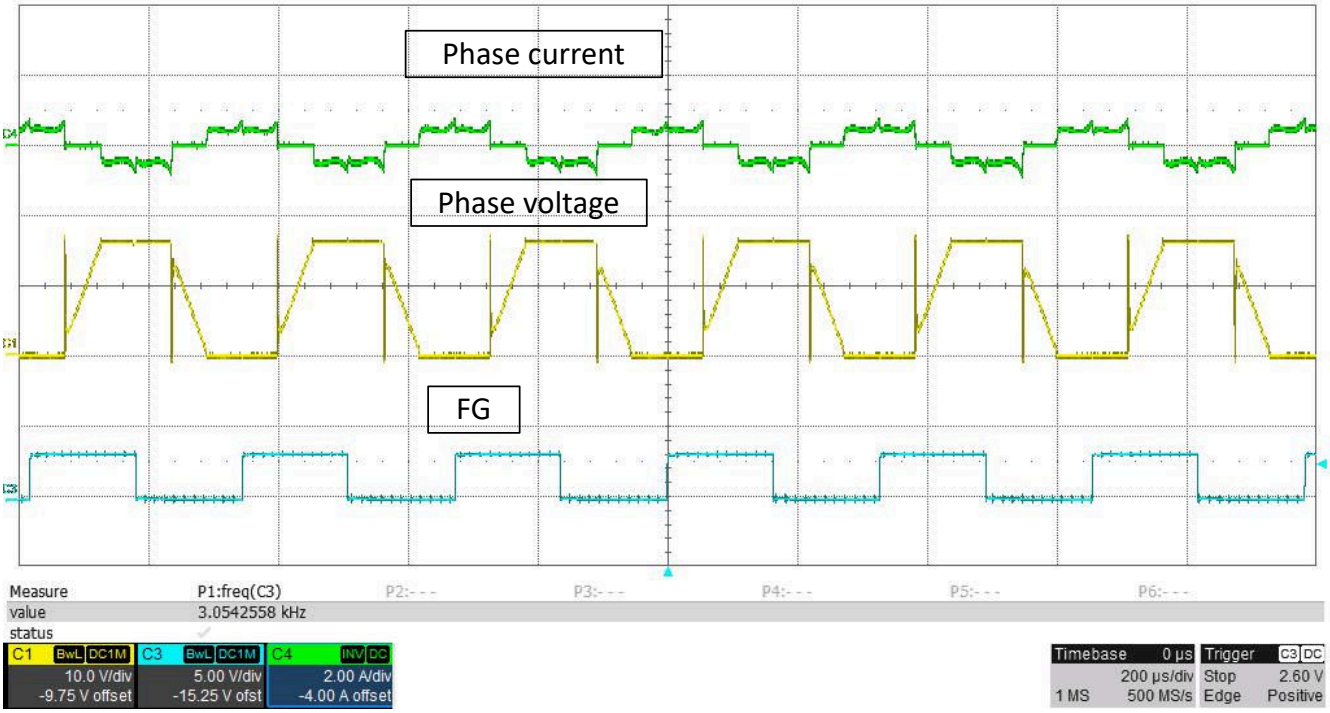


**Figure 8-7. Phase current, Phase voltage and FG at Maximum speed**

#### *8.2.1.6 Faster deceleration*

MCT8315A has features to decelerate the motor quickly. Figure 8-8 shows phase current and motor electrical speed waveform when the motor decelerates from 100% duty cycle to 10% duty cycle. Time taken for the motor to decelerate from 100% duty cycle to 10% duty cycle when fast deceleration is disabled is around 10 seconds. Figure 8-9 shows phase current and motor electrical speed waveform when the motor decelerates from 100% duty cycle to 10% duty cycle. Time taken for the motor to decelerate from 100% duty cycle to 10% duty cycle when fast deceleration is enabled is around 1.5 seconds.

Copyright © 2023 Texas Instruments Incorporated

**Note**

Please note that when fast deceleration is enabled and anti-voltage surge (AVS) is disabled, there might be voltage spikes seen in supply voltage. Enable AVS to protect the power supply from voltage overshoots during motor deceleration.

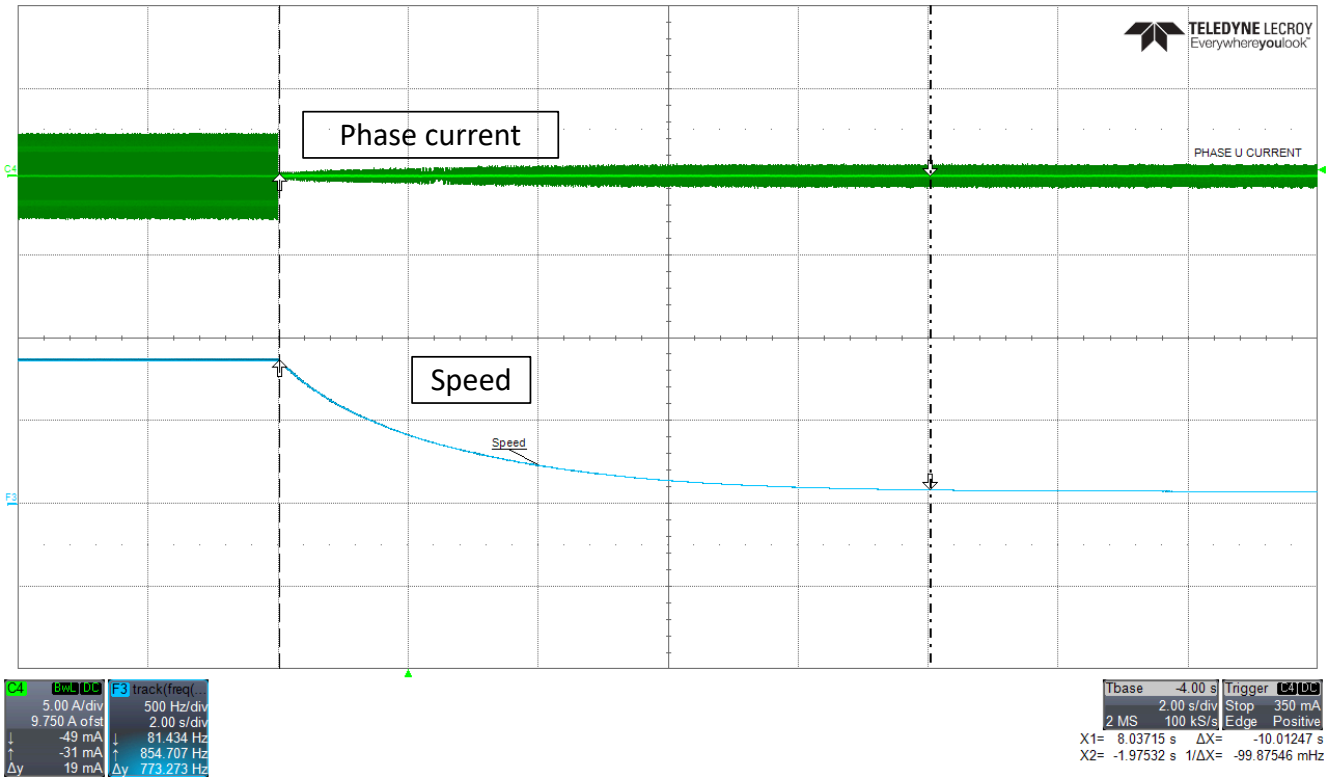


**Figure 8-8. Phase current and motor speed - Faster deceleration disabled**


Copyright © 2023 Texas Instruments Incorporated

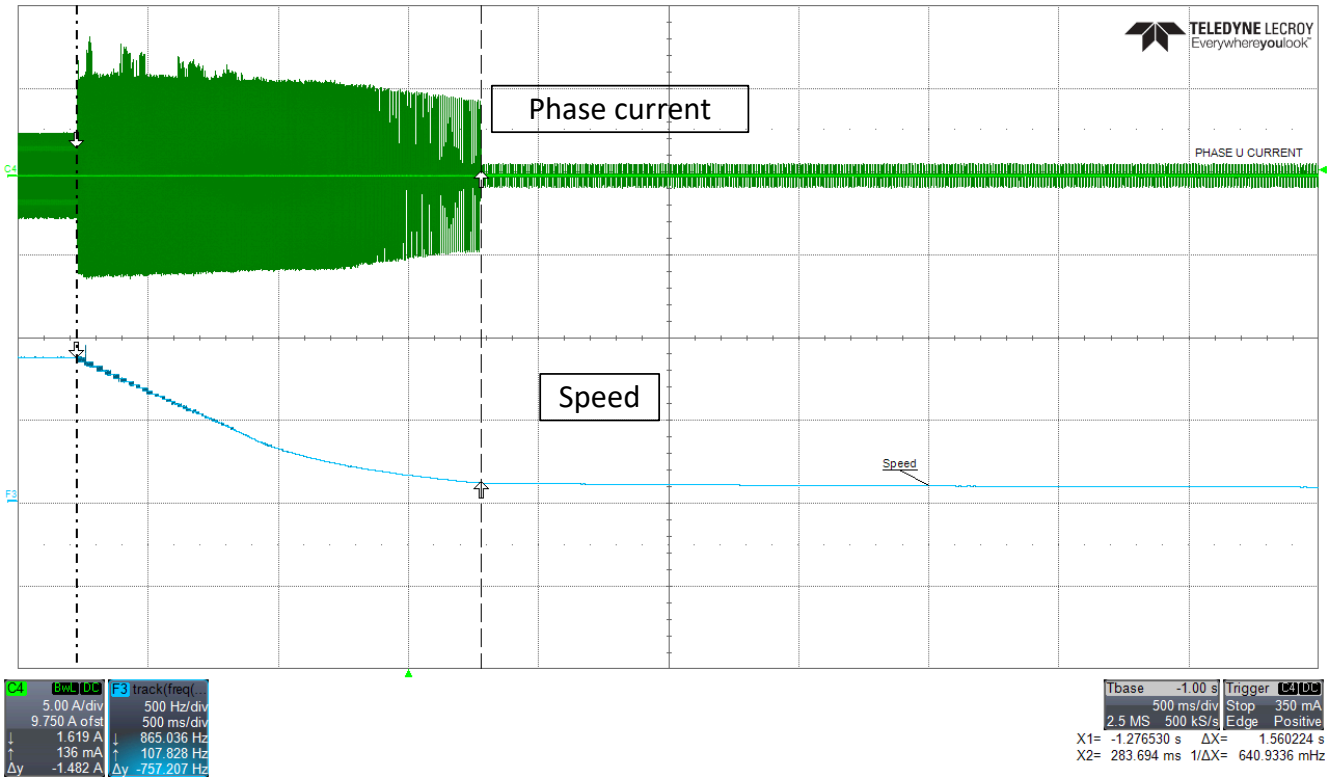


**Figure 8-9. Phase current and motor speed -Faster deceleration enabled**

# 9 Power Supply Recommendations

## 9.1 Bulk Capacitance

Having an appropriate local bulk capacitance is an important factor in motor drive system design. It is generally beneficial to have more bulk capacitance, while the disadvantages are increased cost and physical size.

The amount of local capacitance needed depends on a variety of factors, including:

- The highest current required by the motor system
- The capacitance and current capability of the power supply
- The amount of parasitic inductance between the power supply and motor system
- The acceptable voltage ripple
- The type of motor used (brushed DC, brushless DC, stepper)
- The motor braking method

The inductance between the power supply and the motor drive system limits the rate at which current can change from the power supply. If the local bulk capacitance is too small, the system responds to excessive current demands or dumps from the motor with a change in VM voltage. When adequate bulk capacitance is used, the VM voltage remains stable and high current can be quickly supplied.

The data sheet generally provides a recommended value, but system-level testing is required to determine the appropriate bulk capacitor.

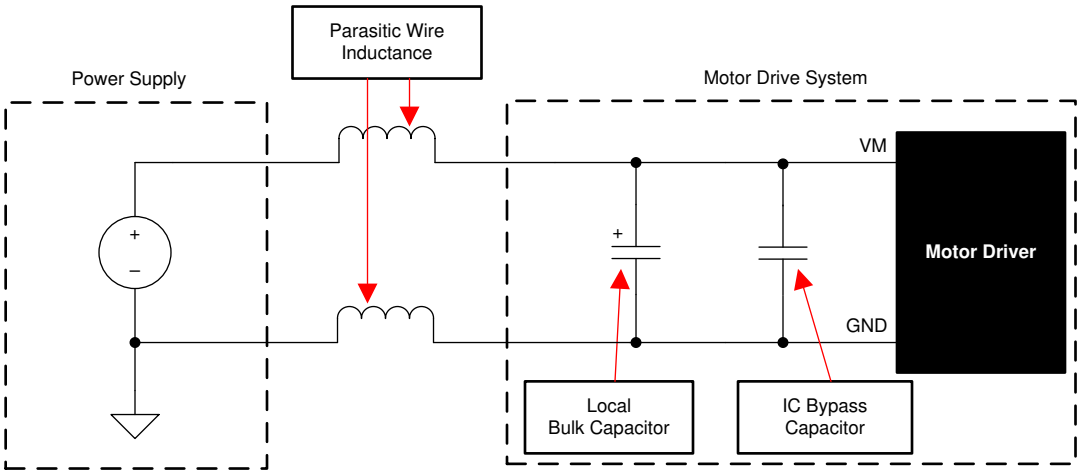


**Figure 9-1. Example Setup of Motor Drive System With External Power Supply**

The voltage rating for bulk capacitors should be higher than the operating voltage, to provide margin for cases when the motor transfers energy to the supply.


Copyright © 2023 Texas Instruments Incorporated

# 10 Layout

## 10.1 Layout Guidelines

The bulk capacitor should be placed to minimize the distance of the high-current path through the motor driver device. The connecting metal trace widths should be as wide as possible, and numerous vias should be used when connecting PCB layers. These practices minimize parasitic inductance and allow the bulk capacitor to deliver high current.

Small-value capacitors should be ceramic, and placed closely to device pins.

The high-current device outputs should use wide metal traces.

To reduce noise coupling and EMI interference from large transient currents into small-current signal paths, grounding should be partitioned between PGND and AGND. TI recommends connecting all non-power stage circuitry (including the thermal pad) to AGND to reduce parasitic effects and improve power dissipation from the device. Optionally, GND_BK can be split. Ensure grounds are connected through net-ties or wide resistors to reduce voltage offsets and maintain gate driver performance.

The device thermal pad should be soldered to the PCB top-layer ground plane. Multiple vias should be used to connect to a large bottom-layer ground plane. The use of large metal planes and multiple vias helps dissipate the $I^2 \times R_{DS(on)}$ heat that is generated in the device.

To improve thermal performance, maximize the ground area that is connected to the thermal pad ground across all possible layers of the PCB. Using thick copper pours can lower the junction-to-air thermal resistance and improve thermal dissipation from the die surface.

Separate the SW_BK and FB_BK traces with ground separation to reduce buck switching from coupling as noise into the buck outer feedback loop. Widen the FB_BK trace as much as possible to allow for faster load switching.

Figure 10-1 shows a layout example for the MCT8315A. Also, for layout example, refer to MCT8315A EVM.

Copyright © 2023 Texas Instruments Incorporated

## 10.2 Layout Example

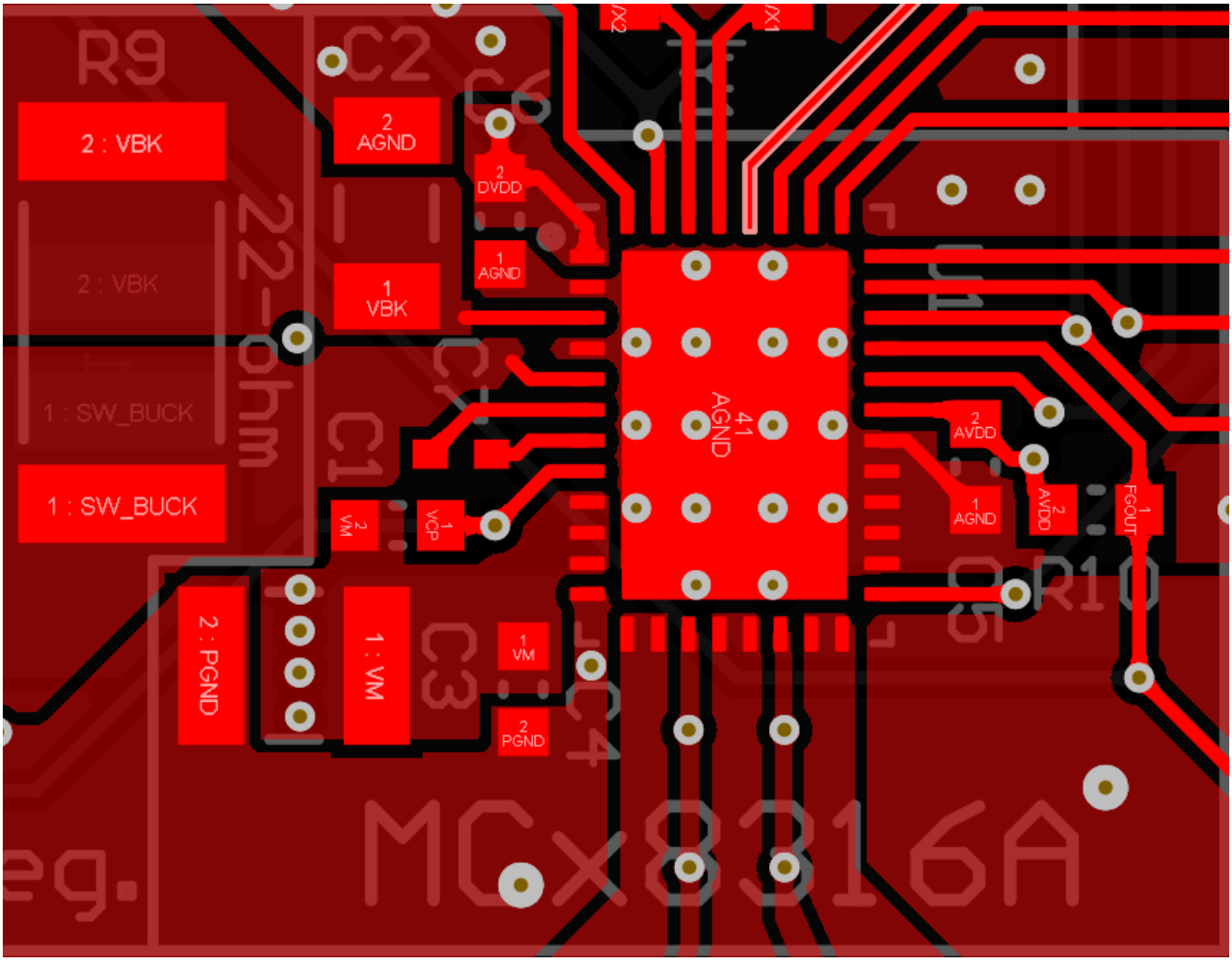


**Figure 10-1. Recommended Layout Example**


Copyright © 2023 Texas Instruments Incorporated

## 10.3 Thermal Considerations

The MCT8315A has thermal shutdown (TSD) as previously described. A die temperature in excess of 150°C (minimally) disables the device until the temperature drops to a safe level.

Any tendency of the device to enter thermal shutdown is an indication of excessive power dissipation, insufficient heatsinking, or too high an ambient temperature.

### 10.3.1 Power Dissipation

The power dissipated in the output FET resistance ($R_{DS(on)}$) dominates power dissipation in MCT8315A.

At start-up and fault conditions, the FET current is much higher than normal operating FET current; remember to take these peak currents and their duration into consideration.

The total device power dissipation is the power dissipated in each of the three half-bridges added together along with standby power, LDO and buck regulator losses.

The maximum amount of power that the device can dissipate depends on ambient temperature and heatsinking.

Note that $R_{DS(on)}$ increases with temperature, so as the device heats, the power dissipation increases. Take this into consideration when sizing the heatsink.

A summary of equations for calculating each loss is shown below in Table 10-1.

**Table 10-1. Power Losses for MCT8315A**

| Loss type | MCT8315A |
|---|---|
| **Standby power** | $P_{standby} = VM \times I_{VM_TA}$ |
| **LDO** | $P_{LDO} = (VM-V_{AVDD}) \times I_{AVDD}$, if BUCK_PS_DIS = 1b<br>$P_{LDO} = (V_{BK}-V_{AVDD}) \times I_{AVDD}$, if BUCK_PS_DIS = 0b |
| **FET conduction** | $P_{CON} = 2 \times (I_{RMS(trap)})^2 \times R_{ds,on(TA)}$ |
| **FET switching** | $P_{SW} = I_{PK(trap)} \times V_{PK(trap)} \times t_{rise/fall} \times f_{PWM}$ |
| **Diode** | $P_{diode} = I_{PK(trap)} \times V_{diode} \times t_{dead} \times f_{PWM}$ |
| **Demagnetization** | Without Active Demag: $3 \times I_{PK(trap)} \times V_{diode} \times t_{commutation} \times f_{motor_elec}$<br>With Active Demag: $3 \times (I_{RMS(trap)})^2 \times R_{ds,on(TA)} \times t_{commutation} \times f_{motor_elec}$ |
| **Buck** | $P_{BK} = 0.11 \times V_{BK} \times I_{BK}$ ($\eta_{BK}$ = 90%) |

Copyright © 2023 Texas Instruments Incorporated

# 11 Device and Documentation Support

## 11.1 Support Resources

TI E2E™ support forums are an engineer's go-to source for fast, verified answers and design help — straight from the experts. Search existing answers or ask your own question to get the quick design help you need.

Linked content is provided "AS IS" by the respective contributors. They do not constitute TI specifications and do not necessarily reflect TI's views; see TI's Terms of Use.

## 11.2 Trademarks

TI E2E™ is a trademark of Texas Instruments.
All trademarks are the property of their respective owners.

## 11.3 Electrostatic Discharge Caution

This integrated circuit can be damaged by ESD. Texas Instruments recommends that all integrated circuits be handled with appropriate precautions. Failure to observe proper handling and installation procedures can cause damage.

ESD damage can range from subtle performance degradation to complete device failure. Precision integrated circuits may be more susceptible to damage because very small parametric changes could cause the device not to meet its published specifications.

## 11.4 Glossary

TI Glossary This glossary lists and explains terms, acronyms, and definitions.

# 12 Mechanical, Packaging, and Orderable Information

The following pages include mechanical, packaging, and orderable information. This information is the most-current data available for the designated device. This data is subject to change without notice and without revision of this document. For browser-based versions of this data sheet, see the left-hand navigation pane.

## 12.1 Tape and Reel Information

REEL DIMENSIONS

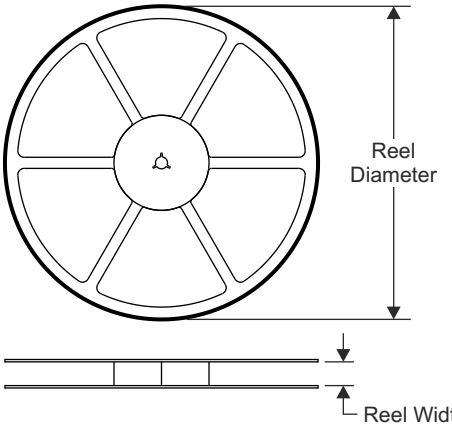


TAPE DIMENSIONS

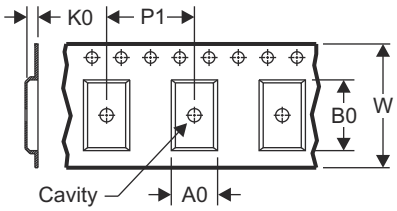


| | |
|---|---|
| A0 | Dimension designed to accommodate the component width |
| B0 | Dimension designed to accommodate the component length |
| K0 | Dimension designed to accommodate the component thickness |
| W | Overall width of the carrier tape |
| P1 | Pitch between successive cavity centers |

QUADRANT ASSIGNMENTS FOR PIN 1 ORIENTATION IN TAPE

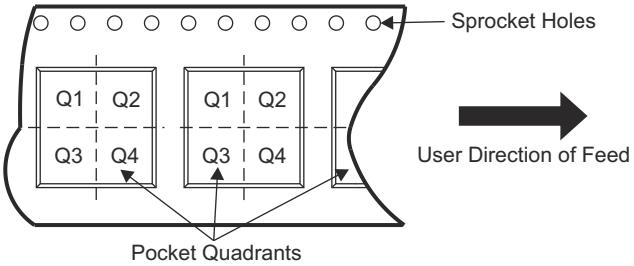



Copyright © 2023 Texas Instruments Incorporated

| Device | Package Type | Package Drawing | Pins | SPQ | Reel Diameter (mm) | Reel Width W1 (mm) | A0 (mm) | B0 (mm) | K0 (mm) | P1 (mm) | W (mm) | Pin1 Quadrant |
|---|---|---|---|---|---|---|---|---|---|---|---|---|
| MCT8315A1VRGFR | VQFN | RGF | 40 | 3000 | 330.0 | 16.4 | 5.25 | 7.25 | 1.45 | 8.0 | 16.0 | Q1 |

**TAPE AND REEL BOX DIMENSIONS**

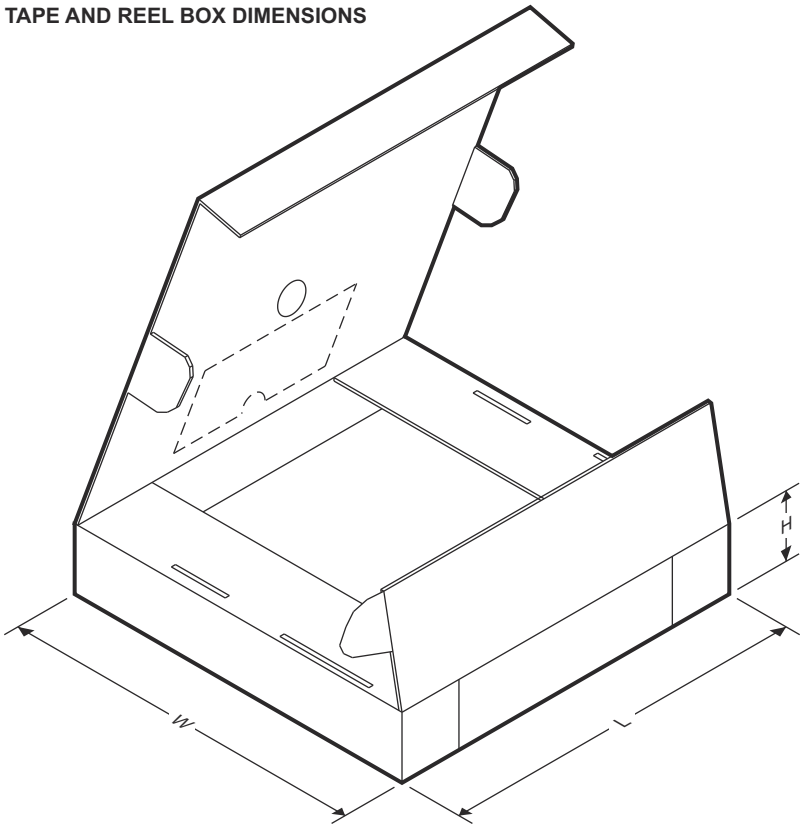


| Device | Package Type | Package Drawing | Pins | SPQ | Length (mm) | Width (mm) | Height (mm) |
|---|---|---|---|---|---|---|---|
| MCT8315A1VRGFR | VQFN | RGF | 40 | 3000 | 367.0 | 367.0 | 38.0 |

## PACKAGING INFORMATION

| Orderable part number | Status (1) | Material type (2) | Package \| Pins | Package qty \| Carrier | RoHS (3) | Lead finish/ Ball material (4) | MSL rating/ Peak reflow (5) | Op temp (°C) | Part marking (6) |
|---|---|---|---|---|---|---|---|---|---|
| MCT8315A1VRGFR | Active | Production | VQFN (RGF) \| 40 | 3000 \| LARGE T&R | Yes | NIPDAU | Level-2-260C-1 YEAR | -40 to 125 | MCT83 15A1V |
| MCT8315A1VRGFR.A | Active | Production | VQFN (RGF) \| 40 | 3000 \| LARGE T&R | Yes | NIPDAU | Level-2-260C-1 YEAR | -40 to 125 | MCT83 15A1V |
| MCT8315A1VRGFR.B | Active | Production | VQFN (RGF) \| 40 | 3000 \| LARGE T&R | Yes | NIPDAU | Level-2-260C-1 YEAR | -40 to 125 | MCT83 15A1V |

(1) **Status:** For more details on status, see our product life cycle.

(2) **Material type:** When designated, preproduction parts are prototypes/experimental devices, and are not yet approved or released for full production. Testing and final process, including without limitation quality assurance, reliability performance testing, and/or process qualification, may not yet be complete, and this item is subject to further changes or possible discontinuation. If available for ordering, purchases will be subject to an additional waiver at checkout, and are intended for early internal evaluation purposes only. These items are sold without warranties of any kind.

(3) **RoHS values:** Yes, No, RoHS Exempt. See the TI RoHS Statement for additional information and value definition.

(4) **Lead finish/Ball material:** Parts may have multiple material finish options. Finish options are separated by a vertical ruled line. Lead finish/Ball material values may wrap to two lines if the finish value exceeds the maximum column width.

(5) **MSL rating/Peak reflow:** The moisture sensitivity level ratings and peak solder (reflow) temperatures. In the event that a part has multiple moisture sensitivity ratings, only the lowest level per JEDEC standards is shown. Refer to the shipping label for the actual reflow temperature that will be used to mount the part to the printed circuit board.

(6) **Part marking:** There may be an additional marking, which relates to the logo, the lot trace code information, or the environmental category of the part.

Multiple part markings will be inside parentheses. Only one part marking contained in parentheses and separated by a "~" will appear on a part. If a line is indented then it is a continuation of the previous line and the two combined represent the entire part marking for that device.

**Important Information and Disclaimer:**The information provided on this page represents TI's knowledge and belief as of the date that it is provided. TI bases its knowledge and belief on information provided by third parties, and makes no representation or warranty as to the accuracy of such information. Efforts are underway to better integrate information from third parties. TI has taken and continues to take reasonable steps to provide representative and accurate information but may not have conducted destructive testing or chemical analysis on incoming materials and chemicals. TI and TI suppliers consider certain information to be proprietary, and thus CAS numbers and other limited information may not be available for release.

In no event shall TI's liability arising out of such information exceed the total purchase price of the TI part(s) at issue in this document sold by TI to Customer on an annual basis.

## TAPE AND REEL INFORMATION

**REEL DIMENSIONS**

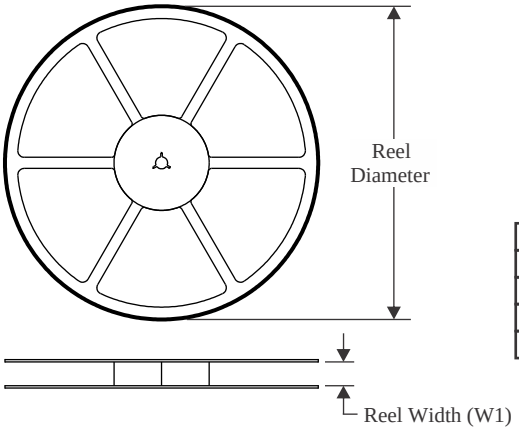


**TAPE DIMENSIONS**

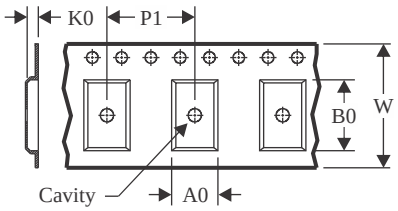


| | |
|---|---|
| A0 | Dimension designed to accommodate the component width |
| B0 | Dimension designed to accommodate the component length |
| K0 | Dimension designed to accommodate the component thickness |
| W | Overall width of the carrier tape |
| P1 | Pitch between successive cavity centers |

**QUADRANT ASSIGNMENTS FOR PIN 1 ORIENTATION IN TAPE**

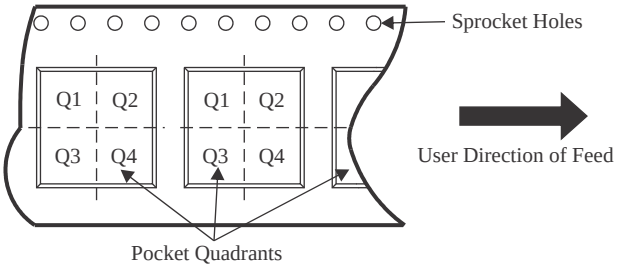


*All dimensions are nominal

| Device | Package Type | Package Drawing | Pins | SPQ | Reel Diameter (mm) | Reel Width W1 (mm) | A0 (mm) | B0 (mm) | K0 (mm) | P1 (mm) | W (mm) | Pin1 Quadrant |
|---|---|---|---|---|---|---|---|---|---|---|---|---|
| MCT8315A1VRGFR | VQFN | RGF | 40 | 3000 | 330.0 | 16.4 | 5.25 | 7.25 | 1.45 | 8.0 | 16.0 | Q1 |

TAPE AND REEL BOX DIMENSIONS

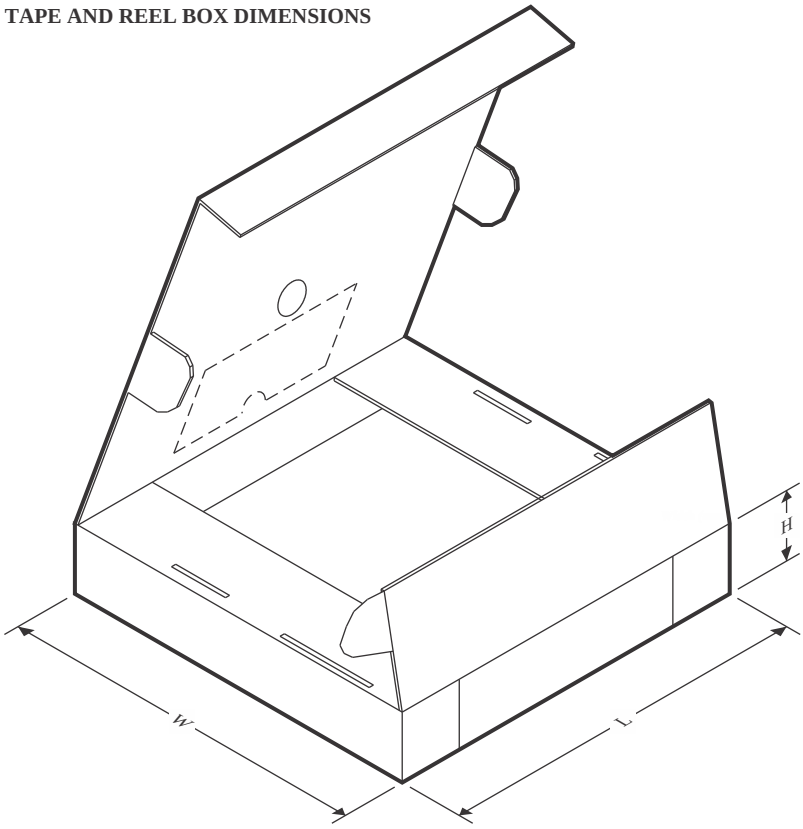


*All dimensions are nominal

| Device | Package Type | Package Drawing | Pins | SPQ | Length (mm) | Width (mm) | Height (mm) |
|---|---|---|---|---|---|---|---|
| MCT8315A1VRGFR | VQFN | RGF | 40 | 3000 | 367.0 | 367.0 | 35.0 |

# GENERIC PACKAGE VIEW

## RGF 40

## VQFN - 1 mm max height

**5 x 7, 0.5 mm pitch**

PLASTIC QUAD FLAT PACK- NO LEAD

This image is a representation of the package family, actual package may vary.
Refer to the product data sheet for package details.

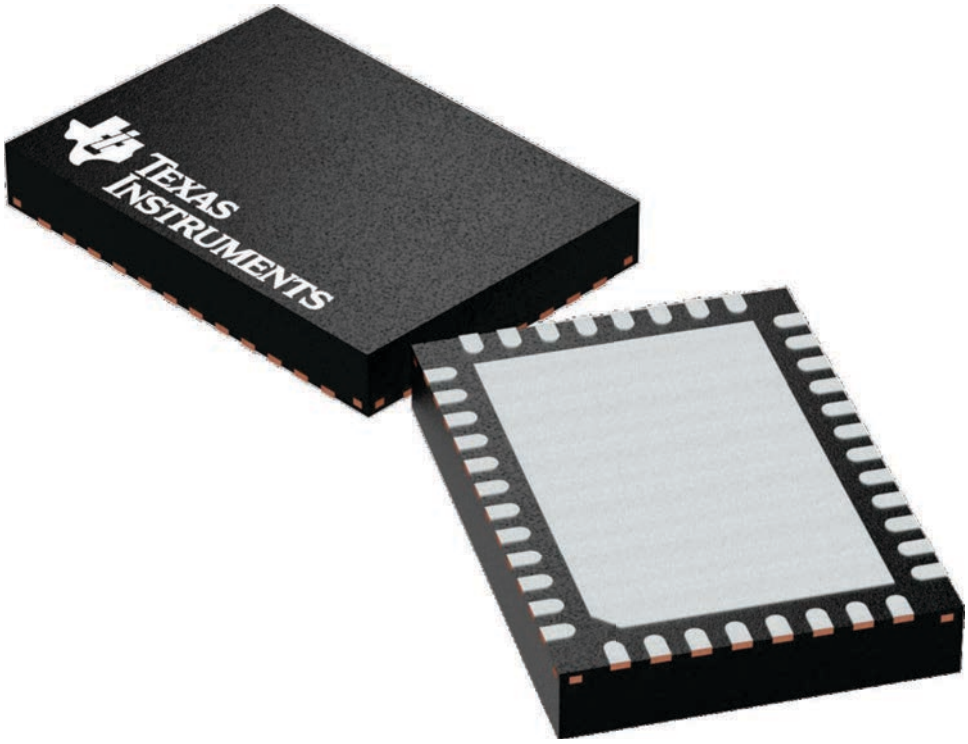


4225115/A

PLASTIC QUAD FLAT PACK- NO LEAD

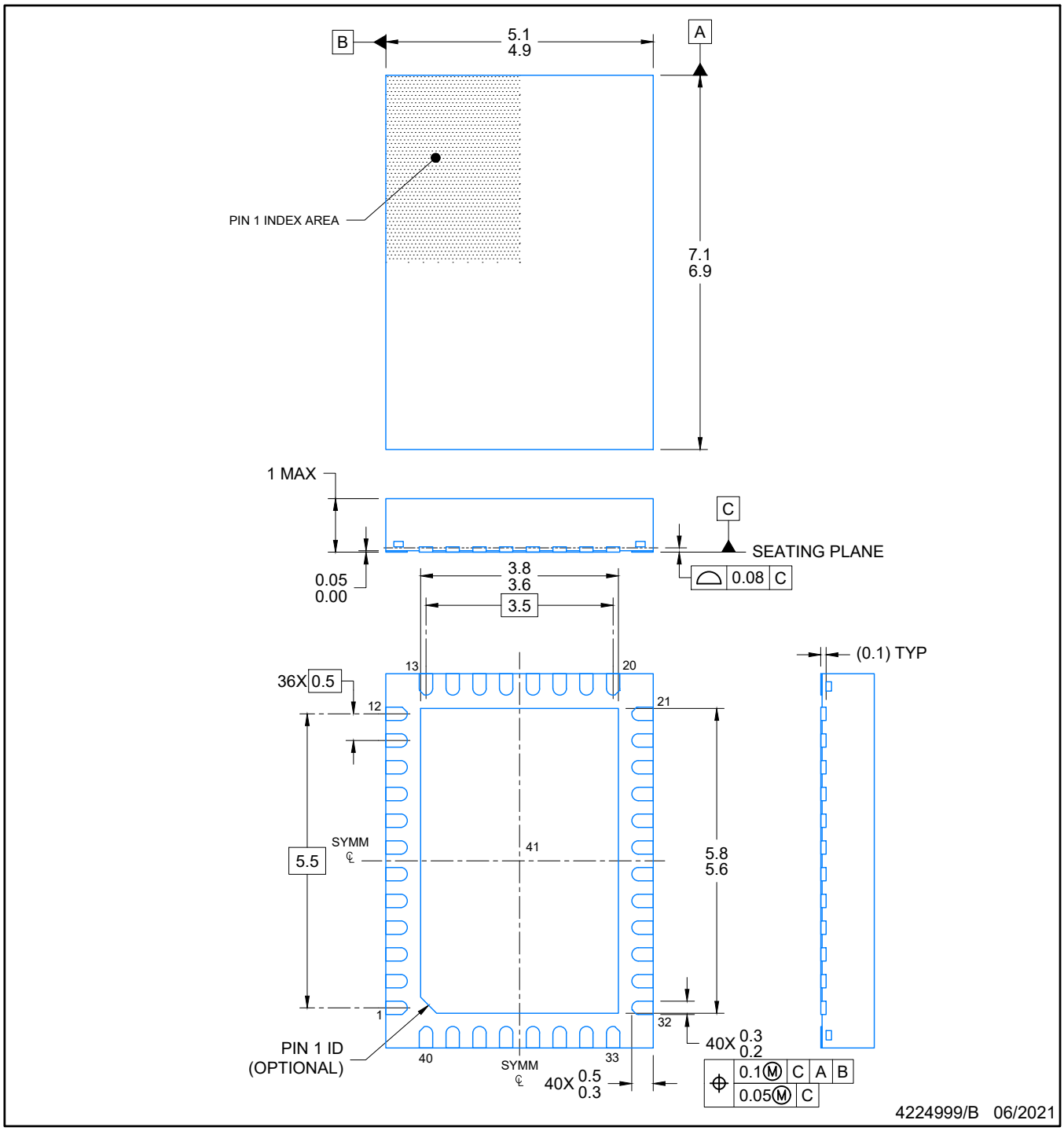


NOTES:

1. All linear dimensions are in millimeters. Any dimensions in parenthesis are for reference only. Dimensioning and tolerancing per ASME Y14.5M.
2. This drawing is subject to change without notice.
3. The package thermal pad must be soldered to the printed circuit board for optimal thermal and mechanical performance.

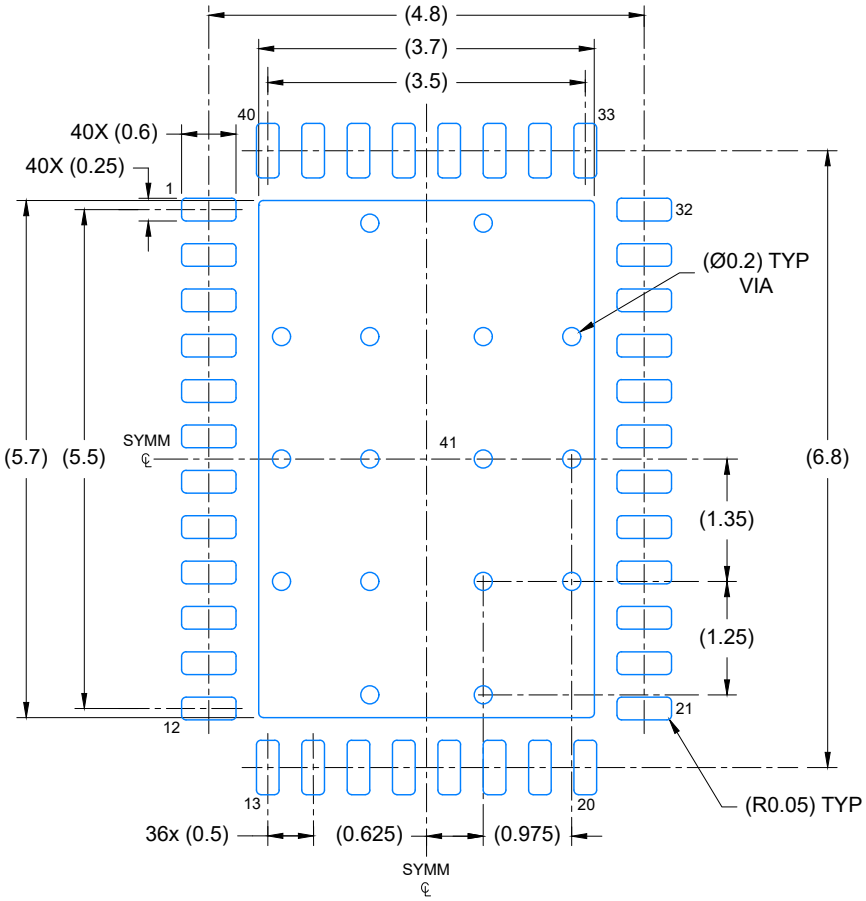


LAND PATTERN EXAMPLE
EXPOSED METAL SHOWN
SCALE: 12X

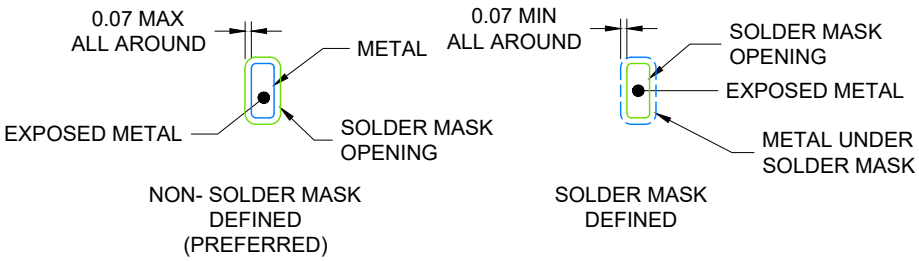


SOLDER MASK DETAILS

4224999/B 06/2021

NOTES: (continued)

4. This package is designed to be soldered to a thermal pad on the board. For more information, see Texas Instruments literature number SLUA271 (www.ti.com/lit/slua271).
5. Vias are optional depending on application, refer to device data sheet. If any vias are implemented, refer to their locations shown on this view. It is recommended that vias under paste be filled, plugged or tented.

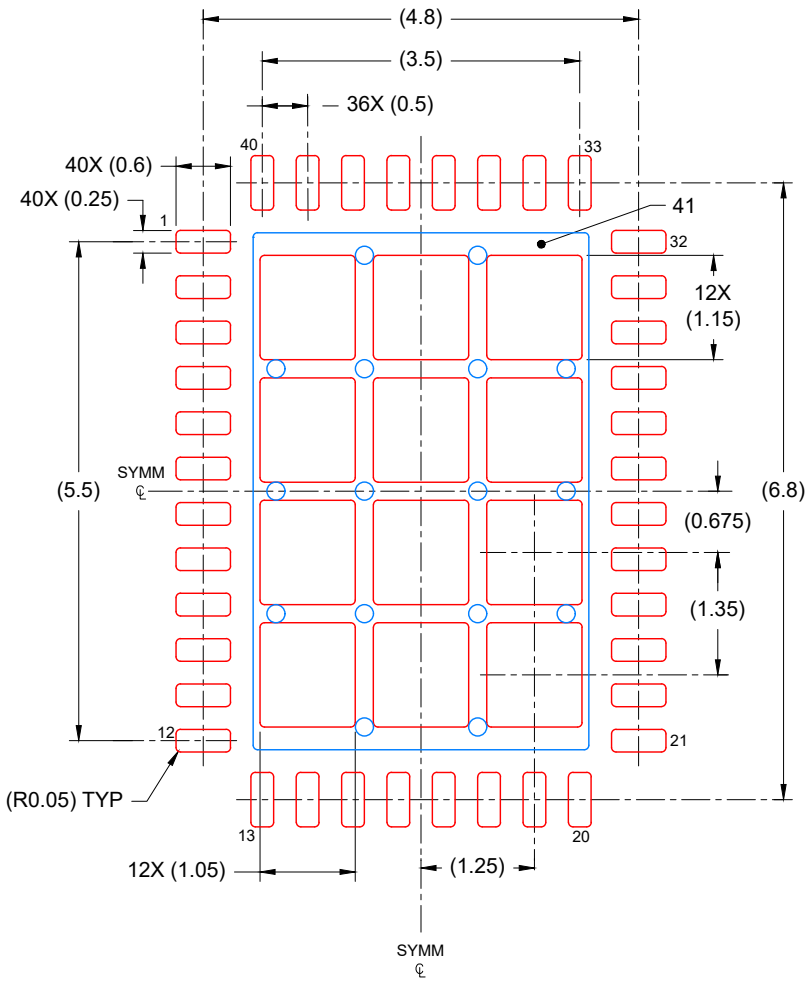


SOLDER PASTE EXAMPLE
BASED ON 0.125 mm THICK STENCIL

EXPOSED PAD
69% PRINTED COVERAGE BY AREA
SCALE: 12X

4224999/B 06/2021

NOTES: (continued)

6. Laser cutting apertures with trapezoidal walls and rounded corners may offer better paste release. IPC-7525 may have alternate design recommendations.

# IMPORTANT NOTICE AND DISCLAIMER

TI PROVIDES TECHNICAL AND RELIABILITY DATA (INCLUDING DATA SHEETS), DESIGN RESOURCES (INCLUDING REFERENCE DESIGNS), APPLICATION OR OTHER DESIGN ADVICE, WEB TOOLS, SAFETY INFORMATION, AND OTHER RESOURCES “AS IS” AND WITH ALL FAULTS, AND DISCLAIMS ALL WARRANTIES, EXPRESS AND IMPLIED, INCLUDING WITHOUT LIMITATION ANY IMPLIED WARRANTIES OF MERCHANTABILITY, FITNESS FOR A PARTICULAR PURPOSE OR NON-INFRINGEMENT OF THIRD PARTY INTELLECTUAL PROPERTY RIGHTS.

These resources are intended for skilled developers designing with TI products. You are solely responsible for (1) selecting the appropriate TI products for your application, (2) designing, validating and testing your application, and (3) ensuring your application meets applicable standards, and any other safety, security, regulatory or other requirements.

These resources are subject to change without notice. TI grants you permission to use these resources only for development of an application that uses the TI products described in the resource. Other reproduction and display of these resources is prohibited. No license is granted to any other TI intellectual property right or to any third party intellectual property right. TI disclaims responsibility for, and you will fully indemnify TI and its representatives against, any claims, damages, costs, losses, and liabilities arising out of your use of these resources.

TI’s products are provided subject to TI’s Terms of Sale or other applicable terms available either on ti.com or provided in conjunction with such TI products. TI’s provision of these resources does not expand or otherwise alter TI’s applicable warranties or warranty disclaimers for TI products.

TI objects to and rejects any additional or different terms you may have proposed.

Mailing Address: Texas Instruments, Post Office Box 655303, Dallas, Texas 75265
Copyright © 2025, Texas Instruments Incorporated