TMUX611x ±17V, Low-capacitance, Low-leakage-current, Precision, Quad SPST Switches

1 Features

- Wide supply range: ±5V to ±17V (dual), 10V to 17V (single)
- Latch-up performance meets 100mA per JESD78 Class II Level A on all pins
- Low on-capacitance: 4.2pF
- Low input leakage: 5pA
- Low charge injection: 0.6pC
- Rail-to-rail operation
- Low on-resistance: 120Ω
- Fast switch turn-on time: 66ns
- Break-before-make switching (TMUX6113)
- EN pin connectable to V_{DD}
- Low supply current: 17µA
- Human Body Model (HBM) ESD protection: ± 2kV on all pins
- Industry-standard TSSOP and smaller WQFN packages

2 Applications

- Factory automation and industrial process controls
- Programmable logic controllers (PLC)
- Analog input modules
- Semiconductor test equipment
- Battery test equipment

3 Description

The TMUX6111, TMUX6112, and TMUX6113 devices are modern complementary metal-oxide semiconductor (CMOS) devices that have four independently selectable single-pole/ single-throw (SPST) switches. The devices work well with dual supplies (±5V to ±17V), a single supply (10V to 17V), or asymmetric supplies. All digital inputs have transistor-transistor logic (TTL) compatible thresholds, ensuring TTL/ CMOS logic compatibility.

The switches are turned on with Logic 0 on the digital control inputs in the TMUX6111. Logic 1 is required to turn on switches in the TMUX6112. The TMUX6113 has two switches with similar digital control logic to the TMUX6111 while the logic is inverted on the other two switches. The TMUX6113 exhibits break-before-make switching, allowing the device to be used in the cross-point switching application.

The TMUX611x devices are part of Texas Instruments Precision Switches and Multiplexers family. The devices have very low leakage current and charge injection, allowing them to be used in high-precision measurement applications. Low supply current of 17µA enables the device usage in portable applications.

Package Information

PART NUMBER(1)	PACKAGE(2)	BODY SIZE
TMUX6111 TMUX6112 TMUX6113	(TSSOP, 16)	5.00mm x 4.40mm
	(WQFN, 16)	3.00mm x 3.00mm

(1) See Section 4
(2) For more information, see Section 12

An IMPORTANT NOTICE at the end of this data sheet addresses availability, warranty, changes, use in safety-critical applications, intellectual property matters and other important disclaimers. PRODUCTION DATA.

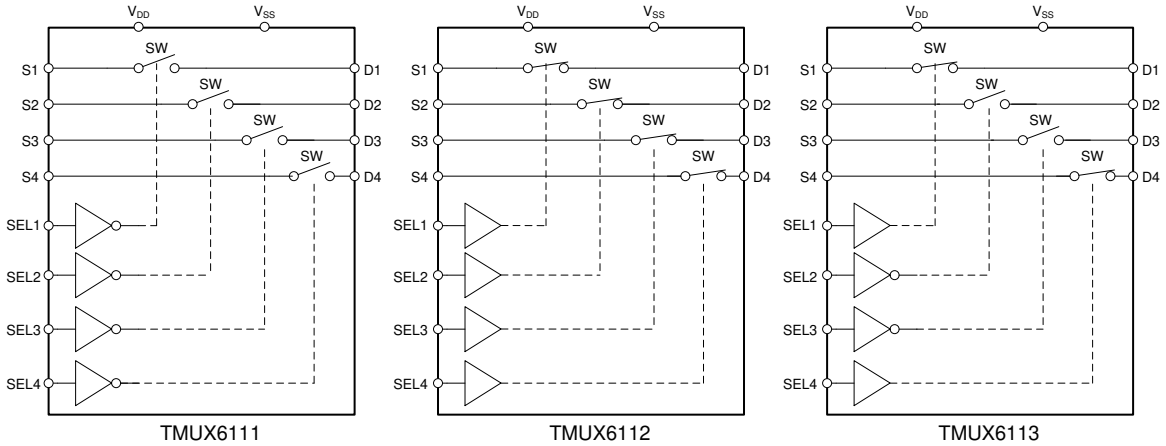

Simplified Schematic

Copyright © 2025 Texas Instruments Incorporated

Table of Contents

1 Features....1
2 Applications....1
3 Description....1
4 Device Comparison Table....4
5 Pin Configuration and Functions....4
6 Specifications....5
6.1 Absolute Maximum Ratings....5
6.2 ESD Ratings....5
6.3 Thermal Information....5
6.4 Recommended Operating Conditions....5
6.5 Electrical Characteristics (Dual Supplies: ±15V)....6
6.6 Switching Characteristics (Dual Supplies: ±15V)....7
6.7 Electrical Characteristics (Single Supply: 12V)....8
6.8 Switching Characteristics (Single Supply: 12V)....9
6.9 Typical Characteristics....10
7 Parameter Measurement Information....13
7.1 Truth Tables....13
8 Detailed Description....14
8.1 Overview....14
8.2 Functional Block Diagram....19
8.3 Feature Description....19
8.4 Device Functional Modes....20
9 Application and Implementation....21
9.1 Application Information....21
9.2 Typical Application....21
9.3 Power Supply Recommendations....23
9.4 Layout....23
10 Device and Documentation Support....24
10.1 Documentation Support....24
10.2 Receiving Notification of Documentation Updates....24
10.3 Support Resources....24
10.4 Trademarks....24
10.5 Electrostatic Discharge Caution....24
10.6 Glossary....24
11 Revision History....25
12 Mechanical, Packaging, and Orderable Information....25

4 Device Comparison Table

PRODUCT	DESCRIPTION
TMUX6111	±17V, Low-Capacitance, Low-Leakage-Current, Precision, Quad SPST Switches (Normally Closed)
TMUX6112	±17V, Low-Capacitance, Low-Leakage-Current, Precision, Quad SPST Switches (Normally Open)
TMUX6113	±17V, Low-Capacitance, Low-Leakage-Current, Precision, Quad SPST Switches (Dual Open + Dual Closed)

5 Pin Configuration and Functions

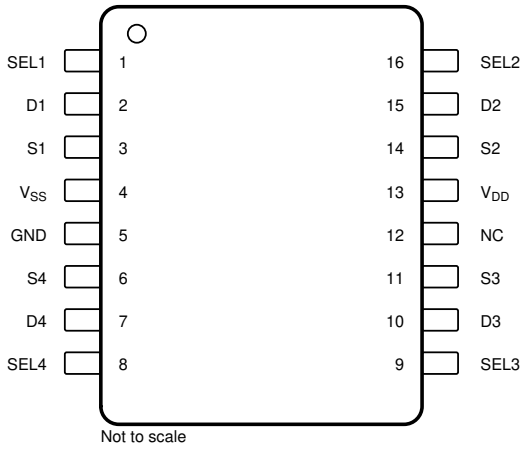

Figure 5-1. PW Package, 16-Pin TSSOP (Top View)

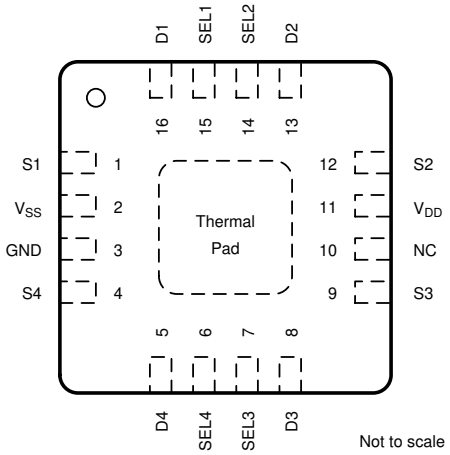

Figure 5-2. RTE Package, 16-Pin WQFN (Top View)

Table 5-1. Pin Functions

PIN			TYPE[(1)]	DESCRIPTION
NAME	TSSOP	WQFN		
SEL1	1	15	I	Logic control input 1.
D1	2	16	I/O	Drain pin 1. Can be an input or output.
S1	3	1	I/O	Source pin 1. Can be an input or output.
V_{SS}	4	2	P	Negative power supply. This pin is the most negative power-supply potential. In single-supply applications, this pin can be connected to ground. For reliable operation, connect a decoupling capacitor ranging from 0.1µF to 10µF between V_{SS} and GND.
GND	5	3	P	Ground (0V) reference
S4	6	4	I/O	Source pin 4. Can be an input or output.
D4	7	5	I/O	Drain pin 4. Can be an input or output.
SEL4	8	6	I	Logic control input 4.
SEL3	9	7	I	Logic control input 3.
D3	10	8	I/O	Drain pin 3. Can be an input or output.
S3	11	9	I/O	Source pin 3. Can be an input or output.
NC	12	10	–	No internal connection.
V_{DD}	13	11	P	Positive power supply. This pin is the most positive power-supply potential. For reliable operation, connect a decoupling capacitor ranging from 0.1µF to 10µF between V_{DD} and GND.
S2	14	12	I/O	Source pin 2. Can be an input or output.
D2	15	13	I/O	Drain pin 2. Can be an input or output.
SEL2	16	14	I	Logic control input 2.
–	-	EP	–	Exposed Pad. The exposed pad is electrically connected to V_{SS} internally. Connect EP to V_{SS} to achieve rated thermal and ESD performance.

(1) I = input, O = output, I/O = input and output, P = power

Copyright © 2025 Texas Instruments Incorporated

6 Specifications

6.1 Absolute Maximum Ratings

Over operating free-air temperature range (unless otherwise noted).[1]

		MIN	MAX	UNIT
V_{DD} to V_{SS}	Supply voltage		36	V
V_{DD} to GND		–0.3	18	V
V_{SS} to GND		–18	0.3	V
V_{DIG}	Digital input pin (SEL1, SEL2, SEL3, SEL4) voltage	GND –0.3	V_{DD}+0.3	V
I_{DIG}	Digital input pin (SEL1, SEL2, SEL3, SEL4) current	–30	30	mA
V_{ANA_IN}	Analog input pin (Sx) voltage	V_{SS}–0.3	V_{DD}+0.3	V
I_{ANA_IN}	Analog input pin (Sx) current	–30	30	mA
V_{ANA_OUT}	Analog output pin (D) voltage	V_{SS}–0.3	V_{DD}+0.3	V
I_{ANA_OUT}	Analog output pin (D) current	–30	30	mA
T_A	Ambient temperature	–55	140	°C
T_J	Junction temperature		150	°C
T_{stg}	Storage temperature	–65	150	°C

(1) Stresses beyond those listed under *Absolute Maximum Rating* may cause permanent damage to the device. These are stress ratings only, which do not imply functional operation of the device at these or any other conditions beyond those indicated under *Recommended Operating Condition*. Exposure to absolute-maximum-rated conditions for extended periods may affect device reliability.

6.2 ESD Ratings

			VALUE	UNIT
$V_{(ESD)}$	Electrostatic discharge	Human body model (HBM), per ANSI/ESDA/JEDEC JS-001, all pins[1]	±2000	V
		Charged device model (CDM), per JEDEC specification JESD22-C101, all pins[2]	±500	

(1) JEDEC document JEP155 states that 500V HBM allows safe manufacturing with a standard ESD control process.
(2) JEDEC document JEP157 states that 250V CDM allows safe manufacturing with a standard ESD control process.

6.3 Thermal Information

THERMAL METRIC[1]		TMUX6111/ TMUX6112/ TMUX6113		UNIT
		PW (TSSOP)	RTE (QFN)	
		16 PINS	16 PINS	
$R_{\theta JA}$	Junction-to-ambient thermal resistance	111.0	51.9	°C/W
$R_{\theta JC(top)}$	Junction-to-case (top) thermal resistance	41.7	53.3	°C/W
$R_{\theta JB}$	Junction-to-board thermal resistance	57.2	26.6	°C/W
Ψ_{JT}	Junction-to-top characterization parameter	4.1	1.7	°C/W
Ψ_{JB}	Junction-to-board characterization parameter	56.6	26.6	°C/W
$R_{\theta JC(bot)}$	Junction-to-case (bottom) thermal resistance	N/A	11.6	°C/W

(1) For more information about traditional and new thermal metrics, see the Semiconductor and IC Package Thermal Metrics application report.

6.4 Recommended Operating Conditions

Over operating free-air temperature range (unless otherwise noted).

		MIN	NOM	MAX	UNIT
V_{DD} to V_{SS} [1]	Power supply voltage differential	10		34	V
V_{DD} to GND	Positive power supply voltage (singlle supply, V_{SS} = 0V)	10		17	V

Copyright © 2025 Texas Instruments Incorporated

Over operating free-air temperature range (unless otherwise noted).

		MIN	NOM	MAX	UNIT
V_{DD} to GND	Positive power supply voltage (dual supply)	5		17	V
V_{SS} to GND	Negative power supply voltage (dual supply)	–5		–17	V
V_S (2)	Source pins voltage	V_{SS}		V_{DD}	V
V_D	Drain pin voltage	V_{SS}		V_{DD}	V
V_{DIG}	Digital input pin (SEL1, SEL2, SEL3, SEL4) voltage	0		V_{DD}	V
I_{CH}	Channel current (T_A = 25°C)	–25		25	mA
T_A	Ambient temperature	–40		125	°C

(1) V_{DD} and V_{SS} can be any value as long as 10V ≤ (V_{DD} – V_{SS}) ≤ 34V.
(2) V_S is the voltage on all the S pins.

6.5 Electrical Characteristics (Dual Supplies: ±15V)

At T_A = 25°C, V_{DD} = 15V, and V_{SS} = -15V (unless otherwise noted).

PARAMETER		TEST CONDITIONS		MIN	TYP	MAX	UNIT
ANALOG SWITCH							
V_A	Analog signal range		T_A = –40°C to +125°C	V_{SS}		V_{DD}	V
R_{ON}	On-resistance	V_S = 0V, I_S = 1mA			120	135	Ω
		V_S = ±10V, I_S = 1mA			140	160	Ω
			T_A = –40°C to +85°C			210	Ω
			T_A = –40°C to +125°C			245	Ω
ΔR_{ON}	On-resistance mismatch between channels	V_S = ±10V, I_S = 1mA			2.5	6	Ω
			T_A = –40°C to +85°C			9	Ω
			T_A = –40°C to +125°C			11	Ω
R_{ON_FLAT}	On-resistance flatness	V_S = –10V, 0V, +10V, I_S = 1mA			23	33	Ω
			T_A = –40°C to +85°C			37	Ω
			T_A = –40°C to +125°C			38	Ω
R_{ON_DRIFT}	On-resistance drift	V_S = 0V			0.52		%/°C
$I_{S(OFF)}$	Source off leakage current(1)	Switch state is off, V_S = +10V/ –10V, V_D = –10V/ + 10V		–0.02	0.005	0.02	nA
			T_A = –40°C to +85°C	-0.14		0.05	nA
			T_A = –40°C to +125°C	–1.3		0.25	nA
$I_{D(OFF)}$	Drain off leakage current(1)	Switch state is off, V_S = +10V/ –10V, V_D = –10V/ +10V		–0.02	0.005	0.02	nA
			T_A = –40°C to +85°C	–0.14		0.05	nA
			T_A = –40°C to +125°C	–1.3		0.25	nA
$I_{D(ON)}$	Drain on leakage current	Switch state is on, V_S = +10V/ –10V, V_D = –10V/ +10V		–0.04	0.01	0.04	nA
			T_A = –40°C to +85°C	–0.25		0.1	nA
			T_A = –40°C to +125°C	–1.8		0.5	nA
DIGITAL INPUT (SELx pins)							
V_{IH}	Logic voltage high			2			V
V_{IL}	Logic voltage low					0.8	V
$R_{PD(IN)}$	Pull-down resistance on SELx pins				6		MΩ
POWER SUPPLY							
I_{DD}	V_{DD} supply current	V_A = 0V or 3.3V, V_S = 0V			17	21	µA
			T_A = –40°C to +85°C			22	µA
			T_A = –40°C to +125°C			23	µA

Copyright © 2025 Texas Instruments Incorporated

At T_A = 25°C, V_{DD} = 15V, and V_{SS} = -15V (unless otherwise noted).

PARAMETER		TEST CONDITIONS		MIN	TYP	MAX	UNIT
I_{SS}	V_{SS} supply current	V_A = 0V or 3.3V, V_S = 0V			8	10	µA
			T_A = –40°C to +85°C			11	µA
			T_A = –40°C to +125°C			12	µA

(1) When V_S is positive, V_D is negative, and vice versa.

6.6 Switching Characteristics (Dual Supplies: ±15V)

At T_A = 25°C, V_{DD} = 15V, and V_{SS} = -15V (unless otherwise noted).

PARAMETER		TEST CONDITIONS	MIN	TYP	MAX	UNIT
t_{ON}	Enable turn-on time	V_S = ±10V, R_L = 300Ω , C_L = 35pF		66	78	ns
		V_S = ±10V, R_L = 300Ω , C_L = 35pF, T_A = –40°C to +85°C			107	ns
		V_S = ±10V, R_L = 300Ω , C_L = 35pF, T_A = –40°C to +125°C			117	ns
t_{OFF}	Enable turn-off time	V_S = ±10V, R_L = 300Ω , C_L = 35pF		56	68	ns
		V_S = ±10V, R_L = 300Ω , C_L = 35pF, T_A = –40°C to +85°C			77	ns
		V_S = ±10V, R_L = 300Ω , C_L = 35pF, T_A = –40°C to +125°C			81	ns
tBBM	Break-before-make time delay (TMUX6113 Only)	V_S = 10V, R_L = 300Ω , C_L = 35pF, T_A = –40°C to +125°C	8	40		ns
Q_J	Charge injection	V_S = 0V, R_S = 0Ω , C_L = 1nF		0.6		pC
O_{ISO}	Off-isolation	R_L = 50Ω , C_L = 5pF, f = 1MHz		–85		dB
X_{TALK}	Channel-to-channel crosstalk	R_L = 50Ω , C_L = 5pF, f = 1MHz, adjacent channel		–100		dB
		R_L = 50Ω , C_L = 5pF, f = 1MHz, non-adjacentchannel		–115		dB
I_L	Insertion loss	R_L = 50Ω , C_L = 5pF, f = 1MHz		–7.0		dB
ACPSRR	AC Power Supply Rejection Ratio	R_L = 10kΩ , C_L = 5pF, V_{PP}= 0.62V on V_{DD}, f= 1MHz		–59		dB
		R_L = 10kΩ , C_L = 5pF, V_{PP}= 0.62V on V_{SS}, f= 1MHz		–59		dB
BW	-3dB Bandwidth	R_L = 50Ω , C_L = 5pF		800		MHz
THD	Total harmonic distortion + noise	R_L = 10kΩ , C_L = 5pF, f= 20Hz to 20kHz		0.08		%
C_{IN}	Digital input capacitance	V_{IN} = 0V or V_{DD}		1.5		pF
$C_{S(OFF)}$	Source off-capacitance	V_S = 0V, f = 1MHz (PW package)		1.9	3.0	pF
		V_S = 0V, f = 1MHz (RTE package)		2.5	3.6	pF
$C_{D(OFF)}$	Drain off-capacitance	V_S = 0V, f = 1MHz		2.4	3.1	pF
$C_{S(ON)}$, $C_{D(ON)}$	Source and drain on-capacitance	V_S = 0V, f = 1MHz		4.2	6.0	pF

Copyright © 2025 Texas Instruments Incorporated

6.7 Electrical Characteristics (Single Supply: 12V)

At T_A = 25°C, V_{DD} = 12V, and V_{SS} = 0V (unless otherwise noted).

PARAMETER		TEST CONDITIONS		MIN	TYP	MAX	UNIT
ANALOG SWITCH							
V_A	Analog signal range	T_A = –40°C to +125°C		V_{SS}		V_{DD}	V
R_{ON}	On-resistance	V_S = 10V, I_S = 1mA			230	265	Ω
			T_A = –40°C to +85°C			355	Ω
			T_A = –40°C to +125°C			405	Ω
ΔR_{ON}	On-resistance mismatch between channels	V_S = 10V, I_S = 1mA			5	12	Ω
			T_A = –40°C to +85°C			19	Ω
			T_A = –40°C to +125°C			23	Ω
R_{ON_DRIFT}	On-resistance drift	V_S = 0V			0.5		%/°C
$I_{S(OFF)}$	Source off leakage current(1)	Switch state is off, V_S = 10V/ 1V, V_D = 1V/ 10V		–0.02	0.005	0.02	nA
			T_A = –40°C to +85°C	–0.1		0.04	nA
			T_A = –40°C to +125°C	-1		0.2	nA
$I_{D(OFF)}$	Drain off leakage current(1)	Switch state is off, V_S = 10V/ 1V, V_D = 1V/ 10V		–0.02	0.005	0.02	nA
			T_A = –40°C to +85°C	–0.1		0.04	nA
			T_A = –40°C to +125°C	–1		0.2	nA
$I_{D(ON)}$	Drain on leakage current	Switch state is on, V_S = floating, V_D = 1V/ 10V		–0.04	0.01	0.04	nA
			T_A = –40°C to +85°C	–0.16		0.08	nA
			T_A = –40°C to +125°C	–1.4		0.4	nA
DIGITAL INPUT (SELx pins)							
V_{IH}	Logic voltage high			2			V
V_{IL}	Logic voltage low					0.8	V
$R_{PD(EN)}$	Pull-down resistance on SELx pins				6		MΩ
POWER SUPPLY							
I_{DD}	V_{DD} supply current	V_A = 0V or 3.3V, V_S = 0V			13	16	µA
			T_A = –40°C to +85°C			17	µA
			T_A = –40°C to +125°C			18	µA

(1) When V_S is positive, V_D is negative, and vice versa.

Copyright © 2025 Texas Instruments Incorporated

6.8 Switching Characteristics (Single Supply: 12V)

At T_A = 25°C, V_{DD} = 12V, and V_{SS} = 0V (unless otherwise noted).

PARAMETER		TEST CONDITIONS	MIN	TYP	MAX	UNIT
t_{ON}	Enable turn-on time	V_S = 8V, R_L = 300Ω , C_L = 35pF		72	84	ns
		V_S = 8V, R_L = 300Ω , C_L = 35pF, T_A = –40°C to +85°C			117	ns
		V_S = 8V, R_L = 300Ω , C_L = 35pF, T_A = –40°C to +125°C			128	ns
t_{OFF}	Enable turn-off time	V_S = 8V, R_L = 300Ω , C_L = 35pF		57	66	ns
		V_S = 8V, R_L = 300Ω , C_L = 35pF, T_A = –40°C to +85°C			78	ns
		V_S = 8V, R_L = 300Ω , C_L = 35pF, T_A = –40°C to +125°C			84	ns
t_{BBM}	Break-before-make time delay (TMUX6113 only)	V_S = 8V, R_L = 300Ω , C_L = 35pF, T_A = –40°C to +125°C	17	47		ns
Q_J	Charge injection	V_S = 0V to 12V, R_S = 0Ω , C_L = 1nF		0.6		pC
O_{ISO}	Off-isolation	R_L = 50Ω , C_L = 5pF, f = 1MHz		–86		dB
X_{TALK}	Channel-to-channel crosstalk	R_L = 50Ω , C_L = 5pF, f = 1MHz, adjacent channel		–98		dB
		R_L = 50Ω , C_L = 5pF, f = 1MHz, non-adjacent channel		–117		dB
I_L	Insertion loss	R_L = 50Ω , C_L = 5pF, f = 1MHz		-14		dB
ACPSRR	AC Power Supply Rejection Ratio	R_L = 10kΩ , C_L = 5pF, V_{PP}= 0.62V, f= 1MHz		–59		dB
BW	-3dB Bandwidth	R_L = 50Ω , C_L = 5pF		750		MHz
C_{IN}	Digital input capacitance	V_{IN} = 0V or V_{DD}		1.6		pF
$C_{S(OFF)}$	Source off-capacitance	V_S = 6V, f = 1MHz (PW package)		2.2	3.1	pF
		V_S = 6V, f = 1MHz (RTE package)		2.9	4.0	pF
$C_{D(OFF)}$	Drain off-capacitance	V_S = 6V, f = 1MHz		2.8	3.5	pF
$C_{S(ON)}$, $C_{D(ON)}$	Source and drain on-capacitance	V_S = 6V, f = 1MHz		4.6	6.3	pF

Copyright © 2025 Texas Instruments Incorporated

6.9 Typical Characteristics

at T_A = 25°C, V_{DD} = 15V, and V_{SS} = –15V (unless otherwise noted)

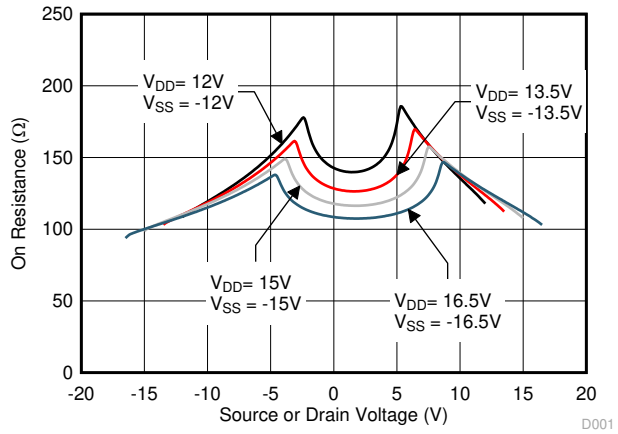

Dual Supply Operation (T_A = 25°C)

Figure 6-1. On-Resistance vs Source or Drain Voltage

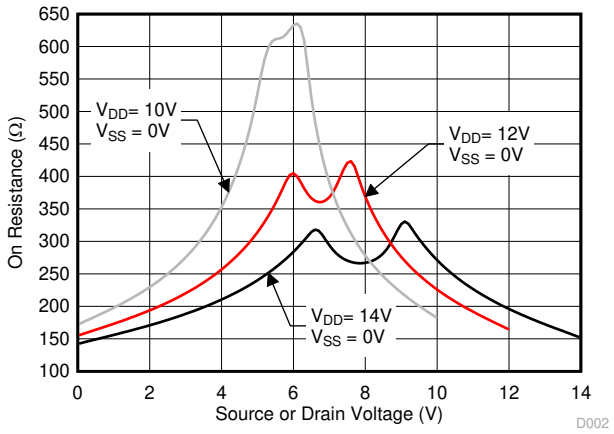

Single Supply Operation (T_A = 25°C)

Figure 6-2. On-Resistance vs Source or Drain Voltage

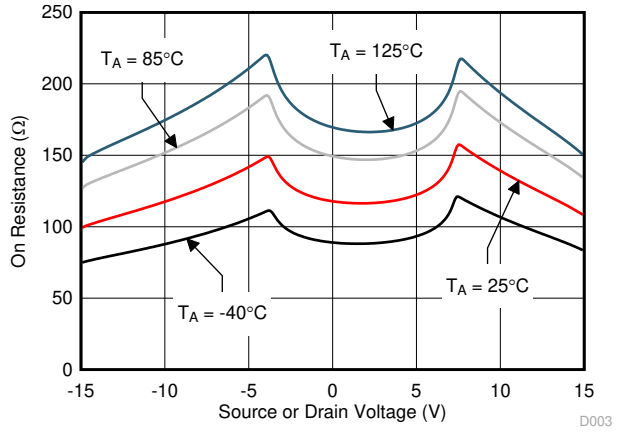

V_{DD} = 15V, V_{SS} = –15V

Figure 6-3. On-Resistance vs Source or Drain Voltage

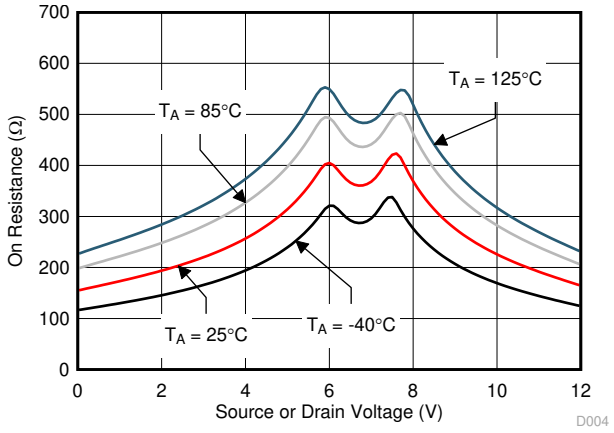

V_{DD} = 12V, V_{SS} = 0V

Figure 6-4. On-Resistance vs Source or Drain Voltage

Copyright © 2025 Texas Instruments Incorporated

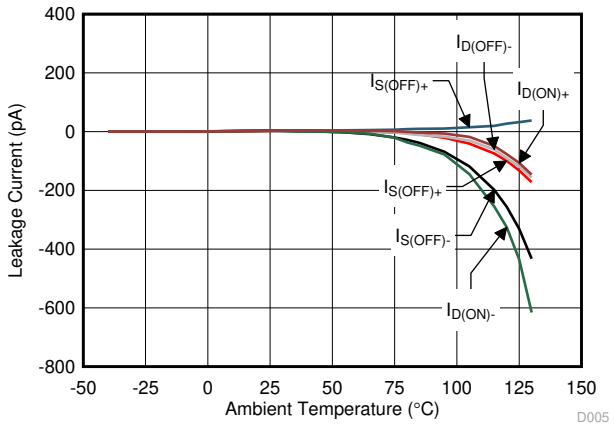

V_{DD} = 15V, V_{SS} = –15V

Figure 6-5. Leakage Current vs Temperature

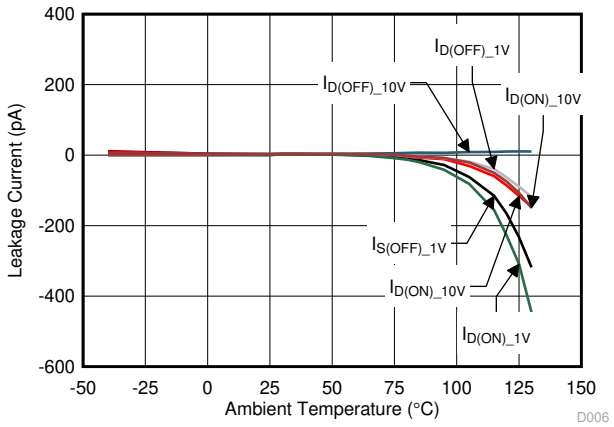

V_{DD} = 12V, V_{SS} = 0V

Figure 6-6. Leakage Current vs Temperature

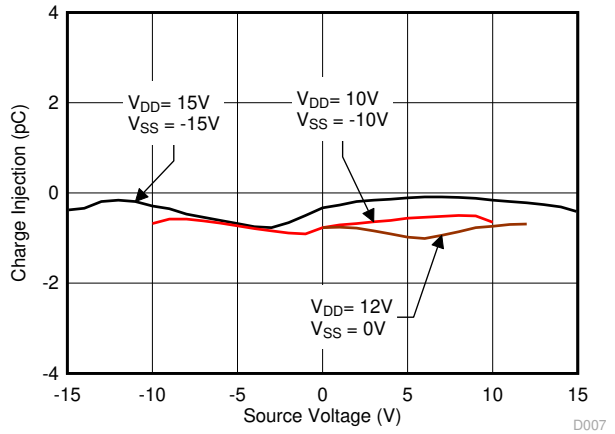

T_A = 25°C

Figure 6-7. Charge Injection vs Source Voltage

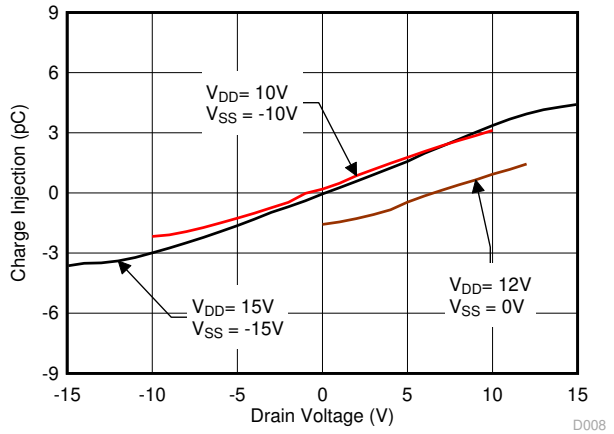

T_A = 25°C

Figure 6-8. Charge Injection vs Drain Voltage

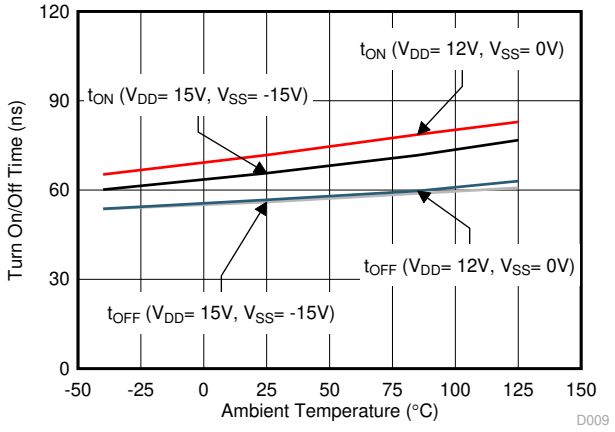

Figure 6-9. Turn-On and Turn-Off Times vs Temperature

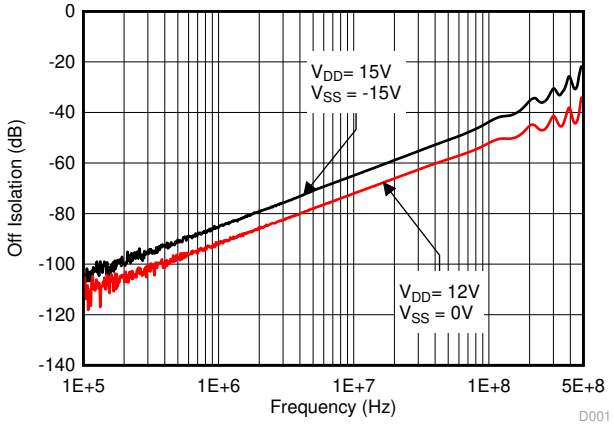

T_A = 25°C

Figure 6-10. Off Isolation vs Frequency

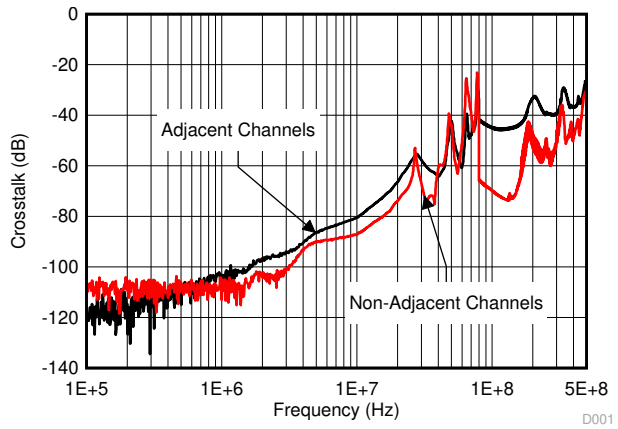

V_{DD} = 15V, V_{SS} = –15V, T_A = 25°C

Figure 6-11. Crosstalk vs Frequency

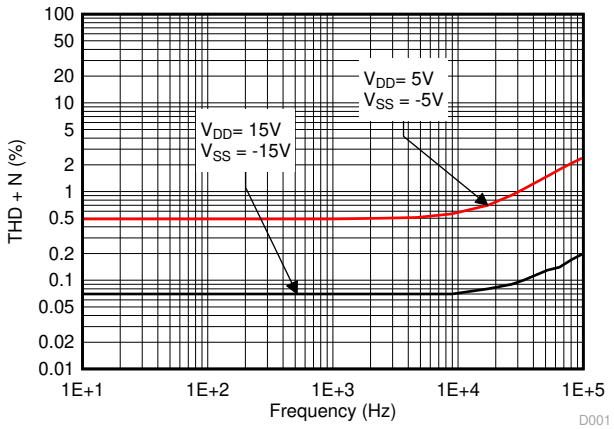

T_A = 25°C

Figure 6-12. THD+N vs Frequency

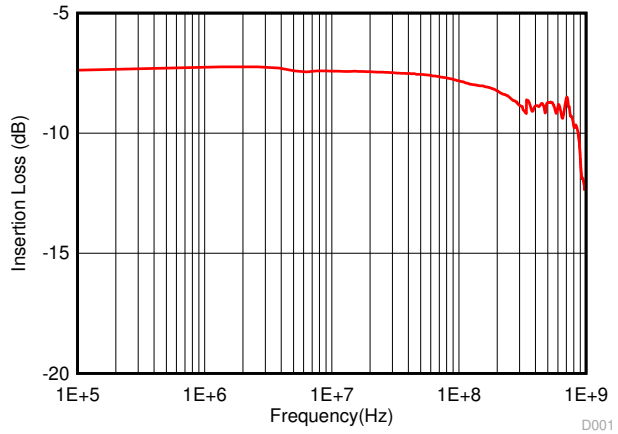

V_{DD} = 15V, V_{SS} = –15V, T_A = 25°C

Figure 6-13. On Response vs Frequency

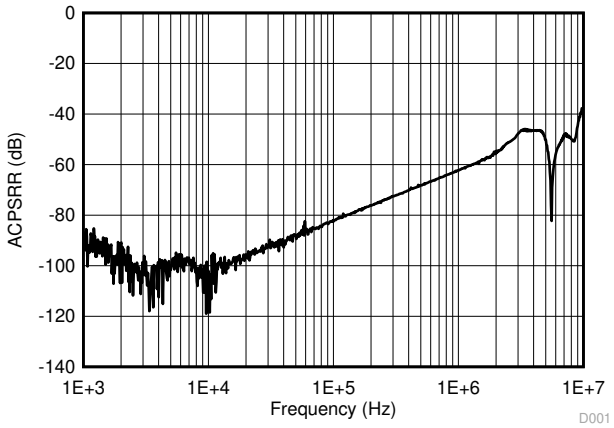

A. V_{DD} = 15V, V_{SS} = –15V, V_{PP}= 0.62V, T_A = 25°C

Figure 6-14. ACPSRR vs Frequency

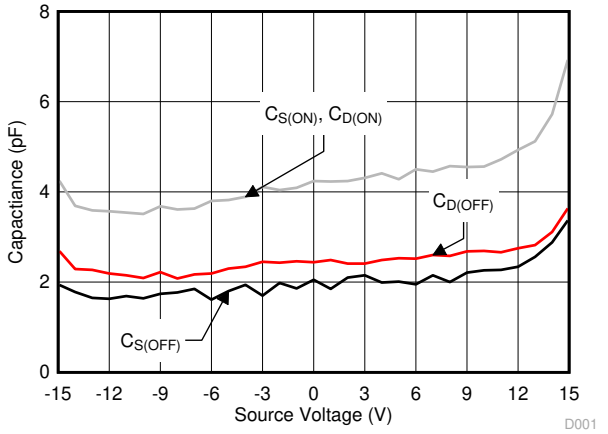

V_{DD} = 15V, V_{SS} = –15V, T_A = 25°C

Figure 6-15. Capacitance vs Source Voltage

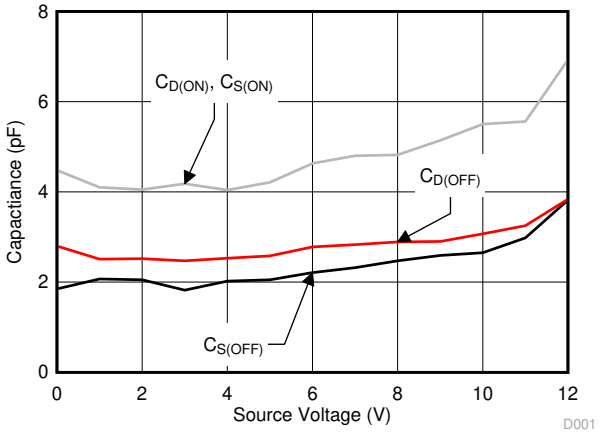

V_{DD} = 12V, V_{SS} = 0V, T_A = 25°C

Figure 6-16. Capacitance vs Source Voltage

Copyright © 2025 Texas Instruments Incorporated

7 Parameter Measurement Information

7.1 Truth Tables

Table 7-1, Table 7-2, Table 7-3and show the truth tables for the TMUX6111, TMUX6112, and TMUX6113, respectively.

Table 7-1. TMUX6111 Truth Table

SELx	STATE
0	All Switch ON
1	All Switch OFF

Table 7-2. TMUX6112 Truth Table

SELx	STATE
0	All Switch OFF
1	All Switch ON

Table 7-3. TUMUX6113 Truth Table

SELx	STATE
0	Switch 1, 4 OFF Switch 2, 3 ON
1	Switch 1, 4 ON Switch 2, 3 OFF

Copyright © 2025 Texas Instruments Incorporated

8 Detailed Description

8.1 Overview

The TMUX6111, TMUX6112, and TMUX6113 are 4-channel single-pole/ single-throw (SPDT) switches that supports dual supplies (±5V to ±17V) or single supply (10V to 17V) operation. Each channel of the switch is turned on or turned off based on the state of its corresponding SELx pin. The Section 8.2 section provides a top-level block diagram of the switches.

8.1.1 On-Resistance

The on-resistance of the TMUX6111, TMUX6112, and TMUX6113 is the ohmic resistance across the source (Sx) and drain (Dx) pins of the device. The on-resistance varies with input voltage and supply voltage. The symbol R_{ON} is used to denote on-resistance. The measurement setup used to measure R_{ON} is shown in Figure 8-1. Voltage (V) and current (I_{CH}) are measured using this setup, and R_{ON} is computed as shown in Equation 1:

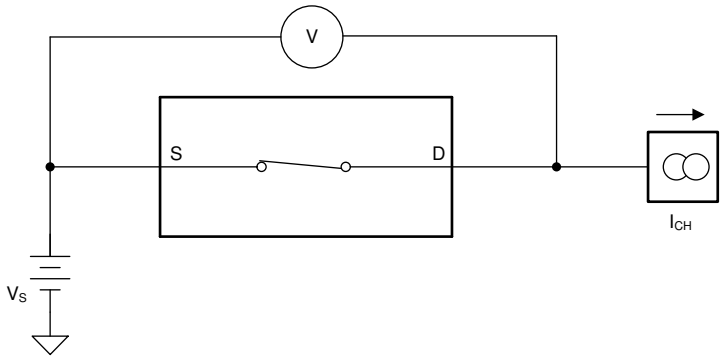

Figure 8-1. On-Resistance Measurement Setup

$$R_{ON} = V / I_{CH} \quad (1)$$

8.1.2 Off-Leakage Current

There are two types of leakage currents associated with a switch during the off state:

1. Source off-leakage current
2. Drain off-leakage current

Source leakage current is defined as the leakage current flowing into or out of the source pin when the switch is off. This current is denoted by the symbol $I_{S(OFF)}$.

Drain leakage current is defined as the leakage current flowing into or out of the drain pin when the switch is off. This current is denoted by the symbol $I_{D(OFF)}$.

The setup used to measure both off-leakage currents is shown in Figure 8-2

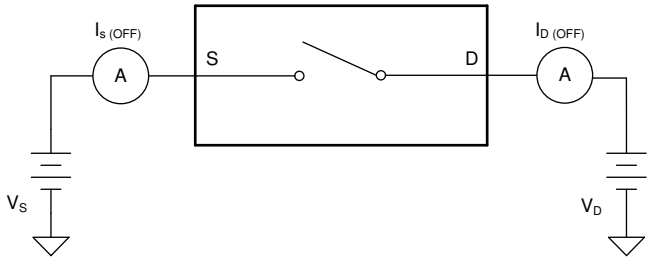

Figure 8-2. Off-Leakage Measurement Setup

Copyright © 2025 Texas Instruments Incorporated

8.1.3 On-Leakage Current

On-leakage current is defined as the leakage current that flows into or out of the drain pin when the switch is in the on state. The source pin is left floating during the measurement. Figure 8-3 shows the circuit used for measuring the on-leakage current, denoted by $I_{D(ON)}$.

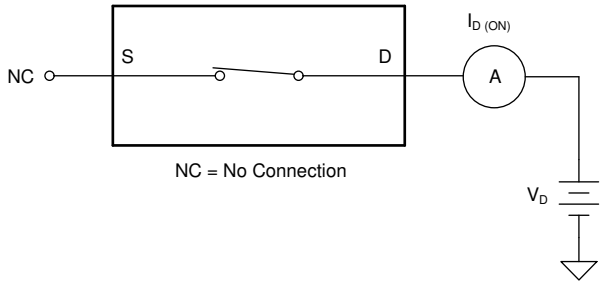

Figure 8-3. On-Leakage Measurement Setup

8.1.4 Break-Before-Make Delay

The break-before-make delay is a safety feature of the TMUX6113 switch. The TMUX6113's ON switches first break the connection before the OFF switches make connection. The time delay between the *break* and the *make* is known as break-before-make delay. Figure 8-4 shows the setup used to measure break-before-make delay, denoted by the symbol t_{BBM}.

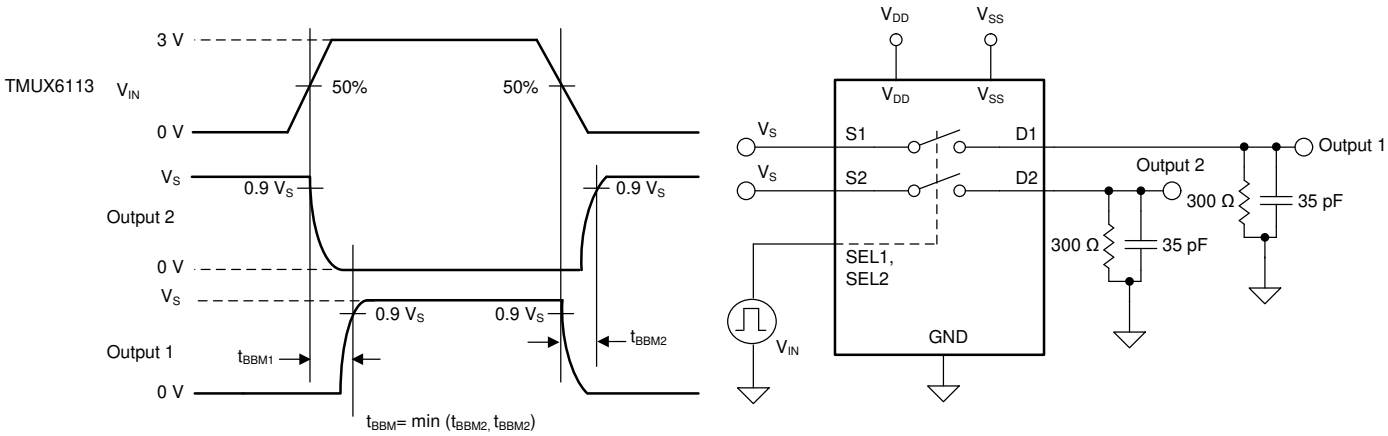

Figure 8-4. Break-Before-Make Delay Measurement Setup

8.1.5 Turn-On and Turn-Off Time

Turn-on time is defined as the time taken by the output of the TMUX6111, TMUX6112, and TMUX6113 to rise to a 90% final value after the SELx signal has risen (for NC switches) or fallen (for NO switches) to a 50% final value. Figure 8-5 shows the setup used to measure turn-on time. Turn-on time is denoted by the symbol t_{ON}.

Turn off time is defined as the time taken by the output of the TMUX6111, TMUX6112, and TMUX6113 to fall to a 10% initial value after the SELx signal has fallen (for NC switches) or risen (for NO switches) to a 50% initial value. Figure 8-5 shows the setup used to measure turn-off time. Turn-off time is denoted by the symbol t_{OFF}.

Copyright © 2025 Texas Instruments Incorporated

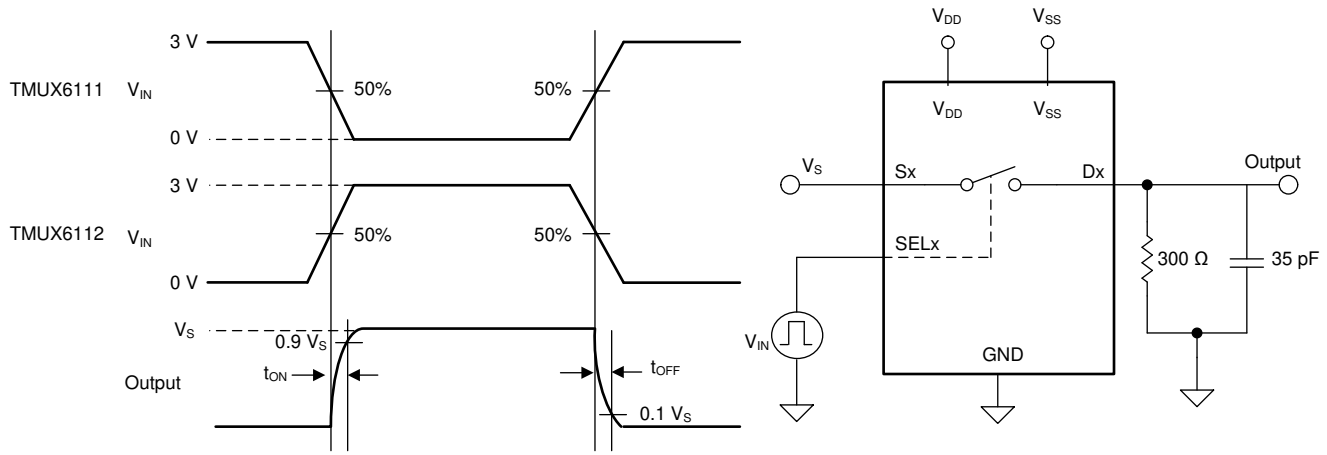

Figure 8-5. Turn-On and Turn-Off Time Measurement Setup

8.1.6 Charge Injection

The TMUX6111, TMUX6112, and TMUX6113 have a simple transmission-gate topology. Any mismatch in capacitance between the NMOS and PMOS transistors results in a charge injected into the drain or source during the falling or rising edge of the gate signal. The amount of charge injected into the source or drain of the device is known as charge injection, and is denoted by the symbol Q_{INJ}. Figure 8-6 shows the setup used to measure charge injection.

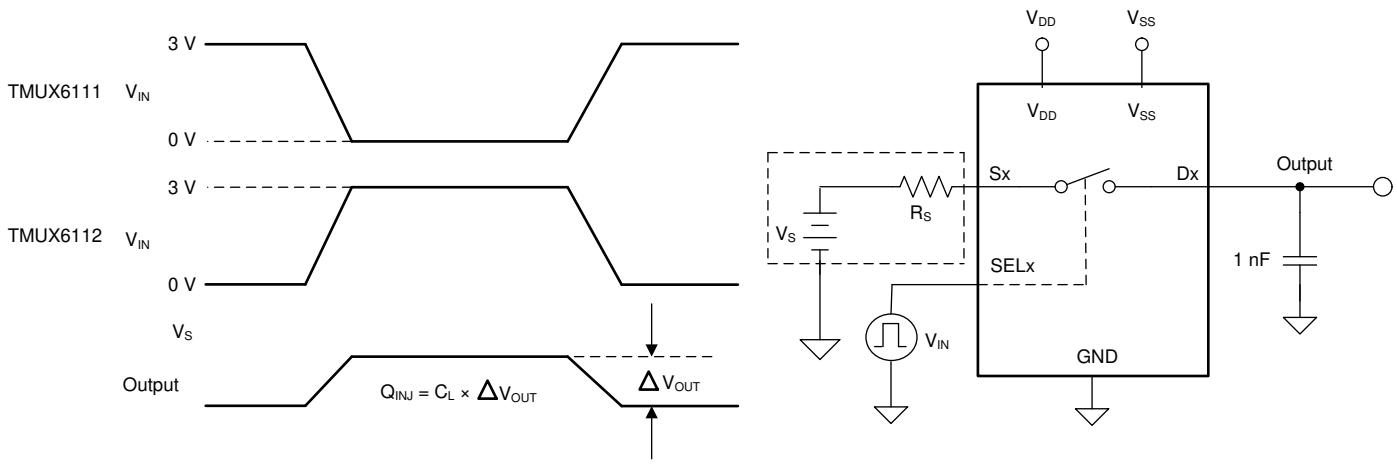

Figure 8-6. Charge-Injection Measurement Setup

8.1.7 Off Isolation

Off isolation is defined as the voltage at the drain pin (Dx) of the TMUX6111, TMUX6112, and TMUX6113 when a 1-V_{RMS} signal is applied to the source pin (Sx) of an OFF switch. Figure 8-7 shows the setup used to measure off isolation. Use Equation 2 to compute off isolation.

Copyright © 2025 Texas Instruments Incorporated

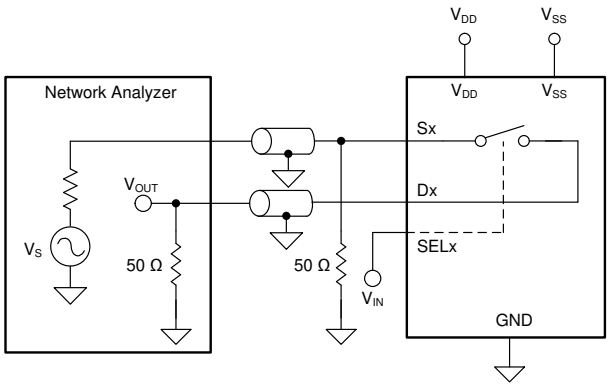

Figure 8-7. Off Isolation Measurement Setup

$$\text{Off Isolation} = 20 \cdot \text{Log}\left(\frac{V_{OUT}}{V_S}\right) \tag{2}$$

8.1.8 Channel-to-Channel Crosstalk

Channel-to-channel crosstalk is defined as the voltage at the source pin (Sx) of an off-channel, when a $1V_{RMS}$ signal is applied at the source pin of an on-channel. Figure 8-8 shows the setup used to measure, and Equation 3 is the equation used to compute, channel-to-channel crosstalk.

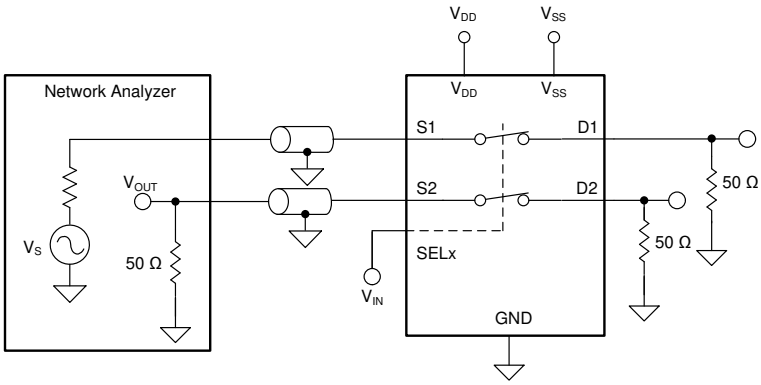

Figure 8-8. Channel-to-Channel Crosstalk Measurement Setup

$$\text{Channel-to-Channel Crosstalk} = 20 \cdot \text{Log}\left(\frac{V_{OUT}}{V_S}\right) \tag{3}$$

8.1.9 Bandwidth

Bandwidth is defined as the range of frequencies that are attenuated by < 3dB when the input is applied to the source pin (Sx) of an on-channel, and the output is measured at the drain pin (Dx) of the TMUX6111, TMUX6112, and TMUX6113. Figure 8-9 shows the setup used to measure bandwidth of the switch. Use Equation 4 to compute the attenuation.

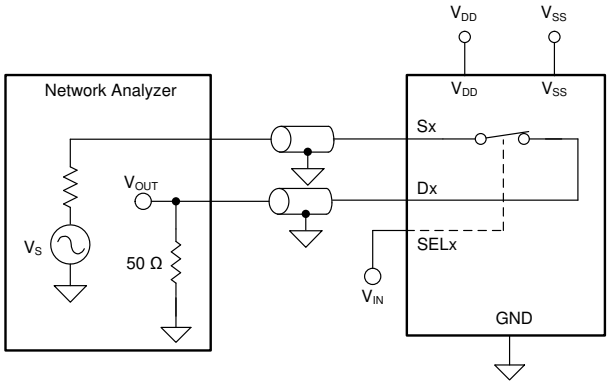

Figure 8-9. Bandwidth Measurement Setup

$$\text{Attenuation} = 20 \cdot \text{Log}\left(\frac{V_2}{V_1}\right) \tag{4}$$

8.1.10 THD + Noise

The total harmonic distortion (THD) of a signal is a measurement of the harmonic distortion, and is defined as the ratio of the sum of the powers of all harmonic components to the power of the fundamental frequency at the mux output. The on-resistance of the TMUX6111, TMUX6112, and TMUX6113 varies with the amplitude of the input signal and results in distortion when the drain pin is connected to a low-impedance load. Total harmonic distortion plus noise is denoted as THD+N. Figure 8-10 shows the setup used to measure THD+N of the TMUX6111, TMUX6112, and TMUX6113.

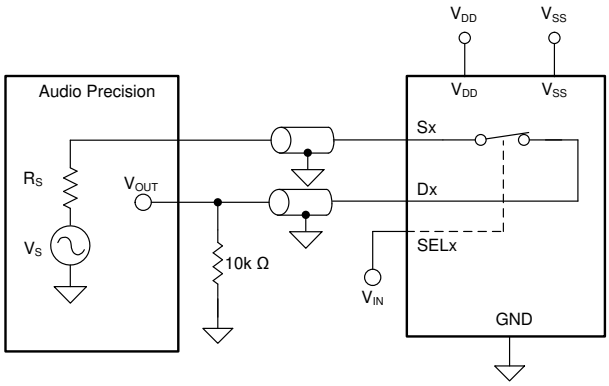

Figure 8-10. THD+N Measurement Setup

Copyright © 2025 Texas Instruments Incorporated

8.2 Functional Block Diagram

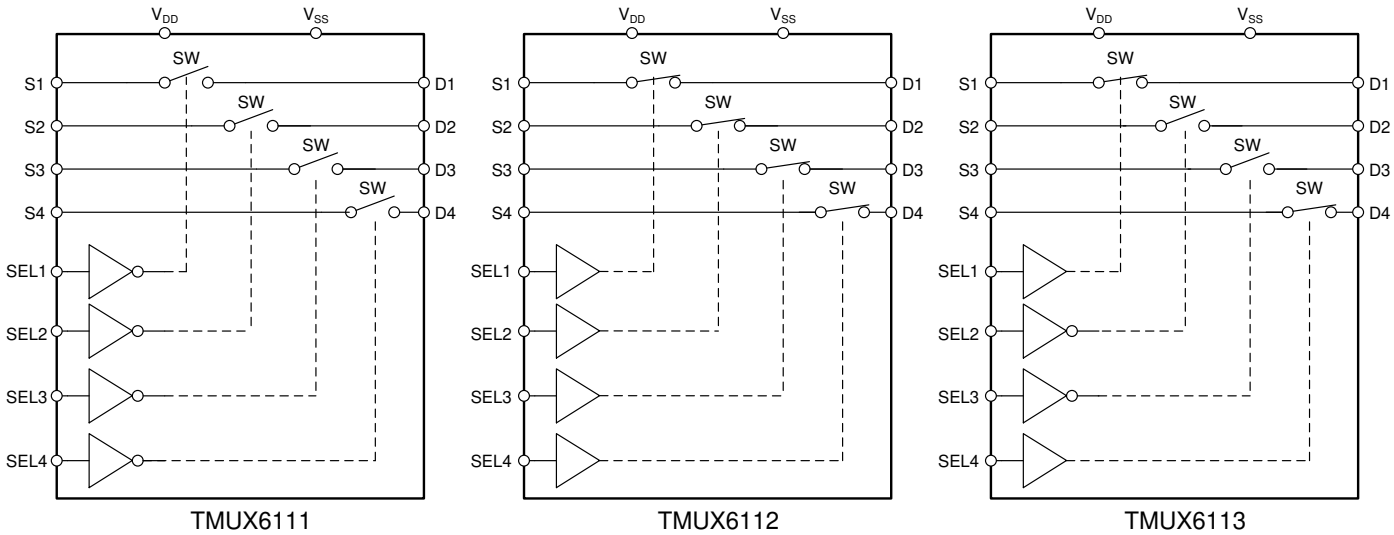

8.3 Feature Description

8.3.1 Ultra-low Leakage Current

The TMUX6111, TMUX6112, and TMUX6113 provide extremely low on- and off-leakage currents. The devices are capable of switching signals from high source-impedance inputs into a high input-impedance op amp with minimal offset error because of the ultralow leakage currents. Figure 8-11 shows typical leakage currents of the devices versus temperature.

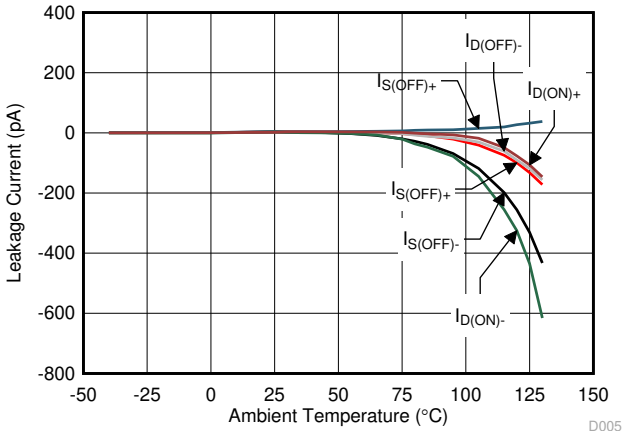

Figure 8-11. Leakage Current vs Temperature

8.3.2 Ultra-low Charge Injection

The TMUX6111, TMUX6112, and TMUX6113 are implemented with simple transmission gate topology, as shown in Figure 8-12. Any mismatch in the stray capacitance associated with the NMOS and PMOS causes an output level change whenever the switch is opened or closed. The devices utilize special charge-injection cancellation circuitry that reduces the source (Sx)-to-drain (Dx) charge injection to as low as 0.6pC at V_S = 0V, as shown in Figure 8-13.

Copyright © 2025 Texas Instruments Incorporated

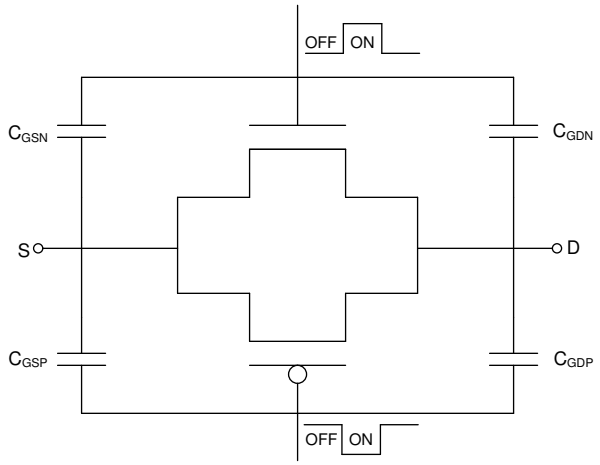

Figure 8-12. Transmission Gate Topology

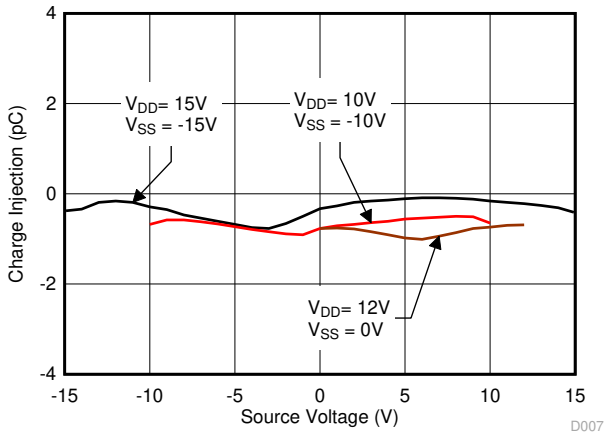

Figure 8-13. Source-to-Drain Charge Injection vs Source or Drain Voltage

8.3.3 Bidirectional and Rail-to-Rail Operation

The TMUX6111, TMUX6112, and TMUX6113 conduct equally well from source (Sx) to drain (Dx) or from drain (Dx) to source (Sx). Each channel of the switches has very similar characteristics in both directions. The input signal to the devices swings from V_{SS} to V_{DD} without any significant degradation in performance. The on-resistance of these devices varies with input signal.

8.4 Device Functional Modes

Each channel of the TMUX6111, TMUX6112, and TMUX6113 is turned on or turned off based on the state of its corresponding SELx pin. The SELx pins are weakly pulled-down through an internal 6MΩ resistor, allowing the switches to stay in a determined state when power is applies to the devices. The SELx pins can be connected to V_{DD}.

Copyright © 2025 Texas Instruments Incorporated

9 Application and Implementation

Note

Information in the following applications sections is not part of the TI component specification, and TI does not warrant its accuracy or completeness. TI's customers are responsible for determining suitability of components for their purposes, as well as validating and testing their design implementation to confirm system functionality.

9.1 Application Information

The TMUX6111, TMUX6112, and TMUX6113 offer outstanding input/output leakage currents and ultralow charge injection. These devices operate up to 34 (dual supply) or 17V (single supply), and offer true rail-to-rail input and output. The on-capacitance of the TMUX6111, TMUX6112, and TMUX6113 is low. These features makes the TMUX6111, TMUX6112, and TMUX6113 a family of precision, robust, high-performance analog multiplexer for high-voltage, industrial applications.

9.2 Typical Application

One useful application to take advantage of TMUX6111, TMUX6112, and TMUX6113's precision performance is the sample and hold circuit. A sample and hold circuit can be useful for an analog to digital converter (ADC) to sample a varying input voltage with improved reliability and stability. It can also be used to store the output samples from a single digital-to-analog converter (DAC) in a multi-output application. A simple sample and hold circuit can be realized using an analog switch like one of the TMUX6111, TMUX6112, and TMUX6113 analog switches.

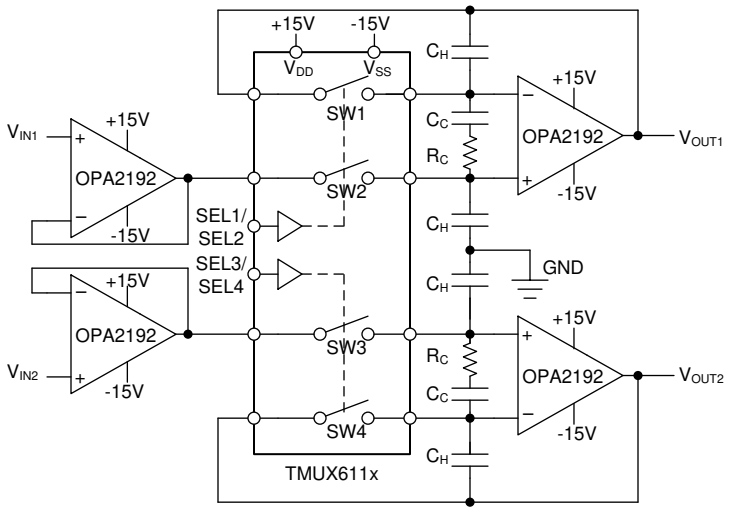

Figure 9-1. A 2-output Sample and Hold Circuit Realized Using the TMUX611x Analog Switch

9.2.1 Design Requirements

The purpose of this precision design is to implement an optimized 2-output sample and hold circuit using a 4-channel SPST switch. The sample and hold circuit needs to be capable of supporting high voltage output swing up to ±15V with minimized pedestal error and fast settling time. The overall system block diagram is illustrated in Figure 9-1.

9.2.2 Detailed Design Procedure

The TMUX6111, TMUX6112, or TMUX6113 switch is used in conjunction with the voltage holding capacitors (C_H) to implement the sample and hold circuit. The basic operation is:

1. When the switch (SW2 or SW3) is closed, it samples the input voltage and charges the holding capacitors (C_H) to the input voltages values.
2. When the switch (SW2 or SW3) is open, the holding capacitors (C_H) holds its previous value, maintaining stable voltage at the amplifier output (V_{OUT}).

Ideally, the switch delivers only the input signals to the holding capacitors. However, when the switch gets toggled, some amount of charge also gets transferred to the switch output in the form of charge injection, resulting slight sampling error. The TMUX6111, TMUX6112, and TMUX6113 switches have excellent charge injection performance of only 0.6pC, making them ideal choices for this implementation to minimize sampling error.

Due to switch and capacitor leakage current, the voltage on the hold capacitors droops with time. The TMUX6111, TMUX6112, and TMUX6113 minimize the droops due to its ultra-low leakage performance. At 25°C, the TMUX6111, TMUX6112, and TMUX6113 have extremely tiny leakage current at 1pA typical and 20pA max.

The TMUX6111, TMUX6112, and TMUX6113 devices also support high voltage capability. The devices support up to ± 17V dual supply operation, making it an ideal solution in this high voltage sample and hold application.

A second switch SW1 (or SW4) is also included to operate in parallel with SW2 (or SW3) to reduce pedestal error during switch toggling. Because both switches are driven at the same potential, they act as common-mode signal to the op-amp, thereby minimizing the charge injection effects caused by the switch toggling action. Compensation network consisting of R_C and C_C is also added to further reduce the pedestal error, whiling reducing the hold-time glitch and improving the settling time of the circuit.

9.2.3 Application Curves

TMUX6111, TMUX6112, and TMUX6113 have excellent charge injection performance of only 0.6pC (typical), making them ideal choices to minimize sampling error for the sample and hold application. Figure 9-2 shows the plot for the charge injection vs. source input voltage for TMUX6111, TMUX6112, and TMUX6113.

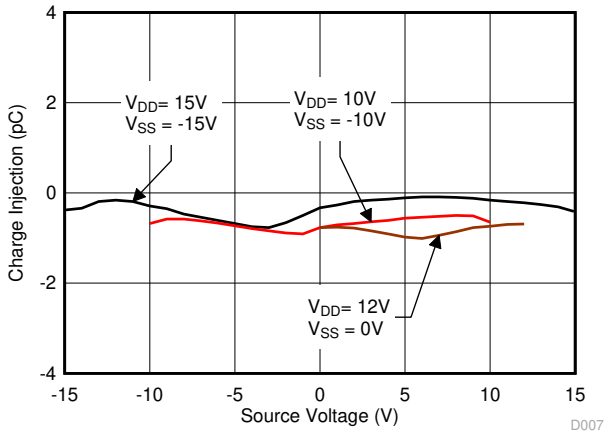

Figure 9-2. Charge injection vs. Source Voltage for TMUX6111, TMUX6112 and TMUX6113

Copyright © 2025 Texas Instruments Incorporated

9.3 Power Supply Recommendations

The TMUX6111, TMUX6112, and TMUX6113 operate across a wide supply range of ±5V to ±17V (10V to 17V in single-supply mode). They also perform well with asymmetrical supplies such as V_{DD} = 12V and V_{SS}= –5V. For improved supply noise immunity, use a supply decoupling capacitor ranging from 0.1µF to 10µF at both the V_{DD} and V_{SS} pins to ground. Always ensure the ground (GND) connection is established before supplies are ramped. As a best practice, it is recommended to ramp V_{SS} first before V_{DD} in dual or asymmetrical supply applications.

The on-resistance of the devices varies with supply voltage, as illustrated in Figure 9-3.

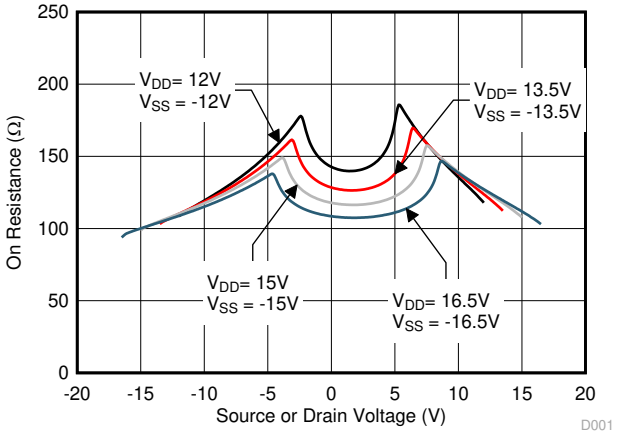

Figure 9-3. On-Resistance Variation With Supply and Input Voltage

9.4 Layout

9.4.1 Layout Guidelines

Figure 9-4 illustrates an example of a PCB layout with the TMUX6112PW. Some key considerations are:

- Decouple the V_{DD} and V_{SS} pins with a 0.1µF capacitor, placed as close to the pin as possible. Make sure that the capacitor voltage rating is sufficient for the V_{DD} and V_{SS} supplies.
- Keep the input lines as short as possible.
- Use a solid ground plane to help distribute heat and reduce electromagnetic interference (EMI) noise pickup.
- Do not run sensitive analog traces in parallel with digital traces. Avoid crossing digital and analog traces if possible, and only make perpendicular crossings when necessary.

9.4.2 Layout Example

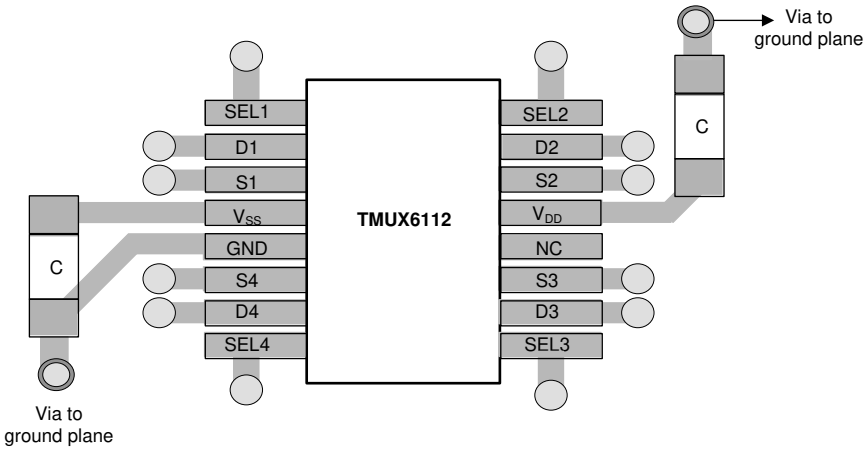

Figure 9-4. TMUX6112PW Layout Example

10 Device and Documentation Support

10.1 Documentation Support

10.1.1 Related Documentation

- Texas Instruments, *OPAx192 36-V, Precision, Rail-to-Rail Input/Output, Low Offset Voltage, Low Input Bias Current Op Amp with e-trim™*

10.2 Receiving Notification of Documentation Updates

To receive notification of documentation updates, navigate to the device product folder on ti.com. Click on *Notifications* to register and receive a weekly digest of any product information that has changed. For change details, review the revision history included in any revised document.

10.3 Support Resources

TI E2E™ support forums are an engineer's go-to source for fast, verified answers and design help — straight from the experts. Search existing answers or ask your own question to get the quick design help you need.

Linked content is provided "AS IS" by the respective contributors. They do not constitute TI specifications and do not necessarily reflect TI's views; see TI's Terms of Use.

10.4 Trademarks

TI E2E™ is a trademark of Texas Instruments.
All trademarks are the property of their respective owners.

10.5 Electrostatic Discharge Caution

This integrated circuit can be damaged by ESD. Texas Instruments recommends that all integrated circuits be handled with appropriate precautions. Failure to observe proper handling and installation procedures can cause damage.

ESD damage can range from subtle performance degradation to complete device failure. Precision integrated circuits may be more susceptible to damage because very small parametric changes could cause the device not to meet its published specifications.

10.6 Glossary

TI Glossary	This glossary lists and explains terms, acronyms, and definitions.

Copyright © 2025 Texas Instruments Incorporated

11 Revision History

NOTE: Page numbers for previous revisions may differ from page numbers in the current version.

Changes from Revision E (December 2019) to Revision F (July 2025)	Page
• Updated the numbering format for tables, figures, and cross-references throughout the document	1
• Changed Wide supply range: 10V to 17V (single) to 10V to 17V (dual)	1
• Changed Low input leakage: 0.5pA to: 5pA	1

Changes from Revision D (January 2019) to Revision E (December 2019)	Page
• Changed the *Title* from TMUX611x ±16.5V to TMUX611x ±17V	1
• Changed *Feature* from Wide Supply Range: ±5V to ±16.5V (dual), 10V to 16.5V (single) to Wide Supply Range: ±5V to ±17V (dual), 10V to 17V (single)	1
• Changed the *Description* from dual supplies (±5V to ±16.5V), a single supply (10V to 16.5V) to dual supplies (±5V to ±17V), a single supply (10V to 17V)	1
• Changed ±16.5V to ±17.5V in the Description of the *Device Comparison Table*	4
• Changed recommended power supply voltage differential from 33V to 34V	5
• Changed recommended single supply voltage from 16.5V to 17V	5
• Changed positive and negative power supply voltage to +17V and -17V	5
• The *Overview* From: dual supplies (±5V to ±16.5V) or single supply (10V to 16.5V) To: dual supplies (±5V to ±17V) or single supply (10V to 17V)	14
• Changed the *Application Information* From: 16.5V (single supply) to 17V (single supply)	21
• The *Power Supply Recommendations* From: wide supply range of ±5V to ±16.5V (10V to 16.5V in single-supply mode) to wide supply range of ±5V to ±17V (10V to 17V in single-supply mode)	23

12 Mechanical, Packaging, and Orderable Information

The following pages include mechanical, packaging, and orderable information. This information is the most current data available for the designated devices. This data is subject to change without notice and revision of this document. For browser-based versions of this data sheet, refer to the left-hand navigation.

Copyright © 2025 Texas Instruments Incorporated

PACKAGING INFORMATION

Orderable part number	Status (1)	Material type (2)	Package | Pins	Package qty | Carrier	RoHS (3)	Lead finish/ Ball material (4)	MSL rating/ Peak reflow (5)	Op temp (°C)	Part marking (6)
TMUX6111PWR	Active	Production	TSSOP (PW) | 16	2000 | LARGE T&R	Yes	NIPDAU | SN	Level-1-260C-UNLIM	-40 to 125	MUX6111
TMUX6111PWR.B	Active	Production	TSSOP (PW) | 16	2000 | LARGE T&R	Yes	NIPDAU	Level-1-260C-UNLIM	-40 to 125	MUX6111
TMUX6111RTER	Active	Production	WQFN (RTE) | 16	3000 | LARGE T&R	Yes	NIPDAU	Level-1-260C-UNLIM	-40 to 125	TM6111
TMUX6111RTER.B	Active	Production	WQFN (RTE) | 16	3000 | LARGE T&R	Yes	NIPDAU	Level-1-260C-UNLIM	-40 to 125	TM6111
TMUX6112PWR	Active	Production	TSSOP (PW) | 16	2000 | LARGE T&R	Yes	NIPDAU | SN	Level-1-260C-UNLIM	-40 to 125	MUX6112
TMUX6112PWR.B	Active	Production	TSSOP (PW) | 16	2000 | LARGE T&R	Yes	NIPDAU	Level-1-260C-UNLIM	-40 to 125	MUX6112
TMUX6112RTER	Active	Production	WQFN (RTE) | 16	3000 | LARGE T&R	Yes	NIPDAU	Level-1-260C-UNLIM	-40 to 125	TM6112
TMUX6112RTER.B	Active	Production	WQFN (RTE) | 16	3000 | LARGE T&R	Yes	NIPDAU	Level-1-260C-UNLIM	-40 to 125	TM6112
TMUX6112RTERG4	Active	Production	WQFN (RTE) | 16	3000 | LARGE T&R	Yes	NIPDAU	Level-1-260C-UNLIM	-40 to 125	TM6112
TMUX6112RTERG4.B	Active	Production	WQFN (RTE) | 16	3000 | LARGE T&R	Yes	NIPDAU	Level-1-260C-UNLIM	-40 to 125	TM6112
TMUX6113PWR	Active	Production	TSSOP (PW) | 16	2000 | LARGE T&R	Yes	NIPDAU	Level-1-260C-UNLIM	-40 to 125	MUX6113
TMUX6113PWR.B	Active	Production	TSSOP (PW) | 16	2000 | LARGE T&R	Yes	NIPDAU	Level-1-260C-UNLIM	-40 to 125	MUX6113
TMUX6113PWRG4	Active	Production	TSSOP (PW) | 16	2000 | LARGE T&R	Yes	NIPDAU	Level-1-260C-UNLIM	-40 to 125	MUX6113
TMUX6113PWRG4.B	Active	Production	TSSOP (PW) | 16	2000 | LARGE T&R	Yes	NIPDAU	Level-1-260C-UNLIM	-40 to 125	MUX6113
TMUX6113RTER	Active	Production	WQFN (RTE) | 16	3000 | LARGE T&R	Yes	NIPDAU	Level-1-260C-UNLIM	-40 to 125	TM6113
TMUX6113RTER.B	Active	Production	WQFN (RTE) | 16	3000 | LARGE T&R	Yes	NIPDAU	Level-1-260C-UNLIM	-40 to 125	TM6113

(1) **Status:** For more details on status, see our product life cycle.

(2) **Material type:** When designated, preproduction parts are prototypes/experimental devices, and are not yet approved or released for full production. Testing and final process, including without limitation quality assurance, reliability performance testing, and/or process qualification, may not yet be complete, and this item is subject to further changes or possible discontinuation. If available for ordering, purchases will be subject to an additional waiver at checkout, and are intended for early internal evaluation purposes only. These items are sold without warranties of any kind.

(3) **RoHS values:** Yes, No, RoHS Exempt. See the TI RoHS Statement for additional information and value definition.

(4) **Lead finish/Ball material:** Parts may have multiple material finish options. Finish options are separated by a vertical ruled line. Lead finish/Ball material values may wrap to two lines if the finish value exceeds the maximum column width.

(5) **MSL rating/Peak reflow:** The moisture sensitivity level ratings and peak solder (reflow) temperatures. In the event that a part has multiple moisture sensitivity ratings, only the lowest level per JEDEC standards is shown. Refer to the shipping label for the actual reflow temperature that will be used to mount the part to the printed circuit board.

(6) **Part marking:** There may be an additional marking, which relates to the logo, the lot trace code information, or the environmental category of the part.

Multiple part markings will be inside parentheses. Only one part marking contained in parentheses and separated by a "~" will appear on a part. If a line is indented then it is a continuation of the previous line and the two combined represent the entire part marking for that device.

Important Information and Disclaimer: The information provided on this page represents TI's knowledge and belief as of the date that it is provided. TI bases its knowledge and belief on information provided by third parties, and makes no representation or warranty as to the accuracy of such information. Efforts are underway to better integrate information from third parties. TI has taken and continues to take reasonable steps to provide representative and accurate information but may not have conducted destructive testing or chemical analysis on incoming materials and chemicals. TI and TI suppliers consider certain information to be proprietary, and thus CAS numbers and other limited information may not be available for release.

In no event shall TI's liability arising out of such information exceed the total purchase price of the TI part(s) at issue in this document sold by TI to Customer on an annual basis.

TAPE AND REEL INFORMATION

REEL DIMENSIONS

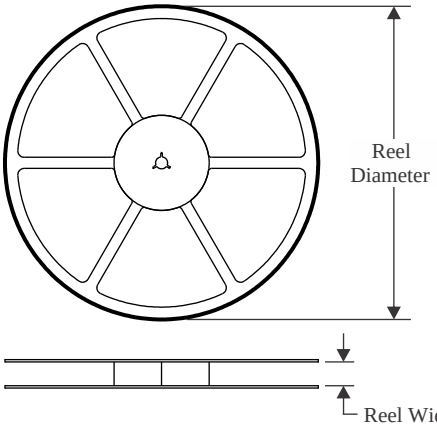

TAPE DIMENSIONS

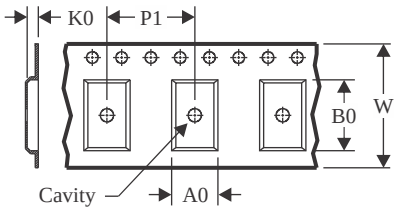

A0	Dimension designed to accommodate the component width
B0	Dimension designed to accommodate the component length
K0	Dimension designed to accommodate the component thickness
W	Overall width of the carrier tape
P1	Pitch between successive cavity centers

QUADRANT ASSIGNMENTS FOR PIN 1 ORIENTATION IN TAPE

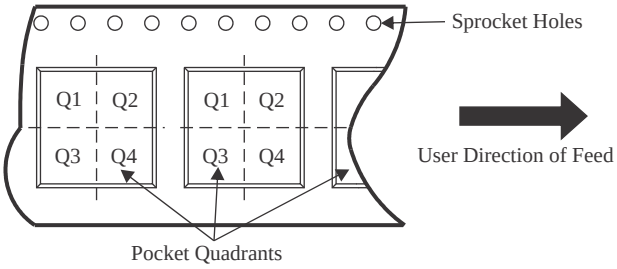

*All dimensions are nominal

Device	Package Type	Package Drawing	Pins	SPQ	Reel Diameter (mm)	Reel Width W1 (mm)	A0 (mm)	B0 (mm)	K0 (mm)	P1 (mm)	W (mm)	Pin1 Quadrant
TMUX6111PWR	TSSOP	PW	16	2000	330.0	12.4	6.9	5.6	1.6	8.0	12.0	Q1
TMUX6111RTER	WQFN	RTE	16	3000	330.0	12.4	3.3	3.3	1.1	8.0	12.0	Q2
TMUX6112PWR	TSSOP	PW	16	2000	330.0	12.4	6.9	5.6	1.6	8.0	12.0	Q1
TMUX6112PWR	TSSOP	PW	16	2000	330.0	12.4	6.9	5.6	1.6	8.0	12.0	Q1
TMUX6112RTER	WQFN	RTE	16	3000	330.0	12.4	3.3	3.3	1.1	8.0	12.0	Q2
TMUX6112RTERG4	WQFN	RTE	16	3000	330.0	12.4	3.3	3.3	1.1	8.0	12.0	Q2
TMUX6113PWR	TSSOP	PW	16	2000	330.0	12.4	6.9	5.6	1.6	8.0	12.0	Q1
TMUX6113PWRG4	TSSOP	PW	16	2000	330.0	12.4	6.9	5.6	1.6	8.0	12.0	Q1
TMUX6113RTER	WQFN	RTE	16	3000	330.0	12.4	3.3	3.3	1.1	8.0	12.0	Q2

TAPE AND REEL BOX DIMENSIONS

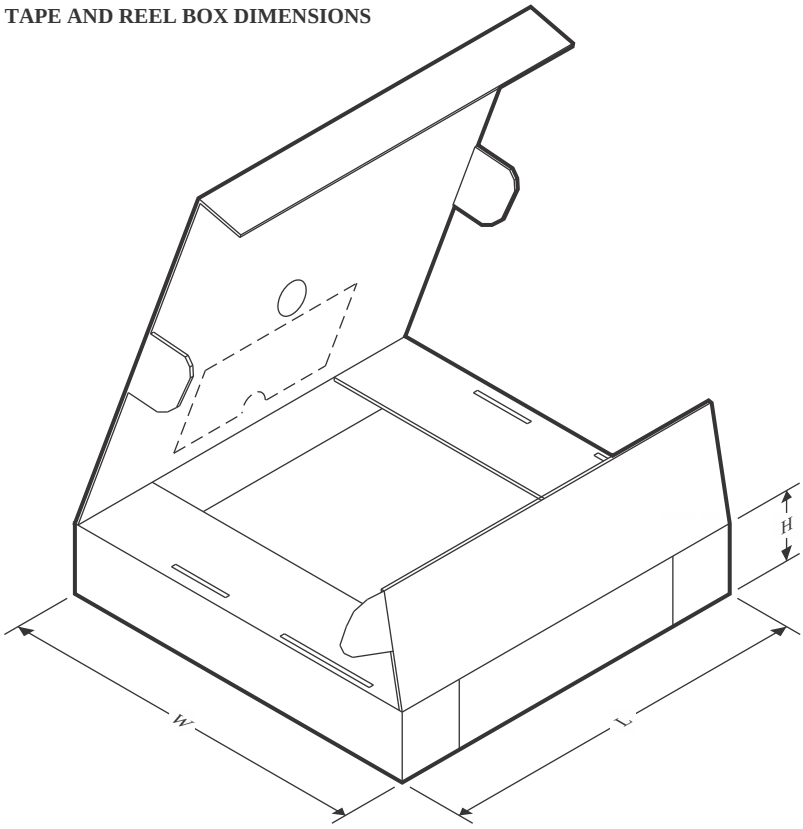

*All dimensions are nominal

Device	Package Type	Package Drawing	Pins	SPQ	Length (mm)	Width (mm)	Height (mm)
TMUX6111PWR	TSSOP	PW	16	2000	356.0	356.0	35.0
TMUX6111RTER	WQFN	RTE	16	3000	367.0	367.0	35.0
TMUX6112PWR	TSSOP	PW	16	2000	356.0	356.0	35.0
TMUX6112PWR	TSSOP	PW	16	2000	356.0	356.0	35.0
TMUX6112RTER	WQFN	RTE	16	3000	367.0	367.0	35.0
TMUX6112RTERG4	WQFN	RTE	16	3000	367.0	367.0	35.0
TMUX6113PWR	TSSOP	PW	16	2000	367.0	367.0	35.0
TMUX6113PWRG4	TSSOP	PW	16	2000	367.0	367.0	35.0
TMUX6113RTER	WQFN	RTE	16	3000	367.0	367.0	35.0

PW0016A

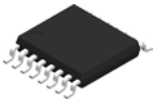

PACKAGE OUTLINE

TSSOP - 1.2 mm max height

SMALL OUTLINE PACKAGE

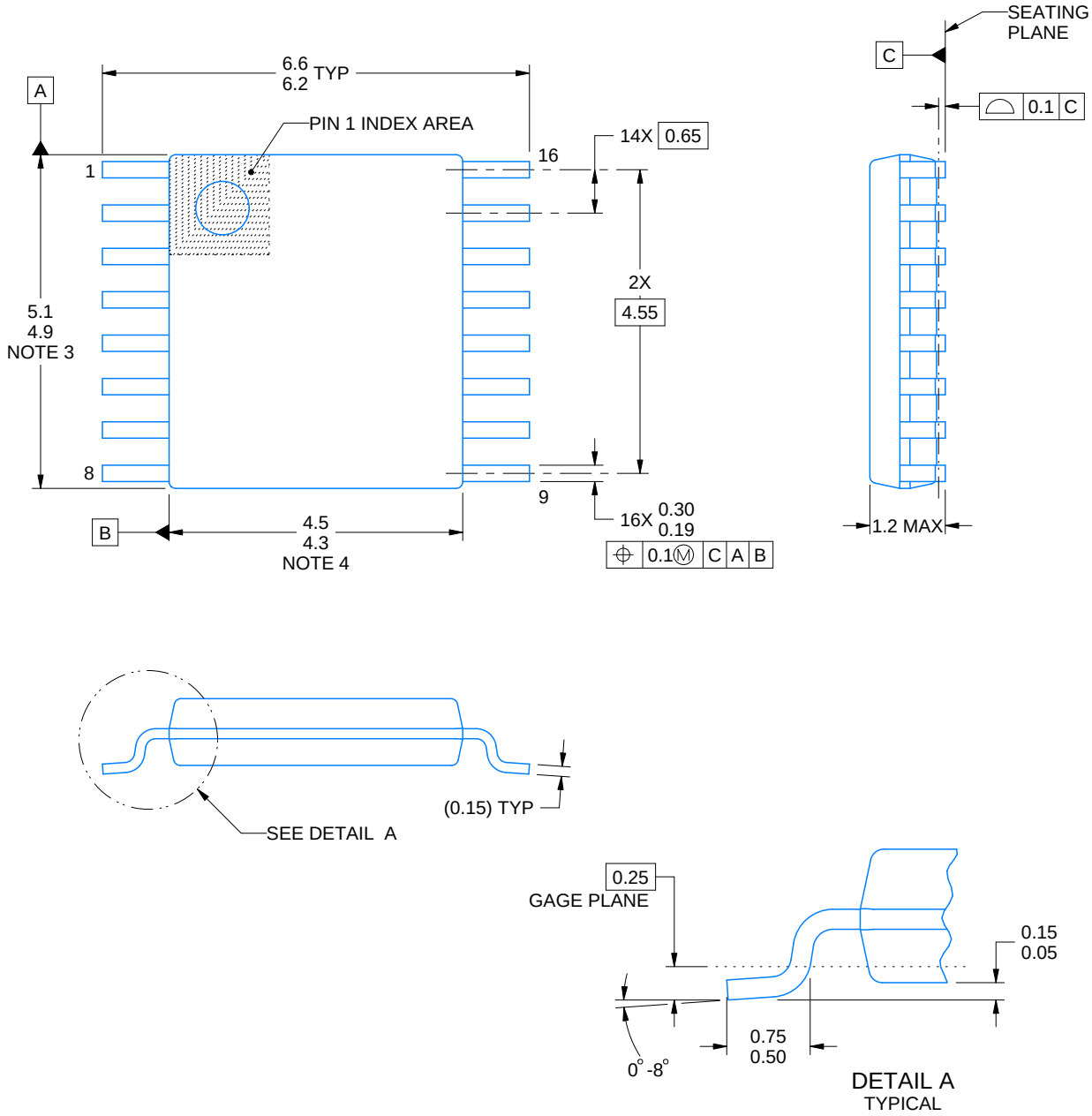

NOTES:

1. All linear dimensions are in millimeters. Any dimensions in parenthesis are for reference only. Dimensioning and tolerancing per ASME Y14.5M.
2. This drawing is subject to change without notice.
3. This dimension does not include mold flash, protrusions, or gate burrs. Mold flash, protrusions, or gate burrs shall not exceed 0.15 mm per side.
4. This dimension does not include interlead flash. Interlead flash shall not exceed 0.25 mm per side.
5. Reference JEDEC registration MO-153.

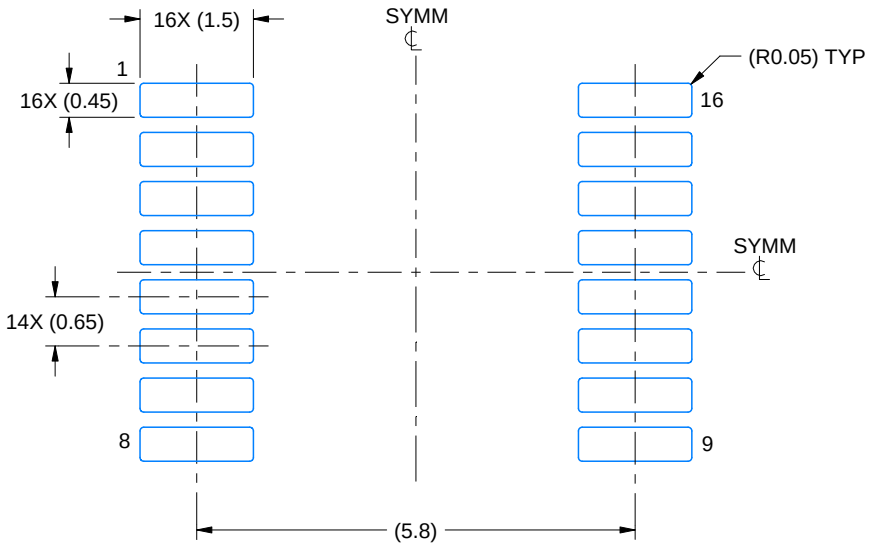

LAND PATTERN EXAMPLE
EXPOSED METAL SHOWN
SCALE: 10X

NON-SOLDER MASK DEFINED (PREFERRED)

SOLDER MASK DEFINED

SOLDER MASK DETAILS

4220204/A 02/2017

NOTES: (continued)

6. Publication IPC-7351 may have alternate designs.
7. Solder mask tolerances between and around signal pads can vary based on board fabrication site.

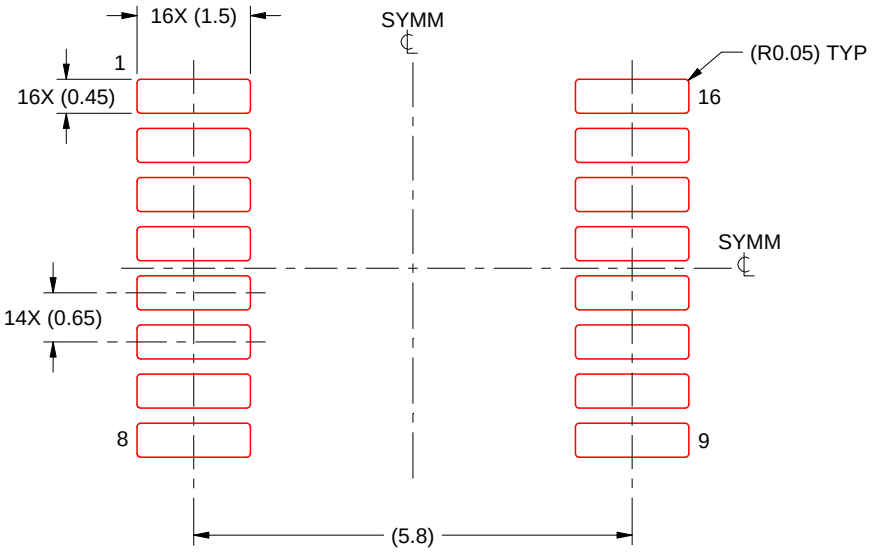

SOLDER PASTE EXAMPLE
BASED ON 0.125 mm THICK STENCIL
SCALE: 10X

4220204/A 02/2017

NOTES: (continued)

8. Laser cutting apertures with trapezoidal walls and rounded corners may offer better paste release. IPC-7525 may have alternate design recommendations.
9. Board assembly site may have different recommendations for stencil design.

GENERIC PACKAGE VIEW

RTE 16

WQFN - 0.8 mm max height

3 x 3, 0.5 mm pitch

PLASTIC QUAD FLATPACK - NO LEAD

This image is a representation of the package family, actual package may vary.
Refer to the product data sheet for package details.

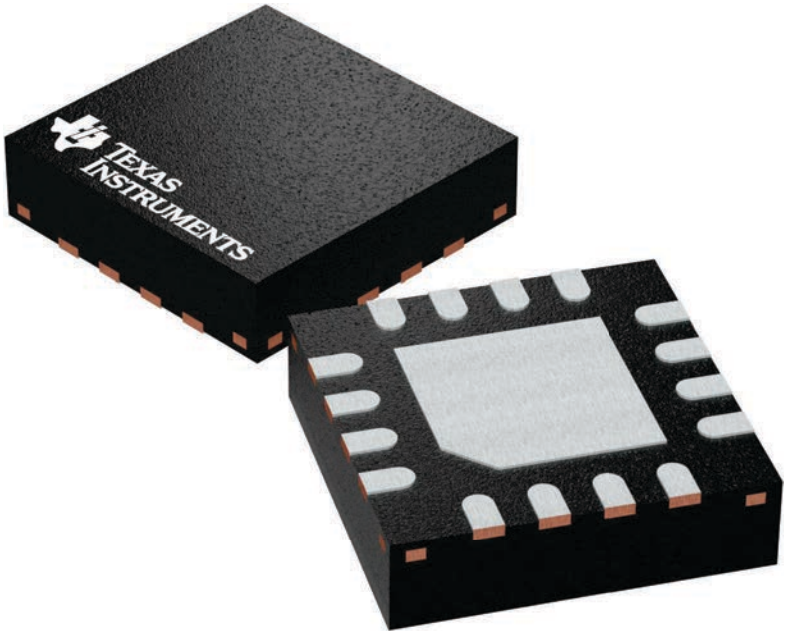

4225944/A

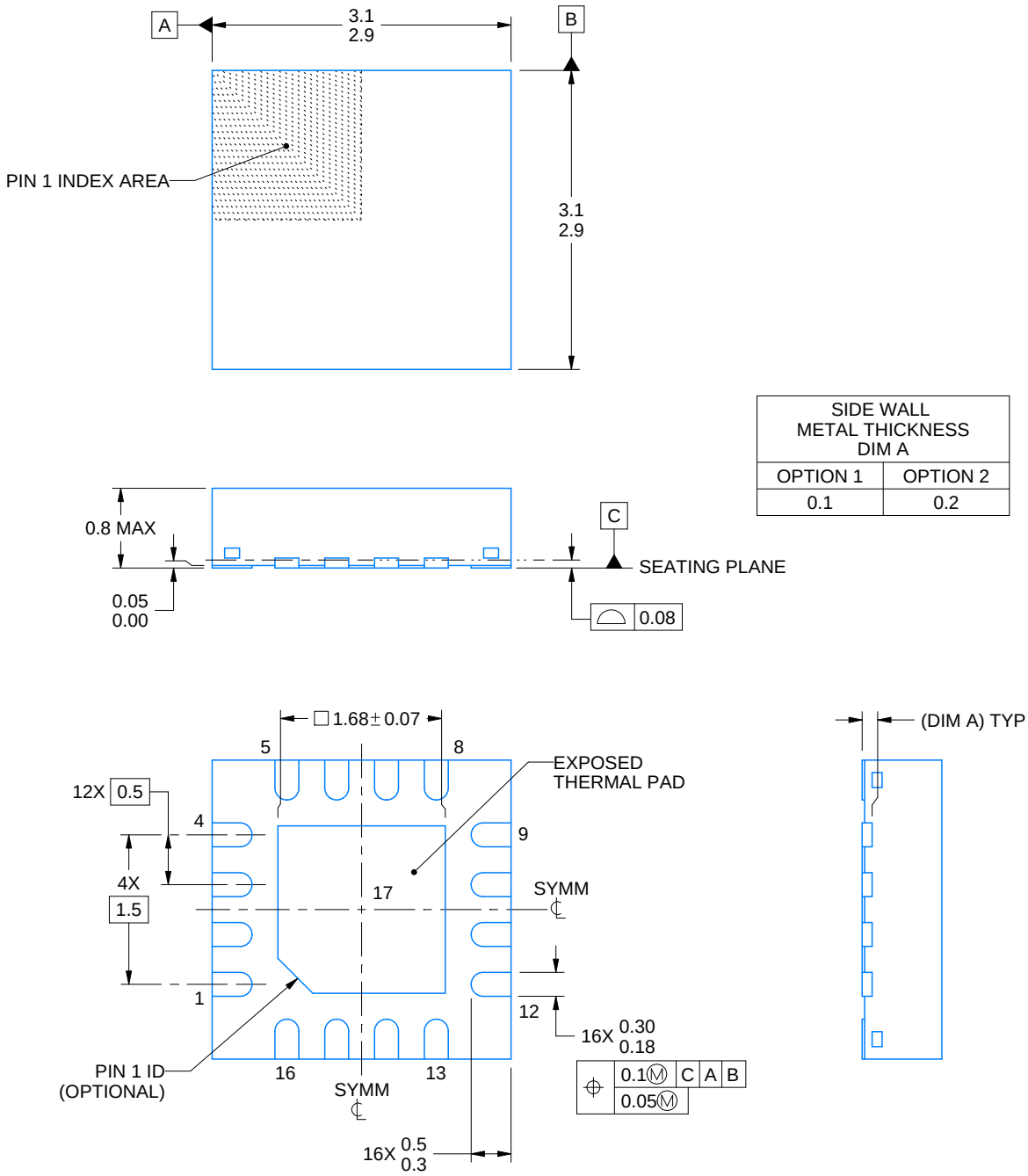

SIDE WALL METAL THICKNESS DIM A	
OPTION 1	OPTION 2
0.1	0.2

NOTES:

1. All linear dimensions are in millimeters. Any dimensions in parenthesis are for reference only. Dimensioning and tolerancing per ASME Y14.5M.
2. This drawing is subject to change without notice.
3. The package thermal pad must be soldered to the printed circuit board for thermal and mechanical performance.

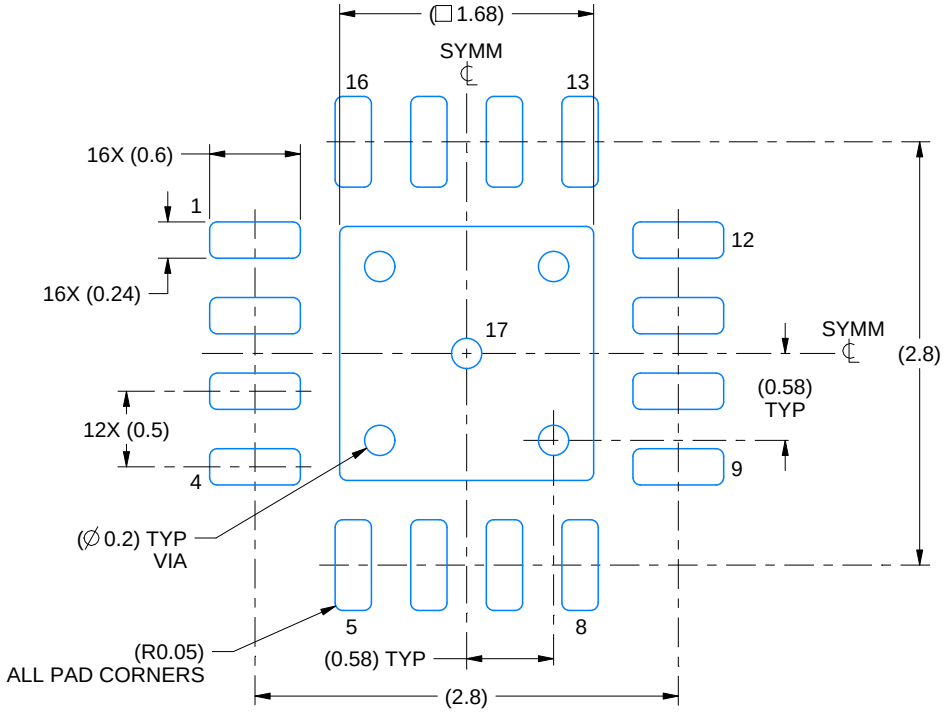

LAND PATTERN EXAMPLE
EXPOSED METAL SHOWN
SCALE:20X

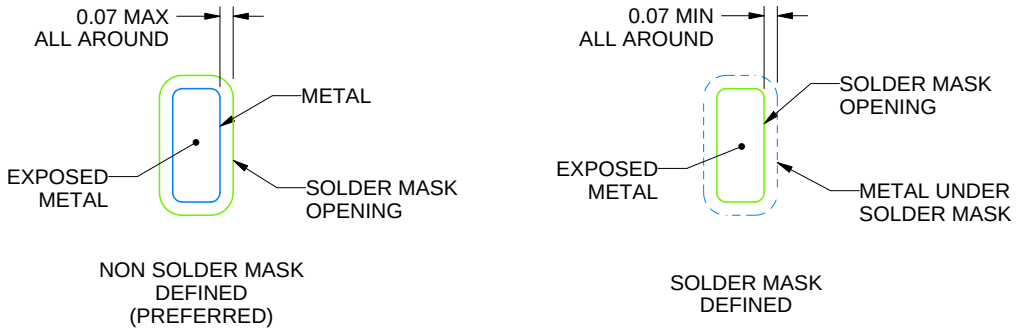

SOLDER MASK DETAILS

4219117/B 04/2022

NOTES: (continued)

4. This package is designed to be soldered to a thermal pad on the board. For more information, see Texas Instruments literature number SLUA271 (www.ti.com/lit/slua271).
5. Vias are optional depending on application, refer to device data sheet. If any vias are implemented, refer to their locations shown on this view. It is recommended that vias under paste be filled, plugged or tented.

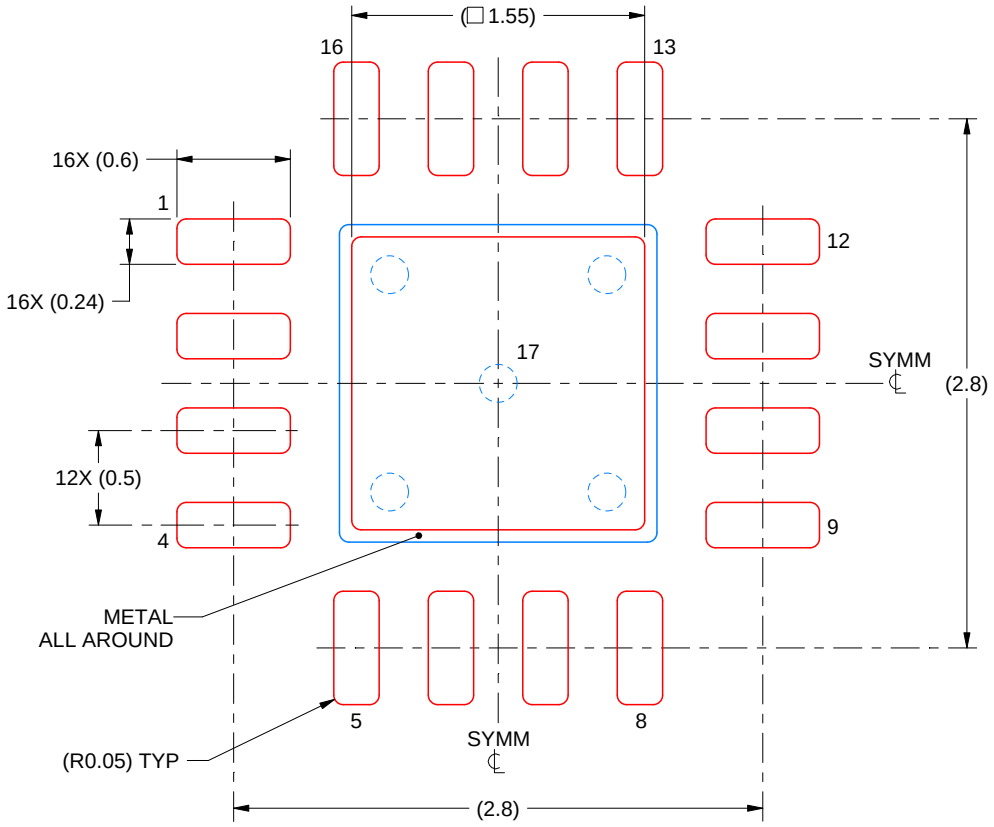

SOLDER PASTE EXAMPLE
BASED ON 0.125 mm THICK STENCIL

EXPOSED PAD 17:
85% PRINTED SOLDER COVERAGE BY AREA UNDER PACKAGE
SCALE:25X

4219117/B 04/2022

NOTES: (continued)

6. Laser cutting apertures with trapezoidal walls and rounded corners may offer better paste release. IPC-7525 may have alternate design recommendations.

IMPORTANT NOTICE AND DISCLAIMER

TI PROVIDES TECHNICAL AND RELIABILITY DATA (INCLUDING DATA SHEETS), DESIGN RESOURCES (INCLUDING REFERENCE DESIGNS), APPLICATION OR OTHER DESIGN ADVICE, WEB TOOLS, SAFETY INFORMATION, AND OTHER RESOURCES “AS IS” AND WITH ALL FAULTS, AND DISCLAIMS ALL WARRANTIES, EXPRESS AND IMPLIED, INCLUDING WITHOUT LIMITATION ANY IMPLIED WARRANTIES OF MERCHANTABILITY, FITNESS FOR A PARTICULAR PURPOSE OR NON-INFRINGEMENT OF THIRD PARTY INTELLECTUAL PROPERTY RIGHTS.

These resources are intended for skilled developers designing with TI products. You are solely responsible for (1) selecting the appropriate TI products for your application, (2) designing, validating and testing your application, and (3) ensuring your application meets applicable standards, and any other safety, security, regulatory or other requirements.

These resources are subject to change without notice. TI grants you permission to use these resources only for development of an application that uses the TI products described in the resource. Other reproduction and display of these resources is prohibited. No license is granted to any other TI intellectual property right or to any third party intellectual property right. TI disclaims responsibility for, and you will fully indemnify TI and its representatives against, any claims, damages, costs, losses, and liabilities arising out of your use of these resources.

TI’s products are provided subject to TI’s Terms of Sale or other applicable terms available either on ti.com or provided in conjunction with such TI products. TI’s provision of these resources does not expand or otherwise alter TI’s applicable warranties or warranty disclaimers for TI products.

TI objects to and rejects any additional or different terms you may have proposed.

Mailing Address: Texas Instruments, Post Office Box 655303, Dallas, Texas 75265
Copyright © 2025, Texas Instruments Incorporated