SN74AXC1T45 Single-Bit Dual-Supply Bus Transceiver With Configurable Voltage Translation

1 Features

- Up and down translation across 0.65 V to 3.6 V
- Operating temperature: –40°C to +125°C
- Designed with glitch suppression circuitry to improve power sequencing performance
- Maximum quiescent current (I_{CCA} + I_{CCB}) of 10µA (85°C maximum) and 16µA (125°C maximum)
- Up to 500Mbps support when translating from 1.8 to 3.3V
- V_{CC} isolation feature:
  - If either V_{CC} input is below 100mV, all I/Os outputs are disabled and become high-impedance
- I_{off} supports partial-power-down mode operation
- Latch-up performance exceeds 100mA per JESD 78, Class II
- ESD protection exceeds JESD 22:
  - 8000-V human body model
  - 1000-V charged-device model

2 Applications

- Enterprise and communications
- Industrial
- Personal electronics

3 Description

The SN74AXC1T45 is a single-bit noninverting bus transceiver that uses two separate configurable power-supply rails. The device is operational with both V_{CCA} and V_{CCB} supplies as low as 0.65 V. The A port is designed to track V_{CCA}, which accepts any supply voltage from 0.65 V to 3.6V. The B port is designed to track V_{CCB}, which also accepts any supply voltage from 0.65 V to 3.6V.

The DIR pin determines the direction of signal propagation. With the DIR pin configured HIGH, translation is from Port A to Port B. With DIR configured LOW, translation is from Port B to Port A. The DIR pin is referenced to V_{CCA}, meaning that its logic-high and logic-low thresholds track with V_{CCA}.

This device is fully specified for partial-power-down applications using the I_{off} current. The I_{off} protection circuitry ensures that no excessive current is drawn from or to an input, output, or combined I/O that is biased to a specific voltage while the device is powered down.

The V_{CC} isolation feature ensures that if either V_{CCA} or V_{CCB} is less than 100mV, both I/O ports enter a high-impedance state by disabling their outputs.

The glitch suppression circuitry enables either supply rail to be powered on or off in any order, providing robust power sequencing performance.

Device Information

PART NUMBER(1)	PACKAGE	PACKAGE SIZE(2)
SN74AXC1T45	DBV (SOT-23, 6)	2.9mm × 2.8mm
	DCK (SC70, 6)	2mm × 2.1mm
	DRL (SOT-5X3, 6)	1.6mm × 1.6mm
	DEA (X2SON, 6)	1mm × 1mm
	DTQ (X2SON, 6)	1mm × 0.8mm

(1) For more information, see Section 11
(2) The package size (length × width) is a nominal value and includes pins, where applicable.

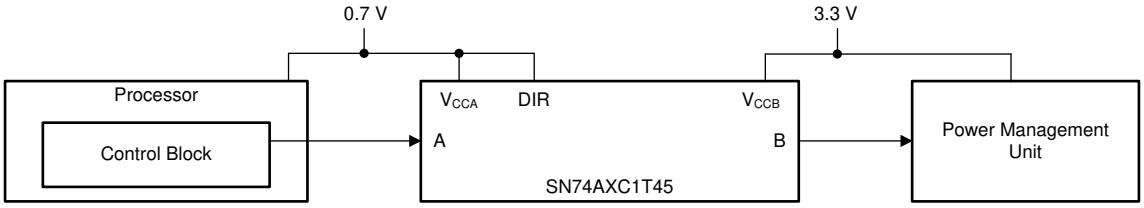

Simplified Schematic

An IMPORTANT NOTICE at the end of this data sheet addresses availability, warranty, changes, use in safety-critical applications, intellectual property matters and other important disclaimers. PRODUCTION DATA.

Table of Contents

1 Features....1
2 Applications....1
3 Description....1
4 Pin Configuration and Functions....3
5 Specifications....4
5.1 Absolute Maximum Ratings....4
5.2 ESD Ratings....4
5.3 Recommended Operating Conditions....5
5.4 Thermal Information....5
5.5 Electrical Characteristics....6
5.6 Switching Characteristics....7
5.7 Operating Characteristics: T_A = 25°C....11
5.8 Typical Characteristics....12
6 Parameter Measurement Information....15
6.1 Load Circuit and Voltage Waveforms....15
7 Detailed Description....17
7.1 Overview....17
7.2 Functional Block Diagram....17
7.3 Feature Description....17
7.4 Device Functional Modes....18
8 Application and Implementation....19
8.1 Application Information....19
8.2 Typical Applications....19
8.3 Power Supply Recommendations....22
8.4 Layout....22
9 Device and Documentation Support....24
9.1 Documentation Support....24
9.2 Receiving Notification of Documentation Updates....24
9.3 Support Resources....24
9.4 Trademarks....24
9.5 Electrostatic Discharge Caution....24
9.6 Glossary....24
10 Revision History....24
11 Mechanical, Packaging, and Orderable Information....25

Copyright © 2024 Texas Instruments Incorporated

4 Pin Configuration and Functions

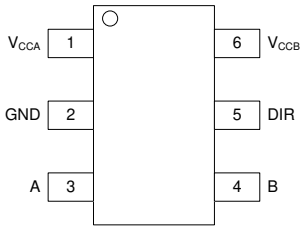

Figure 4-1. DBV Package 6-Pin SOT-23 (Top View)

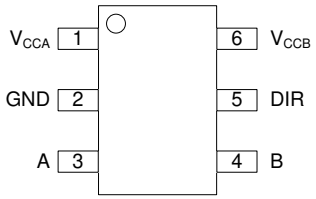

Figure 4-2. DCK Package 6-Pin SC70 (Top View)

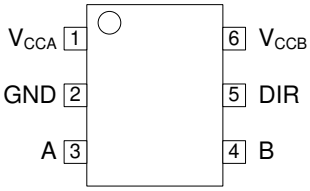

Figure 4-3. DRL Package 6-Pin SOT-5X3 (Top View)

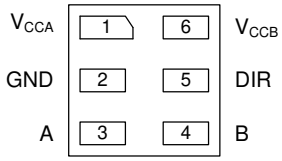

Figure 4-4. DEA Package 6-Pin X2SON (Transparent Top View)

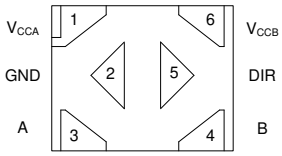

Figure 4-5. DTQ Package 6-Pin X2SON (Transparent Top View)

Table 4-1. Pin Functions

PIN		TYPE	DESCRIPTION
NAME	NO.		
A	3	I/O	Input or output A. This pin is referenced to V_{CCA}. When this pin is configured as an input, do not leave it floating.
B	4	I/O	Input or output B. This pin is referenced to V_{CCB}. When this pin is configured as an input, do not leave it floating.
DIR	5	I	Direction control signal. Set to Logic High for A-to-B level translation. Set to Logic Low for B-to-A level translation.
GND	2	—	Ground.
V_{CCA}	1	—	A-port supply voltage. 0.65 V ≤ V_{CCA} ≤ 3.6V.
V_{CCB}	6	—	B-port supply voltage. 0.65 V ≤ V_{CCB} ≤ 3.6V.

Copyright © 2024 Texas Instruments Incorporated

5 Specifications

5.1 Absolute Maximum Ratings

over operating free-air temperature range (unless otherwise noted)[1]

			MIN	MAX	UNIT
V_{CCA}	Supply voltage A		–0.5	4.2	V
V_{CCB}	Supply voltage B		–0.5	4.2	V
V_I	Input Voltage[2]	I/O Ports (A Port)	–0.5	4.2	V
		I/O Ports (B Port)	–0.5	4.2	
		Control Inputs	–0.5	4.2	
V_O	Voltage applied to any output in the high-impedance or power-off state[2]	A Port	–0.5	4.2	V
		B Port	–0.5	4.2	
V_O	Voltage applied to any output in the high or low state[2] [3]	A Port	–0.5	V_{CCA} + 0.2	V
		B Port	–0.5	V_{CCB} + 0.2	
I_{IK}	Input clamp current	V_I < 0	–50		mA
I_{OK}	Output clamp current	V_O < 0	–50		mA
I_O	Continuous output current		–50	50	mA
	Continuous current through V_{CC} or GND		–100	100	mA
T_J	Junction Temperature			150	°C
T_{STG}	Storage temperature		–65	150	°C

(1) Stresses beyond those listed under *Absolute Maximum Ratings* may cause permanent damage to the device. These are stress ratings only, which do not imply functional operation of the device at these or any other conditions beyond those indicated under *Recommended Operating Conditions*. Exposure to absolute-maximum-rated conditions for extended periods may affect device reliability.
(2) The input voltage and output negative-voltage ratings may be exceeded if the input and output current ratings are observed.
(3) The output positive-voltage rating may be exceeded up to 4.2V maximum if the output current rating is observed.

5.2 ESD Ratings

		VALUE	UNIT
$V_{(ESD)}$ Electrostatic discharge	Human-body model (HBM), per ANSI/ESDA/JEDEC JS-001[1]	±8000	V
	Charged-device model (CDM), per JEDEC specification JESD22-C101[2]	±1000	

(1) JEDEC document JEP155 states that 500-V HBM allows safe manufacturing with a standard ESD control process.
(2) JEDEC document JEP157 states that 250-V CDM allows safe manufacturing with a standard ESD control process.

Copyright © 2024 Texas Instruments Incorporated

5.3 Recommended Operating Conditions

over operating free-air temperature range (unless otherwise noted)[(1) (2) (3)]

				MIN	MAX	UNIT
V_{CCA}	Supply voltage A			0.65	3.6	V
V_{CCB}	Supply voltage B			0.65	3.6	V
V_{IH}	High-level input voltage	Data Inputs	V_{CCI} = 0.65 V - 0.75 V	V_{CCI} x 0.70		V
			V_{CCI} = 0.76 V - 1V	V_{CCI} x 0.70		
			V_{CCI} = 1.1V - 1.95 V	V_{CCI} x 0.65		
			V_{CCI} = 2.3V - 2.7V	1.6		
			V_{CCI} = 3V - 3.6V	2		
		Control Input (DIR) Referenced to V_{CCA}	V_{CCA} = 0.65 V - 0.75 V	V_{CCA} x 0.70		
			V_{CCA} = 0.76 V - 1V	V_{CCA} x 0.70		
			V_{CCA} = 1.1V - 1.95 V	V_{CCA} x 0.65		
			V_{CCA} = 2.3V - 2.7V	1.6		
			V_{CCA} = 3V - 3.6V	2		
V_{IL}	Low-level input voltage	Data Inputs	V_{CCI} = 0.65 V - 0.75 V		V_{CCI} x 0.30	V
			V_{CCI} = 0.76 V - 1V		V_{CCI} x 0.30	
			V_{CCI} = 1.1V - 1.95 V		V_{CCI} x 0.35	
			V_{CCI} = 2.3V - 2.7V		0.7	
			V_{CCI} = 3V - 3.6V		0.8	
		Control Input (DIR) Referenced to V_{CCA}	V_{CCA} = 0.65 V - 0.75 V		V_{CCA} x 0.30	
			V_{CCA} = 0.76 V - 1V		V_{CCA} x 0.30	
			V_{CCA} = 1.1V - 1.95 V		V_{CCA} x 0.35	
			V_{CCA} = 2.3V - 2.7V		0.7	
			V_{CCA} = 3V - 3.6V		0.8	
V_I	Input voltage [(3)]			0	3.6	V
V_O	Output voltage	Active State		0	V_{CCO}	V
		Tri-State		0	3.6	
Δt/Δv	Input transition rate				100	ns/V
T_A	Operating free-air temperature			–40	125	°C

(1) VCCI is the VCC associated with the input port.
(2) VCCO is the VCC associated with the output port.
(3) All unused inputs of the device must be held at VCC or GND to ensure proper device operation. Refer to the TI application report, Implications of Slow or Floating CMOS Inputs.

5.4 Thermal Information

THERMAL METRIC[(1)]		SN74AXC1T45					UNIT
		DBV (SOT-23)	DCK (SC70)	DRL (SOT-5X3)	DEA (X2SON)	DTQ (X2SON)	
		6 PINS	6 PINS	6 PINS	6 PINS	6 PINS	
$R_{\theta JA}$	Junction-to-ambient thermal resistance	202.2	235.3	298.9	358.0	327.8	°C/W
$R_{\theta JC(top)}$	Junction-to-case (top) thermal resistance	137.2	160.5	148.4	201.0	194.9	°C/W
$R_{\theta JB}$	Junction-to-board thermal resistance	80.2	76.9	165.0	221.8	248.4	°C/W
ψ_{JT}	Junction-to-top characterization parameter	64.0	59.7	20.7	26.1	24.1	°C/W
ψ_{JB}	Junction-to-board characterization parameter	80.4	77.1	164.9	220.8	247.6	°C/W

(1) For more information about traditional and new thermal metrics, see the *Semiconductor and IC Package Thermal Metrics* application report.

5.5 Electrical Characteristics

over operating free-air temperature range (unless otherwise noted) [(1)] [(2)]

PARAMETER		TEST CONDITIONS		V_{CCA}	V_{CCB}	Operating free-air temperature (T_A)						UNIT
						–40°C to 85°C			–40°C to 125°C			
						MIN	TYP[(3)]	MAX	MIN	TYP	MAX	
V_{OH}	High-level output voltage	$V_I = V_{IH}$	I_{OH} = -100µA	0.7V - 3.6V	0.7V - 3.6V	V_{CCO} – 0.1			V_{CCO} – 0.1			V
			I_{OH} = -50µA	0.65 V	0.65 V	0.55			0.55			
			I_{OH} = -200µA	0.76 V	0.76 V	0.58			0.58			
			I_{OH} = -500µA	0.85 V	0.85 V	0.65			0.65			
			I_{OH} = -3mA	1.1V	1.1V	0.85			0.85			
			I_{OH} = -6mA	1.4V	1.4V	1.05			1.05			
			I_{OH} = -8mA	1.65 V	1.65 V	1.2			1.2			
			I_{OH} = -9mA	2.3V	2.3V	1.75			1.75			
			I_{OH} = -12mA	3V	3V	2.3			2.3			
V_{OL}	Low-level output voltage	$V_I = V_{IL}$	I_{OL} = 100µA	0.7V - 3.6V	0.7V - 3.6V			0.1			0.1	V
			I_{OL} = 50µA	0.65 V	0.65 V			0.1			0.1	
			I_{OL} = 200µA	0.76 V	0.76 V			0.18			0.18	
			I_{OL} = 500µA	0.85 V	0.85 V			0.2			0.2	
			I_{OL} = 3mA	1.1V	1.1V			0.25			0.25	
			I_{OL} = 6mA	1.4V	1.4V			0.35			0.35	
			I_{OL} = 8mA	1.65 V	1.65 V			0.45			0.45	
			I_{OL} = 9mA	2.3V	2.3V			0.55			0.55	
			I_{OL} = 12mA	3V	3V			0.7			0.7	
I_I	Input leakage current	Control input (DIR): V_I = V_{CCA} or GND		0.65 V- 3.6V	0.65 V- 3.6V	–1		1	–1.5		1.5	µA
		A or B Port: Vi = V_{CCI} or GND		0.65 V- 3.6V	0.65 V- 3.6V	–4		4	–8		8	
I_{off}	Partial power down current	A or B Port: Vi or Vo = 0V - 3.6V		0V	0V - 3.6V	–5		5	–7.5		7.5	µA
				0V - 3.6V	0V	–5		5	–7.5		7.5	
I_{CCA}	V_{CCA} supply current	$V_I = V_{CCI}$ or GND	$I_O = 0$	0.65 V- 3.6V	0.65 V- 3.6V			8			12	µA
				0V	3.6V	–2			–8			
				3.6V	0V			2			8	
I_{CCB}	V_{CCB} supply current	$V_I = V_{CCI}$ or GND	$I_O = 0$	0.65 V- 3.6V	0.65 V- 3.6V			8			12	µA
				0V	3.6V			2			8	
				3.6V	0V	–2			–8			
I_{CCA} + I_{CCB}	Combined supply current	$V_I = V_{CCI}$ or GND	$I_O = 0$	0.65 V- 3.6V	0.65 V- 3.6V			10			16	µA
C_I	Control input capacitance	V_I = 3.3V or GND		3.3V	3.3V		4.4			4.4		pF
C_{IO}	Data I/O capacitance, A Port	V_O = 1.65V DC +1 MHz -16 dBm sine wave		3.3V	0V		5			5		pF
C_{IO}	Data I/O capacitance, B Port	V_O = 1.65V DC +1 MHz -16 dBm sine wave		0V	3.3V		5			5		pF

(1) VCCI is the VCC associated with the input port.
(2) VCCO is the VCC associated with the output port.
(3) All typical data is taken at 25°C.

Copyright © 2024 Texas Instruments Incorporated

5.6 Switching Characteristics

Table 5-1. Switching Characteristics, V_{CCA} = 0.7V

PARAMETER		FROM	TO	TEST CONDITIONS	B–PORT SUPPLY VOLTAGE (V_{CCB})																UNIT
					0.7 ± 0.05 V		0.8 ± 0.04 V		0.9 ± 0.045 V		1.2 ± 0.1V		1.5 ± 0.1V		1.8 ± 0.15 V		2.5 ± 0.2V		3.3 ± 0.3V		
					MIN	MAX	MIN	MAX	MIN	MAX	MIN	MAX	MIN	MAX	MIN	MAX	MIN	MAX	MIN	MAX	
t_{pd}	Propagation delay	A	B	–40°C to 85°C	0.5	173	0.5	117	0.5	85	0.5	51	0.5	50	0.5	53	0.5	65	0.5	143	ns
				–40°C to 125°C	0.5	173	0.5	117	0.5	85	0.5	51	0.5	50	0.5	53	0.5	65	0.5	143	
		B	A	–40°C to 85°C	0.5	173	0.5	154	0.5	127	0.5	88	0.5	83	0.5	82	0.5	80	0.5	80	
				–40°C to 125°C	0.5	173	0.5	154	0.5	127	0.5	88	0.5	83	0.5	82	0.5	80	0.5	80	
t_{dis}	Disable time	DIR	A	–40°C to 85°C	0.5	143	0.5	143	0.5	143	0.5	143	0.5	143	0.5	143	0.5	143	0.5	143	ns
				–40°C to 125°C	0.5	143	0.5	143	0.5	143	0.5	143	0.5	143	0.5	143	0.5	143	0.5	143	
		DIR	B	–40°C to 85°C	0.5	163	0.5	123	0.5	100	0.5	50	0.5	45	0.5	49	0.5	61	0.5	109	
				–40°C to 125°C	0.5	163	0.5	123	0.5	100	0.5	50	0.5	45	0.5	49	0.5	61	0.5	109	
t_{en}	Enable time	DIR	A	–40°C to 85°C	0.5	389	0.5	331	0.5	287	0.5	143	0.5	134	0.5	137	0.5	147	0.5	200	ns
				–40°C to 125°C	0.5	406	0.5	333	0.5	287	0.5	143	0.5	134	0.5	137	0.5	147	0.5	200	
		DIR	B	–40°C to 85°C	0.5	369	0.5	313	0.5	281	0.5	247	0.5	246	0.5	249	0.5	261	0.5	339	
				–40°C to 125°C	0.5	395	0.5	339	0.5	307	0.5	273	0.5	272	0.5	275	0.5	287	0.5	365	

Table 5-2. Switching Characteristics, V_{CCA} = 0.8V

PARAMETER		FROM	TO	TEST CONDITIONS	B–PORT SUPPLY VOLTAGE (V_{CCB})																UNIT
					0.7 ± 0.05 V		0.8 ± 0.04 V		0.9 ± 0.045 V		1.2 ± 0.1V		1.5 ± 0.1V		1.8 ± 0.15 V		2.5 ± 0.2V		3.3 ± 0.3V		
					MIN	MAX	MIN	MAX	MIN	MAX	MIN	MAX	MIN	MAX	MIN	MAX	MIN	MAX	MIN	MAX	
t_{pd}	Propagation delay	A	B	–40°C to 85°C	0.5	153	0.5	95	0.5	64	0.5	33	0.5	27	0.5	26	0.5	27	0.5	36	ns
				–40°C to 125°C	0.5	153	0.5	95	0.5	64	0.5	33	0.5	27	0.5	26	0.5	27	0.5	36	
		B	A	–40°C to 85°C	0.5	117	0.5	96	0.5	78	0.5	52	0.5	42	0.5	41	0.5	40	0.5	39	
				–40°C to 125°C	0.5	117	0.5	96	0.5	78	0.5	52	0.5	42	0.5	41	0.5	40	0.5	39	
t_{dis}	Disable time	DIR	A	–40°C to 85°C	0.5	100	0.5	100	0.5	100	0.5	100	0.5	100	0.5	100	0.5	100	0.5	100	ns
				–40°C to 125°C	0.5	100	0.5	100	0.5	100	0.5	100	0.5	100	0.5	100	0.5	100	0.5	100	
		DIR	B	–40°C to 85°C	0.5	151	0.5	111	0.5	88	0.5	38	0.5	32	0.5	30	0.5	30	0.5	38	
				–40°C to 125°C	0.5	151	0.5	111	0.5	88	0.5	38	0.5	32	0.5	30	0.5	30	0.5	38	
t_{en}	Enable time	DIR	A	–40°C to 85°C	0.5	321	0.5	261	0.5	226	0.5	96	0.5	80	0.5	78	0.5	76	0.5	87	ns
				–40°C to 125°C	0.5	341	0.5	266	0.5	229	0.5	97	0.5	80	0.5	78	0.5	76	0.5	87	
		DIR	B	–40°C to 85°C	0.5	309	0.5	251	0.5	220	0.5	189	0.5	183	0.5	182	0.5	183	0.5	192	
				–40°C to 125°C	0.5	317	0.5	259	0.5	228	0.5	197	0.5	191	0.5	190	0.5	191	0.5	200	

Copyright © 2024 Texas Instruments Incorporated

Table 5-3. Switching Characteristics, V_{CCA} = 0.9V

PARAMETER		FROM	TO	TEST CONDITIONS	B–PORT SUPPLY VOLTAGE (V_{CCB})																UNIT
					0.7 ± 0.05 V		0.8 ± 0.04 V		0.9 ± 0.045 V		1.2 ± 0.1V		1.5 ± 0.1V		1.8 ± 0.15 V		2.5 ± 0.2V		3.3 ± 0.3V		
					MIN	MAX	MIN	MAX	MIN	MAX	MIN	MAX	MIN	MAX	MIN	MAX	MIN	MAX	MIN	MAX	
t_{pd}	Propagation delay	A	B	–40°C to 85°C	0.5	126	0.5	78	0.5	52	0.5	23	0.5	18	0.5	16	0.5	15	0.5	18	ns
				–40°C to 125°C	0.5	126	0.5	78	0.5	52	0.5	23	0.5	18	0.5	16	0.5	15	0.5	18	
		B	A	–40°C to 85°C	0.5	85	0.5	64	0.5	53	0.5	40	0.5	28	0.5	24	0.5	22	0.5	21	
				–40°C to 125°C	0.5	85	0.5	64	0.5	53	0.5	40	0.5	28	0.5	24	0.5	22	0.5	21	
t_{dis}	Disable time	DIR	A	–40°C to 85°C	0.5	75	0.5	75	0.5	75	0.5	75	0.5	75	0.5	75	0.5	75	0.5	75	ns
				–40°C to 125°C	0.5	79	0.5	79	0.5	79	0.5	79	0.5	79	0.5	79	0.5	79	0.5	79	
		DIR	B	–40°C to 85°C	0.5	144	0.5	105	0.5	82	0.5	32	0.5	25	0.5	24	0.5	21	0.5	23	
				–40°C to 125°C	0.5	144	0.5	105	0.5	83	0.5	36	0.5	28	0.5	26	0.5	21	0.5	23	
t_{en}	Enable time	DIR	A	–40°C to 85°C	0.5	282	0.5	223	0.5	195	0.5	77	0.5	59	0.5	54	0.5	48	0.5	54	ns
				–40°C to 125°C	0.5	304	0.5	229	0.5	199	0.5	81	0.5	62	0.5	56	0.5	49	0.5	54	
		DIR	B	–40°C to 85°C	0.5	262	0.5	214	0.5	188	0.5	159	0.5	154	0.5	152	0.5	151	0.5	154	
				–40°C to 125°C	0.5	269	0.5	221	0.5	195	0.5	166	0.5	161	0.5	159	0.5	158	0.5	161	

Table 5-4. Switching Characteristics, V_{CCA} = 1.2V

PARAMETER		FROM	TO	TEST CONDITIONS	B–PORT SUPPLY VOLTAGE (V_{CCB})																UNIT
					0.7 ± 0.05 V		0.8 ± 0.04 V		0.9 ± 0.045 V		1.2 ± 0.1V		1.5 ± 0.1V		1.8 ± 0.15 V		2.5 ± 0.2V		3.3 ± 0.3V		
					MIN	MAX	MIN	MAX	MIN	MAX	MIN	MAX	MIN	MAX	MIN	MAX	MIN	MAX	MIN	MAX	
t_{pd}	Propagation delay	A	B	–40°C to 85°C	0.5	87	0.5	52	0.5	39	0.5	15	0.5	9	0.5	8	0.5	7	0.5	7	ns
				–40°C to 125°C	0.5	87	0.5	52	0.5	39	0.5	15	0.5	10	0.5	9	0.5	7	0.5	8	
		B	A	–40°C to 85°C	0.5	51	0.5	33	0.5	23	0.5	15	0.5	12	0.5	10	0.5	7	0.5	7	
				–40°C to 125°C	0.5	51	0.5	33	0.5	23	0.5	15	0.5	12	0.5	10	0.5	8	0.5	7	
t_{dis}	Disable time	DIR	A	–40°C to 85°C	0.5	22	0.5	22	0.5	22	0.5	22	0.5	22	0.5	22	0.5	22	0.5	22	ns
				–40°C to 125°C	0.5	29	0.5	29	0.5	29	0.5	29	0.5	29	0.5	29	0.5	29	0.5	29	
		DIR	B	–40°C to 85°C	0.5	137	0.5	98	0.5	74	0.5	24	0.5	18	0.5	16	0.5	13	0.5	13	
				–40°C to 125°C	0.5	137	0.5	98	0.5	78	0.5	30	0.5	23	0.5	21	0.5	17	0.5	16	
t_{en}	Enable time	DIR	A	–40°C to 85°C	0.5	240	0.5	185	0.5	157	0.5	45	0.5	36	0.5	33	0.5	26	0.5	29	ns
				–40°C to 125°C	0.5	265	0.5	193	0.5	164	0.5	51	0.5	41	0.5	37	0.5	30	0.5	32	
		DIR	B	–40°C to 85°C	0.5	115	0.5	80	0.5	67	0.5	43	0.5	37	0.5	36	0.5	35	0.5	35	
				–40°C to 125°C	0.5	121	0.5	86	0.5	73	0.5	49	0.5	44	0.5	43	0.5	41	0.5	42	

Copyright © 2024 Texas Instruments Incorporated

Table 5-5. Switching Characteristics, V_{CCA} = 1.5V

PARAMETER		FROM	TO	TEST CONDITIONS	B–PORT SUPPLY VOLTAGE (V_{CCB})																UNIT
					0.7 ± 0.05 V		0.8 ± 0.04 V		0.9 ± 0.045 V		1.2 ± 0.1V		1.5 ± 0.1V		1.8 ± 0.15 V		2.5 ± 0.2V		3.3 ± 0.3V		
					MIN	MAX	MIN	MAX	MIN	MAX	MIN	MAX	MIN	MAX	MIN	MAX	MIN	MAX	MIN	MAX	
t_{pd}	Propagation delay	A	B	–40°C to 85°C	0.5	83	0.5	42	0.5	28	0.5	12	0.5	8	0.5	7	0.5	5	0.5	5	ns
				–40°C to 125°C	0.5	83	0.5	42	0.5	28	0.5	12	0.5	9	0.5	8	0.5	6	0.5	6	
		B	A	–40°C to 85°C	0.5	50	0.5	28	0.5	18	0.5	10	0.5	8	0.5	7	0.5	5	0.5	4	
				–40°C to 125°C	0.5	50	0.5	28	0.5	18	0.5	10	0.5	9	0.5	8	0.5	6	0.5	5	
t_{dis}	Disable time	DIR	A	–40°C to 85°C	0.5	15	0.5	15	0.5	15	0.5	15	0.5	15	0.5	15	0.5	15	0.5	15	ns
				–40°C to 125°C	0.5	20	0.5	20	0.5	20	0.5	20	0.5	20	0.5	20	0.5	20	0.5	20	
		DIR	B	–40°C to 85°C	0.5	136	0.5	96	0.5	72	0.5	22	0.5	16	0.5	14	0.5	11	0.5	11	
				–40°C to 125°C	0.5	136	0.5	96	0.5	76	0.5	29	0.5	21	0.5	19	0.5	15	0.5	14	
t_{en}	Enable time	DIR	A	–40°C to 85°C	0.5	238	0.5	178	0.5	151	0.5	38	0.5	30	0.5	28	0.5	22	0.5	24	ns
				–40°C to 125°C	0.5	263	0.5	186	0.5	157	0.5	44	0.5	36	0.5	33	0.5	26	0.5	27	
		DIR	B	–40°C to 85°C	0.5	104	0.5	63	0.5	49	0.5	33	0.5	29	0.5	28	0.5	26	0.5	26	
				–40°C to 125°C	0.5	109	0.5	68	0.5	54	0.5	38	0.5	35	0.5	34	0.5	32	0.5	32	

Table 5-6. Switching Characteristics, V_{CCA} = 1.8V

PARAMETER		FROM	TO	TEST CONDITIONS	B–PORT SUPPLY VOLTAGE (V_{CCB})																UNIT
					0.7 ± 0.05 V		0.8 ± 0.04 V		0.9 ± 0.045 V		1.2 ± 0.1V		1.5 ± 0.1V		1.8 ± 0.15 V		2.5 ± 0.2V		3.3 ± 0.3V		
					MIN	MAX	MIN	MAX	MIN	MAX	MIN	MAX	MIN	MAX	MIN	MAX	MIN	MAX	MIN	MAX	
t_{pd}	Propagation delay	A	B	–40°C to 85°C	0.5	81	0.5	41	0.5	24	0.5	10	0.5	7	0.5	6	0.5	5	0.5	4	ns
				–40°C to 125°C	0.5	81	0.5	41	0.5	24	0.5	10	0.5	8	0.5	7	0.5	5	0.5	5	
		B	A	–40°C to 85°C	0.5	53	0.5	26	0.5	16	0.5	8	0.5	7	0.5	6	0.5	5	0.5	4	
				–40°C to 125°C	0.5	53	0.5	26	0.5	16	0.5	9	0.5	7	0.5	7	0.5	5	0.5	4	
t_{dis}	Disable time	DIR	A	–40°C to 85°C	0.5	13	0.5	13	0.5	13	0.5	13	0.5	13	0.5	13	0.5	13	0.5	13	ns
				–40°C to 125°C	0.5	18	0.5	18	0.5	18	0.5	18	0.5	18	0.5	18	0.5	18	0.5	18	
		DIR	B	–40°C to 85°C	0.5	136	0.5	96	0.5	72	0.5	22	0.5	15	0.5	14	0.5	11	0.5	11	
				–40°C to 125°C	0.5	136	0.5	96	0.5	75	0.5	28	0.5	20	0.5	18	0.5	14	0.5	13	
t_{en}	Enable time	DIR	A	–40°C to 85°C	0.5	241	0.5	176	0.5	148	0.5	35	0.5	28	0.5	26	0.5	21	0.5	24	ns
				–40°C to 125°C	0.5	266	0.5	184	0.5	155	0.5	42	0.5	33	0.5	32	0.5	24	0.5	26	
		DIR	B	–40°C to 85°C	0.5	101	0.5	61	0.5	44	0.5	30	0.5	27	0.5	26	0.5	25	0.5	24	
				–40°C to 125°C	0.5	105	0.5	65	0.5	48	0.5	34	0.5	32	0.5	31	0.5	29	0.5	29	

Copyright © 2024 Texas Instruments Incorporated

Table 5-7. Switching Characteristics, V_{CCA} = 2.5V

PARAMETER		FROM	TO	TEST CONDITIONS	B–PORT SUPPLY VOLTAGE (V_{CCB})																UNIT
					0.7 ± 0.05 V		0.8 ± 0.04 V		0.9 ± 0.045 V		1.2 ± 0.1V		1.5 ± 0.1V		1.8 ± 0.15 V		2.5 ± 0.2V		3.3 ± 0.3V		
					MIN	MAX	MIN	MAX	MIN	MAX	MIN	MAX	MIN	MAX	MIN	MAX	MIN	MAX	MIN	MAX	
t_{pd}	Propagation delay	A	B	–40°C to 85°C	0.5	80	0.5	40	0.5	22	0.5	7	0.5	5	0.5	5	0.5	4	0.5	4	ns
				–40°C to 125°C	0.5	80	0.5	40	0.5	22	0.5	8	0.5	6	0.5	5	0.5	5	0.5	4	
		B	A	–40°C to 85°C	0.5	66	0.5	27	0.5	15	0.5	7	0.5	5	0.5	5	0.5	4	0.5	3	
				–40°C to 125°C	0.5	66	0.5	27	0.5	15	0.5	7	0.5	6	0.5	5	0.5	5	0.5	4	
t_{dis}	Disable time	DIR	A	–40°C to 85°C	0.5	10	0.5	10	0.5	10	0.5	10	0.5	10	0.5	10	0.5	10	0.5	10	ns
				–40°C to 125°C	0.5	13	0.5	13	0.5	13	0.5	13	0.5	13	0.5	13	0.5	13	0.5	13	
		DIR	B	–40°C to 85°C	0.5	136	0.5	95	0.5	71	0.5	21	0.5	14	0.5	13	0.5	10	0.5	10	
				–40°C to 125°C	0.5	136	0.5	95	0.5	75	0.5	27	0.5	20	0.5	17	0.5	13	0.5	12	
t_{en}	Enable time	DIR	A	–40°C to 85°C	0.5	254	0.5	176	0.5	147	0.5	33	0.5	25	0.5	24	0.5	19	0.5	22	ns
				–40°C to 125°C	0.5	278	0.5	185	0.5	153	0.5	39	0.5	31	0.5	29	0.5	23	0.5	25	
		DIR	B	–40°C to 85°C	0.5	99	0.5	55	0.5	41	0.5	22	0.5	24	0.5	20	0.5	23	0.5	19	
				–40°C to 125°C	0.5	98	0.5	58	0.5	40	0.5	26	0.5	24	0.5	23	0.5	23	0.5	22	

Table 5-8. Switching Characteristics, V_{CCA} = 3.3V

PARAMETER		FROM	TO	TEST CONDITIONS	B–PORT SUPPLY VOLTAGE (V_{CCB})																UNIT
					0.7 ± 0.05 V		0.8 ± 0.04 V		0.9 ± 0.045 V		1.2 ± 0.1V		1.5 ± 0.1V		1.8 ± 0.15 V		2.5 ± 0.2V		3.3 ± 0.3V		
					MIN	MAX	MIN	MAX	MIN	MAX	MIN	MAX	MIN	MAX	MIN	MAX	MIN	MAX	MIN	MAX	
t_{pd}	Propagation delay	A	B	–40°C to 85°C	0.5	79	0.5	39	0.5	22	0.5	7	0.5	4	0.5	4	0.5	3	0.5	3	ns
				–40°C to 125°C	0.5	79	0.5	39	0.5	22	0.5	7	0.5	5	0.5	4	0.5	4	0.5	4	
		B	A	–40°C to 85°C	0.5	144	0.5	36	0.5	18	0.5	7	0.5	5	0.5	4	0.5	4	0.5	3	
				–40°C to 125°C	0.5	144	0.5	36	0.5	18	0.5	8	0.5	6	0.5	5	0.5	4	0.5	4	
t_{dis}	Disable time	DIR	A	–40°C to 85°C	0.5	9	0.5	9	0.5	9	0.5	9	0.5	9	0.5	9	0.5	9	0.5	9	ns
				–40°C to 125°C	0.5	12	0.5	12	0.5	12	0.5	12	0.5	12	0.5	12	0.5	12	0.5	12	
		DIR	B	–40°C to 85°C	0.5	136	0.5	95	0.5	71	0.5	21	0.5	14	0.5	12	0.5	10	0.5	10	
				–40°C to 125°C	0.5	136	0.5	95	0.5	75	0.5	27	0.5	19	0.5	17	0.5	13	0.5	12	
t_{en}	Enable time	DIR	A	–40°C to 85°C	0.5	331	0.5	185	0.5	149	0.5	33	0.5	25	0.5	23	0.5	19	0.5	22	ns
				–40°C to 125°C	0.5	356	0.5	93	0.5	156	0.5	40	0.5	31	0.5	29	0.5	22	0.5	24	
		DIR	B	–40°C to 85°C	0.5	98	0.5	58	0.5	41	0.5	26	0.5	23	0.5	23	0.5	22	0.5	22	
				–40°C to 125°C	0.5	99	0.5	59	0.5	42	0.5	27	0.5	25	0.5	24	0.5	24	0.5	24	

Copyright © 2024 Texas Instruments Incorporated

5.7 Operating Characteristics: T_A = 25°C

PARAMETER		TEST CONDITIONS	V_{CCA}	V_{CCB}	MIN	TYP	MAX	UNIT
C_{pdA}	Power Dissipation Capacitance per transceiver (A to B)	C_L = 0, R_L = Open f = 1 MHz, t_r = t_f = 1 ns	0.7V	0.7V		1.3		pF
			0.8V	0.8V		1.3		
			0.9V	0.9V		1.3		
			1.2V	1.2V		1.3		
			1.5V	1.5V		1.3		
			1.8V	1.8V		1.4		
			2.5V	2.5V		1.7		
			3.3V	3.3V		2.1		
	Power Dissipation Capacitance per transceiver (B to A)	C_L = 0, R_L = Open f = 1 MHz, t_r = t_f = 1 ns	0.7V	0.7V		9.2		pF
			0.8V	0.8V		9.4		
			0.9V	0.9V		9.4		
			1.2V	1.2V		9.8		
			1.5V	1.5V		10.1		
			1.8V	1.8V		11.0		
			2.5V	2.5V		14.4		
			3.3V	3.3V		18.6		
C_{pdB}	Power Dissipation Capacitance per transceiver (A to B)	C_L = 0, R_L = Open f = 1 MHz, t_r = t_f = 1 ns	0.7V	0.7V		9.2		pF
			0.8V	0.8V		9.3		
			0.9V	0.9V		9.4		
			1.2V	1.2V		9.7		
			1.5V	1.5V		10.1		
			1.8V	1.8V		11.0		
			2.5V	2.5V		14.4		
			3.3V	3.3V		18.3		
	Power Dissipation Capacitance per transceiver (B to A)	C_L = 0, R_L = Open f = 1 MHz, t_r = t_f = 1 ns	0.7V	0.7V		1.3		pF
			0.8V	0.8V		1.3		
			0.9V	0.9V		1.3		
			1.2V	1.2V		1.3		
			1.5V	1.5V		1.3		
			1.8V	1.8V		1.4		
			2.5V	2.5V		1.7		
			3.3V	3.3V		2.1		

Copyright © 2024 Texas Instruments Incorporated

5.8 Typical Characteristics

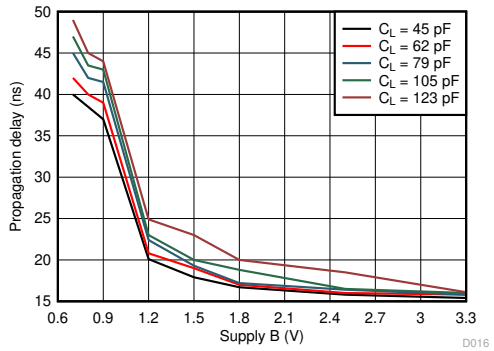

T_A = 25°C V_{CCA} = 0.7V

Figure 5-1. Typical Propagation Delay of Low-to-High (A to B) vs Load Capacitance

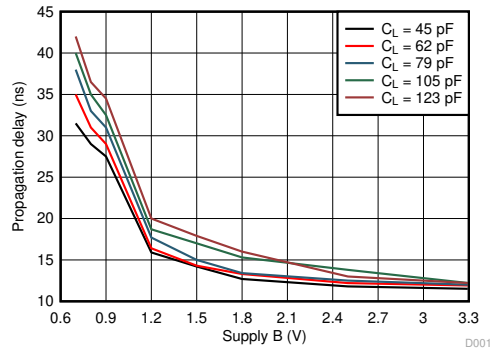

T_A = 25°C V_{CCA} = 0.8V

Figure 5-2. Typical Propagation Delay of Low-to-High (A to B) vs Load Capacitance

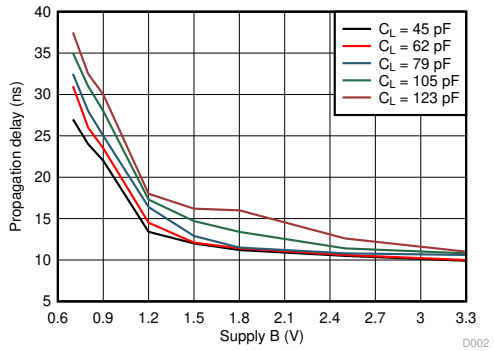

T_A = 25°C V_{CCA} = 0.9V

Figure 5-3. Typical Propagation Delay of Low-to-High (A to B) vs Load Capacitance

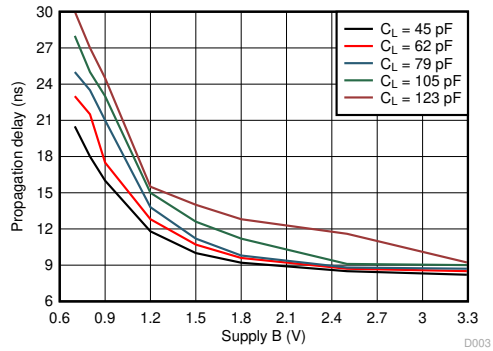

T_A = 25°C V_{CCA} = 1.2V

Figure 5-4. Typical Propagation Delay of Low-to-High (A to B) vs Load Capacitance

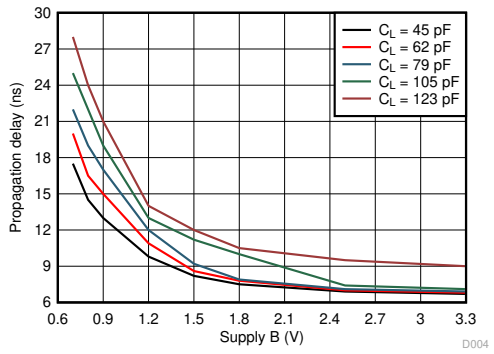

T_A = 25°C V_{CCA} = 1.5V

Figure 5-5. Typical Propagation Delay of Low-to-High (A to B) vs Load Capacitance

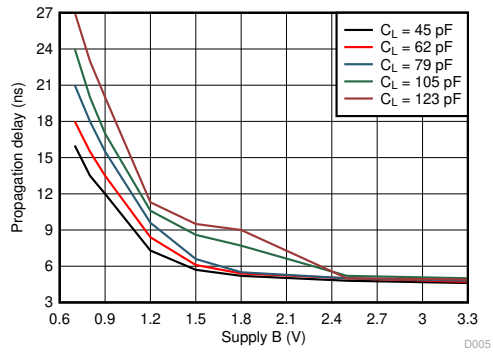

T_A = 25°C V_{CCA} = 1.8V

Figure 5-6. Typical Propagation Delay of Low-to-High (A to B) vs Load Capacitance

Copyright © 2024 Texas Instruments Incorporated

5.8 Typical Characteristics (continued)

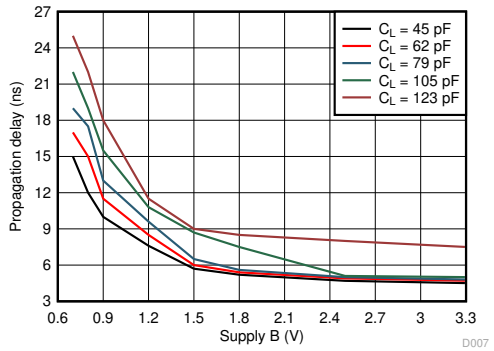

T_A = 25°C V_{CCA} = 3.3V

Figure 5-7. Typical Propagation Delay of Low-to-High (A to B) vs Load Capacitance

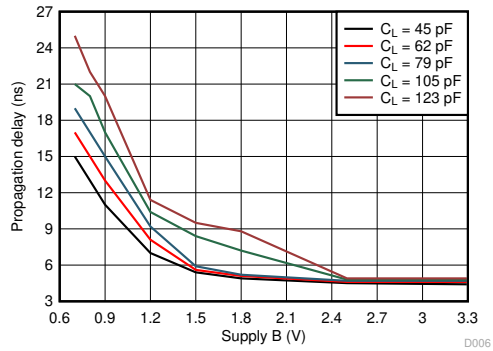

T_A = 25°C V_{CCA} = 2.5V

Figure 5-8. Typical Propagation Delay of Low-to-High (A to B) vs Load Capacitance

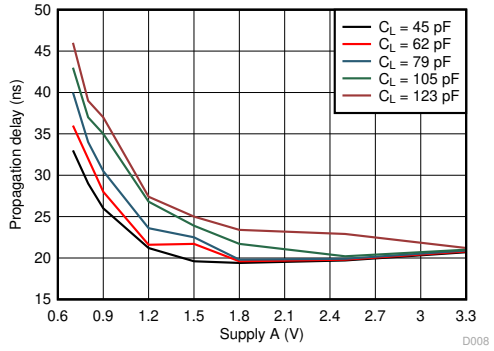

T_A = 25°C V_{CCA} = 0.7V

Figure 5-9. Typical Propagation Delay of Low-to-High (B to A) vs Load Capacitance

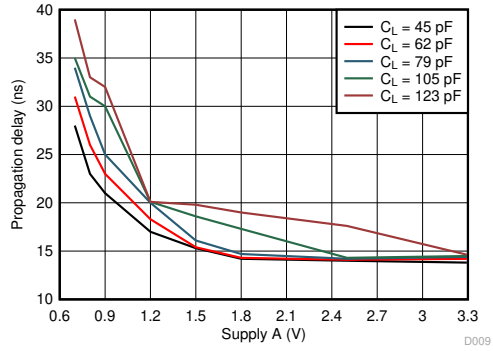

T_A = 25°C V_{CCA} = 0.8V

Figure 5-10. Typical Propagation Delay of Low-to-High (B to A) vs Load Capacitance

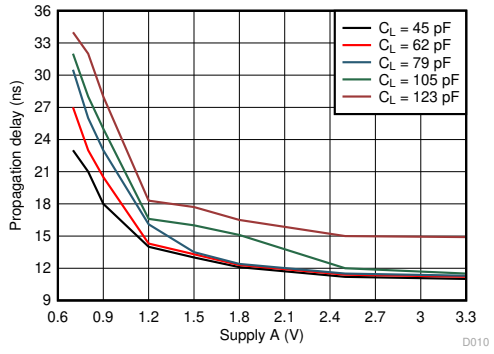

T_A = 25°C V_{CCA} = 0.9V

Figure 5-11. Typical Propagation Delay of Low-to-High (B to A) vs Load Capacitance

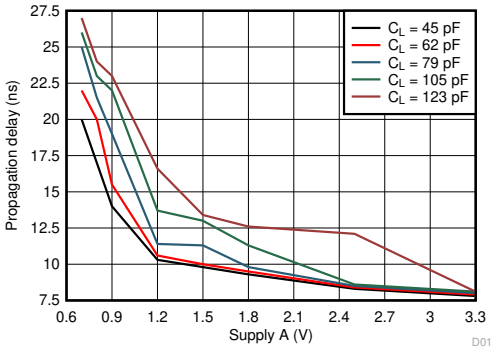

T_A = 25°C V_{CCA} = 1.2V

Figure 5-12. Typical Propagation Delay of Low-to-High (B to A) vs Load Capacitance

Copyright © 2024 Texas Instruments Incorporated

5.8 Typical Characteristics (continued)

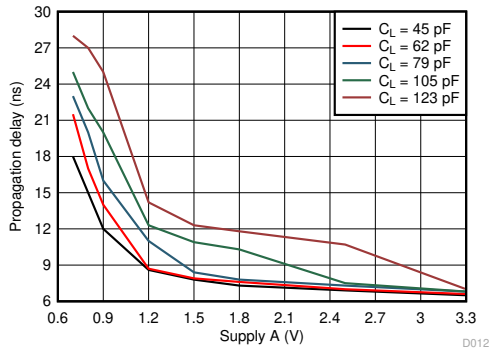

T_A = 25°C V_{CCA} = 1.5V

Figure 5-13. Typical Propagation Delay of Low-to-High (B to A) vs Load Capacitance

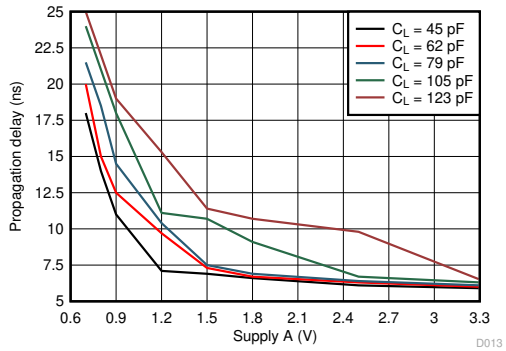

T_A = 25°C V_{CCA} = 1.8V

Figure 5-14. Typical Propagation Delay of Low-to-High (B to A) vs Load Capacitance

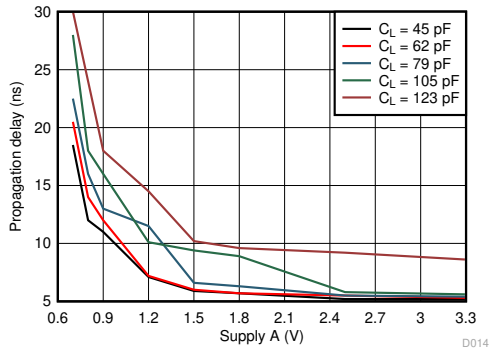

T_A = 25°C V_{CCA} = 2.5V

Figure 5-15. Typical Propagation Delay of Low-to-High (B to A) vs Load Capacitance

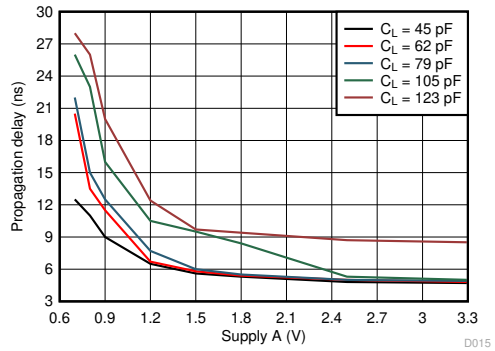

T_A = 25°C V_{CCA} = 3.3V

Figure 5-16. Typical Propagation Delay of Low-to-High (B to A) vs Load Capacitance

Copyright © 2024 Texas Instruments Incorporated

6 Parameter Measurement Information

6.1 Load Circuit and Voltage Waveforms

Unless otherwise noted, all input pulses are supplied by generators having the following characteristics:

- f = 1 MHz
- Z_O = 50 Ω
- dv/dt ≤ 1 ns/V

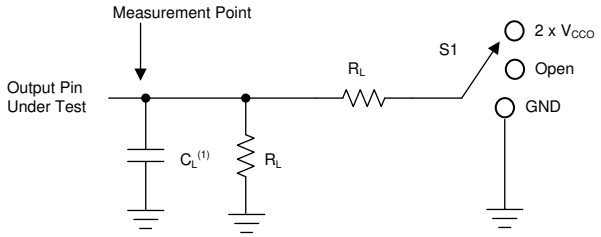

A. C_L includes probe and jig capacitance.

Figure 6-1. Load Circuit

Table 6-1. Load Circuit Conditions

Parameter		V_{CCO}	R_L	C_L	S_1	V_{TP}
Δt/Δv	Input transition rise or fall rate	0.65 V – 3.6V	1MΩ	15pF	Open	N/A
t_{pd}	Propagation (delay) time	1.1V – 3.6V	2kΩ	15pF	Open	N/A
		0.65 V – 0.95 V	20kΩ	15pF	Open	N/A
t_{en}, t_{dis}	Enable time, disable time	3V – 3.6V	2kΩ	15pF	2 × V_{CCO}	0.3V
		1.65 V – 2.7V	2kΩ	15pF	2 × V_{CCO}	0.15 V
		1.1V – 1.6V	2kΩ	15pF	2 × V_{CCO}	0.1V
		0.65 V – 0.95 V	20kΩ	15pF	2 × V_{CCO}	0.1V
t_{en}, t_{dis}	Enable time, disable time	3V – 3.6V	2kΩ	15pF	GND	0.3V
		1.65 V – 2.7V	2kΩ	15pF	GND	0.15 V
		1.1V – 1.6V	2kΩ	15pF	GND	0.1V
		0.65 V – 0.95 V	20kΩ	15pF	GND	0.1V

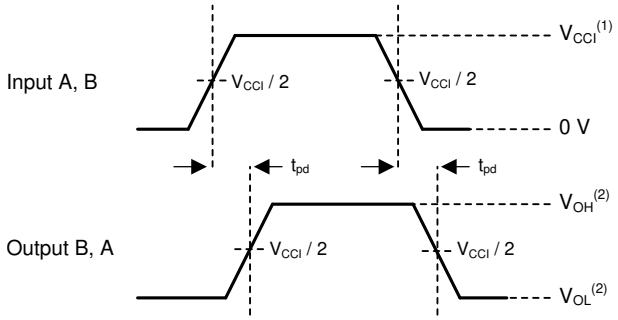

1. V_{CCI} is the supply pin associated with the input port.
2. V_{OH} and V_{OL} are typical output voltage levels that occur with specified R_L, C_L, and S_1

Figure 6-2. Propagation Delay

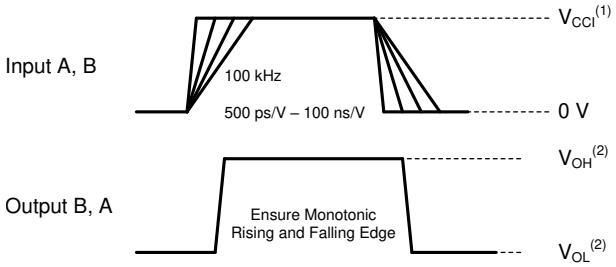

1. V_{CCI} is the supply pin associated with the input port.
2. V_{OH} and V_{OL} are typical output voltage levels that occur with specified R_L, C_L, and S_1

Figure 6-3. Input Transition Rise or Fall Rate

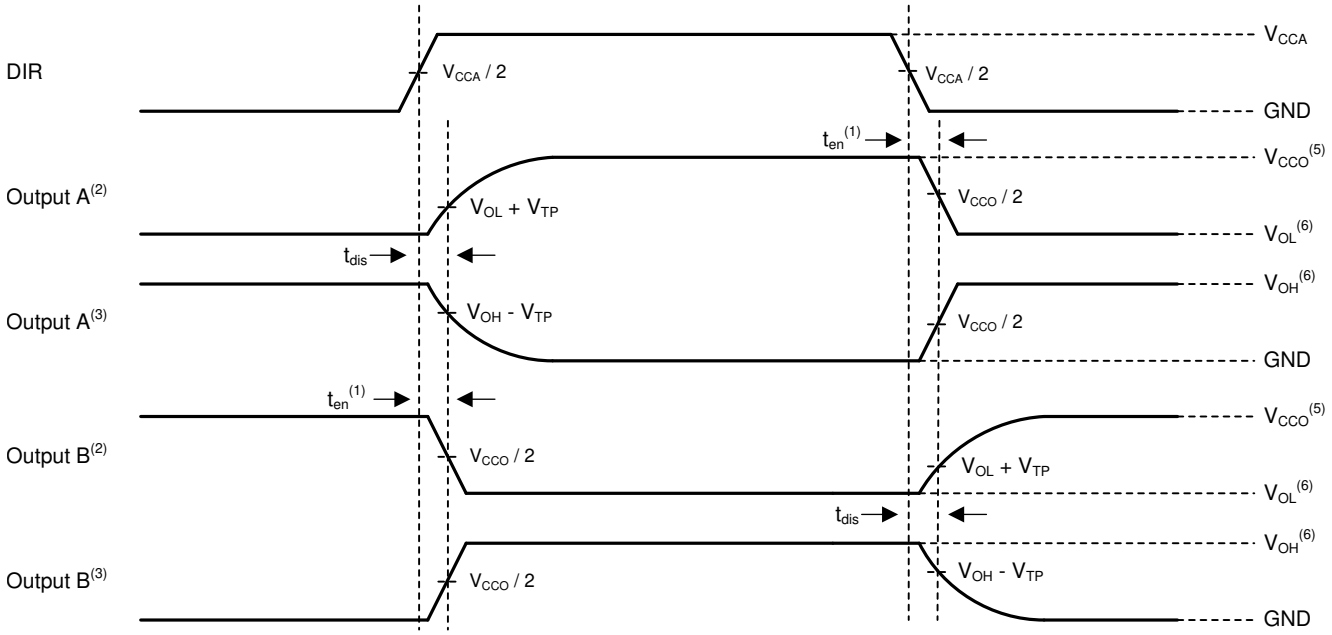

1. Illustrative purposes only. Enable Time is a calculation as described in the data sheet.
2. Output waveform on the condition that input is driven to a valid Logic Low.
3. Output waveform on the condition that input is driven to a valid Logic High.
4. V_{CCI} is the supply pin associated with the input port
5. V_{CCO} is the supply pin associated with the output port.
6. V_{OH} and V_{OL} are typical output voltage levels that occur with specified R_L, C_L, and S_1

Figure 6-4. Disable and Enable Time

Copyright © 2024 Texas Instruments Incorporated

7 Detailed Description

7.1 Overview

The SN74AXC1T45 is single-bit, dual-supply, noninverting voltage level translation. Pin A and the direction control pin are support by V_{CCA} and pin B is support by V_{CCB}. The A port can accept I/O voltages ranging from 0.65 V to 3.6V, and the B port can accept I/O voltages from 0.65 V to 3.6V. A high logic on the DIR pin allows data transmission from A to B and a logic low on the DIR pin allows data transmission from B to A.

7.2 Functional Block Diagram

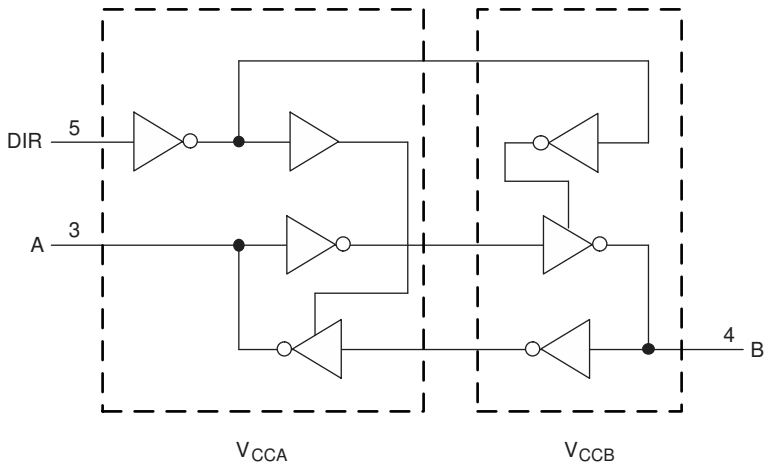

7.3 Feature Description

7.3.1 Fully Configurable Dual-Rail Design Allows Each Port to Operate Over the Full 0.65-V to 3.6-V Power-Supply Range

Both the V_{CCA} and V_{CCB} pins can be supplied at any voltage from 0.65 V to 3.6V, making the device suitable for translating between any of the voltage nodes (0.7V, 0.8V, 0.9V, 1.2V, 1.8V, 2.5V and 3.3V).

7.3.2 I/Os with Integrated Static Pull-Down Resistors

To help avoid floating inputs on the I/Os, this device has 288-kΩ typical integrated weak pull-downs on all data I/Os. This feature allows all inputs to be left floating without the concern for unstable outputs or increased current consumption. This also helps to reduce external component count for applications where not all channels are used or need to be fixed low. If an external pull-up is required, it should be no larger than 30-kΩ to avoid contention with the 288-kΩ internal pull-down.

7.3.3 Support High-Speed Translation

The SN74AXC1T45 device can support high data-rate applications. The translated signal data rate can be up to 500Mbps when signal is translated from 1.8V to 3.3V.

7.3.4 I_{off} Supports Partial-Power-Down Mode Operation

The I_{off} circuit prevents backflow current by disabling the I/O output circuits when the device is in partial-power-down mode.

7.4 Device Functional Modes

Table 7-1 lists the device functions for the DIR input.

Table 7-1. Function Table

INPUT[(1)] DIR	OPERATION
L	B data to A bus
H	A data to B bus

(1) Input circuits of the data I/Os always are active.

Copyright © 2024 Texas Instruments Incorporated

8 Application and Implementation

Note

Information in the following applications sections is not part of the TI component specification, and TI does not warrant its accuracy or completeness. TI's customers are responsible for determining suitability of components for their purposes. Customers should validate and test their design implementation to confirm system functionality.

8.1 Application Information

The SN74AXC1T45 device can be used in level-translation applications for interfacing devices or systems with one another when they are operating at different interface voltages. The maximum data rate can be up to 500Mbps when the device translate signal is from 1.8V to 3.3V.

8.1.1 Enable Times

Calculate the enable times for the SN74AXC1T45 using the following formulas:

$$t_{A_en}\ (\text{DIR to A}) = t_{dis}\ (\text{DIR to B}) + t_{pd}\ (\text{B to A}) \quad (1)$$

$$t_{B_en}\ (\text{DIR to B}) = t_{dis}\ (\text{DIR to A}) + t_{pd}\ (\text{A to B}) \quad (2)$$

In a bidirectional application, these enable times provide the maximum delay time from the time the DIR bit is switched until an output is expected. For example, if the SN74AXC1T45 initially is transmitting from A to B, then the DIR bit is switched; the B port of the device must be disabled ($t_{dis)}$ before presenting it with an input. After the B port has been disabled, an input signal applied to it appears on the corresponding A port after the specified propagation delay (t_{pd}). To avoid bus contention care should be taken to not apply an input signal prior to the output port being disabled (t_{dis} max).

8.2 Typical Applications

8.2.1 Unidirectional Logic Level-Shifting Application

Figure 8-1 shows an example of the SN74AXC1T45 being used in a unidirectional logic level-shifting application.

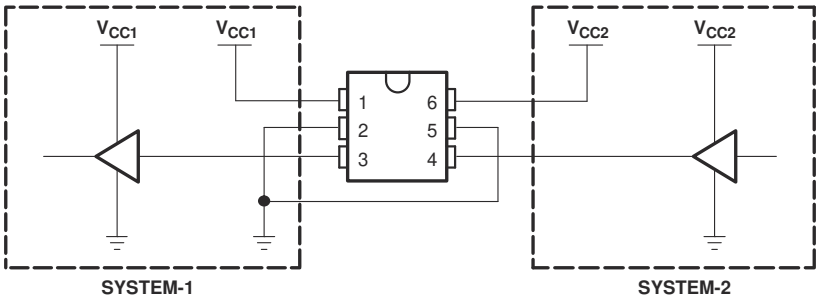

Figure 8-1. Unidirectional Logic Level-Shifting Application

Table 8-1. Unidirectional Level Shifting Function

PIN	NAME	FUNCTION	DESCRIPTION
1	V_{CCA}	V_{CC1}	SYSTEM-1 supply voltage (0.65 V to 3.6V)
2	GND	GND	Device GND
3	A	OUT	Output level depends on V_{CC1} voltage.
4	B	IN	Input threshold value depends on V_{CC2} voltage.
5	DIR	DIR	GND (low level) determines B-port to A-port direction.
6	V_{CCB}	V_{CC2}	SYSTEM-2 supply voltage (0.65 V to 3.6V)

Copyright © 2024 Texas Instruments Incorporated

8.2.1.1 Design Requirements

For this design example, use the parameters listed in Table 8-2.

Table 8-2. Design Parameters

DESIGN PARAMETERS	EXAMPLE VALUES
Input voltage range	0.65 V to 3.6V
Output voltage range	0.65 V to 3.6V

8.2.1.2 Detailed Design Procedure

To begin the design process, determine the following:

- Input voltage range
  - Use the supply voltage of the device that is driving the SN74AXC1T45 device to determine the input voltage range. For a valid logic-high, the value must exceed the high-level input voltage (V_{IH}) of the input port. For a valid logic low the value must be less than the low-level input voltage (V_{IL}) of the input port.
- Output voltage range
  - Use the supply voltage of the device that the SN74AXC1T45 device is driving to determine the output voltage range.

8.2.1.3 Application Curve

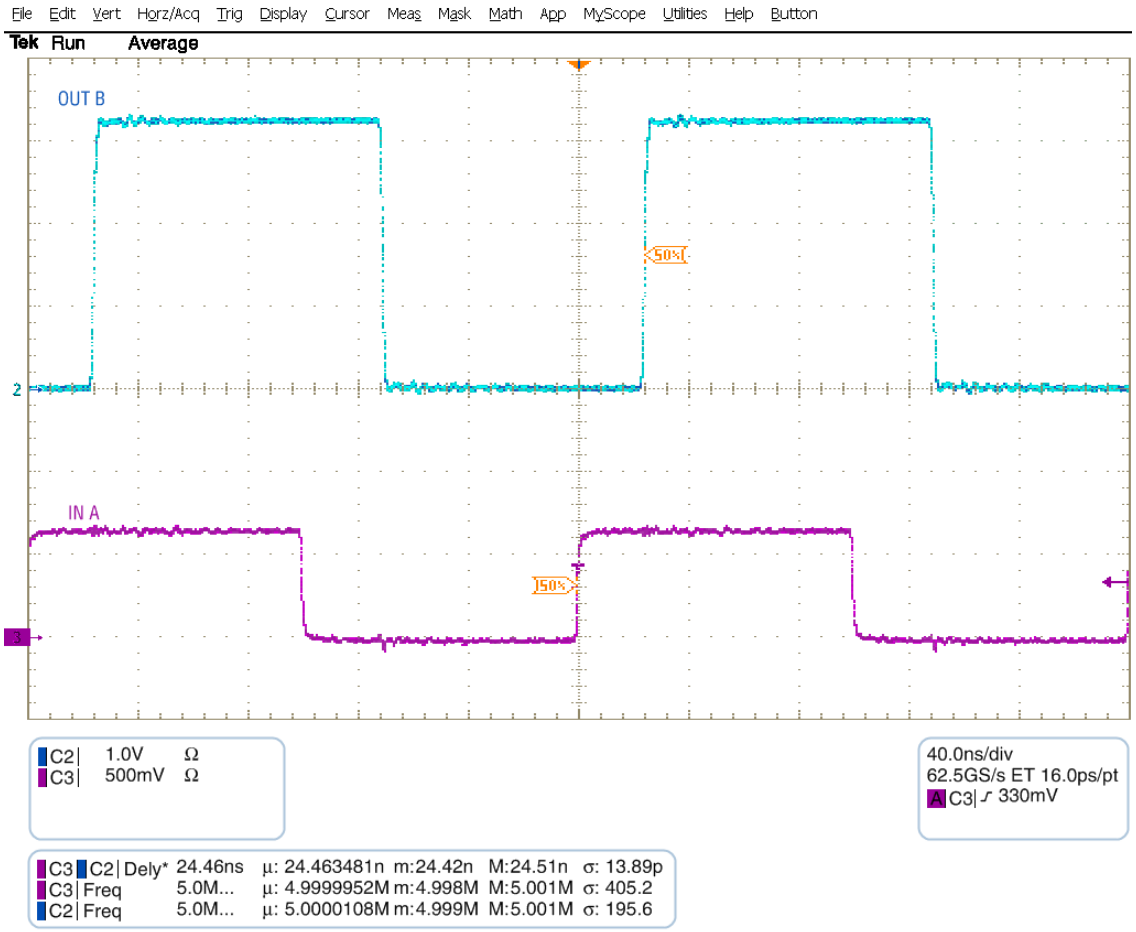

Figure 8-2. Up Translation at 2.5 MHz (0.7V to 3.3V)

Copyright © 2024 Texas Instruments Incorporated

8.2.2 Bidirectional Logic Level-Shifting Application

Figure 8-3 shows the SN74AXC1T45 being used in a bidirectional logic level-shifting application. Because the SN74AXC1T45 does not have an output-enable (OE) pin, the system designer should take precautions to avoid bus contention between SYSTEM-1 and SYSTEM-2 when changing directions.

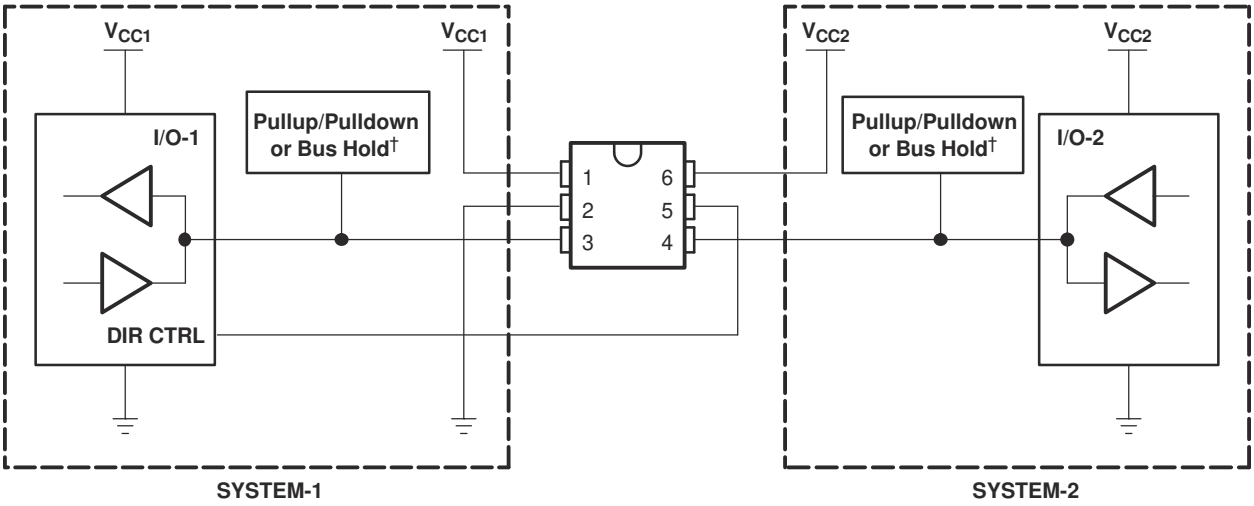

Figure 8-3. Bidirectional Logic Level-Shifting Application

Table 8-3 lists the data transmission from SYSTEM-1 to SYSTEM-2 and then from SYSTEM-2 to SYSTEM-1.

Table 8-3. Data Transmission: SYSTEM-1 and SYSTEM-2

STATE	DIR CTRL	I/O-1	I/O-2	DESCRIPTION
1	H	Out	In	SYSTEM-1 data to SYSTEM-2.
2	H	Hi-Z	Hi-Z	SYSTEM-2 is getting ready to send data to SYSTEM-1. I/O-1 and I/O-2 are disabled. The bus-line state depends on pullup or pulldown resistors.(1)
3	L	Hi-Z	Hi-Z	DIR bit is flipped. I/O-1 and I/O-2 still are disabled. The bus-line state depends on pullup or pulldown resistors.(1)
4	L	In	Out	SYSTEM-2 data to SYSTEM-1.

(1) SYSTEM-1 and SYSTEM-2 must use the same conditions, essentially, both pullup or both pulldown.

8.2.2.1 Design Requirements

Refer to *Design Requirements*.

8.2.2.2 Detailed Design Procedure

Refer to *Detailed Design Procedure*.

8.2.2.3 Application Curve

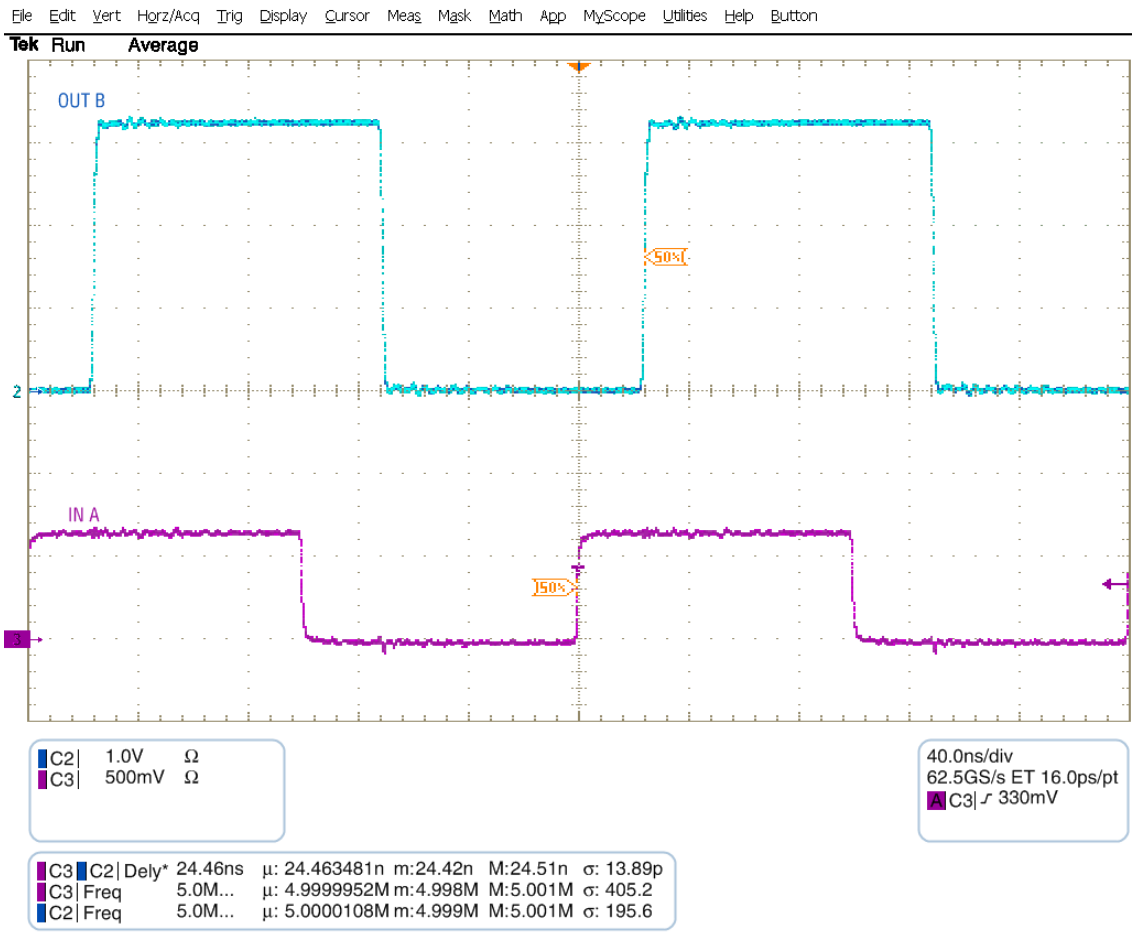

Figure 8-4. Up Translation at 2.5 MHz (0.7V to 3.3V)

8.3 Power Supply Recommendations

The SN74AXC1T45 device uses two separate configurable power-supply rails, V_{CCA} and V_{CCB}. The V_{CCA} power-supply rail accepts any supply voltage from 0.65 V to 3.6 V and the V_{CCB} power-supply rail accepts any supply voltage from 0.65 V to 3.6 V. The A port and B port are designed to track the V_{CCA} and V_{CCB} supplies respectively allowing for low-voltage, bidirectional translation between any of the 0.7V, 0.8V, 0.9V, 1.2V, 1.5V, 1.8V, 2.5V, and 3.3V voltage nodes.

8.3.1 Power-Up Considerations

A proper power-up sequence must be followed to avoid excessive supply current, bus contention, oscillations, or other anomalies. To guard against such power-up problems, take the following precautions:

1. Connect the ground before any supply voltage is applied.
2. Power up the V_{CCA} and V_{CCB} supplies. The V_{CCA} and V_{CCB} supplies can be ramped in any order.

8.4 Layout

8.4.1 Layout Guidelines

To ensure reliability of the device, following common printed-circuit board layout guidelines is recommended:

- Bypass capacitors should be used on power supplies.
- Short trace lengths should be used to avoid excessive loading.

Copyright © 2024 Texas Instruments Incorporated

- Placing pads on the signal paths for loading capacitors or pullup resistors to help adjust rise and fall times of signals depending on the system requirements.

8.4.2 Layout Example

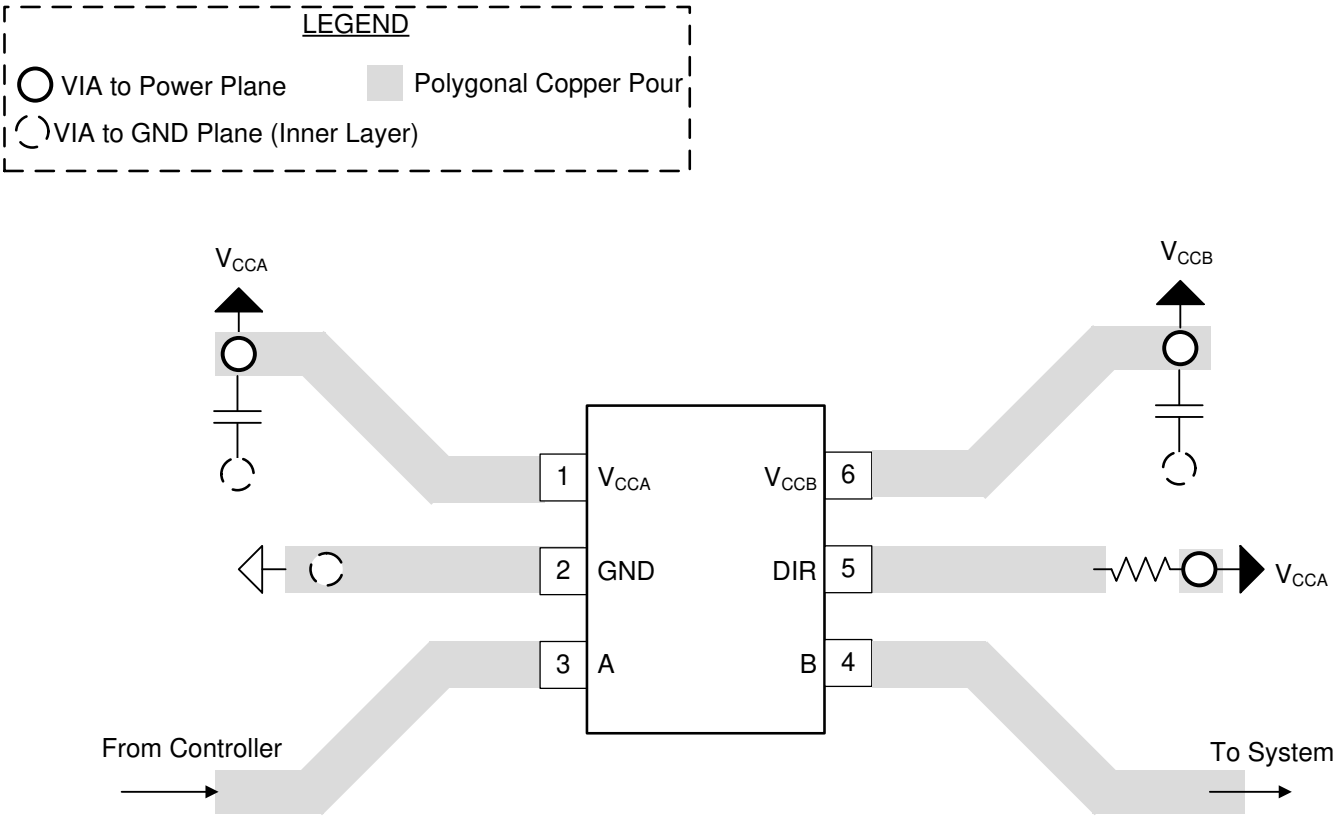

Figure 8-5. PCB Layout Example

9 Device and Documentation Support

9.1 Documentation Support

9.1.1 Related Documentation

For related documentation see the following:

- Texas Instruments, *Evaluate SN74AXC1T45DRL Using a Generic EVM* application report
- Texas Instruments, *Implications of Slow or Floating CMOS Inputs* application report
- Texas Instruments, *Power Sequencing for the AXC Family of Devices* application report

9.2 Receiving Notification of Documentation Updates

To receive notification of documentation updates, navigate to the device product folder on ti.com. Click on *Notifications* to register and receive a weekly digest of any product information that has changed. For change details, review the revision history included in any revised document.

9.3 Support Resources

TI E2E™ support forums are an engineer's go-to source for fast, verified answers and design help — straight from the experts. Search existing answers or ask your own question to get the quick design help you need.

Linked content is provided "AS IS" by the respective contributors. They do not constitute TI specifications and do not necessarily reflect TI's views; see TI's Terms of Use.

9.4 Trademarks

TI E2E™ is a trademark of Texas Instruments.
All trademarks are the property of their respective owners.

9.5 Electrostatic Discharge Caution

This integrated circuit can be damaged by ESD. Texas Instruments recommends that all integrated circuits be handled with appropriate precautions. Failure to observe proper handling and installation procedures can cause damage.

ESD damage can range from subtle performance degradation to complete device failure. Precision integrated circuits may be more susceptible to damage because very small parametric changes could cause the device not to meet its published specifications.

9.6 Glossary

TI Glossary	This glossary lists and explains terms, acronyms, and definitions.

10 Revision History

NOTE: Page numbers for previous revisions may differ from page numbers in the current version.

Changes from Revision D (October 2021) to Revision E (December 2023)	Page
• Added the *I/Os with Integrated Static Pull-Down Resistors* section	17

Changes from Revision C (September 2020) to Revision D (October 2021)	Page
• Updated the *Pin Configuration and Functions* section to include *DRL* and *DEA* packages	3

Changes from Revision B (June 2018) to Revision C (September 2020)	Page
• Updated the numbering format for tables, figures and cross-references throughout the document	1
• Updated all the tables to newest 3d table format	1
• Updated I_{CCA}, I_{CCB}, and I_{CCA} + I_{CCB} to reflect updated performance of device	6

Changes from Revision A (April 2018) to Revision B (June 2018)	Page
• Added DEA and DTQ as active package options	1

Copyright © 2024 Texas Instruments Incorporated

- Changed product status from Production Mix to Production Data.....1

Changes from Revision * (December 2017) to Revision A (April 2018)	Page
• Added pinout drawing for DEA package	3
• Added pinout drawing for DTQ package	3

11 Mechanical, Packaging, and Orderable Information

The following pages include mechanical, packaging, and orderable information. This information is the most current data available for the designated devices. This data is subject to change without notice and revision of this document. For browser-based versions of this data sheet, refer to the left-hand navigation.

PACKAGING INFORMATION

Orderable part number	Status (1)	Material type (2)	Package | Pins	Package qty | Carrier	RoHS (3)	Lead finish/ Ball material (4)	MSL rating/ Peak reflow (5)	Op temp (°C)	Part marking (6)
SN74AXC1T45DBVR	Active	Production	SOT-23 (DBV) | 6	3000 | LARGE T&R	Yes	NIPDAU | SN	Level-1-260C-UNLIM	-40 to 125	1GRL
SN74AXC1T45DBVR.B	Active	Production	SOT-23 (DBV) | 6	3000 | LARGE T&R	Yes	NIPDAU	Level-1-260C-UNLIM	-40 to 125	1GRL
SN74AXC1T45DBVRG4	Active	Production	SOT-23 (DBV) | 6	3000 | LARGE T&R	Yes	NIPDAU	Level-1-260C-UNLIM	-40 to 125	1GRL
SN74AXC1T45DBVRG4.B	Active	Production	SOT-23 (DBV) | 6	3000 | LARGE T&R	Yes	NIPDAU	Level-1-260C-UNLIM	-40 to 125	1GRL
SN74AXC1T45DCKR	Active	Production	SC70 (DCK) | 6	3000 | LARGE T&R	Yes	SN	Level-1-260C-UNLIM	-40 to 125	1A3
SN74AXC1T45DCKR.B	Active	Production	SC70 (DCK) | 6	3000 | LARGE T&R	Yes	SN	Level-1-260C-UNLIM	-40 to 125	1A3
SN74AXC1T45DEAR	Active	Production	X2SON (DEA) | 6	5000 | LARGE T&R	Yes	NIPDAU	Level-1-260C-UNLIM	-40 to 125	CR
SN74AXC1T45DEAR.A	Active	Production	X2SON (DEA) | 6	5000 | LARGE T&R	Yes	NIPDAU	Level-1-260C-UNLIM	-40 to 125	CR
SN74AXC1T45DEAR.B	Active	Production	X2SON (DEA) | 6	5000 | LARGE T&R	Yes	NIPDAU	Level-1-260C-UNLIM	-40 to 125	CR
SN74AXC1T45DEARG4.A	Active	Production	X2SON (DEA) | 6	5000 | LARGE T&R	Yes	NIPDAU	Level-1-260C-UNLIM	-40 to 125	CR
SN74AXC1T45DEARG4.B	Active	Production	X2SON (DEA) | 6	5000 | LARGE T&R	Yes	NIPDAU	Level-1-260C-UNLIM	-40 to 125	CR
SN74AXC1T45DRLR	Active	Production	SOT-5X3 (DRL) | 6	4000 | LARGE T&R	Yes	NIPDAU | NIPDAUAG	Level-1-260C-UNLIM	-40 to 125	1A1
SN74AXC1T45DRLR.B	Active	Production	SOT-5X3 (DRL) | 6	4000 | LARGE T&R	Yes	NIPDAU	Level-1-260C-UNLIM	-40 to 125	1A1
SN74AXC1T45DRLRG4	Active	Production	SOT-5X3 (DRL) | 6	4000 | LARGE T&R	Yes	NIPDAU	Level-1-260C-UNLIM	-40 to 125	1A1
SN74AXC1T45DRLRG4.B	Active	Production	SOT-5X3 (DRL) | 6	4000 | LARGE T&R	Yes	NIPDAU	Level-1-260C-UNLIM	-40 to 125	1A1
SN74AXC1T45DTQR	Active	Production	X2SON (DTQ) | 6	3000 | LARGE T&R	Yes	NIPDAU	Level-1-260C-UNLIM	-40 to 125	CW
SN74AXC1T45DTQR.A	Active	Production	X2SON (DTQ) | 6	3000 | LARGE T&R	Yes	NIPDAU	Level-1-260C-UNLIM	-40 to 125	CW
SN74AXC1T45DTQR.B	Active	Production	X2SON (DTQ) | 6	3000 | LARGE T&R	Yes	NIPDAU	Level-1-260C-UNLIM	-40 to 125	CW

(1) **Status:** For more details on status, see our product life cycle.

(2) **Material type:** When designated, preproduction parts are prototypes/experimental devices, and are not yet approved or released for full production. Testing and final process, including without limitation quality assurance, reliability performance testing, and/or process qualification, may not yet be complete, and this item is subject to further changes or possible discontinuation. If available for ordering, purchases will be subject to an additional waiver at checkout, and are intended for early internal evaluation purposes only. These items are sold without warranties of any kind.

(3) **RoHS values:** Yes, No, RoHS Exempt. See the TI RoHS Statement for additional information and value definition.

(4) **Lead finish/Ball material:** Parts may have multiple material finish options. Finish options are separated by a vertical ruled line. Lead finish/Ball material values may wrap to two lines if the finish value exceeds the maximum column width.

(5) **MSL rating/Peak reflow:** The moisture sensitivity level ratings and peak solder (reflow) temperatures. In the event that a part has multiple moisture sensitivity ratings, only the lowest level per JEDEC standards is shown. Refer to the shipping label for the actual reflow temperature that will be used to mount the part to the printed circuit board.

(6) **Part marking:** There may be an additional marking, which relates to the logo, the lot trace code information, or the environmental category of the part.

Multiple part markings will be inside parentheses. Only one part marking contained in parentheses and separated by a "~" will appear on a part. If a line is indented then it is a continuation of the previous line and the two combined represent the entire part marking for that device.

Important Information and Disclaimer: The information provided on this page represents TI's knowledge and belief as of the date that it is provided. TI bases its knowledge and belief on information provided by third parties, and makes no representation or warranty as to the accuracy of such information. Efforts are underway to better integrate information from third parties. TI has taken and continues to take reasonable steps to provide representative and accurate information but may not have conducted destructive testing or chemical analysis on incoming materials and chemicals. TI and TI suppliers consider certain information to be proprietary, and thus CAS numbers and other limited information may not be available for release.

In no event shall TI's liability arising out of such information exceed the total purchase price of the TI part(s) at issue in this document sold by TI to Customer on an annual basis.

OTHER QUALIFIED VERSIONS OF SN74AXC1T45 :

- Automotive : SN74AXC1T45-Q1

NOTE: Qualified Version Definitions:

- Automotive - Q100 devices qualified for high-reliability automotive applications targeting zero defects

TAPE AND REEL INFORMATION

REEL DIMENSIONS

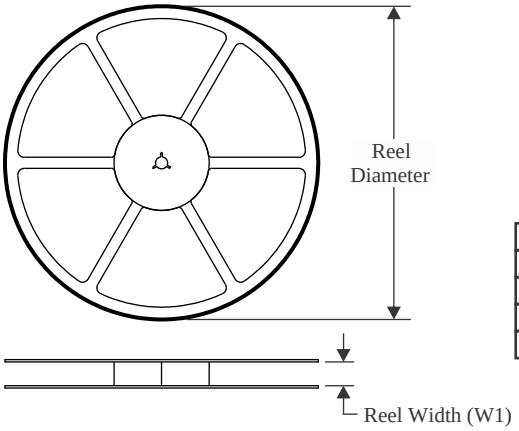

TAPE DIMENSIONS

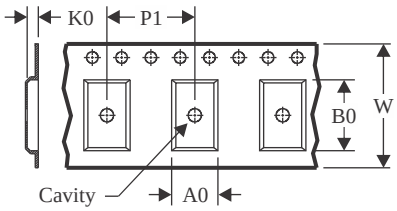

A0	Dimension designed to accommodate the component width
B0	Dimension designed to accommodate the component length
K0	Dimension designed to accommodate the component thickness
W	Overall width of the carrier tape
P1	Pitch between successive cavity centers

QUADRANT ASSIGNMENTS FOR PIN 1 ORIENTATION IN TAPE

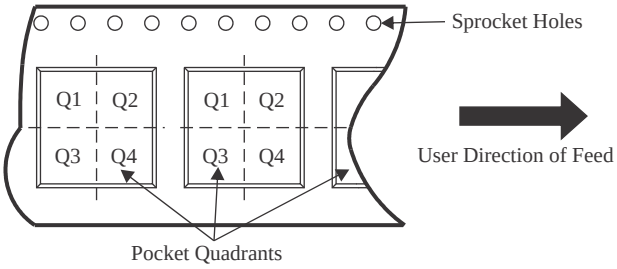

*All dimensions are nominal

Device	Package Type	Package Drawing	Pins	SPQ	Reel Diameter (mm)	Reel Width W1 (mm)	A0 (mm)	B0 (mm)	K0 (mm)	P1 (mm)	W (mm)	Pin1 Quadrant
SN74AXC1T45DBVR	SOT-23	DBV	6	3000	180.0	8.4	3.2	3.2	1.4	4.0	8.0	Q3
SN74AXC1T45DBVRG4	SOT-23	DBV	6	3000	180.0	8.4	3.2	3.2	1.4	4.0	8.0	Q3
SN74AXC1T45DCKR	SC70	DCK	6	3000	180.0	8.4	2.3	2.5	1.2	4.0	8.0	Q3
SN74AXC1T45DCKR	SC70	DCK	6	3000	178.0	9.0	2.4	2.5	1.2	4.0	8.0	Q3
SN74AXC1T45DEAR	X2SON	DEA	6	5000	180.0	9.5	1.13	1.13	0.5	4.0	8.0	Q3
SN74AXC1T45DRLR	SOT-5X3	DRL	6	4000	180.0	8.4	2.0	1.8	0.75	4.0	8.0	Q3
SN74AXC1T45DRLR	SOT-5X3	DRL	6	4000	180.0	8.4	1.98	1.78	0.69	4.0	8.0	Q3
SN74AXC1T45DRLRG4	SOT-5X3	DRL	6	4000	180.0	8.4	2.0	1.8	0.75	4.0	8.0	Q3
SN74AXC1T45DTQR	X2SON	DTQ	6	3000	180.0	9.5	0.94	1.13	0.5	2.0	8.0	Q2

TAPE AND REEL BOX DIMENSIONS

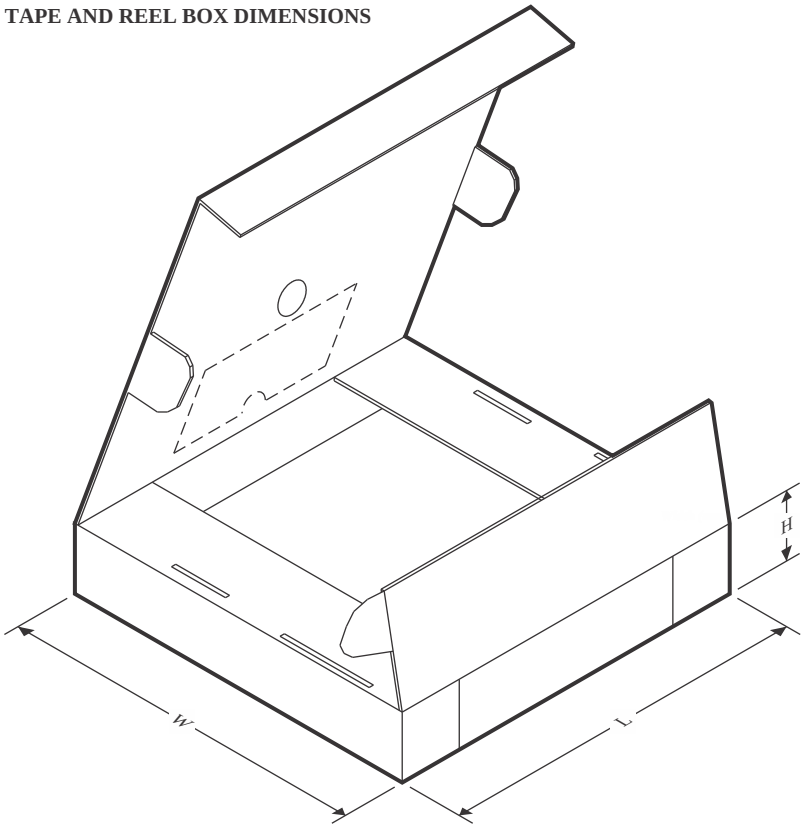

*All dimensions are nominal

Device	Package Type	Package Drawing	Pins	SPQ	Length (mm)	Width (mm)	Height (mm)
SN74AXC1T45DBVR	SOT-23	DBV	6	3000	210.0	185.0	35.0
SN74AXC1T45DBVRG4	SOT-23	DBV	6	3000	210.0	185.0	35.0
SN74AXC1T45DCKR	SC70	DCK	6	3000	210.0	185.0	35.0
SN74AXC1T45DCKR	SC70	DCK	6	3000	180.0	180.0	18.0
SN74AXC1T45DEAR	X2SON	DEA	6	5000	189.0	185.0	36.0
SN74AXC1T45DRLR	SOT-5X3	DRL	6	4000	210.0	185.0	35.0
SN74AXC1T45DRLR	SOT-5X3	DRL	6	4000	183.0	183.0	20.0
SN74AXC1T45DRLRG4	SOT-5X3	DRL	6	4000	210.0	185.0	35.0
SN74AXC1T45DTQR	X2SON	DTQ	6	3000	189.0	185.0	36.0

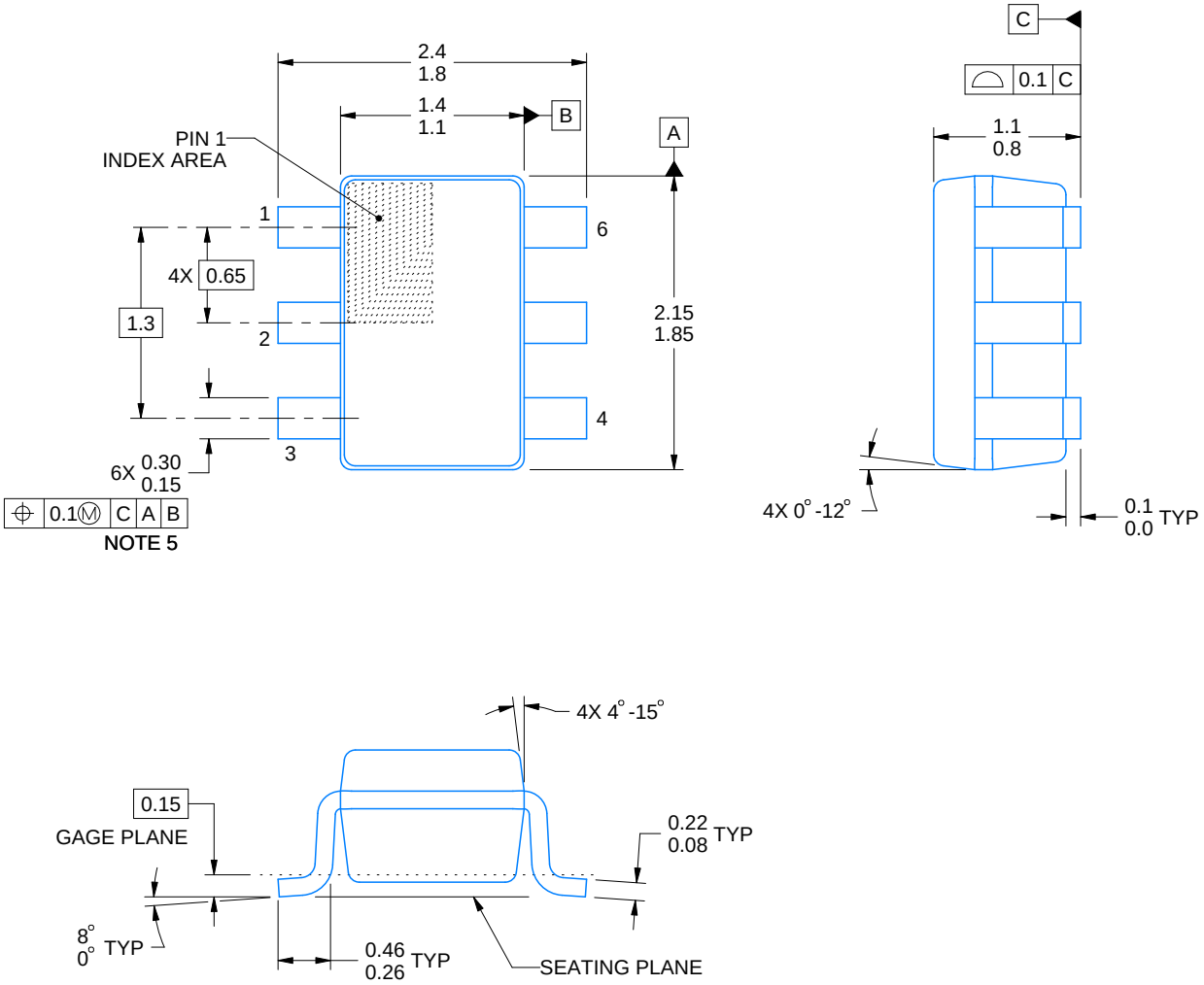

4214835/D 11/2024

NOTES:

1. All linear dimensions are in millimeters. Any dimensions in parenthesis are for reference only. Dimensioning and tolerancing per ASME Y14.5M.
2. This drawing is subject to change without notice.
3. Body dimensions do not include mold flash or protrusion. Mold flash and protrusion shall not exceed 0.15 per side.
4. Falls within JEDEC MO-203 variation AB.

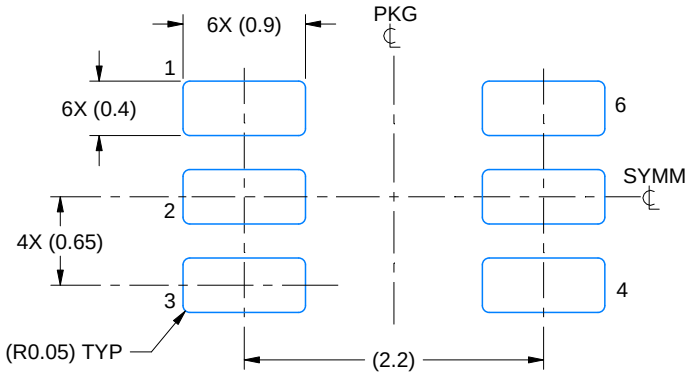

LAND PATTERN EXAMPLE
EXPOSED METAL SHOWN
SCALE:18X

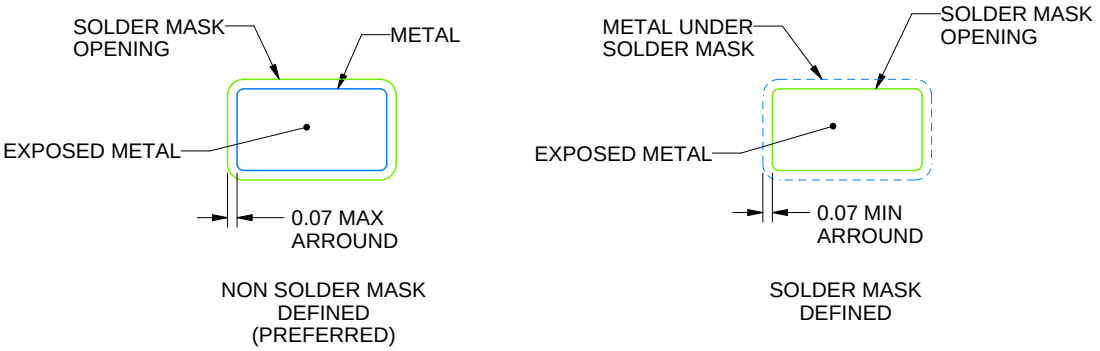

SOLDER MASK DETAILS

4214835/D 11/2024

NOTES: (continued)

5. Publication IPC-7351 may have alternate designs.
6. Solder mask tolerances between and around signal pads can vary based on board fabrication site.

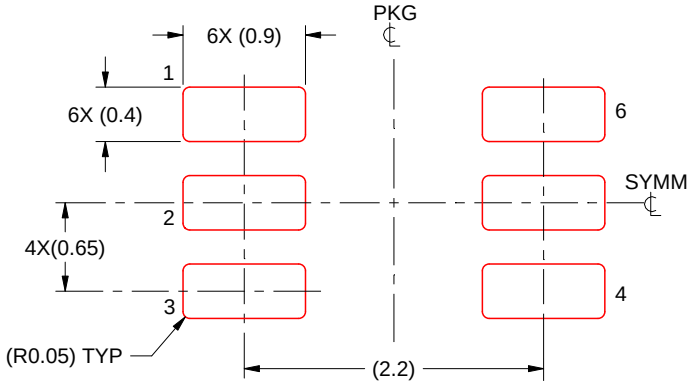

SOLDER PASTE EXAMPLE
BASED ON 0.125 THICK STENCIL
SCALE:18X

4214835/D 11/2024

NOTES: (continued)

7. Laser cutting apertures with trapezoidal walls and rounded corners may offer better paste release. IPC-7525 may have alternate design recommendations.
8. Board assembly site may have different recommendations for stencil design.

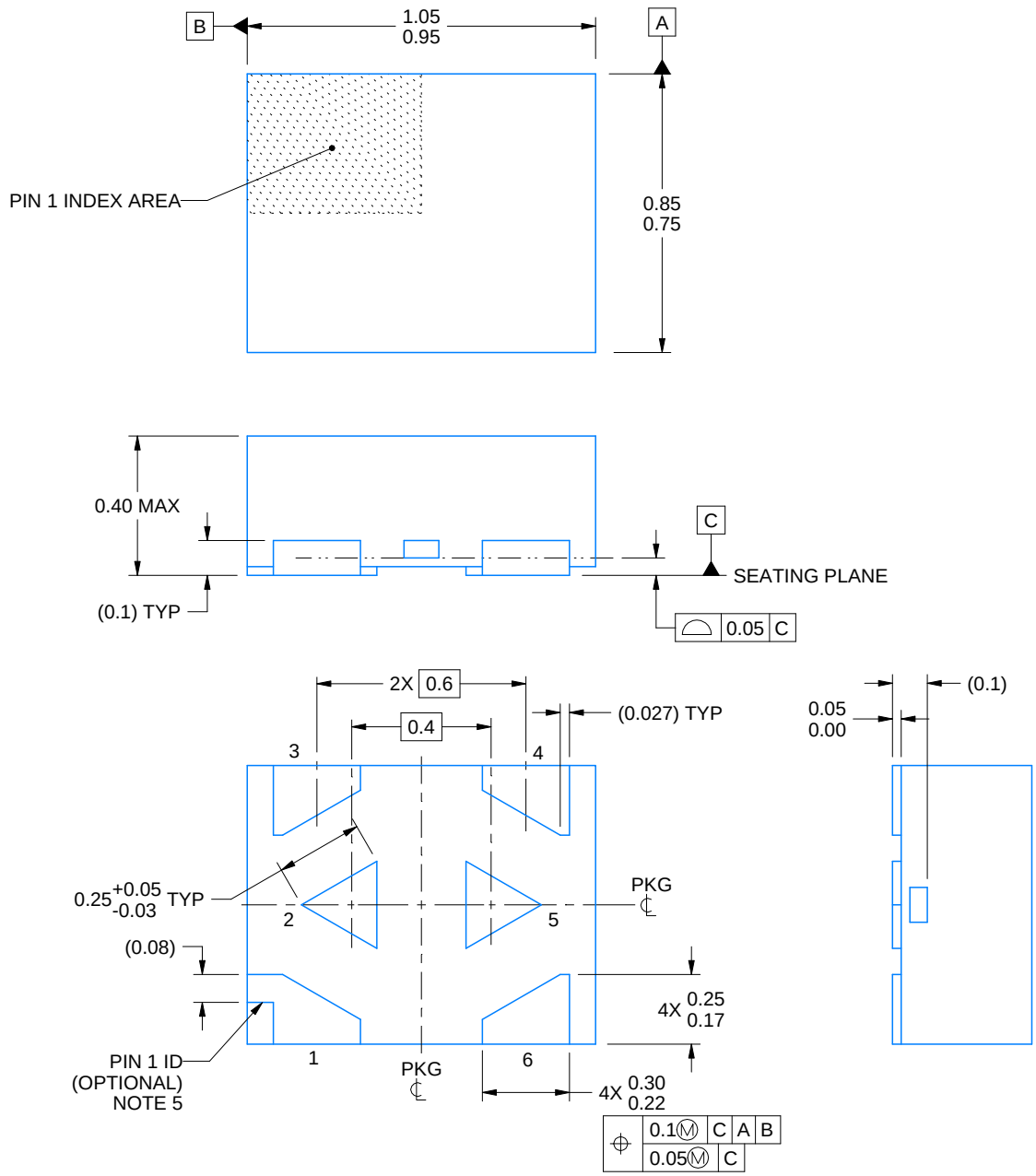

4224056/B 07/2024

NOTES:

1. All linear dimensions are in millimeters. Any dimensions in parenthesis are for reference only. Dimensioning and tolerancing per ASME Y14.5M.
2. This drawing is subject to change without notice.
3. The package thermal pads must be soldered to the printed circuit board for optimal thermal and mechanical performance.
4. The size and shape of this feature may vary.
5. Features may not exist. Recommend use of pin 1 marking on top of package for orientation purposes.

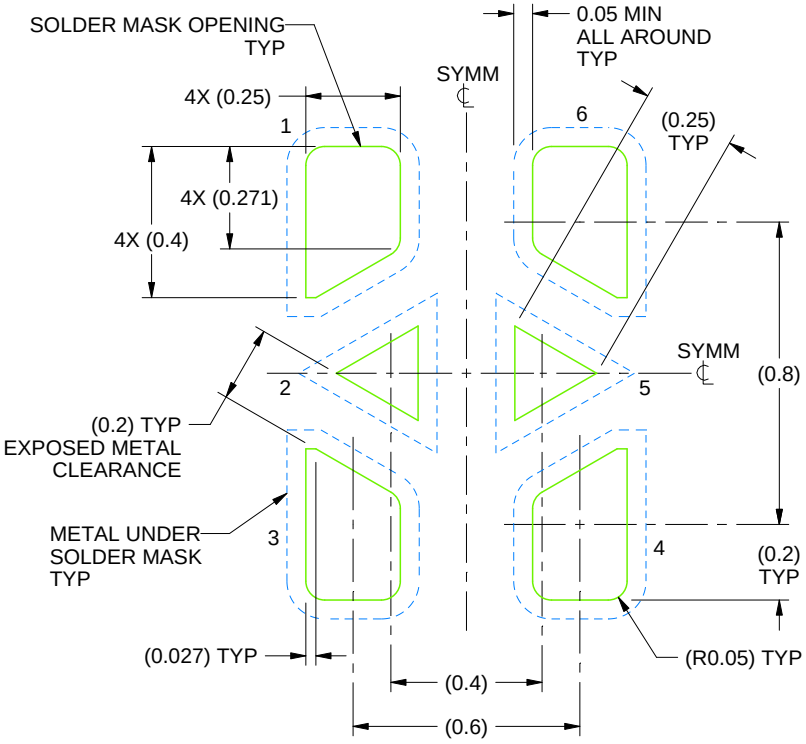

LAND PATTERN EXAMPLE
SOLDER MASK DEFINED
SCALE:50X

4224056/B 07/2024

NOTES: (continued)

6. This package is designed to be soldered to a thermal pads on the board. For more information, see Texas Instruments literature number SLUA271 (www.ti.com/lit/slua271).
7. Vias are optional depending on application, refer to device data sheet. If some or all are implemented, recommended via locations are shown.

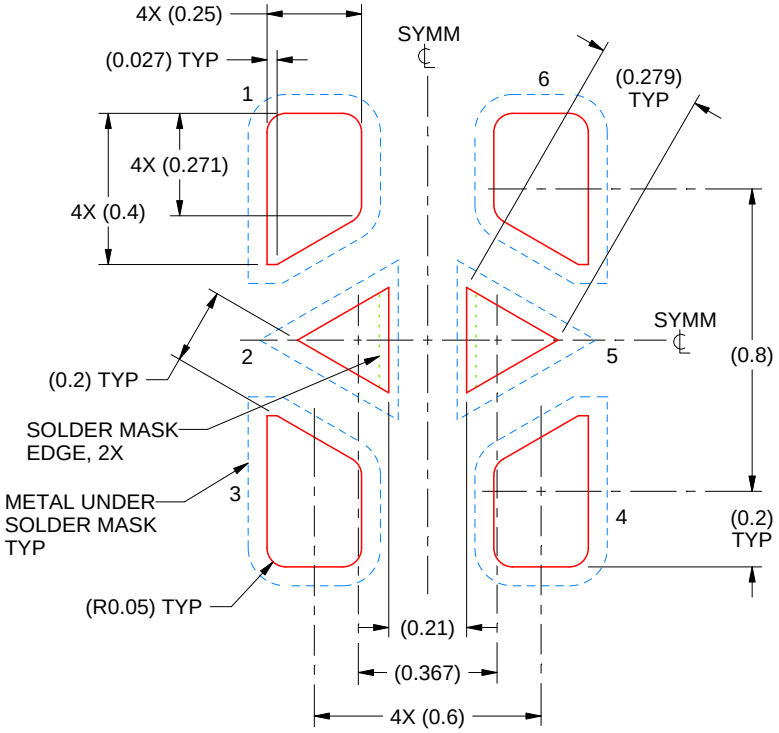

SOLDER PASTE EXAMPLE
BASED ON 0.07 mm THICK STENCIL

PRINTED SOLDER COVERAGE BY AREA UNDER PACKAGE
SCALE:50X

4224056/B 07/2024

NOTES: (continued)

8. Laser cutting apertures with trapezoidal walls and rounded corners may offer better paste release. IPC-7525 may have alternate design recommendations.

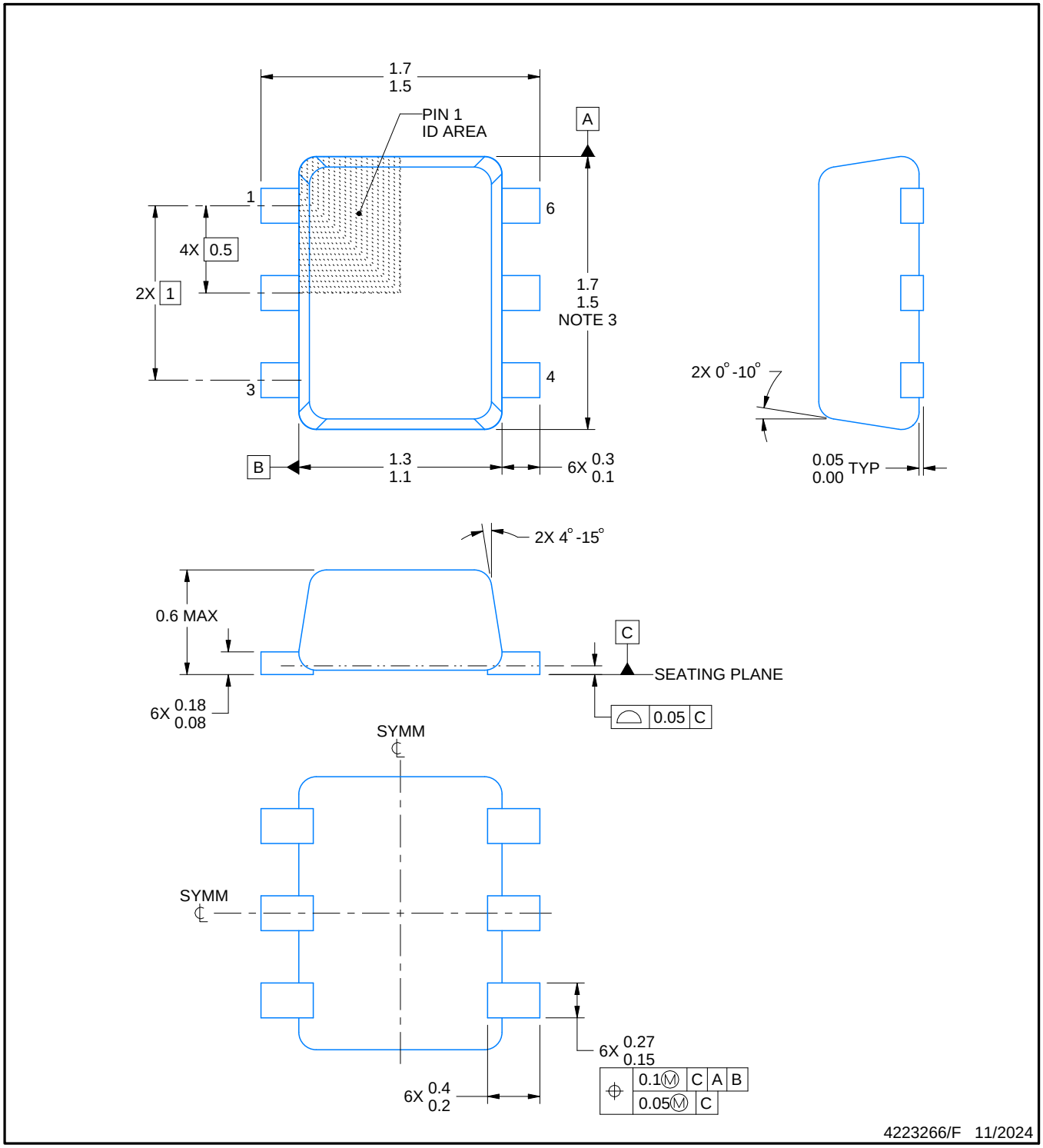

NOTES:

1. All linear dimensions are in millimeters. Any dimensions in parenthesis are for reference only. Dimensioning and tolerancing per ASME Y14.5M.
2. This drawing is subject to change without notice.
3. This dimension does not include mold flash, protrusions, or gate burrs. Mold flash, protrusions, or gate burrs shall not exceed 0.15 mm per side.
4. Reference JEDEC registration MO-293 Variation UAAD

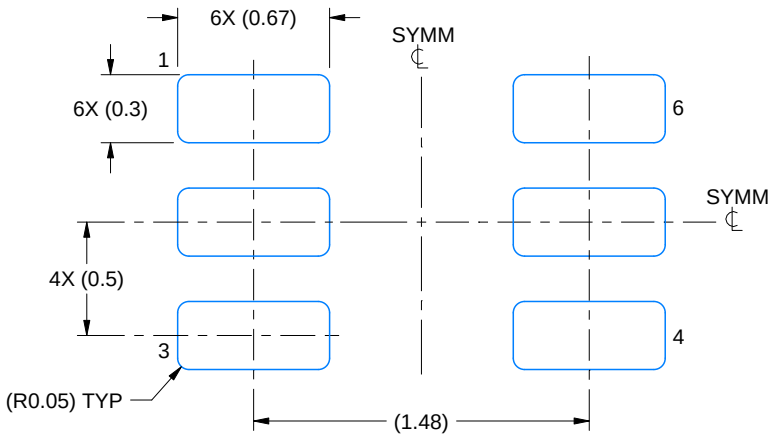

LAND PATTERN EXAMPLE
SCALE:30X

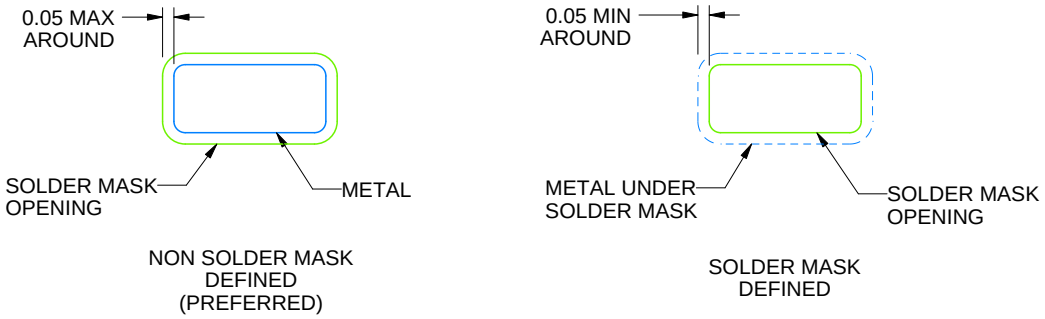

SOLDERMASK DETAILS

4223266/F 11/2024

NOTES: (continued)

5. Publication IPC-7351 may have alternate designs.
6. Solder mask tolerances between and around signal pads can vary based on board fabrication site.
7. Land pattern design aligns to IPC-610, Bottom Termination Component (BTC) solder joint inspection criteria.

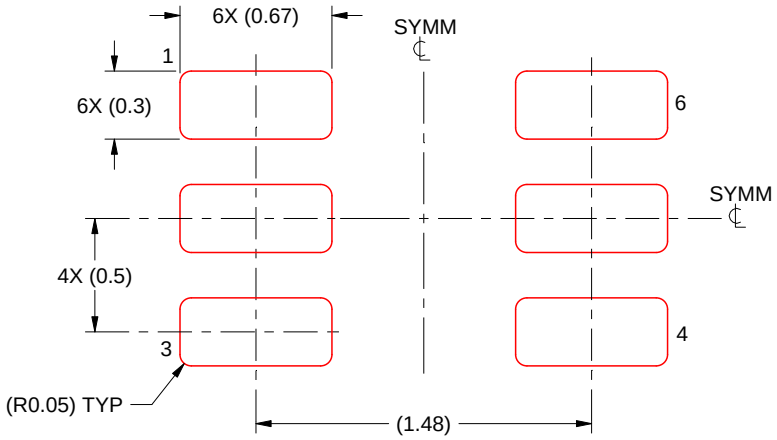

SOLDER PASTE EXAMPLE
BASED ON 0.1 mm THICK STENCIL
SCALE:30X

4223266/F 11/2024

NOTES: (continued)

8. Laser cutting apertures with trapezoidal walls and rounded corners may offer better paste release. IPC-7525 may have alternate design recommendations.
9. Board assembly site may have different recommendations for stencil design.

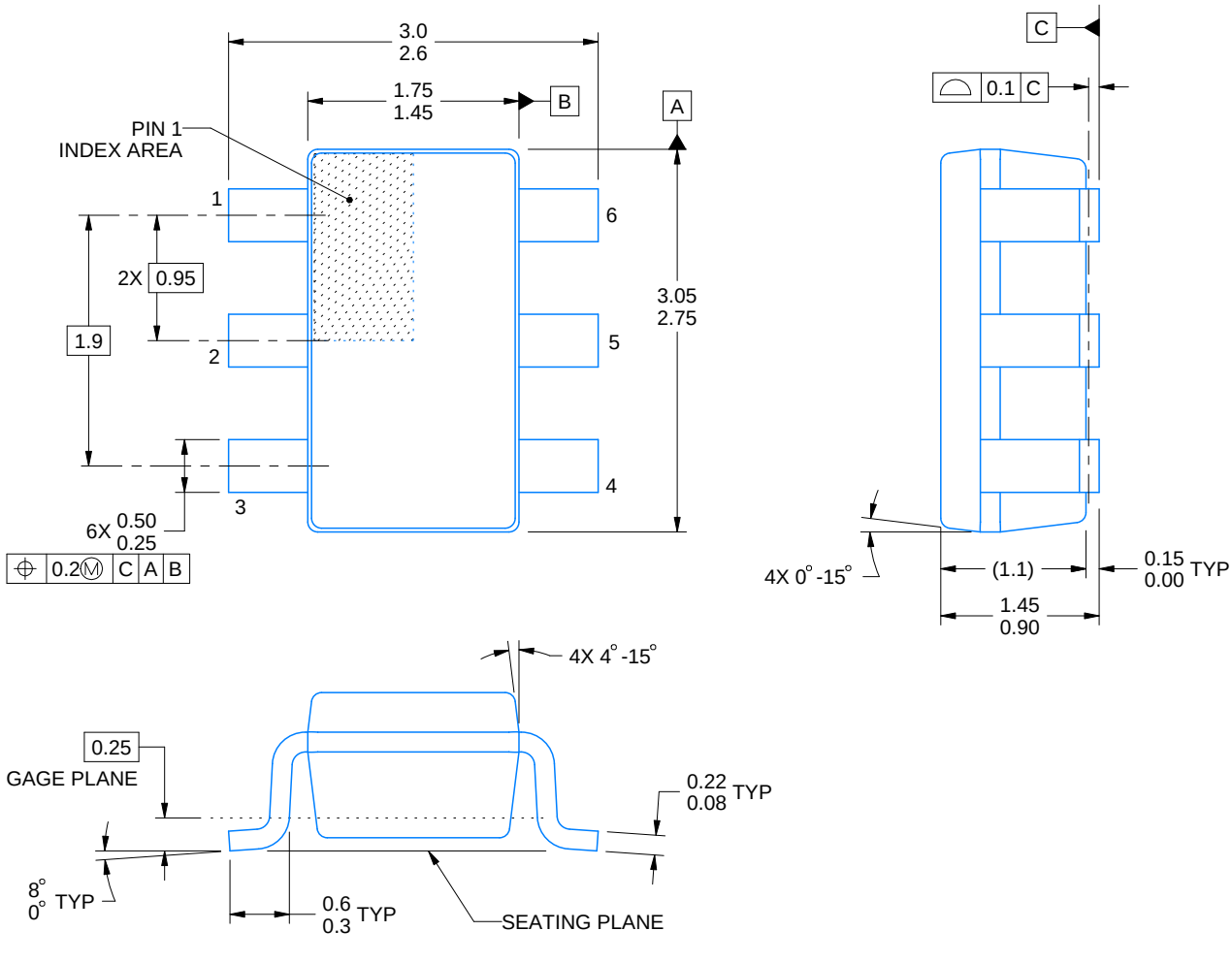

4214840/G 08/2024

NOTES:

1. All linear dimensions are in millimeters. Any dimensions in parenthesis are for reference only. Dimensioning and tolerancing per ASME Y14.5M.
2. This drawing is subject to change without notice.
3. Body dimensions do not include mold flash or protrusion. Mold flash and protrusion shall not exceed 0.25 per side.
4. Leads 1,2,3 may be wider than leads 4,5,6 for package orientation.
5. Refernce JEDEC MO-178.

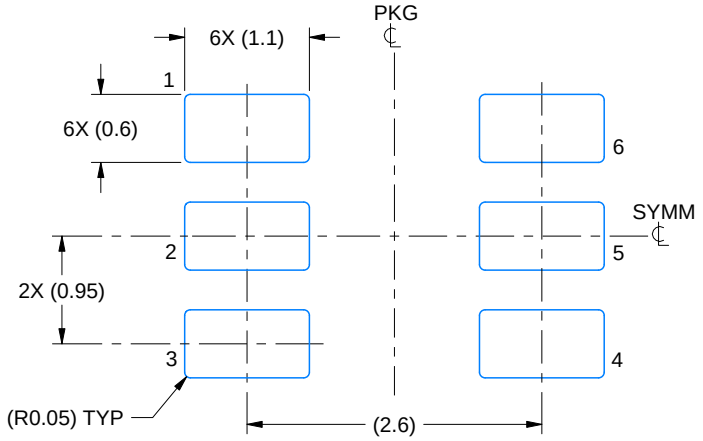

LAND PATTERN EXAMPLE
EXPOSED METAL SHOWN
SCALE:15X

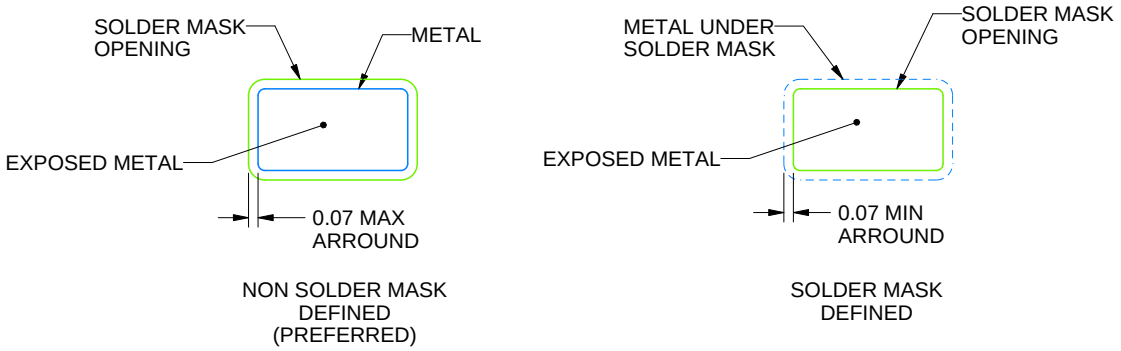

SOLDER MASK DETAILS

4214840/G 08/2024

NOTES: (continued)

6. Publication IPC-7351 may have alternate designs.
7. Solder mask tolerances between and around signal pads can vary based on board fabrication site.

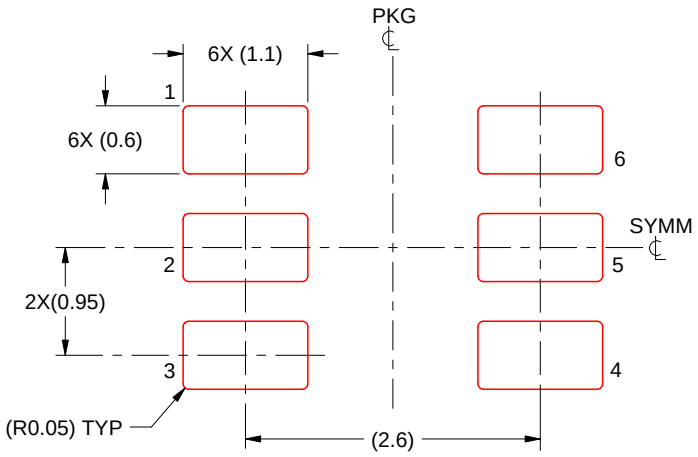

SOLDER PASTE EXAMPLE
BASED ON 0.125 mm THICK STENCIL
SCALE:15X

4214840/G 08/2024

NOTES: (continued)

8. Laser cutting apertures with trapezoidal walls and rounded corners may offer better paste release. IPC-7525 may have alternate design recommendations.
9. Board assembly site may have different recommendations for stencil design.

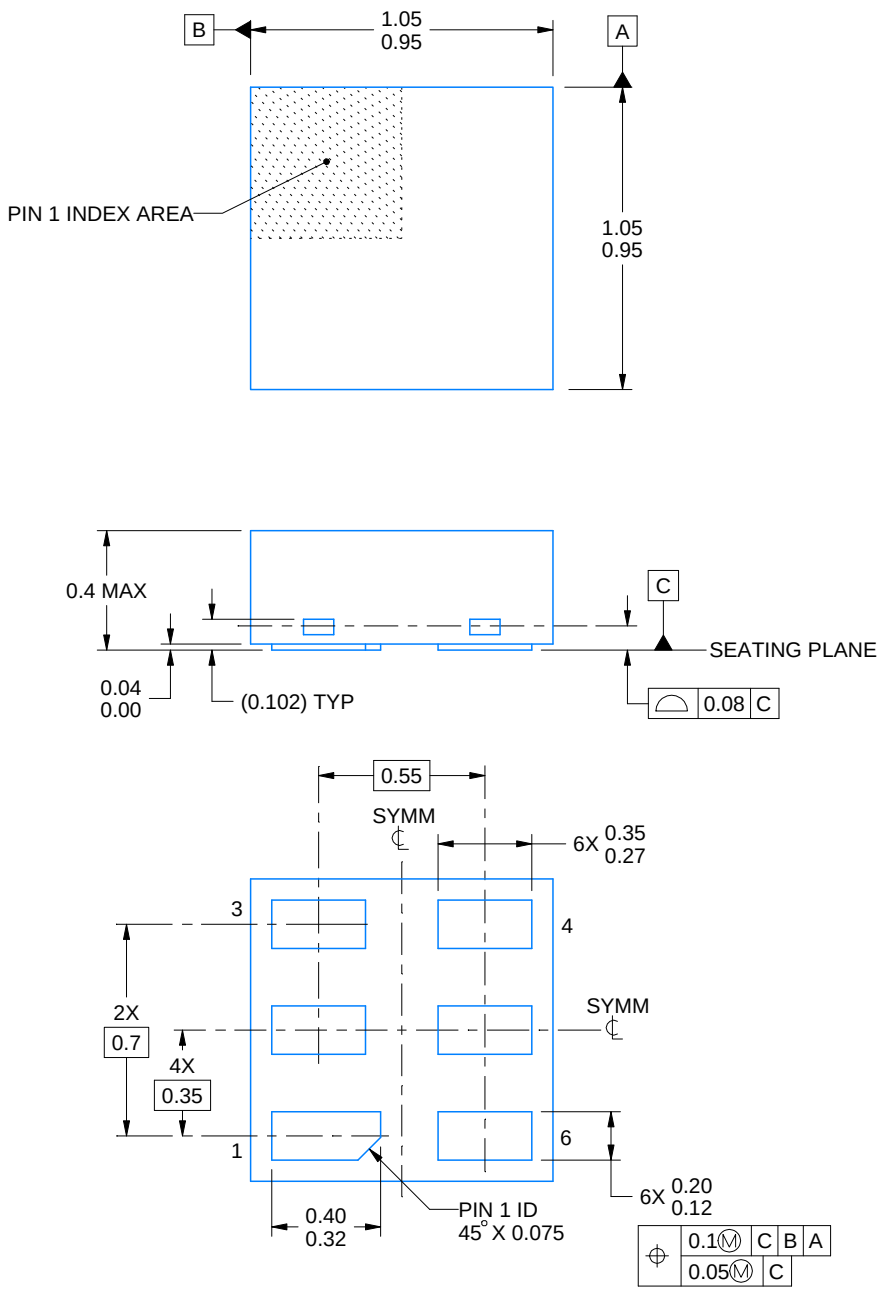

4223910/C 12/2017

NOTES:

1. All linear dimensions are in millimeters. Any dimensions in parenthesis are for reference only. Dimensioning and tolerancing per ASME Y14.5M.
2. This drawing is subject to change without notice.

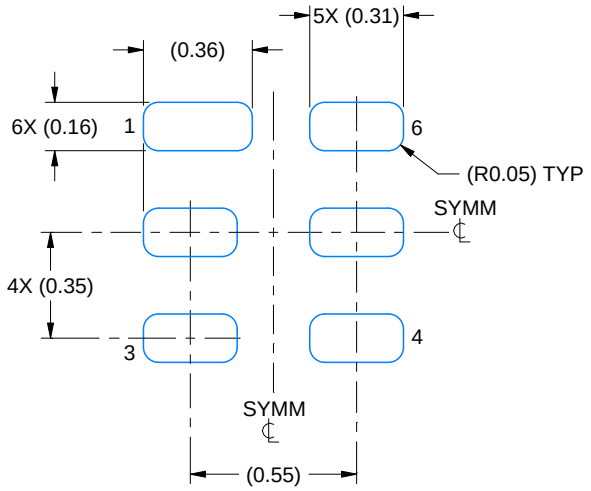

LAND PATTERN EXAMPLE
EXPOSED METAL SHOWN
SCALE:40X

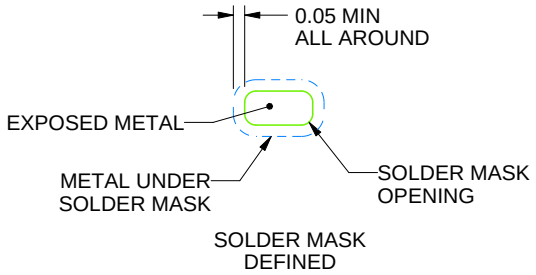

SOLDER MASK DETAILS

4223910/C 12/2017

NOTES: (continued)

3. For more information, see Texas Instruments literature number SLUA271 (www.ti.com/lit/slua271).

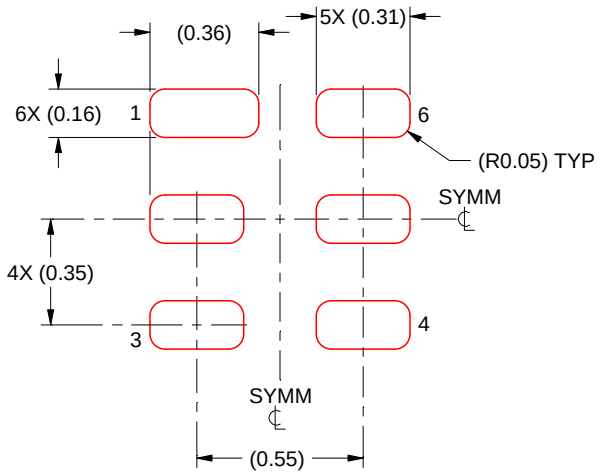

SOLDER PASTE EXAMPLE
BASED ON 0.075 mm THICK STENCIL
SCALE:40X

4223910/C 12/2017

4. Laser cutting apertures with trapezoidal walls and rounded corners may offer better paste release. IPC-7525 may have alternate design recommendations.

IMPORTANT NOTICE AND DISCLAIMER

TI PROVIDES TECHNICAL AND RELIABILITY DATA (INCLUDING DATA SHEETS), DESIGN RESOURCES (INCLUDING REFERENCE DESIGNS), APPLICATION OR OTHER DESIGN ADVICE, WEB TOOLS, SAFETY INFORMATION, AND OTHER RESOURCES “AS IS” AND WITH ALL FAULTS, AND DISCLAIMS ALL WARRANTIES, EXPRESS AND IMPLIED, INCLUDING WITHOUT LIMITATION ANY IMPLIED WARRANTIES OF MERCHANTABILITY, FITNESS FOR A PARTICULAR PURPOSE OR NON-INFRINGEMENT OF THIRD PARTY INTELLECTUAL PROPERTY RIGHTS.

These resources are intended for skilled developers designing with TI products. You are solely responsible for (1) selecting the appropriate TI products for your application, (2) designing, validating and testing your application, and (3) ensuring your application meets applicable standards, and any other safety, security, regulatory or other requirements.

These resources are subject to change without notice. TI grants you permission to use these resources only for development of an application that uses the TI products described in the resource. Other reproduction and display of these resources is prohibited. No license is granted to any other TI intellectual property right or to any third party intellectual property right. TI disclaims responsibility for, and you will fully indemnify TI and its representatives against, any claims, damages, costs, losses, and liabilities arising out of your use of these resources.

TI’s products are provided subject to TI’s Terms of Sale or other applicable terms available either on ti.com or provided in conjunction with such TI products. TI’s provision of these resources does not expand or otherwise alter TI’s applicable warranties or warranty disclaimers for TI products.

TI objects to and rejects any additional or different terms you may have proposed.

Mailing Address: Texas Instruments, Post Office Box 655303, Dallas, Texas 75265
Copyright © 2025, Texas Instruments Incorporated